Interstate Service Guide
for Customers of Detariffed Access Services
within the operating territories

LEGAL NOTICE

The FRONTIER Interstate Service Guide and Pricelist (Guide) applies to the FRONTIER "Detariffed Services" (as defined below) and other telecommunications services that are set forth in this Service Guide.

Detariffed Services, as described in this document, are interstate special access services for which tariffs were withdrawn pursuant to FCC Report and Order, FCC 17-43, released April 28, 2017.

Beginning upon the effectiveness of the withdrawal of Detariffed Service tariffs, Detariffed Services will be subject to and provided pursuant to the rates, terms and conditions of this Guide, unless a separately executed service agreement between you and Frontier provides otherwise.

Prospective customers wishing to purchase services at the rates, terms and conditions in the Guide may do so by initiating orders through the same processes used to order services from FRONTIER's interstate access tariffs.

Service that is ordered without a separately executed service agreement between you and FRONTIER that applies to that order, will also be subject to the FRONTIER Interstate Access Service Agreement at https://wholesale.frontier.com/docs/wholesaledocs/frontier-interstate-access-service-agreement.pdf.

The services described in the Guide may be available through negotiated agreements, which may include rates, terms or conditions more favorable to you than those in the Guide. Prospective customers wishing to purchase Guide services at rates, terms or conditions different from those described in the Guide and the applicable FRONTIER Interstate Access Service Agreement may contact their FRONTIER service representative or go to the FRONTIER website at https://wholesale.frontier.com/wholesale/access-services/interstate-service-guide.

FRONTIER reserves the right to change the rates, terms and conditions in the Guide from time to time. Notification of Guide changes will be made available at the FRONTIER website.

DISCLAIMER: THIS DOCUMENTATION IS FOR INFORMATIONAL PURPOSES ONLY AND DOES NOT OBLIGATE FRONTIER TO PROVIDE SERVICES IN THE MANNER DESCRIBED IN THIS DOCUMENT. FRONTIER RESERVES THE RIGHT AS ITS SOLE OPTION TO MODIFY OR REVISE THE INFORMATION IN THIS DOCUMENT AT ANY TIME WITHOUT PRIOR NOTICE. IN NO EVENT SHALL FRONTIER OR ITS AGENTS, EMPLOYEES, DIRECTORS, OFFICERS, REPRESENTATIVES OR SUPPLIERS BE LIABLE UNDER CONTRACT, WARRANTY, TORT (INCLUDING BUT NOT LIMITED TO NEGLIGENCE OF FRONTIER), OR ANY OTHER LEGAL THEORY, FOR ANY DAMAGES ARISING FROM OR RELATING TO THIS DOCUMENT OR ITS CONTENTS, EVEN IF ADVISED OF THE POSSIBLITY OF SUCH DAMAGES.

© 2022 Frontier Communications Parent, Inc. All rights reserved

Regulations Rates and Charges
applying to the provision of Access Services
within a Local Access and Transport Area (LATA)
for connection to interstate
communications and for interstate intraLATA facilities for customers
within the operating territory of
the Issuing Carriers listed below.

Frontier West Virginia Inc.
in the state of West Virginia
FRONTIER COMMUNICATIONS PARENT, INC
1919 MCKINNEY AVE (T)
DALLAS, TX, 75201 (T)

Frontier of Virginia, Inc.
in the state of Virginia
FRONTIER COMMUNICATIONS PARENT, INC
1919 MCKINNEY AVE (T)
DALLAS, TX, 75201 (T)

Access Services are provided by means of wire, fiber optics, radio or any other suitable technology or a combination thereof.

© 2022 Frontier Communications Parent, Inc. All rights reserved

ACCESS SERVICE

TABLE OF CONTENTS

	Page No.
Table of Contents	1
Concurring Carriers	10
Connecting Carriers	10
Other Participating Carriers	10
Registered Service Marks Registered Trademarks	10
Explanation of Symbols	11
Explanation of Abbreviations	12
Reference to Other Tariffs	14
Reference to Other Publications	14
1. APPLICATION OF GUIDE	1-1
2. GENERAL REGULATIONS	2-1
2.1 Undertaking of the Telephone Company	2-1
2.1.1 Scope	2-1
2.1.2 Limitations	2-1
2.1.3 Liability	2-2
2.1.4 Provision of Services	2-4
2.1.5 Installation and Termination of Services	2-4
2.1.6 Maintenance of Services	2-5
2.1.7 Changes and Substitutions	2-5
2.1.8 Refusal and Discontinuance of Service	2-6
2.1.9 Limitation of Use of Metallic Facilities	2-8
2.1.10 Notification of Service-Affecting Activities	2-8
2.1.11 Coordination with Respect to Network Contingencies	2-8
2.1.12 Provision and Ownership of Telephone Numbers	2-8

© 2022 Frontier Communications Parent, Inc. All rights reserved

ACCESS SERVICE

TABLE OF CONTENTS (Cont'd)

			Page No.
2.	GENERAL REGULATIONS (Cont'd)		
2.2	Use		2-9
	2.2.1	Interference or Impairment	2-9
	2.2.2	Unlawful Use	2-9
2.3	Obligations of the Customer		2-10
	2.3.1	Damages	2-10
	2.3.2	Ownership of Facilities and Theft	2-10
	2.3.3	Equipment Space and Power	2-10
	2.3.4	Availability for Testing	2-11
	2.3.5	Balance	2-11
	2.3.6	Design of Customer Services	2-11
	2.3.7	References to the Telephone Company	2-11
	2.3.8	Claims and Demands for Damages	2-12
	2.3.9	Coordination with Respect to Network Contingencies	2-12
	2.3.10	Jurisdictional Report Requirements	2-13
	2.3.11	Reserved	2-21
	2.3.12	Determination of Jurisdiction of Mixed Use Special Access Service	2-22
2.4	Payment Arrangements		2-23
	2.4.1	Payment of Rates, Charges and Deposits	2-23
	2.4.2	Minimum Periods	2-30
	2.4.3	Cancellation of an Order for Service	2-31
	2.4.4	Re-establishment of Service Following Fire, Flood or Other Occurrence	2-31
	2.4.5	Title or Ownership Rights	2-31
	2.4.6	Ordering, Rating and Billing of Access Services Where More Than One Exchange Telephone Company Is Involved	2-32
2.5	Connections		2-38
	2.5.1	General	2-38
2.6	Definitions		2-39
3.	RESERVED FOR FUTURE USE		3-1
4.	RESERVED FOR FUTURE USE		4-1

© 2022 Frontier Communications Parent, Inc. All rights reserved

ACCESS SERVICE

5. ORDERING OPTIONS FOR ACCESS SERVICE 5-1

5.1 General 5-1
5.1.1 Ordering Conditions 5-1
5.1.2 Provision of Other Services 5-2
5.1.3 Special Construction 5-2

5.2 Access Order 5-3

5.2.1 Access Order Service Date Intervals 5-12
5.2.2 Access Order Modifications 5-14
5.2.3 Cancellation of an Access Order 5-20
5.2.4 Selection of Facilities For Access Orders 5-31
5.2.5 Minimum Period 5-31
5.2.6 Minimum Period Charges 5-32
5.2.7 Discontinuance of Access Service 5-33

6. RESERVED FOR FUTURE USE 6-1

7. SPECIAL ACCESS 7-1

7.1 General 7-1

7.1.1 Channel Types 7-1
7.1.2 Rate Categories 7-4
7.1.3 Service Configurations 7-6
7.1.4 Alternate Use 7-10
7.1.5 Special Facilities Routing 7-10
7.1.6 Design Layout Report 7-10
7.1.7 Acceptance Testing 7-10
7.1.8 Ordering Options and Conditions 7-11
7.1.9 Special Access Surcharge 7-11
7.1.10 Connections With Other Network Services 7-11

7.2 Service Descriptions 7-11

7.2.1 Metallic Service 7-14
7.2.2 Telegraph Grade Service 7-15
7.2.3 Voice Grade Service 7-16
7.2.4 Program Audio Service 7-26
7.2.5 Video Service 7-28
7.2.6 Wideband Analog Service 7-51
7.2.7 Wideband Data Service 7-54
7.2.8 Digital Data Service 7-56
7.2.8.1 Bonded Digital Link Service 7-59
7.2.9 High Capacity Service 7-61
7.2.10 Lightwave Facilities 7-69
7.2.11 LAN Extension Service 7-70
7.2.12 Reconfigure Service 7-77
7.2.13 RESERVED 7-85
7.2.14 Dedicated SONET Services 7-99
7.2.15 Dedicated SONET Entrance Facilities 7-149
7.2.16 Ethernet Private Line 7-159

© 2022 Frontier Communications Parent, Inc. All rights reserved

Page No.

7. SPECIAL ACCESS (Cont'd)

7.3 Channel Interface and Network Channel Codes 7-171

7.3.1 Glossary of Channel Interface Codes and Options 7-171
7.3.2 Impedance 7-176
7.3.3 Digital Hierarchy Channel Interface Codes 7-176
7.3.4 Service Designator/Network Channel Code Conversion Table 7-177
7.3.5 Compatible Channel Interfaces 7-179

7.4 Rate Regulations 7-197

7.4.1 Types of Rates and Charges 7-197
7.4.2 Surcharge for Special Access Service 7-207
7.4.3 Message Station Equipment Recovery Charge 7-210
7.4.4 Minimum Periods 7-211
7.4.5 Moves 7-212
7.4.6 Mileage Measurement 7-213
7.4.7 Facility Hubs 7-214
7.4.8 Shared Use Analog and Digital High Capacity Services 7-216
7.4.9 Reserved for Future Use 7-217
7.4.10 Special Access Rate Exceptions 7-218
7.4.11 WATS Access Line Service 7-218
7.4.12 Reserved 7-219
7.4.13 DS3 High Capacity Services #See footnote on page 7-221 7-221
7.4.14 Shared Network Arrangement 7-226
7.4.15 Lightwave Facilities 7-227
7.4.16 Video Service Arrangements 7-229
7.4.17 Digital Data and DS1 High Capacity Services 7-232
7.4.18 Voice Grade Service Term Pricing Plans 7-242
7.4.19 Commitment Discount Plans 7-246

© 2022 Frontier Communications Parent, Inc. All rights reserved

Page No.

7. SPECIAL ACCESS (Cont'd)

7.5 Rates and Charges 7-247

7.5.1 Metallic Service 7-247
7.5.2 Telegraph Grade Service 7-248
7.5.3 Voice Grade Service 7-250
7.5.3.1 WATS Access Line Service 7-260
7.5.4 Program Audio Service 7-262
7.5.5 Video Service 7-264
7.5.6 Wideband Analog Service 7-296
7.5.7 Wideband Data Service 7-297
7.5.8 Digital Data Service 7-299
7.5.8.1 Bonded Digital Link Service 7-303
7.5.9 High Capacity Service 7-304
7.5.10 Reserved 7-339
7.5.11 Reserved 7-339
7.5.12 Reserved 7-341
7.5.13 Reserved 7-342
7.5.14 Reserved 7-342
7.5.15 Reserved 7-342
7.5.16 Term Pricing Plans (DDS & DS1) 7-343
7.5.17 Reserved 7-363
7.5.18 Reserved 7-364
7.5.19 Reserved 7-378
7.5.20 Dedicated SONET Shared Dual Path 7-379
7.5.21 Dedicated SONET Entrance Facilities 7-383
7.5.22 Dedicated SONET Shared Assurance Network 7-452
7.5.23 LAN Extension Service 7-460
7.5.24 Dedicated SONET Optical Transport Service 7-463
7.5.25 Ethernet Private Line 7-586

7.6 RESERVED FOR FUTURE USE 7-636

8. SONET Special Access Services 8-1

8.1 General 8-1
8.2 Dedicated SONET Broadband Transport (DSBT) 8-5
8.3 Dedicated SONET shared Single Path (DSSSP) 8-59

© 2022 Frontier Communications Parent, Inc. All rights reserved

ACCESS SERVICE

		Page No.
9.	RESERVED FOR FUTURE USE	9-1
10.	RESERVED FOR FUTURE USE	10-1
11.	SPECIAL FACILITIES ROUTING OF ACCESS SERVICES	
11.1	Description of Special Facilities Routing of Access Services	11-1
11.1.1	Diversity	11-1
11.1.2	Avoidance	11-1
11.1.3	Cable-Only Facilities	11-1
11.2	Rates and Charges for Special Facilities Routing of Access Service	11-2
11.2.1	Diversity	11-2
11.2.2	Avoidance	11-2
11.2.3	Diversity and Avoidance Combined	11-2
11.2.4	Cable-Only Facilities	11-3
11.2.5	Individual Case Filings	11-3
12.	SPECIALIZED SERVICE OR ARRANGEMENTS	12-1
12.1	General	12-1
12.2	Move Charges	12-1
12.3	Rates and Charges	12-2

© 2022 Frontier Communications Parent, Inc. All rights reserved

		Page No.
13.	ADDITIONAL ENGINEERING, ADDITIONAL LABOR AND MISCELLANEOUS SERVICES	13-1
13.1	Additional Engineering	13-1
13.1.1	Charges for Additional Engineering	13-1
13.2	Additional Labor	13-2
13.2.1	Overtime Installation	13-2
13.2.2	Overtime Repair	13-2
13.2.3	Standby	13-2
13.2.4	Testing and Maintenance with Other Telephone Companies	13-3
13.2.5	Other Labor	13-3
13.2.6	Charges for Additional Labor	13-3
13.3	Miscellaneous Services	13-5
13.3.1	Reserved for Future Use	13-5
13.3.2	Reserved for Future Use	13-5
13.3.3	RESERVED	13-5
13.3.4	Testing Services	13-6
13.3.5	RESERVED	13-9
13.3.6	Provision of Access Service Billing Information	13-10

© 2022 Frontier Communications Parent, Inc. All rights reserved

TABLE OF CONTENTS (Cont'd)

		Page No.
14.	OPERATING TERRITORY OF THE FRONTIER TELEPHONE COMPANIES	14-1
14.1	Rate Centers	14-1
14.1.1	State of West Virginia	14-1
14.1.2	State of Virginia	14-2
14.2	RESERVED	14-3
14.3	RESERVED	14-7
14.4	Competitive and Non-Competitive Counties	14-14
15.	RESERVED FOR FUTURE USE	15-1
16.	PACKET DATA SERVICES	16-1
16.1	Reserved for Future Use	16-1
16.2	Reserved for Future Use	16-1
16.3	Reserved for Future Use	16-1
16.4	Reserved for Future Use	16-1
16.5	IP (Internet Protocol) Routing Service	16-2
16.5.1	Service Description	16-2
16.5.2	Technical Specifications	16-3
16.5.3	Terms and Conditions	16-4
16.5.4	Rate Regulations	16-5
16.5.5	Rate Categories	16-8
16.5.6	Rates and Charges	16-9
16.6	Reserved for Future Use	16-12
16.7	Channel Extension Service	16-12
16.7.1	Service Description	16-12
16.7.2	Technical Specifications	16-13
16.7.3	Terms and Conditions	16-14
16.7.4	Rate Regulations	16-15
16.7.5	Rate Categories	16-16
16.7.6	Rates and Charges	16-17

© 2022 Frontier Communications Parent, Inc. All rights reserved

ACCESS SERVICE

		Page No.
17.	RESERVED FOR FUTURE USE	17-1
18.	RESERVED FOR FUTURE USE	18-1
19.	RESERVED FOR FUTURE USE	19-1
20.	RESERVED FOR FUTURE USE	20-1
21.	RESERVED FOR FUTURE USE	21-1
22.	RESERVED FOR FUTURE USE	22-1
23.	DEDICATED RING AND OPTICAL SERVICES	23-1
23.1	Dedicated SONET Ring	23-1
24.	RESERVED FOR FUTURE USE	24-1
25.	Discount Plans	25-1
25.1	Commitment Discount Plans	25-1
25.1.1	Availability of a Commitment Discount Plan	25-1
25.1.2	Establishment of a Commitment Discount Plan	25-3
25.1.3	Plan Commitment Levels	25-8
25.1.4	Commitment Periods by Service Type	25-21
25.1.5	Changes to the Discount Percentage	25-22
25.1.6	Changes to the Base Rates/TPP Rates	25-22
25.1.7	Application of the Discount Percentage or TPP Rates	25-23
25.1.8	Commitment Periods	25-27
25.1.9	Termination Liability	25-40
25.1.10	Minimum Period	25-44

© 2022 Frontier Communications Parent, Inc. All rights reserved

ACCESS SERVICE

CONCURRING CARRIERS

NO CONCURRING CARRIERS

CONNECTING CARRIERS

NO CONNECTING CARRIERS

OTHER PARTICIPATING CARRIERS

All Exchange Telephone Companies that have Access Tariffs on file under Part 69 of the Federal Communications Rules and Regulations with which FRONTIER TELEPHONE COMPANIES jointly provide Special Access Service.

REGISTERED SERVICE MARKS

NONE

REGISTERED TRADEMARKS

NONE

© 2022 Frontier Communications Parent, Inc. All rights reserved

EXPLANATION OF ABBREVIATIONS

ac	-	Alternating current
ACNA	-	Access Customer Name Abbreviation
AML	-	Actual Measured Loss
ANI	-	Automatic Number Identification
ANSI	-	American National Standard Institute
AP	-	Program Audio
ARC	-	Access Recovery Charge
AT&T-C	-	AT&T Communications
ATSC	-	Advanced Television Systems Committee
BAN	-	Billing Account Number
BD	-	Business Day
BHMC	-	Busy Hour Minutes of Capacity
BSA	-	Basic Serving Arrangement
BSE	-	Basic Service Element
BVS	-	Billing Validation Service
CAROT	-	Centralized Automatic Reporting on Trunks
CCS	-	Common Channel Signaling
CCSAS	-	Common Channel Signaling Access Service
CFA	-	Connecting Facility Assignment
CEC	-	Cellular Exchange Carrier
CI	-	Channel Interface
CLO	-	Control Link Oscillator
CN	-	Charge Number
CO	-	Central Office
COCTS	-	Central Office Centrex
Cont'd	-	Continued
CPE	-	Customer Provided Equipment
CSM		Customer Service Management Optional Feature
CPN	-	Calling Party Number
CSP	-	Carrier Selection Parameter
Cts	-	Centrex
DA	-	Directory Assistance
dB	-	decibel
dBrnC	-	Decibel Reference Noise C-Message Weighting
dBrnCO	-	Decibel Reference Noise C-Message Weighted 0
dBv	-	Decibel(s) Relative to 1 volt (Reference)
dBv1	-	Decibel(s) Relating to 1 volt (Reference)
dc	-	direct current
DID	-	Direct Inward Dialing
DNAL	-	Dedicated Network Access Link

© 2022 Frontier Communications Parent, Inc. All rights reserved

ACCESS SERVICE

EXPLANATION OF ABBREVIATIONS (Cont'd)

DSR	-	Dedicated SONET Ring
DTM	-	Direct TL1 Monitoring Optional Feature
DVTS	-	Direct Video Transport Service
DWDM	-	Dense Wave Division Multiplexing
EDD	-	Envelope Delay Distortion
ELEPL	-	Equal Level Echo Path Loss
EML	-	Expected Measured Loss
EPL	-	Echo Path Loss
ERL	-	Echo Return Loss
ESCON	-	Enterprise Systems CONnection
ESS	-	Electronic Switching System
ESSX	-	Electronic Switching System Exchange
f	-	frequency
F.C.C.	-	Federal Communications Commission
FICON	-	Fibre CONnection
FID	-	Field Identifier
FX	-	Foreign Exchange
GigE	-	Gigabit Ethernet
HC	-	High Capacity
Hi-Def	-	High Definition
Hz	-	Hertz
IC	-	Interstate Customer
ICB	-	Individual Case Basis
ICL	-	Inserted Connection Loss
IOF	-	Inter-Office Facility
IP	-	Interconnection Point
kbps	-	kilobits per second
kHz	-	kilohertz
LAN	-	Local Area Network
LATA	-	Local Access and Transport Area
LCC	-	Line Cost Charge
LES	-	LAN Extension Service
LIDB	-	Line Information Data Base
Ma	-	milliamperes
Mbps	-	Megabits per second
MHz	-	Megahertz
MMUC	-	Minimum Monthly Usage Charge
MRC	-	Monthly Recurring Charge
MRCCs	-	Maritime Radio Common Carriers
MSA	-	Metropolitan Statistical Area
MT	-	Metallic
MTS	-	Message Telecommunications Service(s)
MTSO	-	Mobile Telephone Switching Office
N-MSA	-	Non-qualifying MSA
NPA	-	Numbering Plan Area
NRC	-	Nonrecurring Charge
NSP	-	Non-Standard Premises
NTS	-	Non-Traffic Sensitive
NXX	-	Three Digit Central Office Code

© 2022 Frontier Communications Parent, Inc. All rights reserved

ACCESS SERVICE

EXPLANATION OF ABBREVIATIONS (Cont'd)

OBSC	-	Out of Band Signaling Connection
OCF	-	Optical Channel Facility
OCF-G	-	Optical Channel Facility - Gigabit
OHF	-	Optical Hubbing Facility
OHI	-	Optical Hubbing Interface
OHS	-	Optical Hubbing Service
OTPL	-	Zero Transmission Level Point
OTS	-	Operator Transfer Service
PBX	-	Private Branch Exchange
PCM	-	Pulse Code Modulation
PI	-	Priority Installation
PLR	-	Private Line Ringdown
POT	-	Point of Termination
PR	-	Priority Restoration
RCCs	-	Radio Common Carriers
rms	-	root-mean-square
RPON	-	Related Purchase Order Number
RSM	-	Remote Switching Modules
RSS	-	Remote Switching Systems
SASG	-	Special Access Service Guarantee
SCVS	-	Serial Component Video Service
SLA	-	Service Level Agreement
SLC	-	Subscriber Line Charge
SMPTE		Society of Motion Picture and Television Engineers
SPOI	-	Signaling Point of Interface
SRL	-	Singing Return Loss
SS7	-	Signaling System 7
SSN	-	Switched Service Network
STP	-	Signal Transfer Point
SWC	-	Serving Wire Center
S56	-	Switched 56 Kilobit Service
TAS	-	Tandem Access Sectorization
TASA	-	Tandem Access Sectorization Area
TES	-	Telephone Exchange Service(s)
TG	-	Telegraph Grade
TL1	-	Transaction Language 1
TLP	-	Transmission Level Point
TSPS	-	Traffic Service Position System
TSP	-	Telecommunications Service Priority
TV	-	Television
TVOC	-	Telephone Company Video Operation Center
UPS	-	Uninterrupted Power Supply
USOC	-	Uniform Service Order Code
VG	-	Voice Grade
V & H	-	Vertical & Horizontal
WA	-	Wideband Analog
WATS	-	Wide Area Telecommunications Service(s)
WCN	-	With Calling Name
WD	-	Wideband Data
WOCN	-	Without Calling Name

© 2022 Frontier Communications Parent, Inc. All rights reserved

ACCESS SERVICE

REFERENCE TO OTHER TARIFFS

Whenever reference is made in this Guide to other tariffs, the reference is to the tariffs in force as of the effective date of this Guide, and to amendments thereto and successive issues thereof.

The following tariff is referenced in this Guide and may be obtained from the National Exchange Carrier Association, 80 South Jefferson Road, Whippany, NJ 07981-1009 or in electronic format on the Internet at www.neca.org.

National Exchange Carrier Association, Inc.
Tariff F.C.C. No. 4

REFERENCE TO OTHER PUBLICATIONS

The following technical publications are referenced in this Guide and may be obtained from Telcordia Technologies, One Telcordia Drive, RRC 1B-180, Piscataway, NJ 08854-4156, (866)672-6997 or on the Internet at www.telcordia.com.

Technical Reference:

FR-64-CORE, Issue 3	Issued: April 2008
GR-20-CORE, Issue 3	Issued: May 2008
GR-54-CORE, Issue 1	Issued: December 1995
GR-63-CORE, Issue 3	Issued: March 2006
GR-253-CORE, Issue 4	Issued: December 2005
GR-334-CORE, Issue 1	Issued: July 1994
GR-337-CORE, Issue 1	Issued: December 1995
GR-338-CORE, Issue 1	Issued: December 1995
GR-342-CORE, Issue 1	Issued: December 1995
GR-394-CORE, Issue 8	Issued: November 2007
GR-436-CORE, Issue 1	Issued: June 1994
GR-499-CORE, Issue 3	Issued: September 2004
GR-905-CORE, Issue 11	Issued: December 2008
GR-954-CORE, Issue 4	Issued: August 2005
GR-1060-CORE, Issue 1	Issued: April 1994
GR-1083-CORE, Issue 5	Issued: September 2004
GR-1110-CORE, Issue 4	Issued: December 2000
GR-1244-CORE, Issue 3	Issued: May 2005
GR-1248-CORE, Issue 4	Issued: November 1998

© 2022 Frontier Communications Parent, Inc. All rights reserved

REFERENCE TO OTHER PUBLICATIONS (Cont'd)

Technical Reference: (Cont'd)

GR-1312-CORE, Issue 3	Issued: April 1999
GR-1374-CORE, Issue 1	Issued: December 1994
GR-2918-CORE, Issue 6	Issued: January 2003
GR-2936-CORE, Issue 1	Issued: December 1997
GR-2979-CORE, Issue 5	Issued: March 2005
PUB 41004	Issued: October 1973
PUB 62310	Issued: September 1983
SR-3330, Issue 2	Issued: April 1997
SR-4274, Issue 1	Issued: April 1997
SR-INS-001532, Issue 1	Issued: July 1991
Video Distribution Technology	
SR-NPL-001434, Issue 1	Issued: January 1990
Cable TV Signal Distribution	
SR-NWT-001851, Issue 1	Issued: December 1990
SR-STS-000320	Issued: August 1990
SR-TAP-000191, Issue 2	Issued: December 1998
ST-TEC-000053, Issue 1	Issued: August 1989
Telecommunications Transmission Engineering	
Volume 3 - Networks and Services (Chapters 6 and 7)	
TR-NPL-000157, Issue 1	Issued: April 1986
TR-NPL-000336, Issue 1	Issued: October 1987
TR-NPL-000339	Issued: October 1987
TR-NPL-000340	Issued: October 1987
TR-NWT-000335, Issue 3	Issued: May 1993
TR-NWT-000341, Issue 2	Issued: February 1993
TR-NWT-001112, Issue 1	Issued: June 1993
TR-TSV-000772, Issue 1	Issued: May 1991
TR-TSV-000773, Issue 1	Issued: June 1991
TR-TSV-001239, Issue 1	Issued: December 1993
TR-TSV-061370, Issue 1	Issued: May 1998
TR-TSY-000366, Issue 2	Issued: March 1988

© 2022 Frontier Communications Parent, Inc. All rights reserved

ACCESS SERVICE

REFERENCE TO OTHER PUBLICATIONS (Cont'd)

The following technical publications are referenced in this Guide and may be obtained from Telcordia Routing Administration, 8 Corporate Place PYA 3N-141, Piscataway, NJ 08854-4156, 1(866) 672-4156.

Technical Reference:

The Local Exchange Routing Guide (LERG), Issued: August 1, 2009, and as issued from time to time

The following publication, referenced in this Guide, may be obtained from ATM Forum, 2570 West El Camino Real, Suite 304, Mountain View CA 94040 or on the Internet at www.atmforum.com.

ATM Forum, ATM User Network Interface Specifications, Version 3.0
af-uni-0010.001
Issued: September 1993

ATM Forum, ATM User Network Interface Specifications, Version 3.1
af-uni-0010.002
Issued: September 1994

ATM Forum, Interim Inter-switch Signaling Protocol, Version 1.0
af-pnni-0026.000
Issued: December 1994

The following publications are referenced in this Guide and may be obtained from the Government Printing Office, Superintendent of Documents, Document Control Branch, 941 N. Capitol St., N.E., Washington, D.C. 20401.

Telecommunications Service Priority (TSP) System for National
Security Emergency Preparedness (NSEP) Service Vendor Handbook,
National Communications System (NCS) H 3-1-2
Issued: December 2000

Telecommunication Service Priority (TSP) System for National
Security Emergency Preparedness (NSEP) Service User Manual,
National Communications System (NCS) M 3-1-1
Issued: May 2000

© 2022 Frontier Communications Parent, Inc. All rights reserved

ACCESS SERVICE

REFERENCE TO OTHER PUBLICATIONS (Cont'd)

The following technical publication is referenced in this Guide and may be obtained from the National Exchange Carrier Association, Inc., 80 S. Jefferson Road, Whippany, NJ 07981-1009 or on the Internet at www.neca.org.

PUB AS No. 1, Issue II
Issued: May 1984

The following publications, referenced in this Guide, may be obtained from the International Telecommunications Union (ITU), Place des Nations, CH-1211, Geneva 20, Switzerland or on the Internet at www.itu.int.net.

ITU-T G.707/Y.1322	Issued: January 2007
ITU-T G.959.1	Issued: December 2003
ITU-T G.692	Issued: October 1998 and Amendment dated January 2005

ITU-T H.320 series Standards for Audio Visual Communications over Narrowband Digital Networks Issued: March 2004

© 2022 Frontier Communications Parent, Inc. All rights reserved

ACCESS SERVICE

REFERENCE TO OTHER PUBLICATIONS (Cont'd)

The following publications are referenced in this Guide and may be obtained from Alliance for Telecommunications Industry Solutions (ATIS), 1200 G Street, NW, Suite 500, Washington, DC 20005 or on the Internet at www.atis.org/obf.

Multiple Exchange Carrier Access Billing Guidelines (MECAB)
ATIS/OBF-MECAB 009, Issue 9 Issued: January 2007

Multiple Exchange Carrier Ordering and Design Guidelines (MECOD)
ATIS-0404120-0007, Issue 7 Issued: April 2009

The following publication, referenced in this Guide, may be obtained from National Fire Protection Association, 1 Battery March Park, Quincy, MA 02169-7471, or in electronic format on the Internet at www.nfpa.org.

National Electrical Code, NFPA 70 2008 Edition, Issued: August 2008

The following publication is referenced in this Guide and may be obtained from the United States Department of Labor, Publication Distribution, 200 Constitution Avenue, N.W., Washington, D.C. 20210 or on the Internet at www.osha.gov.

Occupational Safety and Health Act, Issued: December 1970 and as amended through January 2004

The following publications are referenced in this Guide and may be obtained from Collocated Interconnection Major Project Team Coordinator:

- 1500 MacCorkle Avenue Rm 222, Charleston, WV 25396

Information Pub. IP 72202, Issue 3	Issued: December 2008
Information Pub. IP 72013, Issue 6	Issued: April 2008
Cable Splicing Handbook	Issued: December 1991
Cable Placing Handbook	Issued: December 1991
Cable Maintenance Handbook	Issued: December 1991
General Information Tools & Safety Manual	Issued: December 1992
Building Owners and Managers Association International Standards (BOMA)	Issued: December 1992

© 2022 Frontier Communications Parent, Inc. All rights reserved

REFERENCE TO OTHER PUBLICATIONS (Cont'd)

The following publications are referenced in this Guide and may be obtained from the American National Standards Institute (ANSI), 25 West 43rd Street, 4th Floor, New York, New York 10036, or on the Internet at www.ansi.org.

ANSI T1.101	Issued: 1994
ANSI T1.102-1993 (R2005)	Issued: 2005
ANSI T1.102.01-1996 (R2001)	Issued: 2001
ANSI T1.105.01-2000 (R2005)	Issued: 2005
ANSI T1.107-2002 (R2006)	Issued: 2006
ANSI T1.403-1999 (R2007)	Issued: 2007
ANSI T1.404-2002 (R2006)	Issued: 2006
ANSI T1.606-1990	Issued: 1990
ANSI T1.606, Addendum 1	Issued: 1991
ANSI T1.606a-1992	Issued: 1992
ANSI T1.606b-1993	Issued: 1993
ATIS T1.617-1991	Issued: 1992
ANSI INCITS 139-1987 (R2002)	Issued: 2002
ANSI INCITS 148-1988 (R2004)	Issued: 2004
ANSI INCITS 166-1989 (R2005)	Issued: 2005
ANSI INCITS 184-1993 (R2003)	Issued: 2003
ANSI INCITS 229-1994 (R2004)	Issued: 2004
ANSI INCITS 296-1997 (R2007)	Issued: 2007
ANSI INCITS 303-1998 (R2003)	Issued: 2003

The following publications are referenced in this Guide and may be obtained from Institute of Electrical and Electronics Engineers, Inc., IEEE Standards Association, 445 Hoes Lane, P.O. Box 1331, Piscataway, NJ 08855-1331, or in electronic format on the Internet at www.ieee.org.

IEEE C95.1-2005	Issued: 2005
IEEE 802.3-2005/Cor2/D2.0-2007	Issued: 2007
IEEE 802.3u-1995	Issued: 1995
IEEE 802.3z-1998	Issued: 1998
IEEE 802.1Q-2005/Cor1-2008	Issued: 2008
IEEE 802.3ae-2002	Issued: 2002

© 2022 Frontier Communications Parent, Inc. All rights reserved

REFERENCE TO OTHER PUBLICATIONS (Cont'd)

The following publications are referenced in this Guide and may be obtained from the Society of Motion Picture and Television Engineers (SMPTE), 3 Barker Avenue, 5th Floor, White Plains, NY 10601, Telephone No. 914 761-1100, or on the Internet at www.smpte.org.

SMPTE 0259M-2008	Issued: 2008
SMPTE 0292M-2001	Issued: 2001
SMPTE 0310M-2004	Issued: 2004

The following publication, referenced in this Guide, may be obtained from the Frontier Carrier Services, 1919 McKinney Ave, Dallas, TX 75201. (T)

Technical Memorandum for Incidental InterLATA Call Management Signaling Service associated with the Verizon FCC Short Term Notice of Network Change dated March 2007 Issued: March 2007

The following publication is referenced in this Guide and may be obtained from the Internet Engineering Task Force (IETF) at IETF Secretariat, c/o Association Management Solutions, LLC (AMS), 48377 Fremont Blvd., Suite 117, Fremont, California 94538, or on the Internet at www.ietf.org.

STD 0001: Internet Official Protocol Standards, J Postel, Editor, Issued: May 2008.
RFC 2138, Remote Authentication Dial-In User Service (RADIUS); C Rigney, A. Rubens, W. Simpson, S. Willens, Issued: April 1997.

© 2022 Frontier Communications Parent, Inc. All rights reserved

REFERENCE TO OTHER PUBLICATIONS (Cont'd)

The following publications referenced in this Guide may be obtained from IBM North America, 590 Madison Avenue, New York, NY 10022; 1-800-426-4968 or on the Internet at www.ibm.com/us. Note: ESCON® is a registered trademark of the International Business Machines (IBM) Corporation.

Coupling Facility Channel Physical Layer (Sixth Edition)
SA23-0395-05 Issued: July 2008
Enterprise Systems Architecture/390 ESCON I/O Interface, Physical Layer (Seventh Edition)
SA23-0394-06 Issued: July 2008
ESA/390 ESCON I/O Interface
SA22-7202-02 Issued: June 2002
ESCON® Introduction
GA23-0383-01 Issued: July 2002
S/390 Time Management and IBM 9037 Sysplex Timer
SG24-2070-00 Issued: May 1999
Planning Fiber Optic Channel Links (Thirteenth Edition)
GA23-0367-12 Issued: July 2009
OS/390 Parallel Sysplex Configuration Volume 2: Cookbook
SG24-5638-00 Issued: August 2000

The following publications, referenced in this Guide, may be obtained from the Advanced Television Systems Committee (ATSC), 1750 K Street NW, Suite 1200, Washington, DC 20006 or on the Internet at www.atsc.org.

ATSC Standard A/53, Digital Television Standard
Issued: January 2007
ATSC Document A/54A (includes Corrigendum No. 1),
Guide to the Use of ATSC Digital Television Standard
Issued: December 2003, Corrigendum No. 1 Issued December 2006

The Collocation Space Summary, which is referenced in this Guide, may be obtained from the Telephone Company's Internet website at http://carrier.frontiercorp.com/crtf/carrier/.

The following publication referenced in this Guide may be obtained from Nortel Networks, Inc., 4001 East Chapel Hill, Research Triangle Park, Raleigh, NC 27709, (919)991-8679 or on the Internet at www.nortel.com.

Nortel Document No. Q214-1
Issued: September 2000

© 2022 Frontier Communications Parent, Inc. All rights reserved

ACCESS SERVICE

1. **Application of Guide**

1.1 This Guide contains regulations, rates and charges applicable to the provision of Special Access Services, and other miscellaneous services, hereinafter referred to collectively as service(s), provided to customers by Frontier West Virginia, Inc., hereinafter referred to as the Telephone Company.

1.2 The provision of such services by the Telephone Company as set forth in this Guide does not constitute a joint undertaking with the customer for the furnishing of any service.

1.3 The operating territory of the Telephone Company is the locations set forth in 14. following for the states of West Virginia, and Virginia.

© 2022 Frontier Communications Parent, Inc. All rights reserved

2. General Regulations

2.1 Undertaking of the Telephone Company

2.1.1 Scope

(A) The Telephone Company does not undertake to transmit messages under this Guide.

(B) The Telephone Company shall be responsible only for the installation, operation and maintenance of the services it provides.

(C) The Telephone Company will, for maintenance purposes, test its services only to the extent necessary to detect and/or clear troubles.

Services are provided 24 hours daily, seven days per week, except as set forth in other applicable sections of this Guide.

(E) The Telephone Company does not warrant that its facilities and services meet standards other than those set forth in this Guide.

2.1.2 Limitations

(A) The customer may not assign or transfer the use of services provided under this Guide; however, where there is no interruption of use or relocation of the services, such assignment or transfer may be made to:

(1) another customer, whether an individual, partnership, association or corporation, provided the assignee or transferee assumes all outstanding indebtedness for such services, and the unexpired portion of the minimum period and the termination liability applicable to such services, if any; or

(2) a court-appointed receiver, trustee or other person acting pursuant to law in bankruptcy, receivership, reorganization, insolvency, liquidation or other similar proceedings, provided the assignee or transferee assumes the unexpired portion of the minimum period and the termination liability applicable to such services, if any.

In all cases of assignment or transfer, the written acknowledgement of the Telephone Company is required prior to such assignment or transfer which acknowledgement shall be made within 15 days from the receipt of notification. All regulations and conditions contained in this Guide shall apply to such assignee or transferee.

© 2022 Frontier Communications Parent, Inc. All rights reserved

2. General Regulations (Cont'd)

2.1 Undertaking of the Telephone Company (Cont'd)

2.1.2 Limitations (Cont'd)

(A) (Cont'd)

The assignment or transfer of services does not relieve or discharge the assignor or transferor from remaining jointly or severally liable with the assignee or transferee for any obligations existing at the time of the assignment or transfer.

(B) The regulations for the installation and restoration of Telecommunications Service Priority (TSP) System Services shall be subject to Part 64.401, Appendix A, of the Federal Communications Commissions Rules and Section 10, following.

(C) Subject to compliance with the rules mentioned in (B) preceding, the services offered herein will be provided to customers on a first-come, first-served basis, except as provided in following.

Where a shortage of service exists in conjunction with initial offerings of equal access (Trunkside BSA-101XXXX Option, FGD) available services will be allocated in an equitable manner (percent of available services to percent of requested services).

2.1.3 Liability

(A) The Telephone Company's liability, if any, for its willful misconduct is not limited by this Guide. With respect to any other claim or suit, by a customer, or by any others, for damages associated with the installation, provision, preemption, termination, maintenance, repair or restoration of service, and subject to the provisions of (B) through (H) following, the Telephone Company's liability, if any, shall not exceed an amount equal to the proportionate charge for the service for the period during which the service was affected. This liability for damages shall be in addition to any amounts that may otherwise be due the customer under this Guide as a Credit Allowance for a Service Interruption.

(B) The Telephone Company shall not be liable for any act or omission of any other carrier or customer providing a portion of a service, nor shall the Telephone Company for its own act or omission hold liable any other carrier or customer providing a portion of a service.

© 2022 Frontier Communications Parent, Inc. All rights reserved

2. General Regulations (Cont'd)

2.1 Undertaking of the Telephone Company (Cont'd)

2.1.3 Liability (Cont'd)

(C) The Telephone Company shall not be liable for any act or omission concerning the implementation of Presubscription as set forth in 4.2 following unless it is due to the negligence of the Telephone Company.

The Telephone Company is not liable for damages to the customer premises resulting from the furnishing of a service, including the installation and removal of equipment and associated wiring, unless the damage is caused by the Telephone Company's negligence.

(E) The Telephone Company shall be indemnified, defended and held harmless by the end user against any claim, loss or damage arising from the end user's use of services offered under this Guide, involving:

(1) Claims for libel, slander, invasion of privacy, or infringement of copyright arising from the end user's own communications;

(2) Claims for patent infringement arising from the end user's acts combining or using the service furnished by the Telephone Company in connection with facilities or equipment furnished by the end user or IC or;

(3) All other claims arising out of any act or omission of the end user in the course of using services provided pursuant to this Guide.

(F) The Telephone Company shall be indemnified, defended and held harmless by the IC against any claim, loss or damage arising from the IC's use of services offered under this Guide, involving:

(1) Claims for libel, slander, invasion of privacy, or infringement of copyright arising from the IC's own communications;

(2) Claims for patent infringement arising from the IC's acts combining or using the service furnished by the Telephone Company in connection with facilities or equipment furnished by the end user or IC or;

(3) All other claims arising out of any act or omission of the IC in the course of using services provided pursuant to this Guide.

© 2022 Frontier Communications Parent, Inc. All rights reserved

2. General Regulations (Cont'd)

2.1 Undertaking of the Telephone Company (Cont'd)

2.1.3 Liability (Cont'd)

(G) The Telephone Company does not guarantee or make any warranty with respect to its services when used in an explosive atmosphere. The Telephone Company shall be indemnified, defended and held harmless by the customer from any and all claims by any person relating to such customer's use of services so provided.

(H) No license under patents (other than the limited license to use) is granted by the Telephone Company or shall be implied or arise by estoppel, with respect to any service offered under this Guide. The Telephone Company will defend the customer against claims of patent infringement arising solely from the use by the customer of services offered under this Guide and will indemnify such customer for any damages awarded based solely on such claims.

(I) The Telephone Company's failure to provide or maintain services under this Guide shall be excused by labor difficulties, governmental orders, civil commotions, criminal actions taken against the Telephone Company, acts of God and other circumstances beyond the Telephone Company's reasonable control, subject to the Credit Allowance for Service Interruptions as set forth in Section 2.7.1(A) and When a Credit Allowance Does Not Apply as set forth in Section 2.7.4 following.

2.1.4 Provision of Services

The Telephone Company, to the extent that such services are or can be made available with reasonable effort, and after provision has been made for the Telephone Company's Telephone Exchange Services, will provide to the customer upon reasonable notice services offered in other applicable sections of this Guide at rates and charges specified therein.

2.1.5 Installation and Termination of Services

The Access Services provided under this Guide (A) will include any entrance cable or drop wiring and wire or intrabuilding cable to that point where provision is made for termination of the Telephone Company's outside distribution network facilities at a suitable location of mutual agreement inside a customer-designated premises and (B) will be installed by the Telephone Company to such Point of Termination. Access Service has only one Point of Termination per customer premises. Any additional terminations beyond such Point of Termination is the sole responsibility of the customer. The Point of Termination is an inherent part of Special Access Services, therefore, the preceding does not preclude the customer's ability to have the Point of Termination moved as set forth in 7.4.5 following for Special Access Services.

© 2022 Frontier Communications Parent, Inc. All rights reserved

2. General Regulations (Cont'd)

2.1 Undertaking of the Telephone Company (Cont'd)

2.1.6 Maintenance of Services

The services provided under this Guide shall be maintained by the Telephone Company. The customer or others may not rearrange, move, disconnect, remove or attempt to repair any facilities provided by the Telephone Company, other than by connection or disconnection to any interface means used, except with the written consent of the Telephone Company.

2.1.7 Changes and Substitutions

Except as provided for equipment and systems subject to FCC Part 68 Regulations at 47 C.F.R. Section 68.110(o), the Telephone Company may, where such action is reasonably required in the operation of its business, (A) substitute, change or rearrange any facilities used in providing service under this Guide, including but not limited to, (1) substitution of different metallic facilities, (2) substitution of carrier or derived facilities for metallic facilities used to provide other than metallic facilities and (3) substitution of metallic facilities for carrier or derived facilities used to provide other than metallic facilities, (B) change minimum protection criteria, (C) change operating or maintenance characteristics of facilities or change operations or procedures of the Telephone Company. In case of any such substitution, change or rearrangement, the transmission parameters will be within the range as set forth in 6. and 7. following. The Telephone Company shall not be responsible if any such substitution, change or rearrangement renders any customer furnished services obsolete or requires modification or alteration thereof or otherwise affects their use or performance. If such substitution, change or rearrangement materially affects the operating characteristics of the facility, the Telephone Company will provide reasonable notification to the customer in writing. Reasonable time will be allowed for any redesign and implementation required by the change in operating characteristics. The Telephone Company will work cooperatively with the customer to determine reasonable notification requirements.

© 2022 Frontier Communications Parent, Inc. All rights reserved

2. General Regulations (Cont'd)

2.1 Undertaking of the Telephone Company (Cont'd)

2.1.8 Refusal and Discontinuance of Service

(A) Unless the provisions of 2.2.1(B) or 2.5 following apply, if a customer fails to comply with 2.1.6 preceding or 2.2.2, 2.3.1, 2.3.4, 2.3.5 or 2.4 following, including any payments to be made by it on the dates and times herein specified, the Telephone Company may, on thirty (30) calendar days written notice by Certified U.S. Mail or Overnight Delivery to the person designated by that customer to receive such notices of noncompliance, refuse additional applications for service, including the provision of Physically or Virtually Collocated Interconnection, and/or refuse to complete any pending orders for service, including the provision of Physically or Virtually Collocated Interconnection, by the noncomplying customer at any time thereafter.

(B) Unless the provisions of 2.2.1(B) or 2.5 following apply, if a customer fails to comply with 2.1.6 preceding or 2.2.2, 2.3.1, 2.3.4, 2.3.5 or 2.4 following, including any payments to be made by it on the dates and times herein specified, the Telephone Company may, on thirty (30) calendar days written notice by Certified U.S. Mail or Overnight Delivery to the person designated by that customer to receive such notices of noncompliance, discontinue the provision of the services, including the provision of Physically or Virtually Collocated Interconnection, to the noncomplying customer at any time thereafter. In the case of such discontinuance, all applicable charges, including termination charges, shall become due.

(C) In addition to and not in limitation of the provisions of 2.1.8(A) and 2.1.8(B) preceding, unless the provisions of 2.2.1(B) or 2.5 following apply, if a customer fails to comply with 2.4.1(B)(3) or with 2.4.1(A) following, including any payments to be made by it on the dates and times herein specified, the Telephone Company may take the actions specified in 2.1.8(A) and 2.1.8(B) with regard to services provided hereunder to that customer on fifteen (15) calendar days written notice, such notice period to start the day after the notice is sent by Overnight Delivery, if the customer has not complied with respect to amounts due in a subject bill and either

(1) the Telephone Company has sent the subject bill to the customer within seven (7) business days of the bill date; or

(2) the Telephone Company has sent the subject bill to the customer more than thirty (30) calendar days before notice under this section is given.

© 2022 Frontier Communications Parent, Inc. All rights reserved

2. General Regulations (Cont'd)

2.1 Undertaking of the Telephone Company (Cont'd)

2.1.8 Refusal and Discontinuance of Service (Cont'd)

(C) (Cont'd)

In all other cases, the Telephone Company will give thirty (30) calendar days written notice pursuant to 2.1.8(A) or 2.1.8(B). The Telephone Company will maintain records sufficient to validate the date upon which a bill was sent to a customer. Action will not be taken as specified in 2.1.8(A) or 2.1.8(B) with regard to the subject bill if the customer cures the noncompliance prior to the expiration of the fifteen (15) or thirty (30) day notice period, as applicable.

If the Telephone Company provided notice pursuant to 2.1.8(A), (B), or (C) above, does not refuse additional applications for service, or discontinue the provision of the services on the date specified, and the customer's noncompliance continues, nothing contained herein shall preclude the Telephone Company's right to refuse additional applications for service or to discontinue the provision of the services, including the provision of Physically or Virtually Collocated Interconnection, to the noncomplying customer without further notice.

(E) If notice is given by Overnight Delivery under this section, it shall be performed by a reputable overnight delivery service such as, or comparable to, the U.S. Postal Service Express Mail, United Parcel Service, or Federal Express.

(F) The provisions of 2.1.8(A), (B), and (C) above shall not apply to charges that a customer does not pay based on submission of a good faith dispute pursuant to 2.4.1(B)(3)(c)(1) following.

(G) When access service is provided by more than one Telephone Company, the companies involved in providing the joint service may individually or collectively deny service to a customer for nonpayment. Where the Telephone Company(s) affected by the nonpayment is incapable of effecting discontinuance of service without cooperation from the other joint providers of Switched Access Service, such other Telephone Company(s) will, if technically feasible, assist in denying the joint service to the customer. Service denial for such joint service will only include calls originating or terminating within, or transiting, the operating territory of the Telephone Companies initiating the service denial for nonpayment. When more than one of the joint providers must deny service to effectuate termination for nonpayment, in cases where a conflict exists in the applicable tariff provisions, the tariff regulations of the end office Telephone Company shall apply for joint service discontinuance.

© 2022 Frontier Communications Parent, Inc. All rights reserved

2. General Regulations (Cont'd)

2.1 Undertaking of the Telephone Company (Cont'd)

2.1.9 Limitation of Use of Metallic Facilities

Signals applied to a metallic facility shall conform to the limitations set forth in Technical Reference Publication AS No. 1. In the case of application of dc telegraph signaling systems, the customer shall be responsible, at its expense, for the provision of current limiting devices to protect the Telephone Company facilities from excessive current due to abnormal conditions and for the provision of noise mitigation networks when required to reduce excessive noise.

2.1.10 Notification of Service-Affecting Activities

The Telephone Company will provide the customer reasonable notification of service-affecting activities that may occur in normal operation of its business. Such activities may include, but are not limited to, equipment or facilities additions, removals or rearrangements, routine preventative maintenance and major switching machine change-out. Generally, such activities are not individual customer service specific, they affect many customer services. No specific advance notification period is applicable to all service activities. The Telephone Company will work cooperatively with the customer to determine reasonable notification requirements.

2.1.11 Coordination with Respect to Network Contingencies

The Telephone Company intends to work cooperatively with the customer to develop network contingency plans in order to maintain maximum network capability following natural or man-made disasters which affect telecommunications services.

2.1.12 Provision and Ownership of Telephone Numbers

The Telephone Company reserves the reasonable right to assign, designate or change telephone numbers, any other call number designations associated with Access Services, or the Telephone Company serving central office prefixes associated with such numbers, when necessary in the conduct of its business. Should it become necessary to make a change in such number(s), the Telephone Company will furnish to the customer six months notice, by Certified U.S. Mail, of the effective date and an explanation of the reason(s) for such change(s).

© 2022 Frontier Communications Parent, Inc. All rights reserved

2. General Regulations (Cont'd)

2.2 Use

2.2.1 Interference or Impairment

(A) The characteristics and methods of operation of any circuits, facilities or equipment provided by other than the Telephone Company and associated with the facilities utilized to provide services under this Guide shall not interfere with or impair service over any facilities of the Telephone Company, its affiliated companies, or its connecting and concurring carriers involved in its services, cause damage to their plant, impair the privacy of any communications carried over their facilities or create hazards to the employees of any of them or the public.

(B) Except as provided for equipment or systems subject to the FCC Part 68 Rules in 47 C.F.R., Section 68.108, if such characteristics or methods of operation are not in accordance with (A) preceding, the Telephone Company will, where practicable, notify the customer that temporary discontinuance of the use of a service may be required; however, where prior notice is not practicable, nothing contained herein shall be deemed to preclude the Telephone Company's right to temporarily discontinue forthwith the use of a service if such action is reasonable under the circumstances. In case of such temporary discontinuance, the customer will be promptly notified and afforded the opportunity to correct the condition which gave rise to the temporary discontinuance. During such period of temporary discontinuance, credit allowances as set forth in Section 2.7 following are not applicable.

2.2.2 Unlawful Use

The service provided under this Guide shall not be used for an unlawful purpose.

2.2.3 Commingling

Except as provided in Section 51.318 of the Federal Communications Commission's rules, telecommunications carriers who obtain unbundled network elements or combinations of unbundled network elements pursuant to a Statement of Generally Available Terms, under Section 252 of the Act, or pursuant to an interconnection agreement with the Telephone Company, may connect, combine, or otherwise attach such unbundled network elements or combinations of unbundled network elements to access services purchased under this Guide except to the extent such agreement (1) expressly prohibits such commingling; or (2) does not address commingling and the requesting carrier has not negotiated an interconnection agreement (or amendment) expressly permitting such commingling. The rates, terms, and conditions of this Guide will apply to the access services that are commingled. Unbundled network elements or combinations of unbundled network elements that are commingled with access services do not constitute a shared use arrangement as set forth in this Guide, and are therefore not eligible for adjustment of charges under such provisions.

© 2022 Frontier Communications Parent, Inc. All rights reserved

2. General Regulations (Cont'd)

2.3 Obligations of the Customer

2.3.1 Damages

The customer shall reimburse the Telephone Company for damages to Telephone Company facilities utilized to provide services under this Guide caused by the negligence or willful act of the customer, or resulting from the customer's improper use of the Telephone Company facilities, or due to malfunction of any facilities or equipment provided by other than the Telephone Company. Nothing in the foregoing provision shall be interpreted to hold one customer liable for another customer's actions. The Telephone Company will, upon reimbursement for damages, cooperate with the customer in prosecuting a claim against the person causing such damage and the customer shall be subrogated to the right of recovery by the Telephone Company for the damages to the extent of such payment.

2.3.2 Ownership of Facilities and Theft

Facilities utilized by the Telephone Company to provide service under the provisions of this Guide shall remain the property of the Telephone Company. Such facilities shall be returned to the Telephone Company by the customer, whenever requested, within a reasonable period following the request in as good condition as reasonable wear will permit.

2.3.3 Equipment Space and Power

The customer shall furnish or arrange to have furnished to the Telephone Company, at no charge, equipment space and electrical power required by the Telephone Company to provide services under this Guide at the points of termination of such services. The selection of ac or dc power shall be mutually agreed to by the customer and the Telephone Company. The customer shall also make necessary arrangements in order that the Telephone Company will have access to such spaces at reasonable times for installing, testing, repairing or removing Telephone Company services.

© 2022 Frontier Communications Parent, Inc. All rights reserved

2. General Regulations (Cont'd)

2.3 Obligations of the Customer (Cont'd)

2.3.4 Availability for Testing

The services provided under this Guide shall be available to the Telephone Company at times mutually agreed upon in order to permit the Telephone Company to make tests and adjustments appropriate for maintaining the services in satisfactory operating condition. Such tests and adjustments shall be completed within a reasonable time. No credit will be allowed for any interruptions involved during such tests and adjustments.

2.3.5 Balance

All signals for transmission over the services provided under this Guide shall be delivered by the customer balanced to ground except for ground start, duplex (DX) and McCulloh-Loop (Alarm System) type signaling and dc telegraph transmission at speeds of 75 baud or less.

2.3.6 Design of Customer Services

Subject to the provisions of 2.1.7 preceding, the customer shall be solely responsible, at its own expense, for the overall design of its services and for any redesigning or rearrangement of its services which may be required because of changes in facilities, operations or procedures of the Telephone Company, minimum protection criteria or operating or maintenance characteristics of the facilities.

2.3.7 References to the Telephone Company

The customer may advise End Users that certain services are provided by the Telephone Company in connection with the service the customer furnishes to End Users; however, the customer shall not represent that the Telephone Company jointly participates in the customer's services.

© 2022 Frontier Communications Parent, Inc. All rights reserved

2. General Regulations (Cont'd)

2.3 Obligations of the Customer (Cont'd)

2.3.8 Claims and Demands for Damages

(A) With respect to claims of patent infringement made by third persons, the customer shall defend, indemnify, protect and save harmless the Telephone Company from and against all claims arising out of the combining with, or use in connection with, the services provided under this Guide, any circuit, apparatus, system or method provided by the customer.

(B) The customer shall defend, indemnify and save harmless the Telephone Company from and against any suits, claims, losses or damages, including punitive damages, attorney fees and court costs by third persons arising out of the construction, installation, operation, maintenance, or removal of the customer's circuits, facilities, or equipment connected to the Telephone Company's services provided under this Guide, including, without limitation, Workmen's Compensation claims, actions for infringement of copyright and/or unauthorized use of program material, libel and slander actions based on the content of communications transmitted over the customer's circuits, facilities or equipment, and proceedings to recover taxes, fines, or penalties for failure of the customer to obtain or maintain in effect any necessary certificates, permits, licenses, or other authority to acquire or operate the services provided under this Guide; provided, however, the foregoing indemnification shall not apply to suits, claims, and demands to recover damages for damage to property, death, or personal injury unless such suits, claims or demands are based on the tortious conduct of the customer, its officers, agents or employees.

(C) The customer shall defend, indemnify and save harmless the Telephone Company from and against any suits, claims, losses or damages, including punitive damages, attorney fees and court costs by the customer or third parties arising out of any act or omission of the customer in the course of using service provided under this Guide.

2.3.9 Coordination with Respect to Network Contingencies

The customer shall, in cooperation with the Telephone Company, coordinate in planning the actions to be taken to maintain maximum network capability following natural or man-made disasters which affect telecommunications services.

© 2022 Frontier Communications Parent, Inc. All rights reserved

2. General Regulations (Cont'd)

2.3 Obligations of the Customer (Cont'd)

2.3.10 Jurisdictional Report Requirements

© 2022 Frontier Communications Parent, Inc. All rights reserved

2. General Regulations (Cont'd)

2.3 Obligations of the Customer (Cont'd)

2.3.10 Jurisdictional Report Requirements (Cont'd)

© 2022 Frontier Communications Parent, Inc. All rights reserved

2. General Regulations (Cont'd)

2.3 Obligations of the Customer (Cont'd)

2.3.10 Jurisdictional Report Requirements (Cont'd)

© 2022 Frontier Communications Parent, Inc. All rights reserved

2. General Regulations (Cont'd)

2.3 Obligations of the Customer (Cont'd)

2.3.10 Jurisdictional Report Requirements (Cont'd)

© 2022 Frontier Communications Parent, Inc. All rights reserved

2. General Regulations (Cont'd)

2.3 Obligations of the Customer (Cont'd)

2.3.10 Jurisdictional Report Requirements (Cont'd)

© 2022 Frontier Communications Parent, Inc. All rights reserved

2. General Regulations (Cont'd)

2.3 Obligations of the Customer (Cont'd)

2.3.10 Jurisdictional Report Requirements (Cont'd)

© 2022 Frontier Communications Parent, Inc. All rights reserved

2. General Regulations (Cont'd)

2.3 Obligations of the Customer (Cont'd)

2.3.10 Jurisdictional Report Requirements (Cont'd)

Mixed Use Special Access Services

A Mixed Use Special Access Service is a Special Access Service (line) which carries both intrastate and interstate traffic.

(1) When the customer orders a Mixed Use Special Access Service (line) which is entirely or partially physically intrastate, the customer must certify to the Telephone Company whether the physically intrastate portion of the service (line) is considered to be jurisdictionally intrastate or jurisdictionally interstate as follows:

(a) If the customer estimates that the interstate Special Access traffic on the service (line) involved constitutes ten percent or less of the total traffic on the service (line), the service (line) is considered to be jurisdictionally intrastate and will be provided in accordance with the applicable rates and regulations of the appropriate intrastate tariff.

(b) If the customer estimates that the interstate Special Access traffic on the service (line) involved constitutes more that ten percent of the total traffic on the service (line), the service (line) is considered to be jurisdictionally interstate and will be provided in accordance with the applicable rates and regulations in this Guide.

(2) The customer may, at any time, update the jurisdictional report. The customer shall forward to the Telephone Company a revised report showing any change in jurisdiction. The revised report will serve as the basis for future billing and will be effective on the next business day following the7-333 receipt of the revised report. No back billing will be done based on the report.

(3) Existing customers of Special Access Services (lines) as of the implementation date of the Decision and Order in CC Docket Nos. 78-72 and 80-286, adopted June 29, 1989 and released July 20, 1989, i.e., May 15, 1990, are required to certify the jurisdiction of their services (lines).

© 2022 Frontier Communications Parent, Inc. All rights reserved

2. General Regulations (Cont'd)

2.3 Obligations of the Customer (Cont'd)

2.3.10 Jurisdictional Report Requirements (Cont'd)

Special Access Jurisdictional Verification

If a billing dispute arises or a regulatory commission questions the projected PIU factor, the Telephone Company will ask the customer to provide the data the customer uses to determine the certified interstate percentage. The customer shall supply the data within 30 days of the Telephone Company request.

The customer shall keep records of system design and functions from which the percentage was determined, and upon request of the Telephone Company make the records available for inspection as reasonably necessary for purposes of verification of the percentages.

© 2022 Frontier Communications Parent, Inc. All rights reserved

2. General Regulations (Cont'd)

2.3 Obligations of the Customer (Cont'd)

2.3.11 Reserved

© 2022 Frontier Communications Parent, Inc. All rights reserved

2. General Regulations (Cont'd)

2.3 Obligations of the Customer (Cont'd)

2.3.12 Determination of Jurisdiction of Mixed Use Special Access Service

When new mixed interstate and intrastate Special Access Service is provided, the customer will provide with the access order to the company an estimate of whether the interstate traffic will comprise more than 10%, or less than 10% of total traffic. For existing services, the customer is required to certify the jurisdiction of their service.

- If the customer's estimate of the interstate traffic on the service involved constitutes 10% or less of the total traffic on that service, the service will be provided in accordance with the applicable rules and regulations of the appropriate intrastate tariff.

- If the customer's estimate of the interstate traffic on the service involved constitutes more than 10% of the total traffic on that service, the service will be provided in accordance with the applicable rules and regulations of this Guide.

Customers who are currently being provided service under the interstate special access Voice Grade Rate Stability Plan, as stipulated in 7.4.12 following, or the DS3 Rate Stability Plan as stipulated in 7.4.13 following, wishing to convert these services to an intrastate jurisdiction, may do so without penalty for a period of ninety (90) days from the effective date of this Guide.

However, customers under the Voice Grade Rate Stability Plan will still be held accountable for the Rate Plan Growth Guarantee and shortfall penalties, stipulated in 7.4.12(C), as determined at a rate plan's anniversary date.

© 2022 Frontier Communications Parent, Inc. All rights reserved

2. General Regulations (Cont'd)

2.4 Payment Arrangements

2.4.1 Payment of Rates, Charges and Deposits

(A) The Telephone Company will, in order to safeguard its interests, only require a customer which has a proven history of late payments to the Telephone Company or does not have established credit, to make a deposit prior to or at any time after the provision of a service to the customer to be held by the Telephone Company as a guarantee of the payment of rates and charges. The Telephone Company will notify the customer of a deposit requirement by Overnight Delivery. The customer will be required to make payment of such deposit prior to the provision of service in those cases where the customer has not established credit with the Telephone Company, or otherwise within fifteen (15) business days of such notice. Such notice will start the day after the notice is sent by Overnight Delivery.

No such deposit will be required of a customer which is a successor of a company which has established credit and has no history of late payments to the Telephone Company unless this successor is one with a proven history of late payments to the Telephone Company or does not have established credit. Such deposit may not exceed the actual or estimated rates and charges for the service for a two month period. The fact that a deposit has been made in no way relieves the customer from complying with the Telephone Company's regulations as to the prompt payment of bills. At such time as the provision of the service to the customer is terminated, the amount of the deposit will be credited to the customer's account and any credit balance which will remain will be refunded.

Such a deposit will be refunded or credited to the account when the customer has established credit or, in any event, after the customer has established a one-year prompt payment record at any time prior to the termination of the provision of service to the customer. In case of a cash deposit, for the period the deposit is held by the Telephone Company, the customer will receive interest at the same percentage rate as that set forth rate as that set forth in (B)(3)(b)(I) or in (B)(3)(b)(II), whichever is lower. The rate will be for the number of days from the date the customer deposit is received by the Telephone Company to and including the date such deposit is credited to the customer's account or the date the deposit is refunded by The Telephone Company. Should a deposit be credited to the customer's account, as indicated above, no interest will accrue on the deposit from the date such deposit is credited to the customer's account.

© 2022 Frontier Communications Parent, Inc. All rights reserved

2. General Regulations (Cont'd)

2.4 Payment Arrangements (Cont'd)

2.4.1 Payment of Rates, Charges and Deposits (Cont'd)

(B) The Telephone Company shall bill on a current basis all charges incurred by and credits due to the customer under this Guide attributable to services, including, but not limited to, Maintenance of Service as set forth in 13.3.1 following, established or discontinued during the preceding billing period. In addition, the Telephone Company shall bill in advance charges for all services to be provided during the ensuing billing period except for charges associated with service usage and for the Federal Government which will be billed in arrears.

The bill day (i.e., the billing date of a bill for a customer for Access Service under this Guide), the period of service each bill covers and the payment date will be as follows:

© 2022 Frontier Communications Parent, Inc. All rights reserved

2. General Regulations (Cont'd)

2.4 Payment Arrangements (Cont'd)

2.4.1 Payment of Rates, Charges and Deposits (Cont'd)

(B) (Cont'd)

(1) For Service other than End User Access Service and Presubscription, the Telephone Company will establish a bill day each month for each customer account or advise the customer in writing of any alternate billing schedule. Alternate billing schedules shall not be established on less than 60 days notice or initiated by the Telephone Company more than twice in any consecutive 12 month period. The bill will cover nonusage sensitive service charges for the ensuing billing period for which the bill is rendered, any known unbilled nonusage sensitive charges for prior periods and unbilled usage charges for the period after the last bill day through the current bill day. Any known unbilled usage charges for prior periods and any known unbilled adjustments will be applied to this bill. Payment for such bills is due as set forth in (3) following. If payment is not received by the payment date, as set forth in (3) following in immediately available funds, a late payment penalty will apply as set forth in (3) following.

(2) (a) All bills dated as set forth in (2) preceding for service, other than End User Access Service and Presubscription, provided to the customer by the Telephone Company, are due 31 days (payment date) after the bill day or by the next bill date (i.e., same date in the following month as the bill date) whichever is the shortest interval, except as provided herein, and are payable in immediately available funds. If such payment date would cause payment to be due on a Saturday, Sunday or Holiday (i.e., New Year's Day, Independence Day, Labor Day, Election Day, Thanksgiving Day, Christmas Day, and a day when Washington's Birthday, Memorial Day or Columbus Day is legally observed), payment for such bills will be due from the customer as follows:

If such payment date falls on a Sunday or on a Holiday which is observed on a Monday, the payment date shall be the first non-Holiday day following such Sunday or Holiday. If such payment date falls on a Saturday or on a Holiday which is observed on Tuesday, Wednesday, Thursday or Friday, the payment date shall be the last non-Holiday day preceding such Saturday or Holiday.

© 2022 Frontier Communications Parent, Inc. All rights reserved

2. General Regulations (Cont'd)

2.4 Payment Arrangements (Cont'd)

2.4.1 Payment of Rates, Charges and Deposits (Cont'd)

(B) (Cont'd)

(2) (Cont'd)

(b) Further, if any portion of the payment is received by the Telephone Company after the payment date as set forth in (a) preceding, or if any portion of the payment is received by the Telephone Company in funds which are not immediately available to the Telephone Company, then a late payment penalty shall be due to the Telephone Company. The late payment penalty shall be the portion of the payment not received by the payment date times a late factor. The late factor shall be the lesser of:

(I) the highest interest rate (in decimal value) which may be levied by law for commercial transactions, for the number of days from the payment date to and including the date that the customer actually makes the payment to the Telephone Company, or

(II) 0.00024657 per day, for the number of days from the payment date to and including the date that the customer actually makes the payment to the Telephone Company.

(c) Billing Disputes

(1) A good faith dispute requires the customer to provide a written claim to the Telephone Company. Instructions for submitting a dispute can be obtained by calling the billing inquiry number shown on the customer's bill, or, by accessing the Telephone Company website also shown on the customer's bill. Such claim must identify in detail the basis for the dispute, and if the customer withholds disputed amounts, it must identify the account number under which the bill has been rendered, the date of the bill, and the specific items on the bill being disputed to permit the Telephone Company to investigate the merits of the dispute.

© 2022 Frontier Communications Parent, Inc. All rights reserved

2. General Regulations (Cont'd)

2.4 Payment Arrangements (Cont'd)

2.4.1 Payment of Rates, Charges and Deposits (Cont'd)

(B) (Cont'd)

(3) (Cont'd)

(c) (Cont'd)

(2) The date of the dispute shall be the date on which the customer furnishes the Telephone Company the account information required by Section 2.4.1(B)(3)(c)(1) above.

(3) The date of resolution is the date the Telephone Company completes the investigation and credits the customer's account.

(4) In the event that a billing dispute concerning any charges billed to the customer by the Telephone Company is resolved in favor of the Telephone Company, any payments withheld pending settlement of the dispute shall be subject to the late payment penalty set forth in (b) preceding.

© 2022 Frontier Communications Parent, Inc. All rights reserved

2. General Regulations (Cont'd)

2.4 Payment Arrangements (Cont'd)

2.4.1 Payment of Rates, Charges and Deposits (Cont'd)

(B) (Cont'd)

(3) (Cont'd)

(c) (Cont'd)

(5) If the customer pays the bill in full by the payment due date, and later initiates a billing dispute within ninety days of the payment due date, penalty interest may be applicable.

(a) If the billing dispute is resolved in favor of the customer, the customer shall receive a credit from the Telephone Company. This credit will be an amount equal to the disputed amount resolved in the customer's favor times a penalty factor. The penalty factor will apply from the date of the customer's payment through the date on which the credit for the disputed amount is posted to the customer's account. The penalty factor shall be the lesser of:

(I) The highest interest rate (in decimal value) which may be levied by law for commercial transactions, for the number of days from the first date to and including the last date of the period involved, or

(II) 0.00024657 per day, for the number of days from the first date to and including the last date of the period involved.

(b) If the dispute is resolved in favor of the Telephone Company, neither a late payment charge nor a penalty interest charge is applicable.

© 2022 Frontier Communications Parent, Inc. All rights reserved

2. General Regulations (Cont'd)

2.4 Payment Arrangements (Cont'd)

2.4.1 Payment of Rates, Charges and Deposits (Cont'd)

(B) (Cont'd)

(3) (Cont'd)

(c) (Cont'd)

(6) If the customer pays the bill in full by the payment due date, and later initiates a billing dispute after ninety days of the payment due date, penalty interest may be applicable.

(a) If the billing dispute is resolved in favor of the customer, the customer shall receive a credit from the Telephone Company. This credit will be an amount equal to the disputed amount times the penalty factor. The penalty factor will apply from the date of the dispute through the date on which the credit is posted to the customer's account. The penalty factor shall be the lesser of:

(I) the highest interest rate (in decimal value) which may be levied by law for commercial transactions, for the number of days from the first date to and including the last date or the period involved or

(II) 0.00024657 per day, for the number of days from the first date to and including the last date of the period involved.

(b) If the dispute is resolved in favor of the Telephone Company, neither a late payment charge nor a penalty interest charge is applicable.

© 2022 Frontier Communications Parent, Inc. All rights reserved

2. General Regulations (Cont'd)

2.4 Payment Arrangements (Cont'd)

2.4.1 Payment of Rates, Charges and Deposits (Cont'd)

(C) Adjustments for the quantities of services established or discontinued in any billing period beyond the minimum period set forth for services in other sections of this Guide will be prorated to the number of days or major fraction of days based on a 30 day month. The Telephone Company will, upon request and if available, furnish such detailed information as may reasonably be required for verification of any bill.

When a rate as set forth in this Guide is shown to more than two decimal places, the charges will be determined using the rate shown. The resulting amount will then be rounded to the nearest penny (i.e., rounded to two decimal places).

(E) When more than one copy of a customer bill for services provided under the provisions of this Guide is furnished to the customer, an additional charge applies for each additional copy of the bill as set forth in 13.3.7 following.

2.4.2 Minimum Periods

The minimum periods for which services are provided and for which rates and charges are applicable is one month except for those services set forth in 5.2.5(B), 7.2.5(E), (F), and (G), 7.2.11(F), 7.2.14(C), 7.2.15(E), 7.4.13, 7.4.16, 7.4.17, 7.5.4, 7.5.5, 8.2(C), 8.3(C), 16.5, 16.7, and 25.1.10, following.

The minimum period for which service is provided and for which rates and charges are applicable for a Specialized Service or Arrangement provided on an individual case basis as set forth in 12. following, is one month unless a different minimum period is established with the individual case filing.

As specified in Section 5.2.6 following, when a service is discontinued prior to the expiration of the minimum period, charges are applicable whether the service is used or not, as follows:

(A) When a service with a one month minimum period is discontinued prior to the expiration of the minimum period, a one month charge will apply at the rate level in effect at the time service is discontinued.

(B) When a service with a minimum period greater than one month is discontinued prior to the expiration of the minimum period, the applicable charge will be the lesser of (1) the Telephone Company's total nonrecoverable costs less the net salvage value for the discontinued service or (2) the total monthly charges, at the rate level in effect at the time service is discontinued, for the remainder of the minimum period.

© 2022 Frontier Communications Parent, Inc. All rights reserved

2. General Regulations (Cont'd)

2.4 Payment Arrangements (Cont'd)

2.4.3 Cancellation of an Order for Service

Provisions for the cancellation of an order for service are set forth in other applicable sections of this Guide.

2.4.4 Re-establishment of Service Following Fire, Floor or Other Occurrence (Cont'd)

(A) Nonrecurring Charges Do Not Apply

Charges do not apply for the re-establishment of service following a fire, flood or other occurrence attributed to an Act of God provided that:

(1) The service is of the same type as was provided prior to the fire, flood or other occurrence.

(2) The service is for the same customer.

(3) The service is at the same location on the same premises.

(4) The re-establishment of service begins within 60 days after Telephone Company service is available. (The 60 day period may be extended a reasonable period if the renovation of the original location on the premises affected is not practical within the allotted time period).

(B) Nonrecurring Charges Apply

Nonrecurring Charges apply for establishing service at a different location on the same premises or at a different premises pending re-establishment of service at the original location.

2.4.5 Title or Ownership Rights

The payment of rates and charges by customers for the services offered under the provisions of this Guide does not assign, confer or transfer title or ownership rights to proposals or facilities developed or utilized, respectively, by the Telephone Company in the provision of such services.

© 2022 Frontier Communications Parent, Inc. All rights reserved

2. General Regulations (Cont'd)

2.4 Payment Arrangements (Cont'd)

2.4.6 Ordering, Rating and Billing of Access Services Where More Than One Exchange Telephone Company is Involved

The Telephone Companies will handle ordering, rating and billing of Access Services under this Guide where more than one Exchange Telephone Company is involved in the provision of Access Service as set forth following. The Telephone Company will notify the customer what option will apply when the customer orders Access Service. The option will be based on the inter-connection arrangements between the Exchange Telephone Companies involved and the services ordered.

Multiple Bill Arrangements following are subject to the provisions of the Multiple Exchange Carrier Access billing Guidelines (MECAB) and the Multiple Exchange Carrier Ordering and Design Guidelines (MECOD) documents as referenced in the Memorandum Opinion and Order in CC Docket No. 86-104, adopted July 20, 1987 and released July 31, 1987.

The Telephone Company must notify the customer of: (1) the Meet Point Billing Option that will be used, (2) the Telephone Company(s) that will render the bill(s), (3) the Telephone Company(s) to whom payment(s) should be remitted, and (4) the Telephone Company(s) that will provide the bill inquiry function. The Telephone Company shall provide this notice in writing 30 days in advance of any changes.

(A) RESERVED

© 2022 Frontier Communications Parent, Inc. All rights reserved

2. General Regulations (Cont'd)

2.4 Payment Arrangements (Cont'd)

2.4.6 Ordering, Rating and Billing of Access Services Where More Than One Exchange Telephone Company is Involved (Cont'd)

(B) RESERVED

© 2022 Frontier Communications Parent, Inc. All rights reserved

2. General Regulations (Cont'd)

2.4 Payment Arrangements (Cont'd)

2.4.6 Ordering, Rating and Billing of Access Services Where More Than One Exchange Telephone Company is Involved (Cont'd)

© 2022 Frontier Communications Parent, Inc. All rights reserved

2. General Regulations (Cont'd)

2.4 Payment Arrangements (Cont'd)

2.4.6 Ordering, Rating and Billing of Access Services Where More Than One Exchange Telephone Company is Involved (Cont'd)

(C) Multiple Bill Arrangement for "Special Access" Services

(1) General - Separate bills will be rendered by the Exchange Telephone Companies for Special Access Service.

(2) Ordering - Each company will accept an order for service from the customer.

(3) Rating and Billing of Service - Each company will provide its portion of the Access Service based on the regulations, rates and charges contained in its Access Service tariff, subject to the following rules, as appropriate:

(a) The charges billed by this company for the mileage sensitive rate element, e.g., Special Access Service Channel Mileage (per mile), are determined as follows: (C)

(i) The total mileage for the service is computed using the V&H Coordinate Method set forth in National Exchange Carrier Association Tariff F.C.C. No. 4 (NECA No. 4).

© 2022 Frontier Communications Parent, Inc. All rights reserved.

2. General Regulations (Cont'd)

2.4 Payment Arrangements (Cont'd)

2.4.6 Ordering, Rating and Billing of Access Services Where More Than One Exchange Telephone Company is Involved (Cont'd)

(C) (Cont'd)

(3) (Cont'd)

(a) (Cont'd)

(ii) A billing factor called the Border Interconnection Percentage (BIP) is determined from NECA No. 4 directly.

(iii) This company's Channel Mileage (per mile) rates and charges are then multiplied by the appropriate quantity and the billing factor to obtain the Channel Mileage (per mile) charges for this company. (C)

(b) The application of non-distance sensitive rate elements varies according to the rate structure and the location of the facilities involved:

(i) When rates and charges are listed on a per point of termination basis, this company's rates will be billed for the termination(s) within this company's operating territory.

(ii) When rates and charges are listed on a per unit basis, e.g., central office bridging or multiplexing, this company's rates and charges will apply for units located in this company's operating territory.

(iii) When rates and charges are developed on an individual case basis, such rates will be developed for the portion of the service provided by this company.

(iv) When rates and charges are listed on a per service basis, these rates and charges will be billed. The Channel Mileage (fixed) flat rate is billed when Channel Mileage (per mile) applies and is always applied in full once per circuit. (C)

(v) When rates and charges are listed on a line or trunk installed basis, this company's rates will be billed based on the number of lines or trunks specified by the customer on its order for access service placed with this company.

(vi) When this company is an intermediate, non-terminating carrier in a given arrangement, channel mileage fixed charges will not apply.

© 2022 Frontier Communications Parent, Inc. All rights reserved.

2. General Regulations (Cont'd)

2.4 Payment Arrangements (Cont'd)

2.4.6 Ordering, Rating and Billing of Access Services Where More Than One Exchange Telephone Company is Involved (Cont'd)

(C) (Cont'd)

© 2022 Frontier Communications Parent, Inc. All rights reserved

2. General Regulations (Cont'd)

2.4 Payment Arrangements (Cont'd)

2.4.6 Ordering, Rating and Billing of Access Services Where More Than One Exchange Telephone Company is Involved (Cont'd)

Determination of Meet Point Billed Direct Transport and Channel Mileage Charges

Each Telephone Company's portion of the Channel Mileage will be developed as follows:

(a) Determine the appropriate Channel Mileage by computing the number of airline miles between the Telephone Company premises serving wire centers for Special Access) using the V&H method set forth respectively in this Guide.

(b) Determine the billing percentage (BP), as set forth in National Exchange Carrier Association, Inc. Tariff F.C.C. No. 4, which represents the portion of the service provided by each Telephone Company.

© 2022 Frontier Communications Parent, Inc. All rights reserved

2. General Regulations (Cont'd)

2.5 Connections

2.5.1 General

Equipment and Systems (i.e., terminal equipment, multiline terminating systems and communications systems) may be connected with Switched and Special Access furnished by the Telephone Company where such connection is made in accordance with the provisions specified in Technical Reference Publication AS No. 1 and 2.1 preceding.

© 2022 Frontier Communications Parent, Inc. All rights reserved

2. General Regulations (Cont'd)

2.6 Definitions

Certain terms used herein are defined as follows:

Access Code

The term "Access Code" denotes a uniform seven digit code assigned by the Telephone Company to an individual customer. The seven digit code, has the form 101XXXX or 950-XXXX.

Access Customer Name Abbreviation (ACNA)

The term "Access Customer Name Abbreviation" or "ACNA" denotes a term generally understood in the telecommunications industry to be the name abbreviation for a purchaser of Access Services.

Access Minutes

The term "Access Minutes" denotes that usage of exchange facilities in interstate or foreign service for the purpose of calculating chargeable usage. On the originating end of an interstate or foreign call, usage is measured from the time the originating end user's call is delivered by the Telephone Company to and acknowledged as received by the customer's facilities connected with the originating exchange. On the terminating end of an interstate or foreign call, usage is measured from the time the call is received by the end user in the terminating exchange. Timing of usage at both originating and terminating ends of an interstate or foreign call shall terminate when the calling or called party disconnects, whichever event is recognized first in the originating and terminating end exchanges, as applicable.

Access Tandem

The term "Access Tandem" denotes a Telephone Company switching system that provides a concentration and distribution function for originating or terminating traffic between end offices and customer's premises.

© 2022 Frontier Communications Parent, Inc. All rights reserved

2. General Regulations (Cont'd)

2.6 Definitions (Cont'd)

Aggregator

Denotes any individual, partnership, association, joint-stock company, trust, governmental entity or corporation as defined under Part 64.708(b) of the F.C.C. Rules and Regulations.

Answer/Disconnect Supervision

The term "Answer/Disconnect Supervision" denotes the transmission of the switch trunk equipment supervisory signal (off-hook or on-hook) to the customer's point of termination as an indication that the called party has answered or disconnected.

Asynchronous Protocol

A type of transmission where information is sent at any speed and at random with no routing information.

Attenuation Distortion

The term "Attenuation Distortion" denotes the difference in loss at specified frequencies relative to the loss at 1004 Hz, unless otherwise specified.

Balance (100 Type) Test Line

The term "Balance (100 Type) Test Line" denotes an arrangement in an end office which provides for balance and noise testing.

Bit

The term "Bit" denotes the smallest unit of information in the binary system of notation.

© 2022 Frontier Communications Parent, Inc. All rights reserved

2. General Regulations (Cont'd)

2.6 Definitions (Cont'd)

Business Day

The term "Business Day" denotes the times of day that a company is open for business. Generally, in the business community, these are 8:00 or 9:00 A.M. to 5:00 or 6:00 P.M., respectively, with an hour for lunch, Monday through Friday, resulting in a standard forty (40) hour work week. However, Business Day hours for the Telephone Company may vary based on company policy, union contract and location. To determine such hours for an individual company, or company location, that company should be contacted at the address shown on the Check Sheet.

Busy Hour Minutes of Capacity (BHMC)

The term "Busy Hour Minutes of Capacity (BHMC) denotes the customer specified maximum amount of Switched Access Service and/or Directory Assistance Service access minutes the customer expects to be handled in an end office switch during any hour in an 8:00 A.M. to 11:00 P.M. period for the Feature Group and/or Directory Assistance Service ordered.

Cable Space

The term "Cable Space" denotes any passage or opening in, on, under/over or through the central office cable support structure required to bring fiber optic riser cable from the manhole or other designated location to the collocated interconnection space, as well as the space between the collocated interconnection space, and the Telephone Company Point of Termination, and any other space required to bring other communications cable from one collocated interconnection space to another collocated interconnection space of the same Collocator.

Cable Support Structure

The system of riser ducts, cable racking and other such facilities of the Telephone Company that are used to contain and support Collocated Interconnection cable within central offices and between central offices and the manhole or other designated location pursuant to Section 19.

Call

The term "Call" denotes a customer attempt for which the complete address code (e.g., 0-, 911, or 10 digits) is provided to the serving dial tone office.

© 2022 Frontier Communications Parent, Inc. All rights reserved

2. General Regulations (Cont'd)

2.6 Definitions (Cont'd)

Carrier or Common Carrier

See Interexchange Carrier.

Carrier Identification Code (CIC)

The term "Carrier Identification Code" (CIC) denotes a unique four digit access identification code that is assigned by Bellcore for use with Feature Group B or D Switched Access Service. The CIC identifies the caller's long distance carrier.

CCS

The term "CCS" denotes a hundred call seconds, which is a standard unit of traffic load that is equal to 100 seconds of usage or capacity of a group of servers (e.g, trunks).

Cellular Exchange Carrier (CEC)

The term "Cellular Exchange Carrier" defines a Common Carrier authorized by the Federal Communications Commission to provide Cellular Mobile Radio Telecommunications Services.

Central Office

The term "Central Office" denotes a local Telephone Company switching system, where Telephone Exchange Service customer station loops are terminated for purposes of interconnection to each other and to trunks. In the case of a Remote Switching Module (RSM), the term Central Office designates the combination of the Remote Switching Unit and its Host.

Central Office Prefix

The term "Central Office Prefix" denotes the first three digits (NXX) of the seven digit telephone number assigned to a customer's Telephone Exchange Service when dialed on local basis.

Centralized Automatic Reporting on Trunks Testing

The term "Centralized Automatic Reporting on Trunks Testing" denotes a type of testing which includes the capacity for measuring operational and transmission parameters.

© 2022 Frontier Communications Parent, Inc. All rights reserved

2. General Regulations (Cont'd)

2.6 Definitions (Cont'd)

Channel(s)

The term "Channel(s)" denotes an electrical or photonic, in the case of fiber optic-based transmission systems, communications path between two or more points of termination.

Channelize

The term "Channelize" denotes the process of multiplexing-demultiplexing wider bandwidth or higher speed channels into narrower bandwidth or lower speed channels.

Circuit Code

The term "Circuit Code" indicates the specific Interexchange Carrier trunk group that is required to carry the call for SS7 Signalling. It equates to the OZZ Code with MF Signalling and is contained in the TNS parameter.

C-Message Noise

The term "C-Message Noise" denotes the frequency weighted average noise within an idle voice channel. The frequency weighting, called C-message, is used to simulate the frequency characteristic of the 500-type telephone set and the hearing of the average subscriber.

C-Notched Noise

The term "C-Notched Noise" denotes the C-message frequency weighted noise on a voice channel with a holding tone, which is removed at the measuring and through a notch (very narrow band) filter.

Coin Station

The term "Coin Station" denotes a location where Telephone Company equipment is provided in a public or semipublic place where Telephone Company customers can originate telephonic communications and pay the applicable charges by inserting coins into the equipment.

© 2022 Frontier Communications Parent, Inc. All rights reserved

2. General Regulations (Cont'd)

2.6 Definitions (Cont'd)

Collocated Interconnection Design and Construction Work

The term "Collocated Interconnection Design and Construction Work" under Collocated Interconnection denotes all work by Telephone Company, including but not limited to, space design and preparation, the rearrangement of existing facilities, design and construction of collocated interconnection space enclosure, design and placement of required cable support structure or any other activity required to accommodate the installation of Collocator's facilities in the Telephone Company space(s). Similar work required or requested by Collocator after initial installation solely because of the existence of the Collocator's facilities shall be referred to as "Additional Design and Construction", and shall be at Collocator's expense.

Collocated Interconnection Space

The term "Collocated Interconnection Space" denotes suitable space intended for occupancy by Collocated Interconnection equipment required for telecommunications operations and the work area required to maintain that equipment. All suitable space shall be partitioned and measured as defined in Building Owners and Managers Association International (BOMA) standards as "rentable area."

Collocator

The term "Collocator" denotes a customer who subscribes to Collocated Interconnection and who brings fiber optic and/or microwave facilities to Telephone Company-designated locations for connection to Collocated Interconnection equipment as specified in the following Regulations, under physical or virtual interconnection arrangements. All such services and facilities used for Collocated Interconnection will be for the carriage of interstate non-switched traffic.

Collocator's Facilities

The term "Collocator's Facilities" denotes the telecommunications cable and equipment owned/leased and installed by the Collocator for the sole use of the Collocator in connection with equipment installed within its Collocated Interconnection Space.

© 2022 Frontier Communications Parent, Inc. All rights reserved

2. General Regulations (Cont'd)

2.6 Definitions (Cont'd)

Common Line

The term "Common Line" denotes a line, trunk, pay telephone line or other facility provided under the local general services tariffs of the Telephone Company, terminated on a central office switch. A common line-residence is a line or trunk provided under the residence regulations of the local general services tariffs. A common line-business is a line provided under the business regulations of the local general services tariffs.

Communications System

The term "Communications System" denotes channels and other facilities which are capable of communications between terminal equipment provided by other than the Telephone Company.

Competitive County

The term “Competitive County” denotes the geographic unit of a county or county-equivalent that passes or has passed a competitive market test specified by the FCC. Competitive County also denotes a county or county-equivalent that failed a competitive market test specified by the FCC, but was granted Phase II, Level 2 pricing flexibility prior to June 1, 2017.

Connecting Facility Assignment

The term "Connecting Facility Assignment or (CFA)" denotes the identification of a channel or circuit to be used from a high capacity facility.

Conventional Signaling

The inter-machine signaling system which has been traditionally used in North America for the purpose of transmitting the called number's address digits from the originating end office to the switching machine which will terminate the call. In this system, all of the dialed digits are received by the originating switching machine, a path is selected, and the sequence of supervisory signals and outpulsed digits is initiated. No overlap outpulsing, ten-digit ANI, ANI information digits, or acknowledgement wink are included in this signaling sequence.

Corridor Service

The term "Corridor Service" applies to the exceptions to the MFJ Decree that allow the Telephone Company to provide interstate interLATA services in certain designated areas.

Customer(s)

The term "Customer(s)" denotes any individual, partnership, association, joint-stock company, trust, corporation, or governmental entity or other entity which subscribes to the services or other arrangements offered under this Guide, including both Interexchange Carriers (ICs) and End users.

© 2022 Frontier Communications Parent, Inc. All rights reserved

2. General Regulations (Cont'd)

2.6 Definitions (Cont'd)

Data Transmission (107 Type) Test Line

The term "Data Transmission (107 Type) Test Line" denotes an arrangement which provides for a connection to a signal source which provides test signals for one-way testing of data and voice transmission parameters.

Decibel

The term "Decibel" denotes a unit used to express relative difference in power, usually between acoustic or electric signals, equal to ten (10) times the common logarithm of the ratio of two signal powers.

Decibel Reference Noise C-Message Weighting

The term "Decibel Noise C-Message Weighting" denotes noise power measurements with C-Message Weighting in decibels relative to a reference 1000 Hz tone of 90 dB below 1 milliwatt.

Decibel Reference Noise C-Message Referenced to O

The term "Decibel Reference Noise C-Message Referenced to O" denotes noise power in "Decibel Reference Noise C-Message Weighting" referred to or measured at a zero transmission level point.

Digital Cross-Connect System (DCS)

The term "Digital Cross-Connect system" or "DCS" denotes an electronic switching node that enables circuits to be cross-connected.

Direct-Trunked Transport Facility

Denotes a Switched Transport facility between a Telephone Company serving wire center and an end office or between a Telephone Company Serving Wire Center and an access tandem that provides a customer with dedicated transport.

© 2022 Frontier Communications Parent, Inc. All rights reserved

2. General Regulations (Cont'd)

2.6 Definitions (Cont'd)

Directory Assistance (Interstate)

The term "Directory Assistance" denotes the provision of telephone numbers by a Telephone Company operator when the operator location is accessed by a customer by dialing 1 + NPA + 555-1212, or 411 or 555-1212, whichever is available.

Directory Assistance Location (Interstate)

The term "Directory Assistance Location" denotes a Telephone Company office where Telephone Company equipment first receives the Directory Assistance call from a customer's end user and selects the first operation position to respond to the Directory Assistance call.

Directory Number

Denotes a unique NPA-NXX-XXXX code assigned to a subscriber of a local service provider.

Discontinuance Non-Recurring Charge (N)

In addition to any other charges associated with discontinuance of services, the Telephone Company will charge a discontinuance non-recurring charge to disconnect services. This charge applies on a per circuit basis. (N)

Donor Switch

Denotes the original switch source of an NXX that has been designated as portable and from which a subscriber has moved its service, while retaining its Directory Number, to a different service provider.

Dual Tone Multifrequency Address Signaling

The term "Dual Tone Multifrequency Address Signaling" denotes a type of signaling that is an optional feature of Switched Access Feature Group A. It may be utilized when Feature Group A is being used in the terminating direction (from the point of termination with the customer to the local exchange end office). An office arranged for Dual Tone Multifrequency Signaling would expect to receive address signals from the customer in the form of Dual Tone Multifrequency signals.

Echo Control

The term "Echo Control" denotes the control of reflected signals in a telephone transmission path.

Echo Path Loss

The term "Echo Path Loss" denotes the measure of reflected signal at a 4-wire point of termination without regard to the send and receive Transmission Level Point.

© 2024 Frontier Communications Parent, Inc. All rights reserved

2. General Regulations (Cont'd)

2.6 Definitions (Cont'd)

Echo Return Loss

The term "Echo Return Loss" denotes a frequency weighted measure of return loss over the middle of the voiceband (approximately 500 to 2500 Hz), where talker echo is most annoying.

Effective 2-Wire

The term "Effective 2-Wire" denotes a condition which permits the simultaneous transmission in both directions over a channel, but it is not possible to insure independent information transmission in both directions. Effective 2-wire channels may be terminated with 2-wire or 4-wire interfaces.

Effective 4-Wire

The term "Effective 4-Wire" denotes a condition which permits the simultaneous independent transmission of information in both directions over a channel. The method of implementing effective 4-wire transmission is at the discretion of the Telephone Company (physical, time domain, frequency-domain separation or echo cancellation techniques). Effective 4-wire channels may be terminated with a 2-wire interface at the customer's premises. However, when terminated 2-wire, simultaneous independent transmission cannot be supported because the 2-wire interface combines the transmission paths into a single path.

End Office Switch

The term "End Office Switch" denotes a local Telephone Company switching system, where Telephone Exchange Service customer station loops are terminated for purposes of interconnection to trunks. In the case of a Remote Switching Module, the term End Office Switch designates the combination of the Remote Switching Module and its Host.

End User

The term "End User" denotes any customer of an interstate or foreign telecommunications service that is not a carrier, except that a carrier other than a telephone company shall be deemed to be an "end user" when such carrier uses a telecommunications service for administrative purposes and a person or entity that offers telecommunications services exclusively as a reseller shall be deemed to be an "end user" if all resale transmission offered by such reseller originate on the premises of such reseller.

© 2022 Frontier Communications Parent, Inc. All rights reserved

2. General Regulations (Cont'd)

2.6 Definitions (Cont'd)

Entrance Facility

Denotes a Switched Transport Facility between a Telephone Company serving wire center and a customer premises that provides a customer with dedicated transport from the serving wire center to the customer premises.

Entry Switch

See First Point of Switching.

Envelope Delay Distortion

The term "Envelope Delay Distortion" denotes a measure of the linearity of the phase versus frequency of a channel.

Equal Level Echo Path Loss

The term "Equal Level Echo Path Loss" (ELEPL) denotes the measure of Echo Path Loss (EPL) at a 4-wire interface which is corrected by the difference between the send and receive Transmission Level Point (TLP). [ELEPL = EPL - TLP (send) + TLP (receive)].

Ethernet

The term “Ethernet” denotes a protocol provided over various media reflecting the two lowest layers of the Digital Network Architecture/Open Systems Interconnections (DNA/OSI) standard. This protocol provides for connectivity of computers, printers, workstations, terminals and other devices across Local Area Networks and Wide Area Networks (LANs & WANs). DNA/OSI standards are maintained by the American National Standards Institute.

Exchange

The term "Exchange" denotes a unit generally smaller than a Local Access and Transport Area, established by the Telephone Company for the administration of communications service in a specified area which usually embraces a city, town, or village and its environs. It consists of one or more central offices together with the associated facilities used in furnishing communications service within that area. One or more designated exchanges comprise a given Local Access and Transport Area.

© 2022 Frontier Communications Parent, Inc. All rights reserved

2. General Regulations (Cont'd)

2.6 Definitions (Cont'd)

Exchange Access Signaling

The signaling system which is used, by equal access end offices, to transmit originating information and address digits to the customer's premises and which includes the means of verifying the receipt of these address digits. Features of this system include overlap outpulsing, identification of the type of call, identification of the ten-digit telephone number of the calling party, and acknowledgement wink supervisory signals.

Expected Measured Loss

The term "Expected Measured Loss" denotes a calculated loss which specifies the end-to-end 1004-Hz loss on a terminated test connection between two readily accessible manual or remote test points. It is the sum of the inserted connection loss and test access loss including any test pads.

Extensible Markup Language (XML)

The term "Extensible Markup Language (XML)" denotes a simple, very flexible text format that is used in the exchange of a wide variety of data on the Web and elsewhere.

Field Identifier

The term "Field Identifier" denotes two to four characters that are used on service orders to convey specific instructions. Field Identifiers may or may not have associated data. Selected Field Identifiers are used in Telephone Company billing systems to generate nonrecurring charges.

First-Come, First-Served

The term "First-come, First-Served" denotes a procedure followed when the first order received will be the first order processed, except as provided in 2.1.2 .

First Point of Switching

The term "First Point of Switching" denotes the first Telephone Company location at which switching occurs on the terminating path of a call proceeding from the customer premises to the terminating end office and, at the same time, the last Telephone Company location at which switching occurs on the originating path of a call proceeding from the originating end office to the customer premises.

© 2022 Frontier Communications Parent, Inc. All rights reserved

2. General Regulations (Cont'd)

2.6 Definitions (Cont'd)

Flexible Automatic Number Identification (Flexible ANI)

The term "Flexible Automatic Number Identification" denotes an optional feature or Basic Service Element that provides additional values for the information indicator digits available with the ANI feature on originating calls. These additional digits identify the type of line that is originating the call for billing, screening and routing purposes.

Frequency Shift

The term "Frequency Shift" denotes the change in the frequency of a tone as it is transmitted over a channel.

Grandfathered

The term "Grandfathered" denotes Terminal Equipment, Multiline Terminating Systems and Protective Circuitry directly connected to the facilities utilized to provide services under the provisions of this Guide, and which are considered grandfathered under Part 68 of the F.C.C.'s Rules and Regulations.

High Volume Call-In Networks

Denotes a unique NXX that has a presence in several switches within the designated Local Calling Area for which terminating calls are routed over dedicated trunks to a single tandem switch. This is done for the purpose of controlling the impact on the local network from potentially high volumes of terminating calls that may be directed to specific Directory Numbers within such NXXs at a customer's request.

Host Office

The term "Host Office" denotes an electronic switching system which provides call processing capabilities for one or more Remote Switching Modules or Remote Switching Systems.

Immediately Available Funds

The term "Immediately Available Funds" denotes a corporate or personal check drawn on a bank account and funds which are available for use by the receiving party on the same day on which they are received and include U.S. Federal Reserve bank wire transfers, U.S. Federal Reserve notes (paper cash), U.S. coins, U.S. Postal Money Orders and New York Certificates of Deposit.

© 2022 Frontier Communications Parent, Inc. All rights reserved

2. General Regulations (Cont'd)

2.6 Definitions (Cont'd)

Impedance Balance

The term "Impedance Balance" denotes the method of expressing Echo Return Loss and Singing Return Loss at a 4-wire interface whereby the gains and/or loss of the 4 wire portion of the transmission path, including the hybrid, are not included in the specification.

Impulse Noise

The term "Impulse Noise" denotes any momentary occurrence of the noise on a channel over a specified level threshold. It is evaluated by counting the number of occurrences which exceed the threshold.

Individual Case Basis

The term "Individual Case Basis" (ICB) denotes a condition in which the regulations, if applicable, rates and charges for an offering under the provisions of this Guide are developed based on the circumstances in each case.

Inserted Connection Loss

The term "Inserted Connection Loss" denotes the 1004 Hz power difference (in dB) between the maximum power available at the originating end and the actual power reaching the terminating end through the inserted connection.

Interexchange Carrier (IC) or Interexchange Common Carrier

The terms "Interexchange Carrier" (IC) or "Interexchange Common Carrier" denotes any individual, partnership, association, joint-stock company, trust, governmental entity or corporation engaged for hire in interstate or foreign communication by wire or radio, between two or more exchanges.

Intermodulation Distortion

The term "Intermodulation Distortion" denotes a measure of the non-linearity of a channel. It is measured using four tones, and evaluating the ratios (in dB) of the transmitted composite four-tone signal power to the second-order products of the tones (R2), and the third-order products of the tones (R3).

© 2022 Frontier Communications Parent, Inc. All rights reserved

2. General Regulations (Cont'd)

2.6 Definitions (Cont'd)

Interstate Communications

The term "Interstate Communications" denotes both interstate and foreign communications.

Interstate IntraLATA

The term Interstate IntraLATA denotes physically interstate services between two points within the same LATA which are not used in connection with InterLATA channels.

Intrastate Communications

The term "Intrastate Communications" denotes any communications within the state subject to oversight by a state regulatory commission as provided by the laws of the state involved.

Line Information Data Base

The term "Line Information Data Base" refers to the data base which contains billing information such as calling card number and billed number restriction data that is used in connection with the billing of calls.

Line-Side Connection

The term "Line-Side Connection" denotes a connection of a transmission path to the line side of a local exchange switching system.

Local Access and Transport Area

The term "Local Access and Transport Area" denotes a geographic area established for the provision and administration of communications service. It encompasses one or more designated exchanges, which are grouped to serve common social, economic and other purposes.

Local Area Network

A short-distance data communications network (typically within a building or campus) used to link together computers and other electronic devices.

© 2022 Frontier Communications Parent, Inc. All rights reserved

2. General Regulations (Cont'd)

2.6 Definitions (Cont'd)

Local Calling Area

The term "Local Calling Area" denotes a geographical area, as defined in the Telephone Company's Local and/or General Exchange Service tariff, in which an end user (Telephone Exchange Service subscriber) may complete a call without incurring Toll charges.

Local Tandem Switch

The term "Local Tandem Switch" denotes a local Telephone Company switching unit by which local or access telephonic communications are switched to and from an End Office Switch.

Location Routing Number (LRN)

Denotes a NPA-NXX-XXXX within a NXX that is assigned to a switch that serves ported numbers. The LRN is associated with ported numbers in the Local Number Portability database for the recipient switch and is required to route calls directed to ported numbers working out of the switch.

Logical Channel

A communications channel through or link in the network that allows simultaneous transmission of sequenced data packets through the network. No circuit capacity is preassigned to a logical channel. Capacity is made available as data is transmitted.

Loop Around Test Line

The term "Loop Around Test Line" denotes an arrangement utilizing a telephone company central office to provide a means to make certain two-way transmission tests on a manual basis. This arrangement has two central office terminations, each reached by means of separate telephone numbers and does not require any specific customer premises equipment. Equipment subject to this test arrangement is at the discretion of the customer.

Loss Deviation

The term "Loss Deviation" denotes the variation of the actual loss from the designed value.

Major Fraction Thereof

The term "Major Fraction Thereof" is any period of time in excess of 1/2 of the stated amount of time. As an example, in considering a period of 24 hours, a major fraction thereof would be any period of time in excess of 12 hours exactly. Therefore, if a given service is interrupted for a period of thirty-six hours and fifteen minutes, the customer would be given a credit allowance for two twenty-four hour periods for a total of forty-eight hours.

© 2022 Frontier Communications Parent, Inc. All rights reserved

2. General Regulations (Cont'd)

2.6 Definitions (Cont'd)

Manhole

The term "Manhole" denotes an underground enclosure which provides access to Collocated Interconnection Cable Support Structure.

Maritime Radio Common Carriers (MRCCs)

The term "Maritime Radio Common Carriers (MRCCs)" denotes carriers which are regulated under Part 81 of the Federal Communications Commission's Rules and Regulations.

Meet Point Billing

The term "Meet Point Billing" denotes the arrangement which requires multiple Exchange Telephone Companies, involved in providing applicable access services, to divide the ordering, rating, and billing of such services on a proportional basis, so that each Exchange Telephone Company involved bills under its respective tariff.

Message

The term "Message" denotes a "call" as defined preceding.

Message Unit Credits

The term "Message Unit Credits" denotes the credit applied to the local switching charges assessed to customers handling end user originating interstate or foreign service calls which are subject to message unit charges.

Metropolitan Statistical Area (MSA)

The term “Metropolitan Statistical Area (MSA)” denotes a prescribed geographic area comprised of Telephone Company wire centers that have been grouped together.

Milliwatt (102 Type) Test Line

The term "Milliwatt (102) Type) Test Line" denotes an arrangement in an end office which provides a 1004 Hz tone at 0 dBm0 for one-way transmission measurement towards the customer's premises from the Telephone Company end office.

© 2022 Frontier Communications Parent, Inc. All rights reserved

2. General Regulations (Cont'd)

2.6 Definitions (Cont'd)

Mobile Telephone Switching Office (MTSO)

The term "Mobile Telephone Switching Office" (MTSO) denotes the switching facility used by a CEC or RCC in performing originating and terminating switching functions for calls exchanged between their customers, the Telephone Company customers, Interchange Carriers, and independent Telephone Company customers.

Modem

Contraction of modulator-demodulator. A device which modulates and demodulates signals transmitted over communication facilities.

N-1 Carrier

Denotes the carrier that is delivering a call to the Telephone Company's switch and is responsible for determining the status and Location Routing Number of the dialed NXX.

Native Ethernet

Denotes an Ethernet transmission that is not carried within a SONET signal.

Network Address

Numeric character string used to specify the location of the called customer.

Network Control Signaling

The term "Network Control Signaling" denotes the transmission of signals used in the telecommunications system which perform functions such as supervision (control, status, and charge signals), address signaling (e.g., dialing), calling and called number identifications, rate of flow, service selection error control and audible tone signals (call progress signals indicating re-order or busy conditions, alerting, coin denominations, coin collect and coin return tones) to control the operation of the telecommunications system.

© 2022 Frontier Communications Parent, Inc. All rights reserved

2. General Regulations (Cont'd)

2.6 Definitions (Cont'd)

Network Interface Device

The term "Network Interface Device" denotes any Company provided means of interconnection of end user customer premises wiring to the Local Exchange Carrier's distribution plant, such as a cross connect device used for that purpose.

Non-Competitive County

The term "Non-Competitive County" denotes the geographic unit of a county or county-equivalent that failed a competitive market test specified by the FCC (excluding those that were granted Phase II, Level 2 pricing flexibility prior to June 1, 2017 and thus are defined as "Competitive Counties").

Non-Standard Premises

The term "Non-Standard Premises", NSP, denotes a free-standing structure, e.g., a billboard, a communication, electrical or water tower, etc., which is used for an antenna site. See also Premises.

Nonsynchronous Test Line

The term "Nonsynchronous Test Line" denotes an arrangement in step-by-step end offices which provides operational tests which are not as complete as those provided by the synchronous test lines, but can be made more rapidly.

North American Numbering Plan

The term "North American Numbering Plan" denotes a three-digit area (Numbering Plan Area) code and a seven-digit telephone number made up of a three-digit Central Office code plus a four-digit station number.

Off-Hook

The term "Off-hook" denotes the active condition of Switched Access or a Telephone Exchange Service line.

On-hook

The term "On-hook" denotes the idle condition of Switched Access or a Telephone Exchange Service line.

Open Circuit Test Line

The term "Open Circuit Test Line' denotes an arrangement in an end office which provides an ac open circuit termination of a trunk or line by means of an inductor of several Henries.

© 2022 Frontier Communications Parent, Inc. All rights reserved

2. General Regulations (Cont'd)

2.6 Definitions (Cont'd)

Operator Services System

Equipment capable of processing certain kinds of traffic originating or terminating to an end office; this processing may take place either with or without an operator's assistance. Use of such equipment includes call rating and charge recording functions, operator assistance functions, coin control and collection functions, automatic or manual identification of calling line number, and verification of the busy/idle condition of subscriber lines.

Originating Direction

The term "Originating Direction" denotes the use of Access Service for the origination of calls from an End User premises to a customer premises.

Out of Band Signaling

The term "Out of Band Signaling" denotes an exchange access signaling feature which allows customers to exchange call control and signaling information over a communications path which is separate from the message path.

Overlap Outpulsing

The feature of the exchange access signaling system which permits initiation of pulsing to the customer's premises before the calling subscriber has completed dialing an originating call.

OZZ Code

The OZZ Code indicates the specific Interexchange Carrier trunk group that is to carry the call for MF Signalling.

Packet

Continuous sequence of binary digits of information is switched through the network and an integral unit. Consists of up to 1024 bits (128 octets) of customer data plus additional transmission and error control information.

© 2022 Frontier Communications Parent, Inc. All rights reserved

2. General Regulations (Cont'd)

2.6 Definitions (Cont'd)

Pay Telephone

The term "Pay Telephone" denotes Telephone Company provided instruments and related facilities that are available to the general public for public convenience and necessity, including public and semipublic telephones, and coinless telephones.

Periodic Inspection

The term "Periodic Inspection" denotes inspections conducted at regular or irregular intervals of all or portions of the Collocator's facilities, to determine that occupancies are authorized and are installed and maintained in conformance with the requirements set forth herein. Telephone Company will notify Collocator in advance of such inspections, and Collocator shall have the right to be present at the time of inspection.

Phase Jitter

The term "Phase Jitter" denotes the unwanted phase variations of a signal.

Physically-Collocated Interconnection

The term "Physically-Collocated Interconnection" denotes an arrangement where the Collocator's facilities will be interconnected with Collocator owned and provided equipment that is physically located in a Collocated Interconnection Space within a Telephone Company central office building. The standard method of interconnection is through a point of interconnection (POT) bay. Collocators may propose alternative means of interconnection that are technically feasible by submitting a bona fide request for negotiation. (See Section 19 following for further information.)

Point of Termination

The term "Point of Termination" denotes the point of demarcation, within a customer-designated premises at which the Telephone Company's responsibility for the provision of Access Service ends.

© 2022 Frontier Communications Parent, Inc. All rights reserved

2. General Regulations (Cont'd)

2.6 Definitions (Cont'd)

Post-Installation Inspection

The term "Post-Installation Inspection" under Collocated Interconnection denotes the work activities performed to visually observe Collocator's equipment and cable facilities and equipment installation during and after the completion of the installation of such equipment and facilities to determine that all occupancies conform to the standards required.

Pre-Construction Work

The term "Pre-Construction Work" under Collocated Interconnection denotes the work activities performed by Telephone Company in order to process an application for occupancy to the point just prior to performing any necessary Design and Construction Work.

Premises

The term "Premises" denotes a building or a portion of a building in a multitenant building, or buildings on a continuous property (except Railroad right-of-way, etc.) not separated by a public highway except for an end user that offers Telecommunications Services exclusively as a reseller, this term is not to be limited to one building, but applies as well to a complex, or campus-type configuration, or buildings. "Premises" does not include Collocated Interconnection Space. See also Non-Standard Premises.

Prime Service Vendor

The term "Prime Service Vendor" denotes the status of the Telephone Company when contracting directly with the user of TSP service.

Protocol

Set of rules conducting interactions between two or more parties. These rules consist of syntax (header structure) semantics (actions and reactions that are supposed to occur) and timing (relative ordering and direction of states and events).

Query

Denotes a signaling message requesting processing instructions or service data contained in a centralized database.

Radio Common Carriers (RCCs)

The term "Radio Common Carriers (RCCs) denotes carriers which are regulated under Part 22 of the Federal Communications Commission's Rules and Regulations.

© 2022 Frontier Communications Parent, Inc. All rights reserved

2. General Regulations (Cont'd)

2.6 Definitions (Cont'd)

Rate Zones

The term "Rate Zone" denotes a pricing unit for rating High Capacity Switched Access Transport and Special Access services. Rate zones are established based principally upon the volume of traffic carried by a wire center, traffic density, and are divided into three categories: Rate Zone 1 - high density, Rate Zone 2 - medium density, and Rate Zone 3 - low density.

Recipient Switch

Denotes any end office switch that serves Directory Numbers (DN) within a number portable NXX that is not originally assigned to the switch. Customers assigned a Directory Number (DN) within the indicated NXX that is working out of a switch other than the one originally designated is said to have ported their number to this recipient switch.

Reconfigure Service

The term Reconfigure Service denotes a service whereby customers can reconfigure a specific voice grade, DDS and/or individual channels within a High Capacity DS1 service connected at a digital cross-connect system.

Regional Service Management System/Number Portability Administration Center (RSMS/NPAC)

Denotes the third party administered database which maintains the information on all ported numbers in a particular geographic area, in this case the Telephone Company's region.

Remote Switching Modules and/or Remote Switching Systems

The term "Remote Switching Modules and/or Remote Switching Systems" denotes small, remotely controlled electronic segments of an end office switch which obtain part of their call processing capability from a Host Office. The combination of a Remote Switching Module and its Host Office comprise an End Office Switch.

Return Loss

The term "Return Loss" denotes a measure of the similarity between the two impedances at the junction of two transmission paths. The higher the return loss, the higher the similarity.

Registered Equipment

The term "Registered Equipment" denotes the customer's premises equipment which complies with and has been approved within the Registration Provisions of Part 68 of the F.C.C.'s Rules and Regulations.

© 2022 Frontier Communications Parent, Inc. All rights reserved

2. General Regulations (Cont'd)

2.6 Definitions (Cont'd)

Secure Socket Layer (SSL)

The term "Secure Socket Layer (“SSL)" denotes a security protocol that provides data encryption, server authentication, message integrity, and optional client authentication for a TCP/IP connection.

Serving Wire Center

The term Serving Wire Center denotes the first Telephone Company wire center to which facilities are connected on the terminating path of a call proceeding from the customer premises to the terminating end office.

Seven Digit Manual Test Line

The term "Seven Digit Manual Test Line" denotes an arrangement which allows the customer to select balance, milliwatt and synchronous test lines by manually dialing a seven digit number over the associated access connection.

Shared Network Arrangement

The term "Shared Network Arrangement" denotes a service offering whereby a Service User may connect subtending services to a Host Subscriber's service, and the Telephone Company will undertake to maintain separate customer records and billing.

Short Circuit Test Line

The term "Short Circuit Test Line" denotes an arrangement in an end office which provides for an ac short circuit termination of a trunk or line by means of a capacitor of at least four microfarads.

Signal-to-C-Notched Noise Ratio

The term "Signal-to-C-Notched Noise Ratio" denotes the ratio in dB of a test signal to the corresponding C-Notched Noise.

Signal Transfer Point

The term "Signal Transfer Point" denotes a specialized switch which provides SS7 network access and performs SS7 message routing and screening.

© 2022 Frontier Communications Parent, Inc. All rights reserved

2. General Regulations (Cont'd)

2.6 Definitions (Cont'd)

Signaling Point of Interface

The term "Signaling Point of Interface" denotes the customer designated location, in the same LATA as the Telephone Company STP, where SS7 signaling information is exchanged between the Telephone Company and the customer.

Signaling Systems 7

The term "Signaling System 7" (SS7) denotes the out of band signaling protocol developed by the Consultative Committee for International Telephone and Telegraph (CCITT) and the American National Standards Institute (ANSI).

Singing Return Loss

The term "Singing Return Loss" denotes the frequency weighted measure of return loss at the edges of the voiceband (200 to 500 Hz and 2500 to 3200 Hz), where singing (instability) problems are most likely to occur.

Special Order

The term "Special Order" denotes an order for a Billing and Collection Service or an order for a Directory Assistance Service.

Subcontractor

The term "Subcontractor" denotes the status of the Telephone Company when contracting directly with a Prime Service Vendor to provide TSP to a service user.

Subscriber Line Charge

The term "Subscriber Line Charge" denotes the charge applicable to the end user common line. In Pennsylvania and Delaware this charge is referred to as a Line Cost Charge.

© 2022 Frontier Communications Parent, Inc. All rights reserved

2. General Regulations (Cont'd)

2.6 Definitions (Cont'd)

Subsequent Inspections

The term "Subsequent Inspections" under Collocated Interconnection denotes the work operations performed by Telephone Company in order to verify that corrective action has been taken by the Collocator on variances from required safety, construction and maintenance practices reported to the Collocator by Telephone Company. Telephone Company will notify Collocator in advance of such inspections, and Collocator shall have the right to be present at the time of inspection.

Subtending End Office of an Access Tandem

The term "Subtending End Office of an Access Tandem" denotes an end office that has final trunk group routing through that tandem.

Switched Access Signalling Service (SASS)

The term "Switched Access Signalling Service" denotes transmission of the Carrier Identification Code (CIC) and the OZZ Code with MF Signalling; or the TNS parameter with SS7 Signalling. This service is available to TSPs and is provided from the Telephone Company end offices.

Switching System

The term "Switching System" denotes the hardware and/or software utilized by the Telephone Company for the establishment and maintenance of a given central office.

Synchronous Test Line

The term "Synchronous Test Line" denotes an arrangement in an end office which performs marginal operational tests of supervisory and ring-tripping functions.

Tandem Switching Provider (TSP)

The term "Tandem Switching Provider" denotes any Interexchange Carrier, End User, or other access provider who provides tandem switching functions for switched transport services.

Tandem Switched Transport

The term "Tandem Switched Transport" denotes the transport from the serving wire center of the customer's premises to an end office that is switched at a tandem switch. Tandem Switched Transport consists of circuits dedicated to the use of a single customer from the serving wire center to the tandem and circuits used in common by multiple customers from the tandem to an end office.

© 2022 Frontier Communications Parent, Inc. All rights reserved

2. General Regulations (Cont'd)

2.6 Definitions (Cont'd)

Telecommunication Relay Service (TRS)

TRS denotes the process where end user dialed calls are routed to a Telecommunication Relay Service Center for delivery to the Telephone Company. The Telephone Company in turn directs the call, via either the Trunkside BSA-101XXXX Option or Switched Access FGD Service, to an access tandem for delivery to the selected Interexchange Carrier of choice.

Telecommunication Relay Service (TRS) Center

Denotes the location of the provider of Telecommunication Relay Service (TRS).

Telephone Company Answering Service Concentrator

Answering Service Concentrator denotes equipment located on the Telephone Company premises which, when used in conjunction with an identifier or similar equipment located at the answering service premises, enables the answering bureau to answer incoming calls for customers at their location without the necessity of having a channel from each customer's location to the bureau's location.

Terminating Direction

The term "Terminating Direction" denotes the use of Access Service for the completion of calls from a customer premises to an End User premises.

© 2022 Frontier Communications Parent, Inc. All rights reserved

2. General Regulations (Cont'd)

2.6 Definitions (Cont'd)

Toll Free Database

The term "Toll Free" refers to the use of database technology to determine to which access customer an originating toll free call is to be delivered. An originating toll free call is a call made with the prefix 1+800, 1+888, 1+877, 1+866, 1+855, 1+844, 1+833, or 1+822. The toll free database routes calls to an access customer based on the dialed ten digit toll free number. Initially, the Toll Free Database will provide routing information for calls utilizing 800 and 888 toll free dialing numbers. The Toll Free Database will be expanded, as required, at a later date to include routing for 877, 866, 855, 844, 833, and 822 toll free dialing numbers. Until that time, toll free calls, other than those originated as 1+800 or 1+888, will not be completed.

Transit Network Selection (TNS)

The Transit Network Selection (TNS) parameter is a component of the SS7 Initial Address Message (IAM). It contains the Carrier Identification Code (CIC) and Circuit Code which indicate the specific Interexchange Carrier trunk group that is required to carry the call. The Circuit Code equates to the OZZ with MF Signalling.

© 2022 Frontier Communications Parent, Inc. All rights reserved

2. General Regulations (Cont'd)

2.6 Definitions (Cont'd)

Transmission Measuring (105 Type) Test Line/Responder

The term "Transmission Measuring (105 Type) Test Line/Responder" denotes an arrangement in an end office which provides far-end access to a responder and permits two-way loss and noise measurements to be made on trunks from a near end office.

Transmission Path

The term "Transmission Path" denotes an electrical path capable of transmitting signals within the range of the service offering, e.g., a voice grade transmission path is capable of transmitting voice frequencies within the approximate range of 300 to 3000 Hz. A transmission path is comprised of physical or derived channels consisting of any form or configuration of facilities typically used in the telecommunications industry.

Transport Element

The term "Transport Element" denotes a generic term to refer to either Directory Transport or Local Transport as applicable.

Trunk-Side Connection

The term "Trunk-Side Connection" denotes the connection of a transmission path to the trunk side of a local exchange switching system.

Two-Wire to Four-Wire Conversion

The term "Two-Wire to Four-Wire Conversion" denotes an arrangement which converts a four-wire transmission path to a two-wire transmission path to allow a four-wire facility to terminate in a two-wire entity (e.g., a central office switch).

Uniform Service Order Code

The term "Uniform Service Order Code" denotes a three or five character alphabetic, numeric, or an alphanumeric code that identifies a specific item of service or equipment. Uniform Service Order Codes are used in the Telephone Company billing system to generate recurring rates and nonrecurring charges.

© 2022 Frontier Communications Parent, Inc. All rights reserved

2. General Regulations (Cont'd)

2.6 Definitions (Cont'd)

V and H Coordinates Method

The term "V and H Coordinates Method" denotes a method of computing airline miles between two points by utilizing an established formula which is based on the vertical and horizontal coordinates of the two points.

Virtual Call

A user facility in which a call initiation procedure and a call terminating procedure determines a period of communication between two network addresses in which a user data is transferred.

Virtual Circuit

Logical channels established as a result of the call initiation procedure to a network address that exists for a period of time.

Virtually-Collocated Interconnection

An arrangement whereby the Collocator's facilities are interconnected to Collocator-provided Telephone Company-owned cable and equipment that is located in a Telephone Company central office building.

WATS Serving Office (WSO)

The term "WATS Serving Office" (WSO) denotes Wire Centers with the technical capability to accept WATS Access Connections (WACs) or WAC extensions.

Wire Center

The term "Wire Center" denotes a building in which one or more central offices, used for the provision of Telephone Exchange Services, are located.

(X) Issued under authority of Special Permission No. 11-021.

© 2022 Frontier Communications Parent, Inc. All rights reserved

2. General Regulations (Cont'd)

2.7 Service Level Agreements

2.7.1 Basic Service Level Agreements (Basic SLAs)

Regulations pertaining to Basic SLAs are contained in this Guide as specified following:

Description	Tariff Reference
Credit Allowance for Service Interruptions	2.7.1(A)

(D

(A) Credit Allowance for Service Interruptions

(1) General

A service is interrupted when it becomes unusable to the customer because of a failure of a facility component used to furnish service under this Guide. An interruption period starts when the Telephone Company personnel are notified by the customer that the service is inoperative.

(2) When a Credit Allowance Applies

Subject to Section 2.7.4(B) following, in case of an interruption to any service, credit allowance for the period of interruption shall be as follows:

(a) For services other than those mentioned in 9.4(I)(1), (2), and (3), credits for interruption shall be:

© 2023 Frontier Communications Parent, Inc. All rights reserved

2. General Regulations (Cont'd)

2.7 Service Level Agreements (Cont'd)

2.7.1 Basic Service Level Agreements (Basic SLAs) (Cont'd)

(A) Credit Allowance for Service Interruptions (Cont'd)

(2) When a Credit Allowance Applies (Cont'd)

(a) (Cont'd)

(ii) Special Access, or Packet Data Services

No credit shall be allowed for an interruption of less than thirty (30) minutes except for Dedicated SONET services, and Program Audio and Video Service provided at daily rates. When service is interrupted for 30 minutes or more, credit is allowed for the portion of the service affected in 1/2 hourly multiples for each 1/2 hour period or major fraction thereof of interruption. Each interruption in excess of 15 minutes and up to 30 minutes will result in a 30 minute credit being applied. The amount of credit is the proportionate part of the monthly charge, based on 24 hour daily service.

© 2022 Frontier Communications Parent, Inc. All rights reserved

2. General Regulations (Cont'd)

2.7 Service Level Agreements (Cont'd)

2.7.1 Basic Service Level Agreements (Basic SLAs) (Cont'd)

(A) Credit Allowance for Service Interruptions (Cont'd)

(2) When a Credit Allowance Applies (Cont'd)

(a) (Cont'd)

(ii) Special Access or Packet Data Services (Cont'd)

© 2022 Frontier Communications Parent, Inc. All rights reserved

2. General Regulations (Cont'd)

2.7 Service Level Agreements (Cont'd)

2.7.1 Basic Service Level Agreements (Basic SLAs) (Cont'd)

(A) Credit Allowance for Service Interruptions (Cont'd)

(2) When a Credit Allowance Applies (Cont'd)

(a) (Cont'd)

(ii) Special Access or Packet Data Services (Cont'd)

For Program Audio Service and Video Service provided at daily rates, no credit shall be allowed for an interruption of less than 30 seconds. The customer shall be credited for an interruption of 30 seconds or more at the rate of 1/288 of the daily charge for the service for each 5 minutes or fraction thereof that an interruption continues. Two or more such interruptions occurring during a period of 5 consecutive minutes shall be considered as one interruption.

© 2022 Frontier Communications Parent, Inc. All rights reserved

2. General Regulations (Cont'd)

2.7 Service Level Agreements (Cont'd)

2.7.1 Basic Service Level Agreements (Basic SLAs) (Cont'd)

(A) Credit Allowance for Service Interruptions (Cont'd)

(2) When a Credit Allowance Applies (Cont'd)

For certain Special Access services (Wideband Data, WD1-3, Digital Data Access, DA1-4, High Capacity, HC1), and for Switched Transport, any period during which the error performance is below that specified for the service will be considered as an interruption.

(e) For Lightwave Facilities, no credit shall be allowed for any interruption not reported by the customer; an interruption of less than 48 hours from the time of the customer's trouble report; or any interruption resulting from equipment furnished by the customer.

(f) For certain Special Access services, a Special Access Service Guarantee (SASG) credit allowance will apply in the event that such services experience a service interruption of four (4) or more consecutive hours except as specified in Section 2.7.4(B) following. The SASG credit allowance will apply to Voice Grade, WATS, Metallic, Telegraph, monthly Program Audio and Video, Wideband Data, Wideband Analog, Digital Data (DDS), and High Capacity DS1 & DS3 Special Access services (collectively, Special Access Services).

© 2022 Frontier Communications Parent, Inc. All rights reserved

2. General Regulations (Cont'd)

2.7 Service Level Agreements (Cont'd)

2.7.1 Basic Service Level Agreements (Basic SLAs) (Cont'd)

(A) Credit Allowance for Service Interruptions (Cont'd)

(2) When a Credit Allowance Applies (Cont'd)

(f) (Cont'd)

Additionally, the SASG credit allowance applies to Reconfigure Service ports when a customer, during normal hours (see 7.2.12 , Scheduled Maintenance), is unable to reconfigure circuits for two or more hours.

If a Special Access Service or Reconfigure Service port is eligible for an SASG credit allowance, the Telephone Company shall provide the applicable credit amount as set forth in the table following. The Telephone Company shall bill customer the applicable monthly rate for the Special Access Service or Reconfigure Service port, and if customer is eligible to receive the SASG credit allowance, the customer shall receive the SASG credit in a later invoice. The SASG credit allowance is in addition to any other credit allowances available under this Section 2.7.1(A). The maximum amount of all credit allowances available under this Section 2.7.1(A) for a Special Access Service or Reconfigure Service port for a given billing period shall not exceed the total applicable monthly charge paid by the customer for such Special Access Service or Reconfigure Service port. The monthly charge will consist of all applicable rate elements charged to the circuit experiencing the service interruption. The SASG credit allowance can only be applied once per month on a per circuit or per port basis. For multi-point circuits, the SASG credit allowance will apply to each leg of the circuit that experiences a service interruption.

© 2022 Frontier Communications Parent, Inc. All rights reserved

2. General Regulations (Cont'd)

2.7 Service Level Agreements (Cont'd)

2.7.1 Basic Service Level Agreements (Basic SLAs) (Cont'd)

(A) Credit Allowance for Service Interruptions (Cont'd)

(2) When a Credit Allowance Applies (Cont'd)

(f) (Cont'd)

The SASG credit allowance for each applicable service is listed below:

Service	SASG (per circuit)
Metallic	$10.00
Telegraph, Voice Grade & WATS	
2-wire	20.00
4-wire	20.00
Program Audio (monthly)	
200-3500 Hz	10.00
100-5000 Hz	15.00
50-8000 Hz	20.00
50-15000 Hz	25.00
Video (monthly & 5-yr Plan)	100.00
Wide Band Analog & Data	100.00
Digital Data/DDS	
2.4 Kbps	40.00
4.8 Kbps	45.00
9.6 Kbps	50.00
9.2 Kbps	55.00
56.0 Kbps	60.00
64.0 Kbps	65.00
High Capacity	
DS1	160.00
DS3	400.00
	SASG (per port)
Reconfigure Service	
VG or DDS	10.00
DS1	10.00

© 2022 Frontier Communications Parent, Inc. All rights reserved

2. General Regulations (Cont'd)

2.7 Service Level Agreements (Cont'd)

2.7.1 Basic Service Level Agreements (Basic SLAs) (Cont'd)

(A) Credit Allowance for Service Interruptions (Cont'd)

(2) When a Credit Allowance Applies (Cont'd)

(g) For the following Dedicated SONET services, the credit allowances are:

(i) Dedicated SONET Ring (DSR) and Dedicated SONET Shared Assurance Network (DSSAN) are guaranteed to have uninterrupted service. Any service outage greater than one minute due solely to a Telephone Company facility failure will result in a credit of 100% of the monthly rate for the applicable rate elements of the affected service. Only one such credit is allowed in a single month's billing period.

When DSR as set forth in Section 23.1 following is arranged with subtending rings, a credit allowance for a service interruption is applied independently to each ring. For example, if the main DSR becomes interrupted and is eligible for a credit allowance, no credit allowance is due on the subtending ring(s) associated with that main ring unless service on the subtending ring(s) is also interrupted.

(ii) Dedicated SONET Shared Dual Path, DSSDP, guarantees service delivery without interruptions. Should a service with ISDP be interrupted for more than one minute due to failures in the Telephone Company's facilities, the customer will be credited 100% of the monthly rates for the affected underlying service with the ISDP feature and for the ISDP optional feature. Only one such credit is allowed per month.

Service failures due to customer provided equipment will not be covered by the service guarantee under any circumstances.

© 2022 Frontier Communications Parent, Inc. All rights reserved

2. General Regulations (Cont'd)

2.7 Service Level Agreements (Cont'd)

2.7.1 Basic Service Level Agreements (Basic SLAs) (Cont'd)

(A) Credit Allowance for Service Interruptions (Cont'd)

(2) When a Credit Allowance Applies (Cont'd)

(h) For certain video services, the following SASG credit allowances apply:

(i) For any service outage of a Video Switch greater than a period of 30 consecutive minutes, a credit for 50% of the monthly rate is applicable. The SASG will not apply to more than two service outages per month.

(ii) For a service outage of the 10-year Multichannel Video Service of 60 consecutive minutes or more, a SASG credit for 50% of the monthly rate for the affected channels will be applied. The SASG will not apply to more than two such outages per month.

(i) For Dedicated SONET Entrance Facilities (DSEF) and both Switched and Special Dedicated SONET Shared Single Path (DSSSP) services, the following Special Access Service Guarantee, SASG, credit allowance applies:

Any service outage of 4 hours or more due to a Company facility failure will result in a credit of 100% of the monthly rate for the applicable rate elements affected. Only one such credit is allowed in a single month's billing period.

(j) For Dedicated SONET Broadband Transport (DSBT) Services, the following Special Access Service Guarantee, SASG, credit allowances apply:

Any outage of basic DSBT services of 4 hours or more due to a Company facility failure will result in a credit of 100% of the monthly rate for the service.

Any outage of DSBT services with Fiber Path Diversity option of 1 hour or more due to a Company facility failure will result in a credit of 100% of the monthly rate for the service.

SASG credits cannot exceed the monthly charge in a single month's billing period.

© 2022 Frontier Communications Parent, Inc. All rights reserved

2. General Regulations (Cont'd)

2.7 Service Level Agreements (Cont'd)

2.7.1 Basic Service Level Agreements (Basic SLAs) (Cont'd)

(A) Credit Allowance for Service Interruptions (Cont'd)

(2) When a Credit Allowance Applies (Cont'd)

(k) For those services provided in rate bands, only one credit is allowed in a single month's billing period. Credits for DS3 Entrance Facility Channel Terminations and DS3 High Capacity Service Channel Terminations will be based upon the rate effective and rate band applicable to the customer at the time of service failure.

(l) For Dedicated SONET Optical Transport Service (DSOTS) nodes and network optimization, any single service outage of four hours or more due solely to a Telephone Company facility failure will result in a credit of 100 percent (100%) of the monthly rate for the applicable DSOTS node or network optimization device affected. Only one such credit is allowed in a single month’s billing period.

For DSOTS optical transport channels, the following credits will be applied.

- For protected Optical Transport Channels, any Telephone Company facility failure which is not restored within 1 minute will result in a credit of 100% of the monthly rate for the applicable protected optical channel affected. Only one such credit is allowed in a single month’s billing period.

- For unprotected optical transport channels, no credit applies for a service outage on these channels for which no protection is provided by the Telephone Company.

- When one or more channels utilizing a multi-port interface card require maintenance, all channels provisioned over that multi-port interface card will be interrupted. No credit will be made for such periods during which all channels on the multi-port interface card are interrupted to allow the Telephone Company to perform required maintenance.

© 2022 Frontier Communications Parent, Inc. All rights reserved

2. General Regulations (Cont'd)

2.7 Service Level Agreements (Cont'd)

2.7.1 Basic Service Level Agreements (Basic SLAs) (Cont'd)

(A) Credit Allowance for Service Interruptions (Cont'd)

(2) When a Credit Allowance Applies (Cont'd)

(m) For Ethernet Private Line, the Special Access Service Guarantee (SASG) will apply for the entire service.

- For protected On-Net Channel Extensions and ON-Net Channel Mileage, a credit of 100% of one month's recurring charge for the Ethernet Private Line service will apply for any outage that exceeds one minute. No more than one such credit is given in 1 monthly billing cycle.

- For unprotected On-Net Channel Extensions a credit of 100% of one month's recurring charge for the Ethernet Private Line service will apply if the total outage time exceeds 4 hours.

- For Ethernet Private Line services that consist of both unprotected and protected service components, the credit allowance that applies for each outage will be based on the credit allowance provisions for unprotected channels.

© 2022 Frontier Communications Parent, Inc. All rights reserved

2. General Regulations (Cont'd)

2.7 Service Level Agreements (Cont'd)

2.7.1 Basic Service Level Agreements (Basic SLAs) (Cont'd)

(A) Credit Allowance for Service Interruptions (Cont'd)

(3) When A Credit Allowance Does Not Apply

Services will not be eligible for credits when any of the conditions set forth in Section 2.7.4 following exist.

(4) Use of an Alternative Service Provided by the Telephone Company

Should the customer elect to use an alternative service provided by the Telephone Company during the period that a service is interrupted, the customer must pay the tariffed rates and charges for the alternative service used.

(5) Temporary Surrender of a Service

In certain instances, the customer may be requested by the Telephone Company to surrender a service for purposes other than maintenance, testing or activity relating to a service order. If the customer consents, a credit allowance will be granted. The credit allowance will be 1/1440 of the monthly rate for each period of 30 minutes or fraction thereof that the service is surrendered. In no case will the credit allowance exceed the monthly rate for the service surrendered in any one monthly billing period.

© 2022 Frontier Communications Parent, Inc. All rights reserved

2. General Regulations (Cont'd)

2.7 Service Level Agreements (Cont'd)

2.7.1 Basic Service Level Agreements (Basic SLAs) (Cont'd)

(B) Reserved For Future Use (C)

© 2023 Frontier Communications Parent, Inc. All rights reserved

2. General Regulations (Cont'd)

2.7 Service Level Agreements (Cont'd)

2.7.2 Enhanced Service Level Agreements (Enhanced SLAs)

Regulations pertaining to Enhanced SLAs are contained in this Guide as specified following:

Description	Guide Reference
Integrated Optical Service Rider SLAs	2.7.2(A)

(A) Integrated Optical Service Rider SLAs

(1) General

(a) With the exception of those Integrated Optical Service Riders provided subject to Section 24.1.3 following, the SLAs set forth in this Section 2.7.2(A) apply to all other Integrated Optical Service Riders set forth in Section 24.1 following ("Qualifying Services").

(b) The monthly recurring rate(s) for the Qualifying Service are the Integrated Optical Service Rider Appearances.

(c) To receive credit, the Telephone Company must receive from the customer a written request for credit within sixty (60) calendar days of the end of the calendar month in which the SLA threshold was missed. The customer's request for credit must be submitted to the appropriate Telephone Company in a manner mutually agreed upon by the Telephone Company and the customer. The request must include a list of the identification numbers of all impacted circuits.

(2) Availability

(a) Availability refers to the percentage of time over a calendar month that a Qualifying Service is able to transmit data over the Telephone Company's integrated optical service. A Qualifying Service is unavailable if data cannot be transmitted because of a failure of a facility component within the Telephone Company's integrated optical service that is used to furnish the Qualifying Service provided under this Guide.

© 2022 Frontier Communications Parent, Inc. All rights reserved

2. General Regulations (Cont'd)

2.7 Service Level Agreements (Cont'd)

2.7.2 Enhanced Service Level Agreements (Enhanced SLAs) (Cont'd)

(A) Integrated Optical Service Rider SLAs (Cont'd)

(2) Availability (Cont'd)

(b) Availability is calculated as follows: Availability = (1440 X Number of Days in Month) – (Number of Minutes the Service is unavailable during Month)/(1440 X Number of Days in Month). The number of minutes the Service is unavailable is as determined by the Telephone Company.

(c) The Telephone Company threshold for Availability under this Section in a calendar month is 99.999%.

If Availability under this Section is less than the threshold, then a credit equal to twenty-five percent (25%) of the monthly recurring rate(s) for the affected Qualifying Service applies. Only one (1) such credit is allowed in a single month's billing period.

(3) Mean Time to Restore (MTTR)

(a) MTTR applies to an interruption of service that is within the Telephone Company's integrated optical service.

(b) Interruption of service is defined as a condition which renders a Qualifying Service unusable to the customer (i.e., data cannot be transmitted) because of a failure of a facility within the Telephone Company's integrated optical service that is used to furnish the Qualifying Service under this Guide. The Telephone Company will initiate a trouble ticket on all DS1 Qualifying Service interruptions reported by the customer. The Telephone Company will initiate a trouble ticket on all DS3 Qualifying Service interruptions reported by the customer and/or detected by the Telephone Company's network.

© 2022 Frontier Communications Parent, Inc. All rights reserved

2. General Regulations (Cont'd)

2.7 Service Level Agreements (Cont'd)

2.7.2 Enhanced Service Level Agreements (Enhanced SLAs) (Cont'd)

(A) Integrated Optical Service Rider SLAs (Cont'd)

(3) Mean Time to Restore (MTTR) (Cont'd)

(c) MTTR for a calendar month shall be the average of all Time to Restore (TTR), as calculated by the Telephone Company. The TTR is the period of time the Qualifying Service is unavailable between the opening and closing of the trouble ticket, minus any stop clock time that was logged against the trouble ticket. Stop clock time includes, by way of example, the following times:

- Periods when customer testing is occurring.
- Periods when the customer is working on its own Customer Premises Equipment (CPE) and has not yet released the Qualifying Service to the Telephone Company for maintenance, testing or repair.
- Periods when the Telephone Company is awaiting customer authorization to commence work on the Qualifying Service.
- Periods when the Telephone Company is denied access to premises or facilities necessary to diagnose, repair, or test a Qualifying Service.
- Periods following repair of the Qualifying Service when the ticket is held open by the customer to ensure the trouble is resolved.

MTTR is calculated by summing TTR for all measured tickets for the customer for the calendar month and dividing by the total number of tickets for that customer during that month.

© 2022 Frontier Communications Parent, Inc. All rights reserved

2. General Regulations (Cont'd)

2.7 Service Level Agreements (Cont'd)

2.7.2 Enhanced Service Level Agreements (Enhanced SLAs) (Cont'd)

(A) Integrated Optical Service Rider SLAs (Cont'd)

(3) Mean Time to Restore (MTTR) (Cont'd)

(e) MTTR excludes any subsequent reports (i.e., additional customer inquiries while the trouble is pending), CPE troubles, trouble found on the customer's side of the point of demarcation, no trouble found, troubles closed due to customer action, force majeure events, and troubles repaired by the Telephone Company prior to receipt of a trouble report on that Qualifying Service.

(f) The threshold for MTTR in a calendar month is 2.5 hours for Qualifying Services.

(g) If the MTTR is greater than 2.5 hours over the calendar month for all of customer's Qualifying Services, then a credit equal to twenty-five percent (25%) of the monthly recurring rate(s) for the affected Qualifying Service applies for those Qualifying Services that were the subject of a trouble ticket during the measured calendar month whose TTR exceeded 2.5 hours. Only one (1) such credit is allowed in a single month's billing period. If the MTTR is 2.5 hours or less on all of customer's Qualifying Services, then no credit applies to any Qualifying Service, even if the TTR on a particular Qualifying Service exceeded such threshold.

(4) Qualifying Services will not be included in threshold measurements under this Section 2.7.2(A) and will not be eligible for credits under this Section 2.7.2(A), when any of the conditions set forth in Section 2.7.4 following exist.

© 2022 Frontier Communications Parent, Inc. All rights reserved

2. General Regulations (Cont'd)

2.7 Service Level Agreements (Cont'd)

2.7.2 Enhanced Service Level Agreements (Enhanced SLAs) (Cont'd)

© 2022 Frontier Communications Parent, Inc. All rights reserved

2. General Regulations (Cont'd)

2.7 Service Level Agreements (Cont'd)

2.7.2 Enhanced Service Level Agreements (Enhanced SLAs) (Cont'd)

© 2022 Frontier Communications Parent, Inc. All rights reserved

2. General Regulations (Cont'd)

2.7 Service Level Agreements (Cont'd)

2.7.2 Enhanced Service Level Agreements (Enhanced SLAs) (Cont'd)

© 2022 Frontier Communications Parent, Inc. All rights reserved

2. General Regulations (Cont'd)

2.7 Service Level Agreements (Cont'd)

2.7.2 Enhanced Service Level Agreements (Enhanced SLAs) (Cont'd)

© 2022 Frontier Communications Parent, Inc. All rights reserved

2. General Regulations (Cont'd)

2.7 Service Level Agreements (Cont'd)

2.7.2 Enhanced Service Level Agreements (Enhanced SLAs) (Cont'd)

© 2022 Frontier Communications Parent, Inc. All rights reserved

2. General Regulations (Cont'd)

2.7 Service Level Agreements (Cont'd)

2.7.2 Enhanced Service Level Agreements (Enhanced SLAs) (Cont'd)

© 2022 Frontier Communications Parent, Inc. All rights reserved

2. General Regulations (Cont'd)

2.7 Service Level Agreements (Cont'd)

2.7.2 Enhanced Service Level Agreements (Enhanced SLAs) (Cont'd)

© 2022 Frontier Communications Parent, Inc. All rights reserved

2. General Regulations (Cont'd)

2.7 Service Level Agreements (Cont'd)

2.7.2 Enhanced Service Level Agreements (Enhanced SLAs) (Cont'd)

© 2022 Frontier Communications Parent, Inc. All rights reserved

2. General Regulations (Cont'd)

2.7 Service Level Agreements (Cont'd)

2.7.2 Enhanced Service Level Agreements (Enhanced SLAs) (Cont'd)

© 2022 Frontier Communications Parent, Inc. All rights reserved

2. General Regulations (Cont'd)

2.7 Service Level Agreements (Cont'd)

2.7.2 Enhanced Service Level Agreements (Enhanced SLAs) (Cont'd)

© 2022 Frontier Communications Parent, Inc. All rights reserved

2. General Regulations (Cont'd)

2.7 Service Level Agreements (Cont'd)

2.7.2 Enhanced Service Level Agreements (Enhanced SLAs) (Cont'd)

© 2022 Frontier Communications Parent, Inc. All rights reserved

2. General Regulations (Cont'd)

2.7 Service Level Agreements (Cont'd)

2.7.3 National Service Level Agreements (National SLAs)

© 2022 Frontier Communications Parent, Inc. All rights reserved

2. General Regulations (Cont'd)

2.7 Service Level Agreements (Cont'd)

2.7.3 National Service Level Agreements (National SLAs) (Cont'd)

© 2022 Frontier Communications Parent, Inc. All rights reserved

2. General Regulations (Cont'd)

2.7 Service Level Agreements (Cont'd)

2.7.3 National Service Level Agreements (National SLAs) (Cont'd)

© 2022 Frontier Communications Parent, Inc. All rights reserved

2. General Regulations (Cont'd)

2.7 Service Level Agreements (Cont'd)

2.7.3 National Service Level Agreements (National SLAs) (Cont'd)

© 2022 Frontier Communications Parent, Inc. All rights reserved

2. General Regulations (Cont'd)

2.7 Service Level Agreements (Cont'd)

2.7.3 National Service Level Agreements (National SLAs) (Cont'd)

© 2022 Frontier Communications Parent, Inc. All rights reserved

2. General Regulations (Cont'd)

2.7 Service Level Agreements (Cont'd)

2.7.3 National Service Level Agreements (National SLAs) (Cont'd)

© 2022 Frontier Communications Parent, Inc. All rights reserved

2. General Regulations (Cont'd)

2.7 Service Level Agreements (Cont'd)

2.7.3 National Service Level Agreements (National SLAs) (Cont'd)

.

© 2022 Frontier Communications Parent, Inc. All rights reserved

2. General Regulations (Cont'd)

2.7 Service Level Agreements (Cont'd)

2.7.3 National Service Level Agreements (National SLAs) (Cont'd)

© 2022 Frontier Communications Parent, Inc. All rights reserved

2. General Regulations (Cont'd)

2.7 Service Level Agreements (Cont'd)

2.7.3 National Service Level Agreements (National SLAs) (Cont'd)

© 2022 Frontier Communications Parent, Inc. All rights reserved

2. General Regulations (Cont'd)

2.7 Service Level Agreements (Cont'd)

2.7.3 National Service Level Agreements (National SLAs) (Cont'd)

© 2022 Frontier Communications Parent, Inc. All rights reserved

2. General Regulations (Cont'd)

2.7 Service Level Agreements (Cont'd)

2.7.3 National Service Level Agreements (National SLAs) (Cont'd)

© 2022 Frontier Communications Parent, Inc. All rights reserved

2. General Regulations (Cont'd)

2.7 Service Level Agreements (Cont'd)

2.7.3 National Service Level Agreements (National SLAs) (Cont'd)

© 2022 Frontier Communications Parent, Inc. All rights reserved

2. General Regulations (Cont'd)

2.7 Service Level Agreements (Cont'd)

2.7.4 When a Credit Allowance Does Not Apply

(A) Reserved For Future Use (C)

© 2023 Frontier Communications Parent, Inc. All rights reserved

2. General Regulations (Cont'd)

2.7 Service Level Agreements (Cont'd)

2.7.4 When a Credit Allowance Does Not Apply (Cont'd)

(A) Reserved For Future Use (C)

© 2023 Frontier Communications Parent, Inc. All rights reserved

2. General Regulations (Cont'd)

2.7 Service Level Agreements (Cont'd)

2.7.4 When a Credit Allowance Does Not Apply (Cont'd)

(B) Service Interruptions/Mean Time to Restore/Availability

This Section 2.7.4(B) applies to and supplements Section 2.7.1(A) preceding, Credit Allowance for Service Interruptions, Section 2.7.2 preceding, Enhanced Service Level Agreements. Services will not be included in performance measurements and credits will not apply:

(1) When the customer fails to report the interruption to the Telephone Company (excluding DS3 Integrated Optical Service Riders); or

(2) When the interruption was caused by the act or omission of the customer or a party authorized by the customer to use the service; or

(3) When the interruption was due to the failure of power, equipment, service, or systems provided by the customer or persons other than the Telephone Company; or

(4) For any period in which the Telephone Company is not afforded access to the premises where the service is terminated; or

(5) When the customer has released the service to the Telephone Company for maintenance purposes, to make rearrangements, or for the implementation of an order for a change in the service, during the time that was negotiated with the customer prior to the release of that service (thereafter, a credit allowance as set forth in this Section 2.7 applies); or

(6) For any period of scheduled maintenance or scheduled downtime where the customer has received prior notification from the Telephone Company; or

© 2022 Frontier Communications Parent, Inc. All rights reserved

2. General Regulations (Cont'd)

2.7 Service Level Agreements (Cont'd)

2.7.4 When a Credit Allowance Does Not Apply (Cont'd)

(B) Service Interruptions/Mean Time to Restore/Availability (Cont'd)

(7) When interruptions occur or continue because of the failure of the customer to authorize the replacement of any element of special construction, as set forth in the Interstate Special Construction Tariffs as mentioned in Section 1.5 preceding; or

(8) For periods when the customer elects not to release the service for testing and/or repair; or

(9) For periods of temporary discontinuance as set forth in Section 2.2.1(B) preceding; or

(10) When an interruption is required, permitted or excused by this Guide; or

(11) For interruptions, failures or delays due to acts of God or the public enemy, compliance with any law or any regulation or order of any governmental authority, acts of terrorism, war, rebellion, insurrection or sabotage or damage resulting there from, fires, floods, earthquakes, volcanic action, unusually severe weather, explosions, washouts, rules and regulations with regard to common carriers, accidents, epidemics, riots, strikes or other concerted acts of employees, whether direct or indirect, lockouts or other industrial disturbances, whether direct or indirect, worms, viruses or other contaminants that may cause damage to or disable software, computer or electronic systems, or any similar cause, or other causes beyond the Telephone Company's reasonable control (except that, this Section 2.7.4(B)(11) does not apply to Section 2.7.1(A), excluding the SASG as set forth in Section 2.7.1(A)(2)(f), to which this Section 2.7.4(B)(11) shall apply; or

(12) For an interruption, or a group of interruptions resulting from a common cause, for amounts less than five dollars; or

(13) For an interruption or a group of interruptions on switched access service during a billing period when the customer's usage exceeds the minimum requirements; or

(14) For any interruption of LAN Extension Service.

© 2022 Frontier Communications Parent, Inc. All rights reserved

2. General Regulations (Cont'd)

2.8 Sale or Transfer of an Operating Telephone Company's Assets and/or Stock to an Unaffiliated Third Party

This Section 2.8 shall apply: (i) if the Telephone Company sells or transfers all or a portion of the assets or stock of an Operating Telephone Company (e.g., Frontier West Virginia Inc.) to an unaffiliated third party ("**Transfer**"); and (ii) a service offering or Service Level Agreement (SLA) of this Guide as referenced in this Section 2.8 does not include terms and conditions relating to a Transfer.

2.8.1 General

The terms and conditions set forth in Section 2.8.2 following shall apply:

(A) when a customer subscribes to a service offering under this Guide that aggregates the customer's purchases from the Telephone Company to measure compliance with such service offering or the customer participates in a SLA that aggregates the customer's measured transactions, and:

(B) the service offering or SLA does not include terms and conditions pertaining to a Transfer; and

(C) as a result of the Transfer, one or more of the following conditions occur solely as a result of the Telephone Company no longer providing the same quantity of services:

(1) the customer no longer satisfies the minimum requirements of the service offering or SLA;
(2) the customer is subject to a related penalty, termination liability or cancellation;
(3) the customer is subject to a change in the tier of a volume table or a rate table; and
(4) the customer is subject to a change in the rate level of the service offering.

© 2022 Frontier Communications Parent, Inc. All rights reserved

2. General Regulations (Cont'd)

2.8 Sale or Transfer of an Operating Telephone Company's Assets and/or Stock to an Unaffiliated Third Party (Cont'd)

2.8.2 Undertaking of the Telephone Company Following a Transfer

When the conditions set forth in 2.8.1 preceding exist, the Telephone Company will utilize the following terms and conditions, as applicable.

(A) If the service offering includes specific minimum ordering requirements for participation, or requires that the customer achieve a minimum number of services, minimum number of rate elements, and/or minimum revenue within a specific geographic area in order to continue its subscription to the service offering or participation in a pricing plan for such service offering (each, a **Minimum Requirement**), the Telephone Company will apply the terms and conditions of this Section 2.8.2(A). The following service offerings have Minimum Requirements that are subject to this Section 2.8.2(A):

- Dedicated SONET Shared Assurance Network as set forth in Sections 6.8.25(C)(2) and 7.2.14(C)(3) following
- 56 kbps Digital Data Service Rate Stability Plan as set forth in Section 7.4.17(G) following
- 4.8 kbps Digital Data Service Rate Stability Plan as set forth in Section 7.4.17(H) following
- Directory Assistance Service as set forth in Section 9 following
- InterLATA Operator Services as set forth in Section 13.3.13 following
- Call Management Signaling Service as set forth in Section 20.1.2 following
- TCP/IP Data Aggregation Service as set forth in Section 22.1 following

In the event of a Transfer, the following applies.

(1) The Telephone Company will, consistent with the service offering, determine if the customer satisfies the Minimum Requirement for the service offering with the reduced quantity of services the Telephone Company provides to the customer following the Transfer; and

© 2022 Frontier Communications Parent, Inc. All rights reserved

2. General Regulations (Cont'd)

2.8 Sale or Transfer of an Operating Telephone Company's Assets and/or Stock to an Unaffiliated Third Party (Cont'd)

2.8.2 Undertaking of the Telephone Company Following a Transfer (Cont'd)

(A) (Cont'd)

(2) if the customer does not satisfy the Minimum Requirement following the Transfer, determine if the customer would have satisfied the Minimum Requirement had the Transfer not occurred. If the customer would have satisfied the Minimum Requirement had the Transfer not occurred, then no further action shall be taken and the customer will be considered to have satisfied the Minimum Requirement. If the customer would not have satisfied the Minimum Requirement had the Transfer not occurred, then the terms and conditions for such result shall apply under the applicable service offering, except that the calculation of any penalty associated with not satisfying the Minimum Requirement shall be reduced pro-rata to reflect the Transfer. Upon renewal of the customer's commitment period for such service offering or subsequent subscription to such service offering, as applicable, the terms and conditions set forth in the applicable section(s) of this the tariff shall apply, including satisfying the Minimum Requirement for such service offering using only the quantity of services the customer purchases from the Telephone Company at the time of renewal or subsequent subscription.

For example, assume Frontier West Virginia Inc transfers a portion of its assets to an unaffiliated third party. Further assume that a customer subscribes to Call Management Signaling Service under Section 20.1.2 following which has a minimum monthly billing of one million (1,000,000) call signals per month. Also assume that following the Transfer, the volume of call signals recorded for the customer at the next scheduled review is nine hundred fifty thousand (950,000), and that an estimated one hundred thousand (100,000) call signals were associated with the services transferred to the unaffiliated third party. In this case, the Telephone Company would determine if the customer would have satisfied the minimum number of call signals had the Transfer not occurred by adding (i) the estimated number of call signals associated with the services transferred to the unaffiliated third party and; (ii) the recorded number of call signals for the period of review [950,000 + 100,000 = 1,050,000 call signals]. Based on this calculation, the customer would have satisfied the Minimum Requirement and will not incur any shortfall charges. However, if the result of such calculation was that the customer still did not satisfy the Minimum Requirement for the service, then the terms and conditions for such result shall apply under Section 20.1.2 following, except that the calculation of shortfall charges shall be reduced pro-rata to reflect the Transfer.

© 2022 Frontier Communications Parent, Inc. All rights reserved

2. General Regulations (Cont'd)

2.8 Sale or Transfer of an Operating Telephone Company's Assets and/or Stock to an Unaffiliated Third Party (Cont'd)

2.8.2 Undertaking of the Telephone Company Following a Transfer (Cont'd)

(B) If the service offering requires that the customer commit a minimum number of the services or rate elements that the customer purchases from the Telephone Company and maintain such minimum during the term of the service offering (a **Commitment Level**), and the service offering does not apply rates or credits based on a volume based tier structure, the Telephone Company will apply this Section 2.8.2(B). The following service offerings have Commitment Levels that are subject to this Section 2.8.2(B).

- Facilities Management Service as set forth in Sections 6.8.26 and 7.2.13 following.

- Voice Grade Rate Stability Plan as set forth in Section 7.4.12 following

In the event of a Transfer, the following applies.

(1) The Telephone Company will recalculate the Commitment Level for the duration of the current term to reflect the removal of the services the Telephone Company no longer provides to the customer solely as a result of the Transfer; and

(2) use the reduced Commitment Level in all subsequent reviews/true-ups that measure the customer's compliance with established requirements for the service offering for the balance of the current term unless otherwise revised by: (i) the customer in accordance with the terms and conditions of the service offering; or (ii) the terms and conditions of such service offering. Upon renewal of the customer's term for such service offering, the terms and conditions set forth in the applicable section(s) of this Guide shall apply, including establishment of a new Commitment Level using only the quantity of services the customer purchases from the Telephone Company at the time of renewal.

© 2022 Frontier Communications Parent, Inc. All rights reserved

2. General Regulations (Cont'd)

2.8 Sale or Transfer of an Operating Telephone Company's Assets and/or Stock to an Unaffiliated Third Party (Cont'd)

2.8.2 Undertaking of the Telephone Company Following a Transfer (Cont'd)

(B) (Con'd)

For example, assume Frontier West Virginia Inc. transfers a portion of its assets to an unaffiliated third party. Further assume that a customer with a Switched Access Facilities Management Service plan for its DS1 Services and a Commitment Level of one hundred twenty (120) DS1 channel terminations is short of its Commitment Level at the next scheduled annual review by thirty-five (35) channel terminations (i.e., the customer has eighty-five (85) channel terminations at the annual review). Also assume that thirty (30) DS1 channel terminations were transferred to an unaffiliated third party as a result of the Transfer, the result of which is the Telephone Company reducing the customer's Commitment Level to ninety (90) channel terminations (120 channel terminations – 30 channel terminations = 90 channel terminations). Since the customer is still short of its Commitment Level by five (5) channel terminations, the customer may, consistent with the service offering, either: (i) buy down the Commitment Level; (ii) pay a shortfall charge; or (iii) apply time-in-service credits to offset the five (5) DS1 channel termination shortfall.

(C) If the service offering applies rates or credits based on a volume-based tier structure, the Telephone Company will apply this Section 2.8.2(C). The following service offering has a volume-based tier structure that is subject to this Section 2.8.2(C).

- Internet Protocol Routing Service (IPRS) as set forth in Section 16.5.3 following

In the event of a Transfer, the following applies.

© 2022 Frontier Communications Parent, Inc. All rights reserved

2. General Regulations (Cont'd)

2.8 Sale or Transfer of an Operating Telephone Company's Assets and/or Stock to an Unaffiliated Third Party (Cont'd)

2.8.2 Undertaking of the Telephone Company Following a Transfer (Cont'd)

(C) (Cont'd)

(1) The Telephone Company will calculate an adjustment to be used in each scheduled review/true-up following the Transfer for the balance of the customer's current term (**Transfer Adjustment**). The Transfer Adjustment (which will be calculated using the actual number of units transferred to the unaffiliated third party) offsets the reduced volume achieved by the customer solely as a result of the Transfer (**Transfer Adjustment Units**) by summing: (i) the actual volume units achieved by the customer during the applicable review/true-up period (**Actual Units**); and (ii) the Transfer Adjustment Units. The resulting volume of units (**Adjusted Units**) shall be used in all applicable review/true-up calculations for the balance of the customer's current term. Upon completion of the current term, the terms and conditions set forth in the applicable section(s) of this Guide shall apply using only the quantity of services the customer purchases from the Telephone Company with no further Transfer Adjustments being applied; and

(2) if, after applying the Transfer Adjustment, the customer still fails to maintain the same volume tier, the terms and conditions applicable to such result apply in accordance with the service offering, except that the calculation of any penalty associated with attaining a lesser volume tier shall be reduced pro-rata to reflect the Transfer.

For example, assume Frontier West Virginia Inc. transfers a portion of its assets to an unaffiliated third party. Further assume a customer who subscribes to IPRS under a 3 year term has 15,000 dial-up ports at the time of the Transfer (i.e., the rates applicable to 15,000 dial-up ports are the second volume tier rates for IPRS) and that 6,500 dial-up ports were transferred to an unaffiliated third party at the time of the Transfer. Further assume that at the next scheduled review/true-up following the Transfer, the customer has 9,500 dial-up ports in-service for which rates would normally apply at the first volume tier for IPRS. In this case, the Telephone Company will apply a Transfer Adjustment which adds the 6,500 dial-up ports lost in the Transfer (the Transfer Adjustment units) to the 9,500 dial-up ports the Telephone Company still provides to the customer (the Actual Units), the result of which is 16,000 dial-up ports (the Adjusted Units) and rates continue to be applied at the second volume tier for IPRS.

© 2022 Frontier Communications Parent, Inc. All rights reserved

2. General Regulations (Cont'd)

2.8 Sale or Transfer of an Operating Telephone Company's Assets and/or Stock to an Unaffiliated Third Party (Cont'd)

2.8.2 Undertaking of the Telephone Company Following a Transfer (Cont'd)

For Service Level Agreements (SLAs), a customer who participates in one of such SLAs prior to a Transfer shall continue with such SLA for the balance of the subscription term, regardless of whether or not the customer is able to satisfy the requirement(s) of the SLA using the reduced quantity of services the Telephone Company provides to the customer following a Transfer.

© 2022 Frontier Communications Parent, Inc. All rights reserved

2. General Regulations (Cont'd)

2.9 Initial Transfer of Assets from Predecessor Company

The original issuing carriers of this Guide were created by a transfer of assets from an unaffiliated third party. This Section 2.9 governs treatment of customers who, at the time of the transfer of assets from the predecessor company, subscribed to a service offering under this Guide that aggregates the customer's purchases from the Telephone Company to measure compliance with such service offering or participated in a SLC that aggregates the customer's measured transactions.

(A) When a customer subscribes to a service offering under this Guide that aggregates the customer’s purchases from the Telephone Company to measure compliance with such service offering or the customer participates in a SLA that aggregates the customer’s measured transactions, and the service offering or SLA includes terms and conditions pertaining to a transfer, the terms and conditions pertaining to a transfer will apply to that service offering or SLA as if the Telephone Company were the predecessor company.

(B) When customer subscribes to a service offering under this Guide that aggregates the customer’s purchases from the Telephone Company to measure compliance with such service offering or the customer participates in a SLA that aggregates the customer’s measured transactions, and the service offering or SLA does not include terms and conditions pertaining to a Transfer, Sections 2.8 preceding will apply as if the Telephone Company were the predecessor company.

For example, if a customer subscribed to a service offering with the predecessor company that aggregates the customer's measured transactions, and the transfer of assets resulted in the customer meeting the conditions described in 2.8.1(B) and (C) preceding with respect to the assets transferred to the Telephone Company, the provisions of 2.8.2 preceding will apply with respect to prorating any Minimum Requirements.

© 2022 Frontier Communications Parent, Inc. All rights reserved

3. RESERVED FOR FUTURE USE

© 2022 Frontier Communications Parent, Inc. All rights reserved

4. RESERVED FOR FUTURE USE

© 2022 Frontier Communications Parent, Inc. All rights reserved

5. Ordering Options for Special Access Service

5.1 General

This section sets forth the regulations and order related charges for Access Orders for Switched and Special Access Services. These charges are in addition to other applicable charges as set forth in other sections of this Guide.

An Access Order is an order to provide the customer with Switched Access Service or Special Access Service or to provide changes to existing services.

5.1.1 Ordering Conditions

A customer may order any number of services of the same type and between the same premises on a single Access Order. All details for services for a particular order must be identical except for those for multipoint service.

The customer shall provide all information necessary for the Telephone Company to provide and bill for the requested service. In addition to the order information required in 5.2 following, the customer must also provide:

- Customer name and premises address(es).
- Billing name and address (when different from customer name and address).
- Customer contact name(s) and telephone number(s) for the following provisioning activities: order negotiation, order confirmation, interactive design, installation and billing.

Orders for Lineside BSA and Feature Group A Switched Access Service shall be in lines.

Orders for Trunkside BSA - 950 Option and Feature Group B Switched Access Service shall be in trunks.

The order date, which is known as the Application Date, is the date on which the Telephone Company receives a firm commitment and sufficient information from the customer to allow processing of the Access Order. The customer is advised of the critical events in the provisioning process, the Application Date, the Scheduled Issue Date, the Design Layout Report Date, the Records Issue Date, Wired and Office Tested Date, Plant Test Date and Service Date, at the time the Telephone Company gives the customer a firm confirmation. This firm order confirmation is forwarded to the customer on the date which all information to process the ASR is available.

© 2022 Frontier Communications Parent, Inc. All rights reserved

5. Ordering Options for Special Access Service (Cont'd)

5.1 General (Cont'd)

5.1.2 Provision of Other Services

(A) In addition to Special Access Services, other services offered under this Guide shall be ordered with an Access Order or as set forth in (B) following. The rates and charges for these other services, as set forth in other sections of this Guide, will apply in addition to the ordering charges set forth in this section and the rates and charges for the Access Service with which they are associated.

(B) With the agreement of the Telephone Company, other services set forth in (A) preceding, may subsequently be added to the order at any time, up to and including the service date for the Access Service. When added subsequently, charges for a design change as set forth in 5.2.2(C) following will apply when an engineering review is required.

(C) Additional Engineering is not an ordering option, but will be applied to an Access Order when the Telephone Company determines that Additional Engineering is necessary to accommodate a customer request. Additional Engineering will only be required as set forth in 13.1 following. When it is required, the customer will be so notified and will be furnished with a written statement setting forth the justification for the Additional Engineering as well as an estimate of the charges. If the customer agrees to the Additional Engineering, a firm order will be established. If the customer does not want the service or facilities after being notified that Additional Engineering of Telephone Company facilities is required, the order will be withdrawn and no charges will apply. Once a firm order has been established, the total charge to the customer for the Additional Engineering may not exceed the estimated amount by more than 10%.

The regulations, rates and charges for Additional Engineering are as set forth in 13.1 following and are in addition to the regulations, rates and charges specified in this section.

5.1.3 Special Construction

When the Telephone Company determines that the installation of service meets the guidelines of the special construction tariffs, the customer is notified and conditions are negotiated as prescribed by the special construction tariffs. A joint planning meeting between customer and the Telephone Company may be held to minimize any special construction charges.

The regulations, rates and charges for interstate special construction are set forth in the tariffs as defined in Section 1. preceding and are in addition to the regulations, rates and charges specified in this section.

© 2022 Frontier Communications Parent, Inc. All rights reserved

5. Ordering Options for Special Access Service (Cont'd)

5.2 Access Order

An Access Order is used by the Telephone Company to provide a customer Access Service as follows:

- Special Access Services as set forth in Section 7 following,
- Packet Data Services as set forth in Section 16 following,
- Other Services as set forth in Section 5.1.2 preceding.

© 2022 Frontier Communications Parent, Inc. All rights reserved

5. Ordering Options for Special Access Service (Cont'd)

5.2 Access Order (Cont'd)

© 2022 Frontier Communications Parent, Inc. All rights reserved

5. Ordering Options for Special Access Service (Cont'd)

5.2 Access Order (Cont'd)

© 2022 Frontier Communications Parent, Inc. All rights reserved

5. Ordering Options for Special Access Service (Cont'd)

5.2 Access Order (Cont'd)

Special Access Connections with Other Network Services, such as WATS Access Connection (WAC) may be ordered separately by a customer other than the customer which orders the Switched Access Service.

© 2022 Frontier Communications Parent, Inc. All rights reserved

5. Ordering Options for Special Access Service (Cont'd)

5.2 Access Order (Cont'd)

For Dedicated Network Access Links (DNALs), the customer must specify the customer premises involved, the type of DNAL (e.g., Metallic or Voice Grade), the channel interface, technical specifications package and options desired, and the Percent Interstate Usage (PIU)(DNAL PIU must be the same as the Lineside BSA PIU which utilizes the DNAL), in accordance with section 2.3.10, preceding.

© 2022 Frontier Communications Parent, Inc. All rights reserved

5. Ordering Options for Special Access Service (Cont'd)

5.2 Access Order (Cont'd)

For Special Access Services, the customer must specify the customer premises or Hubs involved, the type of service (e.g. Video, Voice Grade, High Capacity, etc.), the channel interface, technical specification package and options desired, and the Percent Interstate Usage (PIU) as greater than or less than 10%, in accordance with Section 2.3.12, preceding. For multipoint services, the channel interface at each premises may, at the request of the customer, be different; but all such interfaces shall be compatible. For multiplexed High Capacity systems ordered to Facility Hubs except DS3 services with an optical interface, the customer must designate Hubs, specify Connecting Facility Assignment (CFA), and control channel assignment and routing of the subtending services. Telegraph and Voice Grade services that are ordered with compatible digital interfaces but without channel and assignment data will be provisioned, where facilities permit, on Telephone Company DS1 facilities inventory.

For all Packet Data Services, the customer must specify the customer designated premises; when applicable, the access concentrator or packet switch location involved, and the type of service to be provided through Special Access Service (e.g., voice grade or Digital Data Service); the channel interface; technical specification package(s) and options desired; the billing options and the desired optional features.

© 2022 Frontier Communications Parent, Inc. All rights reserved

5. Ordering Options for Special Access Service (Cont'd)

5.2 Access Order (Cont'd)

When establishing Special Access Service under a Shared Network Arrangement, the Host Subscriber and the Service User must coordinate with each other the design, testing and maintenance of the service; additionally, the service user must provide to the Telephone Company the Connecting Facility Assignment (CFA) and the High Capacity Billing Account Number (HBAN) of the Host Subscriber.

Upon receipt of a letter of authorization for a Shared Network Arrangement from the Host Subscriber, the Telephone Company will undertake to connect the Service User's circuits to the Host's service and to establish and maintain separate billing for the Service User's portion of the service. In the event that the Service User's is requesting a subtending circuit from a Host Subscriber's multiplexer which is, in term, part of a separate Shared Network Arrangement with a third-party Host (a cascading Shared Network Arrangement), the Service User must also obtain and provide to the Telephone Company the appropriate HBAN and CFA of the third-party Host, in order to identify the complete circuit for purposes of maintenance and testing continuity.

When the Shared Network Arrangement is requested for a service that will be provided over a Host Customer's DSR that is equipped with the Customer Service Management (CSM) optional feature as set forth in Section 23.1(K)(1) following, the Service User's Letter of Authorization must also include an acknowledgment that the Host Customer has the ability to perform CSM functions (e.g., reconfiguration) on the portion of the Service User's service that rides the DSR.

When the Shared Network Arrangement is requested for a service that will be provided over a Host Customer's DSR that is equipped with the Direct TL1 Monitoring (DTM) optional feature as set forth in Section 23.1(K)(2) following, the Service User's Letter of Authorization must also include an acknowledgment that the Host Customer has the ability to perform DTM functions (e.g., monitoring) on the portion of the Service User's service that rides the DSR.

For Dedicated SONET Ring (DSR) and Dedicated SONET Optical Transport Service (DSOTS), the Telephone Company will construct the customer's dedicated ring prior to issuance of an Access Service Request (ASR). The customer must provide the Telephone Company with complete and accurate information to design and construct the customer's dedicated ring. Construction will not begin until the customer and the Telephone Company agree on the design of the ring. The order date for the ring is the date on which the customer provides the Telephone Company with written or electronic authorization to begin construction. Upon subsequent notification by the Telephone Company that construction is complete, the customer must submit an ASR for the constructed service so that billing may commence. In the event that the customer cancels its request, or part of its request, for construction of the ring, or fails to subsequently issue the ASR so that billing of the constructed ring may commence, cancellation charges as set forth in 5.2.3(B)(4) following will apply.

© 2022 Frontier Communications Parent, Inc. All rights reserved

5. Ordering Options for Special Access Service (Cont'd)

5.2 Access Order (Cont'd)

© 2022 Frontier Communications Parent, Inc. All rights reserved

5. Ordering Options for Special Access Service (Cont'd)

5.2 Access Order (Cont'd)

Where the Special Access Service is exempt from the Special Access Surcharge as set forth in Section 7.4.2, following, the customer shall furnish with the order the certification as set forth in Section 7.4.2, following.

© 2022 Frontier Communications Parent, Inc. All rights reserved

5. Ordering Options for Special Access Service (Cont'd)

5.2 Access Order (Cont'd)

5.2.1 Access Order Service Date Intervals

Access Service is provided with one of the following Service Date Intervals:

- Standard Interval
- Negotiated Interval

To the extent the Access Service can be made available with reasonable effort, the Telephone Company will provide the Access Service in accordance with the customer's requested interval, subject to the following conditions:

(A) Standard Interval

The Telephone Company shall publish and make available to all customers a schedule of Standard Intervals applicable for Switched and Special Access Services. The schedule specifies the services and the quantities of services that can be provided in the Standard Intervals.

Access Services provided in a Standard Interval will be installed during Telephone Company business days. If a customer requests that installation be done outside of scheduled work hours, and the Telephone Company agrees to this request, the customer will be subject to applicable Additional Labor Charges as set forth in 13.2.6 following.

All services for which rates are applied on an individual case basis are provided with a Negotiated Interval.

© 2022 Frontier Communications Parent, Inc. All rights reserved

5. Ordering Options for Special Access Service (Cont'd)

5.2 Access Order (Cont'd)

5.2.1 Access Order Service Date Intervals (Cont'd)

(B) Negotiated Interval

The Telephone Company will negotiate a service date interval with the customer when:

(1) There is no Standard Interval for the service, or

(2) The customer requests a service date before or beyond the applicable Standard Interval service date, or

(3) The quantity of Access Services ordered exceeds the quantities specified in the Standard Intervals.

The Telephone Company will offer a service date based on the type and quantity of Access Services the customer has requested. The Negotiated Interval may not exceed by more than six months the Standard Interval Service date, or, when there is no Standard Interval, the Telephone Company offered service date.

All part-time Television and Program Audio services are provided with a Negotiated Interval. Each service is subject to a service inquiry. A service inquiry is a request to the Telephone Company to determine if facilities exist to provide the service ordered and to determine the service date on which the service can be provided to the customer.

© 2022 Frontier Communications Parent, Inc. All rights reserved

5. Ordering Options for Special Access Service (Cont'd)

5.2 Access Order (Cont'd)

5.2.2 Access Order Modifications

The customer may request a modification of its Access Order prior to the service date. The Telephone Company will make every effort to accommodate a requested modification when it is able to do so with the normal work force assigned to complete such an order within normal business hours. If the modification cannot be made with the normal work force during normal business hours, the Telephone Company will notify the customer. If the customer still desires the Access Order modification, the Telephone Company will schedule a new service date. All charges for Access Order modifications will apply on a per occurrence basis.

Any increase in the number of Special Access Service channels, Switched Access Service lines, trunks, Switched Transport facilities, or out of band signaling connections will be treated as a new Access Order (for the increased amount only).

If order modifications are necessary to satisfy the transmission performance for a Special Access Service ordered by a customer, these changes will be made without order modification charges being incurred by the customer.

(A) Service Date Change Charge

(1) For Speical Access Services, Access Order service dates for the installation of new services or rearrangements of existing services may be changed, but the new service date may not exceed the original service date by more than 30 calendar days except as specified following. When, for any reason, the customer indicates that service cannot be accepted for a period not to exceed 30 calendar days, and the Telephone Company accordingly delays the start of service, a Service Date Change Charge will apply.

If a customer or a customer's end user is unable to accept service within 30 calendar days of the original service date, the customer may elect one of the following options:

(a) the customer may take no action, and the order will be cancelled by the Telephone Company on the 31st day with the appropriate Cancellation Charge as set forth in 5.2.3 following applied; or

(b) the customer may choose to commence billing for the service on the 31st day.

© 2022 Frontier Communications Parent, Inc. All rights reserved

5. Ordering Options for Special Access Service (Cont'd)

5.2 Access Order (Cont'd)

5.2.2 Access Order Modifications (Cont'd)

(A) Service Date Change Charge (Cont'd)

(1) (Cont'd)

When a customer chooses the option to commence billing for the service on the 31st day, the customer must place an Access Order Modification to the existing Access Order prior to the 31st calendar day after the original service date to request a new service date. A Service Date Change Charge will not apply for such service date change; however, if subsequent additional service date changes are requested after calendar day 31, the Service Date Change Charge will apply, per request.

When a customer chooses the option to commence billing for the service on the 31st day, monthly recurring charges for the service will begin accruing at calendar day 31 after the original service date. The initial or subsequent bill for the service will include these accrued charges and any applicable nonrecurring charges in addition to billable charges specified in Section 2.4.1(B) preceding.

If the customer cancels the order after the 30th day, the customer will be billed the accrued monthly recurring charges specified preceding plus any applicable nonrecurring charges. These charges will be computed commencing at day 31 after the original service date up to and including the cancellation date. The customer will be responsible for applicable minimum period and termination liability charges.

© 2022 Frontier Communications Parent, Inc. All rights reserved

5. Ordering Options for Special Access Service (Cont'd)

5.2 Access Order (Cont'd)

5.2.2 Access Order Modifications (Cont'd)

(A) Service Date Change Charge (Cont'd)

(2) For services other than Special Access Services, Access Order service dates for the installation of new services or rearrangements of existing services may be changed, but the new service date may not exceed the original service date by more than 30 calendar days. When, for any reason, the customer indicates that service cannot be accepted for a period not to exceed 30 calendar days, and the Telephone Company accordingly delays the start of service, a Service Date Change Charge will apply.

If the customer requested service date is more than 30 calendar days after the original service date, or if the customer or the customer's end user is unable to accept Access Service within 30 calendar days of the original service date, the order will be cancelled by the Telephone Company on the 31st day with the appropriate Cancellation Charge as set forth in 5.2.3 following applied. If the customer still requires the service, the customer must place a new Access Order with the Telephone Company.

(3) A new service date may be established that is prior to the original standard or negotiated interval service date if the Telephone Company determines it can accommodate the customer's request without delaying service dates for orders of other customers. If the service date is changed to an earlier date, the customer will be notified by the Telephone Company that a Special Handling Charge as set forth in following will apply. Such charges will apply in addition to the Service Date Change Charge.

(4) Except as otherwise specified in (A)(1) preceding, a Service Date Change Charge will apply, on a per order per occurrence basis, for each service date changed. The applicable charge is:

Service Date Change Charge, per order	
Special Access	$150.00
Price Cap	150.00
Price Bands 4, 5 and 6	150.00
All Other Services	150.00

© 2022 Frontier Communications Parent, Inc. All rights reserved

5. Ordering Options for Special Access Service (Cont'd)

5.2 Access Order (Cont'd)

5.2.2 Access Order Modifications (Cont'd)

(B) Partial Cancellation Charge

Any decrease in the number of ordered Special Access Service channels, Switched Access Service lines, trunks, or out of band signaling connections (OBSC) ordered will be treated as a partial cancellation and the charges as set forth in 5.2.3(B) following will apply.

(C) Design Change Charges

The customer may request a design change to the service ordered. A design change is any change to an Access Order which requires engineering review. An engineering review is a review by Telephone Company personnel, of the service ordered and the requested changes to determine what change in the design, if any, are necessary to meet the changes requested by the customer. Design changes include such things as the addition or deletion of optional features or functions or a change in the type of Transport Termination (Switched Access only), type of channel interface, type of Interface Group or technical specification package. Design changes do not include a change of customer premises, end user premises, end office switch, Feature Group, Lineside BSA, Trunkside BSA, or Special Access Service, or Switched Transport facilities channel type. Changes of this nature will require the issuance of a new order and the cancellation of the original order with appropriate cancellation charges applied.

The Telephone Company will review the requested change, notify the customer whether the change is a design change, if it can be accommodated and if a new service date is required. If the customer authorizes the Telephone Company to proceed with the design change, a Design Change Charge will apply. The Design Change Charge will apply on a per order, per occurrence basis, for each order requiring a design change. The applicable charge is:

Design Change Charge, per order		
Special Access Service, per order	$150.00	
Price Cap	150.00	(C)
Price Bands 4, 5 and 6	150.00	
All Other Services	150.00	(C)

If a change of service date is required, the Service Date Change Charge as set forth in (A) preceding will also apply.

© 2022 Frontier Communications Parent, Inc. All rights reserved

5. Ordering Options for Special Access Service (Cont'd)

5.2 Access Order (Cont'd)

5.2.2 Access Order Modifications (Cont'd)

Special Handling Charge

A Special Handling Charge will apply when a customer requests a service date that is earlier than the Standard Interval service date for the Access Service ordered. A customer may also request an earlier service date on negotiated interval Access orders.

The request for an earlier service date may be received from the customer prior to the issuance of an Access order, or after the Access order has been issued but prior to the service date.

The Telephone Company maintains exclusive right to accept or deny the request to expedite. If, upon reviewing availability of equipment and scheduled work load, the Telephone Company agrees to provide service on an expedited basis and the customer accepts this proposal, a Special Handling Charge will apply.

If the Telephone Company is subsequently unable to meet an agreed upon expedited service date, then the Special Handling Charge will not apply.

In the event that the Telephone Company provides service on an expedited basis by customer request and the customer then delays service, an additional Service Date Change Charge beyond that specified in 5.2.2(A) preceding will be applied.

In the event that the customer cancels an expedite request, the Special Handling Charge will be added to the Cancellation Charge specified above.

A Special Handling Charge will not be applied to orders expedited for Telephone Company reasons.

Access Ordering Guidelines prohibit expedite orders when (C)
disconnecting services. (C)

© 2024 Frontier Communications Parent, Inc. All rights reserved

5. Ordering Options for Special Access Service (Cont'd)

5.2 Access Order (Cont'd)

5.2.2 Access Order Modifications (Cont'd)

Special Handling Charge (Cont'd)

If costs other than additional administrative expenses are to be incurred when Access order is expedited, the regulations, rates and charges for interstate special construction are as set forth in the tariffs as defined in Section 1, preceding.

The nonrecurring Special Handling Charge to be applied to all Switched and Special Access orders processed on an expedited basis is as follows:

Special Handling Charge, per order		
Special Access Service	$557.00	
Price Cap	557.00	(C)
Price Bands 4, 5 and 6	557.00	
All Other Services, per order	557.00	(C)

The Special Handling Charge will be billed in addition to the normal nonrecurring Access service charge and will be applied on a per order per occurrence basis.

© 2022 Frontier Communications Parent, Inc. All rights reserved

5. Ordering Options for Special Access Service (Cont'd)

5.2 Access Order (Cont'd)

5.2.3 Cancellation of an Access Order

(A) A customer may cancel an Access Order for the installation of service at any time prior to notification by the Telephone Company that service is available for the customer's use. The cancellation date is the date the Telephone Company receives written or verbal notice from the customer that the order is to be cancelled. The verbal notice must be followed by written confirmation within 10 days.

Subject to Section 5.2.2 preceding, a customer may negotiate an extension of a service date of an Access Order for installation of new services or rearrangements of existing services.

Costs incurred in conjunction with the provision of Switched or Special Access Service start on the Application Date as defined in (B)(2) following.

When the customer cancels an Access Order prior to being notified of the critical events in the Provisioning Process, as defined in (B)(2) following, no charges shall apply.

(B) Applicable charges for VG, DDS, DS1 & DS3 are the nonrecurring charge plus one month recurring charges for the service. Applicable charges for other services are based on the amount of provisioning completed by the Telephone Company at the time the order is cancelled. The charges are determined based on the following: (C)

(1) Certain Telephone Company critical dates are associated with an Access Order provisioning interval, whether Standard or Negotiated. These dates are used by the Telephone Company to monitor the progress of the provisioning process. At any point in the Access Order provisioning interval the Telephone Company is able to determine which critical date was last completed and can thus determine what percentage of the Telephone Company's nonrecurring charge has been incurred.

(2) The critical dates tracked by the Telephone Company are as follows:

- Application Date (APP): The date the customer provides a firm commitment and sufficient information as detailed in 5.1 preceding to the Telephone Company. This is also the order date.

- Scheduled Issue Date (SID): The date that the order is to be entered in the Telephone Company's order distribution system.

© 2022 Frontier Communications Parent, Inc. All rights reserved

5. Ordering Options for Special Access Service (Cont'd)

5.2 Access Order (Cont'd)

5.2.3 Cancellation of an Access Order (Cont'd)

(B) (Cont'd)

(2) (Cont'd)

- Design Layout Report Date (DLRD): The date the Design Layout Report (DLR) is to be forwarded to the customer. In the case of "Routing/Translation only" orders, this date occurs when all necessary network design and layout information has been passed to the Translation Writing Organization. Trunk

- Records Issue Date (RID): The date that all design and assignment information is to be sent to the central office and installation forces.

- Wired and Office Tested Date (WOT): The date by which all intraoffice wiring is to be completed, all plug-ins optioned, aligned, and frame continuity established, and the interoffice facilities, if applicable, tested. In addition, switching equipment, is to be installed and tested and all translations loaded and checked.

- Plant Test Date (PTD): The date on which overall testing of the service is to be started. In the case of "Routing/Translation only" orders, this date is when all individual office tests of the translations are completed.

- Service Date (DD): The date on which service is to be made available to the customer. This is sometimes referred to as the Due Date.

Routing/Switch Translation (R/T) installation orders are those that require translations software changes only. Routing/Translation software installation includes, but is not limited to, Toll Free/900 NNX code changes.

(3) The amount of the total provisioning completed by the Telephone Company at a particular critical date varies by the type of service shown as following:

© 2022 Frontier Communications Parent, Inc. All rights reserved

5. Ordering Options for Special Access Service (Cont'd)

5.2 Access Order (Cont'd)

5.2.3 Cancellation of an Access Order (Cont'd)

(B) (Cont'd)

(3) (Cont'd)

	APPSID	DLRD	RID	WOT	PTD
FGA[1]	0% 9%	19%	37%	100%	100%
FGB[2]	0% 8%	17%	32%	100%	100%
FGC[3]	0% 7%	18%	32%	100%	100%
FGD[4]	0% 7%	18%	32%	100%	100%
CCSAS	0% 7%	18%	32%	100%	100%
NSP	0% 20%	50%	75%	100%	100%
OTS	0% 7%	18%	32%	100%	100%
R/T*	0%20%	50%	75%	90%	100%
MT[5]	0%22%	39%	39%	68%	100%
S56	0% 7%	18%	32%	100%	100%
TG	0%12%	23%	23%	66%	100%
VG[6]	0% 8%	17%	17%	74%	100%
WAC	0% 7%	18%	32%	100%	100%
AP	0%10%	24%	24%	70%	100%
TV	0%10%	25%	50%	75%	100%
SCVS	0%10%	25%	50%	75%	100%
WA	0% 7%	26%	26%	69%	100%
WD	0% 7%	26%	26%	69%	100%
DA	0%10%	21%	21%	70%	100%
HC	0% 6%	21%	21%	74%	100%

1 and Lineside BSA
2 and Trunkside BSA - 950 Option
3 and Trunkside BSA - MTS/WATS Option
4 and Trunkside BSA-101XXXX Option
5 and Metallic DNAL
6 and Voice Grade DNAL

* Trunk Routing/Switch Translation (R/T) installation orders are those that require translations software changes only. Routing/Translation Software installation includes, but is not limited to, 900 NXX code changes.

© 2022 Frontier Communications Parent, Inc. All rights reserved

5. Ordering Options for Special Access Service (Cont'd)

5.2 Access Order (Cont'd)

5.2.3 Cancellation of an Access Order (Cont'd)

(B) (Cont'd)

(4) When a customer cancels an Access Order, or part of an Access Order, before the service date, the Telephone Company will apply cancellation charges to the order, unless the order is cancelled because the Telephone Company missed the service date.

Charges for the cancellation of a service are based on the amount of provisioning completed at the time of the request to cancel, except:

- For part-time Video (Basic TV, SCVS and DVTS) that is charged per service based on the work completed at the time of cancellation, cancellation charges for each service at each critical date are as shown following under the applicable service.

© 2022 Frontier Communications Parent, Inc. All rights reserved

5. Ordering Options for Special Access Service (Cont'd)

5.2 Access Order (Cont'd)

5.2.3 Cancellation of an Access Order (Cont'd)

(B) (Cont'd)

(4) (Cont'd)

- For Dedicated SONET Ring (DSR) and Dedicated SONET Optical Transport Service (DSOTS), cancellation charges also apply if the customer cancels an order, or part of an order, for the dedicated ring after providing the Telephone Company with written or electronic notification to begin construction of the ring. Cancellation charges apply as follows:

  - When a customer cancels the order or part of the order for its dedicated ring within the first thirty (30) days following written or electronic notification to the Telephone Company to begin construction of the ring, no cancellation charge will apply.

  - When a customer cancels the order or part of the order for its dedicated ring on the thirty-first (31st) day, but no later than the sixtieth (60th) day following written or electronic notification to the Telephone Company to begin construction of the ring, cancellation charges as set forth following, under the applicable service, will apply.

  - When a customer cancels the order or part of the order for its dedicated ring on the sixty-first (61st) day following written or electronic notification to the Telephone Company to begin construction of the ring, up to the date of notification that construction of the ring is complete, or the Access Service Request (ASR) is issued, whichever occurs first, cancellation charges as set forth following will apply. If the customer cancels the order, or part of the order, after construction is complete or the ASR is issued, minimum period charges and termination liability also apply.

© 2022 Frontier Communications Parent, Inc. All rights reserved

5. Ordering Options for Special Access Service (Cont'd)

5.2 Access Order (Cont'd)

5.2.3 Cancellation of an Access Order (Cont'd)

(B) (Cont'd)

(4) (Cont'd)

Cancellation charges for each service at each critical date are as follows:

	APP	SID	DLRD	RID	WOT	PTD	
FGA[1]	$0	$75.00	$187.50	$375.00	$562.50	$750.00	
FGB[2]	$0	$75.00	$187.50	$375.00	$562.50	$750.00	
FGC[3]	$0	$75.00	$187.50	$375.00	$562.50	$750.00	
FGD[4]	$0	$75.00	$187.50	$375.00	$562.50	$750.00	
CCSAS	$0	$75.00	$187.50	$375.00	$562.50	$750.00	
NSP[7]	$0	$600.00	$1500.00	$2250.00	$3000.00	$3000.00	
OTS	$0	$75.00	$187.50	$375.00	$562.50	$750.00	
R/T	$0	$70.00	$175.00	$262.50	$315.00	$350.00	
S56	$0	$75.00	$187.50	$375.00	$562.50	$750.00	
DA	$0	$75.00	$187.50	$375.00	$562.50	$750.00	
MT[3, 5]	$0	$20.00	$50.00	$100.00	$150.00	$200.00	
MT[7]	$0	$20.00	$50.00	$100.00	$150.00	$200.00	
TG[3]	$0	$75.00	$187.50	$375.00	$562.50	$750.00	
TG[7]	$0	$75.00	$187.50	$375.00	$562.50	$750.00	
							(D)
							(D)
WAC[3]	$0	$70.00	$175.00	$350.00	$525.00	$700.00	
WAC[7]	$0	$70.00	$175.00	$350.00	$525.00	$700.00	
AP[3]	$0	$90.00	$225.00	$450.00	$675.00	$900.00	
AP[7]	$0	$90.00	$225.00	$450.00	$675.00	$900.00	
TV[3]	$0	$90.00	$225.00	$450.00	$675.00	$900.00	
TV[7]	$0	$90.00	$225.00	$450.00	$675.00	$900.00	
SCVS/ DVTS[3]	$0	$140.00	$350.00	$700.00	$1050.00	$1400.00	
SCVS/ DVTS[7]	$0	$140.00	$350.00	$700.00	$1050.00	$1400.00	
WA	$0	$75.00	$187.50	$375.00	$562.50	$750.00	
WD	$0	$75.00	$187.50	$375.00	$562.50	$750.00	

1 and Lineside BSA
2 and Trunkside BSA - 950 Option
3 Price Cap
4 and Trunkside BSA-101XXXX Option
5 and Metallic DNAL
6 and Voice Grade DNAL
7 Price Bands 4, 5 and 6

© 2022 Frontier Communications Parent, Inc. All rights reserved

5. Ordering Options for Special Access Service (Cont'd)

5.2 Access Order (Cont'd)

5.2.3 Cancellation of an Access Order (Cont'd)

(B) (Cont'd)

(4) (Cont'd)

Cancellation Charge per ASR

VG, DDS, DS1,DS3	Nonrecurring charge plus one month recurring charges for the service.	(M)

(C)

Dedicated SONET Service
DSBT
Cancellation charges for each service at each critical date

	APP	SID	DLRD	RID	WOT	PTD
OC3, OC3c, OC12, OC12c, OC48, OC48c	$0	$364.00	$1,820.00	$3,640.00	$3,640.00	$3,640.00
OC192, OC192c	$0	$364.00	$14,020.00	$28,040.00	$28,040.00	$28,040.00

(C)

DSR: Cancellation Charges, which apply prior to issuance of the ASR;
- Per node, port node, or per high speed interface.

	Within the First 30 days of ordering	31st to 60th after ordering	61st day after ordering - end of Construction
OC3,	NONE	$565.00	$1,130.00
OC12/3,	NONE	$773.00	$1,546.00
OC12,	NONE	$962.00	$1,924.00
OC48,	NONE	$2,159.00	$4,318.00
OC192,	NONE	$7,010.00	$14,020.00

(D)
(D)

© 2022 Frontier Communications Parent, Inc. All rights reserved

5. Ordering Options for Special Access Service (Cont'd)

5.2 Access Order (Cont'd)

5.2.3 Cancellation of an Access Order (Cont'd)

(B) (Cont'd)

(4) (Cont'd)

Cancellation charges for each service at each critical date (Cont'd):

DSR: Cancellation Charges, which apply following notification that construction is complete or after issuance of the ASR;
- Per node, port node, or per high speed interface.

	All Critical Dates	
OC3	$1,130.00	
OC12/3		$1,546.00
OC12	$1,924.00	
OC48	$4,318.00	
OC192		$14,020.00

	APP	SID	DLRD	RID	WOT	PTD
IEF (per STS1) **& DSSSP**[1]	$0	$200.00	$500.00	$2,000.00	$2,000.00	$2,000.00
IEF (per STS1) **& DSSSP**[2]	$0	$200.00	$500.00	$2,000.00	$2,000.00	$2,000.00

DSOTS: Category I Cancellation Charges, Which Apply Prior to Issuance of the Access Service Request

	Within the First 30 Days of Ordering	31st to 60th Day After Ordering	61st Day After Ordering to Completion of Construction
- Per Primary Node	None	$13,000.00	$26,000.00
- Per Expansion Node	None	$26,000.00	$52,000.00
- Per Mid-Span Amp.	None	$5,600.00	$10,600.00
- Per Node Amp.	None	$5,600.00	$10,600.00
- Per High Speed Interface	None	$5,600.00	$10,600.00

1 Price Cap
2 Price Bands 4, 5 and 6

© 2022 Frontier Communications Parent, Inc. All rights reserved

5. Ordering Options for Special Access Service (Cont'd)

5.2 Access Order (Cont'd)

5.2.3 Cancellation of an Access Order (Cont'd)

(B) (Cont'd)

(4) (Cont'd)

Cancellation charges for each service at each critical date (Cont'd):

DSOTS: Category I Cancellation Charges Which Apply Following Notification that Construction is Complete or After Issuance of the Access Service Request

	All Critical Dates
- Per Primary Node	$26,000.00
- Per Expansion Node	$52,000.00
- Per Mid-Span Amp.	$10,600.00
- Per Node Amp.	$10,600.00
- Per High Speed Interface	$10,600.00

DSOTS: Category II Cancellation Charges, Which Apply Prior to Issuance of the Access Service Request

	Within the First 30 Days of Ordering	31st to 60th Day After Ordering	61st Day After Ordering to Completion of Construction
- Per Primary Node	None	$13,000.00	$26,000.00
- Per Expansion Node	None	$26,000.00	$52,000.00
- Per Mid-Span Amp.	None	$5,600.00	$10,600.00
- Per High Speed Interface	None	$5,600.00	$10,600.00

DSOTS: Category II Cancellation Charges Which Apply Following Notification that Construction is Complete or After Issuance of the Access Service Request

	All Critical Dates
- Per Primary Node	$26,000.00
- Per Expansion Node	$52,000.00
- Per Mid-Span Amp.	$10,600.00
- Per High Speed Interface	$10,600.00

© 2022 Frontier Communications Parent, Inc. All rights reserved

5. Ordering Options for Special Access Service (Cont'd)

5.2 Access Order (Cont'd)

5.2.3 Cancellation of an Access Order (Cont'd)

(B) (Cont'd)

(4) (Cont'd)

Cancellation charges for each service at each critical date (Cont'd):

	APP	SID	DLRD	RID	WOT	PTD
DSSAN						
- (per Transport Channel)						
- DS1	$0	$75.00	$187.50	$750.00	$750.00	$750.00
- DS3	$0	$200.00	$500.00	$2,000.00	$2,000.00	$2,000.00
- OC3 & OC3c	$0	$364.00	$1820.00	$3,640.00	$3,640.00	$3,640.00
(per Entrance Ring POP)	$0	$150.00	$375.00	$1,500.00	$1,500.00	$1,500.00
DSSDP[1]	$0	$20.00	$50.00	$200.00	$200.00	$200.00
DSSDP[2]	$0	$20.00	$50.00	$200.00	$200.00	$200.00
Channel Extension Service	$0	$0	$0	$0	$7,600.00	$7,600.00
LAN Extension Service	$0	$140.00	$280.00	$1,400.00	$1,400.00	$1,400.00

1 Price Cap
2 Price Bands 4, 5 and 6

© 2022 Frontier Communications Parent, Inc. All rights reserved

5. Ordering Options for Special Access Service (Cont'd)

5.2 Access Order (Cont'd)

5.2.3 Cancellation of an Access Order (Cont'd)

(B) (Cont'd)

(4) (Cont'd)

Cancellation charges for each service at each critical date (Cont'd):

Ethernet Private Line (per On-Net Channel Extension)

10 Mbps Ethernet or 10 Mbps Ethernet Mapped to STS1

APP	SID	DLRD	RID	WOT	PTD
$0	$200.00	$500.00	$2,000.00	$2,000.00	$2,000.00

100 Mbps Ethernet or 100 Mbps Ethernet Mapped to STS1 or OC3c

APP	SID	DLRD	RID	WOT	PTD
$0	$364.00	$1,820.00	$3,640.00	$3,640.00	$3,640.00

1 Gbps Ethernet or 1 Gbps Ethernet Mapped to OC3, OC12, OC12c or OC48

APP	SID	DLRD	RID	WOT	PTD
$0	$364.00	$1,820.00	$3,640.00	$3,640.00	$3,640.00

1 Gbps Fibre Channel or 1 Gbps Fibre Channel Mapped to OC48

APP	SID	DLRD	RID	WOT	PTD
$0	$364.00	$1,820.00	$3,640.00	$3,640.00	$3,640.00

1 Gbps FiCON or 1 Gbps FiCON Mapped to OC48

APP	SID	DLRD	RID	WOT	PTD
$0	$364.00	$1,820.00	$3,640.00	$3,640.00	$3,640.00

Ethernet Private Line (per Access Aggregation Port)

OC3 Aggregation Port

APP	SID	DLRD	RID	WOT	PTD
$0	$364.00	$1,820.00	$3,640.00	$3,640.00	$3,640.00

OC12 Aggregation Port

APP	SID	DLRD	RID	WOT	PTD
$0	$364.00	$1,820.00	$3,640.00	$3,640.00	$3,640.00

OC48 Aggregation Port

APP	SID	DLRD	RID	WOT	PTD
$0	$364.00	$1,820.00	$3,640.00	$3,640.00	$3,640.00

© 2022 Frontier Communications Parent, Inc. All rights reserved

5. Ordering Options for Special Access Service (Cont'd)

5.2 Access Order (Cont'd)

5.2.3 Cancellation of an Access Order (Cont'd)

(C) When a customer cancels an order for the discontinuance of service, no charges apply for the cancellation.

5.2.4 Selection of Facilities For Access Orders

(A) When there are analog or digital high capacity facilities to a Hub on order or in service for the customer's use, the customer may request a specific channel or transmission path be used to provide the Switched or Special Access Service requested in an Access Order. The Telephone Company will make a reasonable effort to accommodate the customer request.

(B) For all other Access Orders, the option to request a specific transmission path or channel is not provided except as provided for under Special Facilities Routing as set forth in 11. following.

5.2.5 Minimum Period

(A) Except as set forth in (B) following, 7.2.5(E), (F) and (G), 7.2.11(F), 7.2.13(C), 7.2.14(C), 7.2.15(E), 7.2.16(E), 7.4.13, 7.4.16, 7.4.17, 8.2(C), 8.3(C), 9.4(A), 16.5, 16.7, 25.1.10 and 25.3.8 following, the minimum period for which Access Service is provided and for which charges are applicable, is one month.

(B) The minimum period for part-time Video (Basic, SCVS and DVTS) and Program Audio Special Access Services is one day even though the service will be provided only for the duration of the event specified on the order (e.g., one-half hour, two hours, five hours, etc.).

(C) Service Rearrangements as set forth in 6.8.1(C)(2) and 7.4.1(C)(3) following for Switched and Special Access Services respectively, may be made without a change in minimum period requirements.

© 2022 Frontier Communications Parent, Inc. All rights reserved

5. Ordering Options for Special Access Service (Cont'd)

5.2 Access Order (Cont'd)

5.2.5 Minimum Period (Cont'd)

Changes other than those identified in 6.8.1(C)(2) or 7.4.1(C)(3) following will be treated as a discontinuance of the existing service and an installation of a new service. All associated nonrecurring charges will apply for the new service. A new minimum period will be established for the new service. The customer will also remain responsible for all outstanding minimum period obligations associated with the disconnected service.

The changes listed below are those which will be treated as a discontinuance and installation of service except as specified in 2.1.2(A) preceding and for which a new minimum period is to be established.

(1) A change of customer of record (i.e., Access Service is provided to and billed to a different customer)
(2) A move to a different building as set forth in 6.8.7(B) or 7.4.5(B) following
(3) A change in type of service (i.e., Switched Access to Special Access, one type of Special Access to another, or one type of Switched Access Feature Group to another except as set forth in 6.8.6 following)
(4) A change in the type of Special Access Service Channel Termination and DSEF and DSBT Terminations
(5) A change in Switched Access Service or Directory Assistance Service Interface Group
(6) Change in Switched Access Service traffic type
(7) Change from two-point to multipoint Special Access Service or from multipoint to two-point Special access service.

5.2.6 Minimum Period Charges

When Access Service is disconnected prior to the expiration of the minimum period, charges are applicable for the balance of the minimum period. A disconnect constitutes facilities being returned to available inventory.

Except as specifically stated in service descriptions, the Minimum Period Charge for basic month-to-month services will be determined as follows:

(A) For Switched Access Service, the charge is equal to the applicable minimum monthly charge for the capacity as set forth in 6.8.4 following.

© 2022 Frontier Communications Parent, Inc. All rights reserved

5. Ordering Options for Special Access Service (Cont'd)

5.2 Access Order (Cont'd)

5.2.6 Minimum Period Charges (Cont'd)

(B) For Special Access facilities, the charge for a month or fraction thereof is the applicable monthly rates for the service as set forth in 7.5 and 8.2 following, except for Special Access DS3 High Capacity Service channel terminations, which are calculated using the rate band determined by the last count taken.

(C) For Packet Data Services, the charge for a month or fraction thereof is the applicable monthly rates for the service as set forth in 16 following.

The Minimum Period Charge for part-time video (Basic, SCVS and DVTS) and Program Audio Services is the applicable daily rate for the service as set forth in 7.5 following.

The Minimum Period Charge is in addition to all applicable nonrecurring charges for the service.

5.2.7 Discontinuance of Access Service

Except as set forth in Sections 7.4.13 , 7.4.15(A), and 7.4.16(C) following, a customer may request disconnect of an access service, in writing, at any time after the service has been established. Notice of discontinuance must be given by (C) the customer at least thirty (30) business days prior to actual discontinuance. Monthly charges will apply for a period of thirty (30) business days from the date the Company receives discontinuance notification or until the requested discontinuance date if longer than thirty (30) business days. Minimum Period Charges are (C) applicable if the Minimum Period, as specified in 5.2.6 preceding, has not been satisfied at the time of disconnect.

5.2.8 Shared Use Facilities

Shared Use (i.e., Switched and Special Access Services provided over the same analog or digital high capacity facilities) is allowed. Shared use facilities to a Hub will be ordered and provided as Special Access Service. While shared use is allowed, individual services utilizing these facilities must be ordered either as Switched Access Service or Special Access Service. When placing the order for the individual service(s) the customer must specify a channel assignment for each service ordered.

© 2024 Frontier Communications Parent, Inc. All rights reserved

6. RESERVED FOR FUTURE USE

© 2022 Frontier Communications Parent, Inc. All rights reserved

7. Special Access Service

7.1 General

Special Access Service provides a transmission path to connect customer designated premises*, either directly or through a Telephone Company Hub where bridging, multiplexing or Reconfigure Service functions are performed. In addition, Special Access provides a transmission path to connect a customer designated premises to a WATS Serving Office (WSO), to a wire center where connection to an advanced data service# occurs, or to a fiber meet location of a Dedicated SONET Ring Service as set forth in Section 23.1 following or an Dedicated SONET Optical Transport Service as set forth in 7.2.14 following. Special Access Service includes all exchange access not utilizing Telephone Company end office switches, with the exception of Reconfigure Service and WATS Access Line Service.

The connections provided by Special Access Service can be either analog or digital. Analog connections are differentiated by spectrum and bandwidth. Digital connections are differentiated by bit rate.

7.1.1 Channel Types

There are ten types of channels used to provide Special Access Services. Each type has its own characteristics. All are subdivided by one or more of the following:

- Transmission specifications,
- Bandwidth,
- Speed (i.e., bit rate),
- Spectrum

Customers can order a basic channel and select, from a list of available transmission parameters and channel interfaces, those that they desire to meet specific communications requirements.

* When Telephone Company central office switches provide local exchange service which utilize a common line which must be interconnected for interstate communications (e.g., Centrex), the Telephone Company central office, where the local exchange service ends and the access connection begins, shall be treated as a customer premises for purposes of this Guide. The physical space from which other Telephone Company services are provided, whether or not on Telephone Company property, shall be treated as a customer premises. The central office where packet data services and data base services reside shall also be included in this definition.

Advanced data services include Telephone Company provided frame relay services, switched multi-megabit services, Internet Protocol services and ATM-cell relay services. Connections to advanced data services are provided by the Telephone Company where such connections are technically and operationally feasible, as determined by the Telephone Company.

© 2022 Frontier Communications Parent, Inc. All rights reserved

7. Special Access Service (Cont'd)

7.1 General (Cont'd)

7.1.1 Channel Types (Cont'd)

For purposes of ordering channels, each has been identified as a type of Special Access Service. However, such identification is not intended to limit a customer's use of the channel nor to imply that the channel is limited to a particular use. For example, if a customer's equipment is capable of transmitting voice over a channel that is identified as a Metallic Service in this Guide, there is no restriction against doing so.

Following is a brief description of each type of channel:

Metallic - a channel for the transmission of low speed varying signals at rates up to 30 baud.

Telegraph Grade - a channel for the transmission of binary signals at rates of 0 to 75 baud or 0 to 150 baud.

Voice Grade - a channel for the transmission of analog signals within an approximate bandwidth of 300-3000 Hz.

WATS Access Line - a channel between a customer designated premises and a WATS Serving Office (WSO) for transmission of interstate or international traffic.

Program Audio - a channel for the transmission of audio signals. The nominal frequency bandwidths are from 50 to 15000 Hz, from 200 to 3500 Hz, from 100 to 5000 Hz or from 50 to 8000 Hz.

Video - a channel for the transmission of a standard 525 line/60 field monochrome or National Television Systems Committee color video signal and one or two associated 5 or 15 kHz audio signals. The bandwidth for a video channel is either 30 Hz to 4.5 MHz or 30 Hz to 6.6 MHz.

Serial Component Video – a channel for one-way transmission, at a rate of 270 Mbps, of broadcast quality 4:2:2 component video signals in serial digital format.

Wideband Analog - a channel for the transmission of wideband signals. The bandwidths are from 60 to 108 kHz (Group), from 312 to 552 kHz (Supergroup), from 564 to 3084 kHz (Mastergroup), from 300 Hz to 18 kHz, from 29 to 44 kHz or from 28 to 44 kHz.

Wideband Data - an analog channel for the transmission of synchronous serial data at rates of 19.2, 50.0 or 230.4 kbps or asynchronous serial data at rates of up to 19.2, 50.0 or 230.4 kbps.

© 2022 Frontier Communications Parent, Inc. All rights reserved

7. Special Access Service (Cont'd)

7.1 General (Cont'd)

7.1.1 Channel Types (Cont'd)

Digital Data - a channel for the digital transmission of data at rates of 2.4, 4.8, 9.6, 19.2, 56 or 64 kbps.

High Capacity - a channel for the transmission of isochronous serial digital data at rates of 1.544, 3.152 or 44.736 Mbps.

High-Definition (Hi-Def) Digital Video Transport Service – a channel for one-way broadband transmission of high quality video signals in digital format, at a rate of 19.39 Mbps or 1.485 Gbps.

45 Mbps Digital Video Transport Service – a channel for one-way broadband transmission, at a rate of 45 Mbps, of high quality video signals in digital format.

Supertrunking Transport Video Service (SVS) – a channel with a bandwidth of up to either 750 MHz or 870 MHz for the transmission of multiple Amplitude Modulation (AM) standard 525 line/60 field monochrome or National Television Systems committee (NTSC) color video signals and monaural or Broadcast Television Systems Committee (BTSC) stereo audio signals over fiber optic facilities.

Detailed descriptions of each of the channel types are provided in 7.2 following:

The customer also has the option of ordering Voice Grade and analog and digital high capacity facilities (i.e., Group, Supergroup, Mastergroup, 1.544 Mbps, 3.152 Mbps, and 44.736 Mbps) to a Telephone Company Hub for multiplexing to individual channels of a lower capacity or bandwidth. Descriptions of the types of multiplexing available at the Hubs, as well as the number of individual channels which may be derived from each type of facility are set forth in 7.2 following. Additionally, the customer may specify optional features for the individual channels derived from the facility to further tailor the channel to meet specific communications requirements. Descriptions of the optional features and functions available are also set forth in 7.2 following.

For example, a customer may order a DS3/44.736 Mbps facility from a customer designated premises to a Telephone Company Hub for multiplexing to twenty-eight 1.544 Mbps channels. The 1.544 Mbps channels may be further multiplexed at the same or a different Hub to Voice Grade or Wideband Analog (i.e., Group level) channels or may be extended to other customer designated premises. Optional features may be added to either the 1.544 Mbps or the Voice Grade Channels.

© 2022 Frontier Communications Parent, Inc. All rights reserved

7. Special Access Service (Cont'd)

7.1 General (Cont'd)

7.1.2 Rate Categories

There are five basic rate categories which apply to Special Access Service:

- Channel Terminations, including WATS Access Connections (WACs) (described in 7.1.2(A) following)
- Channel Mileage (described in 7.1.2(B) following)
- Optional Features and Functions (described in 7.1.2(C) following)
- Surcharge (described in 7.4.2 following)
- Message Station Equipment Recovery Charge (described in 7.4.3 following)

Additionally, rates and charges for Integrated Optical Service Riders may also apply to Special Access connected to Integrated Optical Service Riders as set forth in Section 24.1 following.

(A) Channel Termination

The Channel Termination rate category provides for the communications path between a customer designated premises and the serving wire center of that premises. Included as part of the Channel Termination is a standard channel interface arrangement which defines the technical characteristics associated with the type of facilities to which the access service is to be connected at the Point of Termination (POT) and the type of signaling capability, if any. The signaling capability itself is provided as an optional feature as set forth in (C) following. One Channel Termination charge applies per customer designated premises at which the channel is terminated. This charge will apply even if the customer designated premises and the serving wire center are collocated in a Telephone Company building. For WATS Access Line Service, the WATS Serving Office (WSO) is never considered a customer premises. A Channel Termination charge does not apply at a DSR fiber meet location where high speed interconnection of the Company's facilities to the facilities of the customer or of a third party occurs.

The Channel Termination rate category may also be employed to provide for connections to other service offerings.

Rates for End User Channel Terminations are subject to the rules governing Competitive Counties as discussed in Section 14.4.

© 2022 Frontier Communications Parent, Inc. All rights reserved

7. Special Access Service (Cont'd)

7.1 General (Cont'd)

7.1.2 Rate Categories (Cont'd)

(B) Channel Mileage

The Channel Mileage rate category provides for the transmission facilities between the serving wire centers associated with two customer designated premises, between a serving wire center associated with a customer designated premises and a Telephone Company Hub, between a serving wire center and a wire center where connection to an advanced data service occurs or between two Telephone Company Hubs. The Channel Mileage rate category also provides for the dedicated ring facilities between devices (nodes, high speed interfaces, or amplifiers) on a DSR as set forth in Section 23.1 following or DSOTS Service as set forth in 7.2.14(C)(4). A serving wire center associated with a customer's designated premises may be either the wire center from which the customer would normally obtain dial tone or an alternate serving wire center as described in 7.2.9 (7) following. Channel Mileage rates are comprised of a fixed rate element and a per mile rate element.

(C) Optional Features and Functions

The Optional Features and Functions rate category provides for optional features and functions which may be added to a Special Access Service to improve its quality or utility to meet specific communications requirements. These are not necessarily identifiable with specific equipment, but rather represent the end result in terms of performance characteristics which may be obtained. These characteristics may be obtained by using various combinations of equipment. Although the equipment necessary to perform a specified function may be installed at various locations along the path of the service, they will be charged as a single rate element.

The following is a list of Bell Atlantic's Open Network Architecture (ONA) Special Access Basic Service Elements (BSEs) which provides a cross-reference to the generic name contained in Bell Operating Companies, Service Descriptions, ONA Services User Guide, July 31, 1991, from the product name utilized in this Guide.

GENERIC NAME	BELL ATLANTIC PRODUCT NAME
Access to Clear Channel Transmission	Clear Channel Capability
Automatic Protection Switching	Automatic Loop Transfer
Bridging	Bridging
Conditioning	Conditioning
Inband Signaling	Inband Signaling
Network Reconfiguration	Network Reconfiguration
Route Diversity	Route Diversity
Secondary Channel Capability	Secondary Channel

Material on this page used to appear on Page 7-4.

© 2022 Frontier Communications Parent, Inc. All rights reserved

7. Special Access Service (Cont'd)

7.1 General (Cont'd)

7.1.2 Rate Categories (Cont'd)

(C) Optional Features and Functions (Cont'd)

Examples of Optional Features and Functions that are available include, but are not limited to, the following:

- Signaling Capability
- Hubbing Functions
- Conditioning
- Transfer Arrangements

A Hub is a Telephone Company designated serving wire center which may perform bridging, multiplexing, and/or Reconfigure Service reconfiguration functions. The bridging functions performed are to connect three or more customer designated premises in a multipoint arrangement. The multiplexing functions are to channelize analog or digital facilities to individual services requiring a lower capacity or bandwidth. Reconfigure Service allows the customer the capability to reconfigure their special access services.

Descriptions for each of the available Optional Features and Functions are set forth in 7.2 following. Reconfigure Service is described in 7.2.12, following.

7.1.3 Service Configurations

There are two types of service configurations over which Special Access Services are provided: two-point service and multi-point service.

(A) Two-Point Service

A two-point service connects two customer designated premises, either on a directly connected basis or through a Hub where multiplexing or Reconfigure Service functions are performed. Two point service also connects a customer designated premises and a WATS Serving Office (WSO).

Applicable rate elements are:

- Channel Termination(s)
- Channel Mileage (as applicable)
- Optional Features and Functions (when applicable)

In addition, a Special Access Surcharge as set forth in 7.4.2 following, a Message Station Equipment Recovery Charge as set forth in 7.4.3 following may be applicable.

© 2022 Frontier Communications Parent, Inc. All rights reserved

7. Special Access Service (Cont'd)

7.1 General (Cont'd)

7.1.3 Service Configurations (Cont'd)

(A) Two-Point Service

The following diagram depicts a two-point Voice Grade service connecting two customer designated premises located 15 miles apart. The service is provided with C-Type Conditioning.

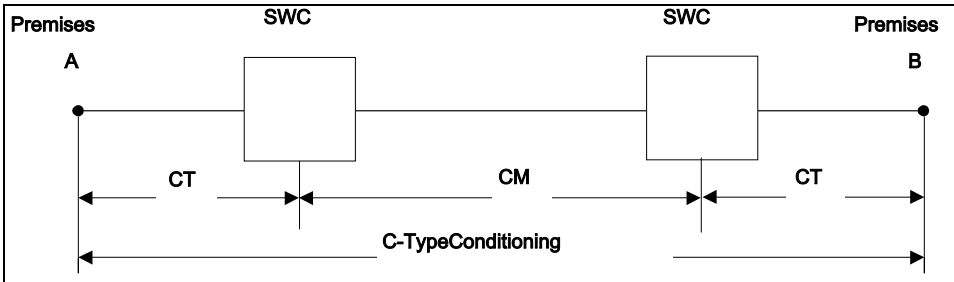

CT - ChannelTermination

CM - ChannelMileage

SWC - ServingWireCenter

Applicablerateelementsare:

- ChannelTerminations(2Applicable)
- ChannelMilege(fixedrate+ratepermile)
- C-TypeConditioningOptionalFeature(2applicable)

© 2022 Frontier Communications Parent, Inc. All rights reserved

7. Special Access Service (Cont'd)

7.1 General (Cont'd)

7.1.3 Service Configurations (Cont'd)

(B) Multipoint Service

Multipoint service connects three or more customer designated premises through a Telephone Company Hub. There is no limitation on the number of mid-links available with multipoint service. However, when more than three mid-links are provided in tandem, the quality of the service may be degraded. A mid-link is a channel between Hubs (i.e., bridging locations). Only certain types of Special Access Service are provided as multipoint service. These are so designated in the Service Descriptions set forth in 7.2 following.

Multipoint service utilizing a customized technical specifications package as set forth in 7.2 following will be provided when technically possible. If the Telephone Company determines that the requested characteristics for a multi-point service are not compatible, the customer will be advised and given the opportunity to change the order.

When ordering, the customer will specify the desired bridging Hub(s) selected from the Exchange Carrier Association Tariff F.C.C. No. 4. This Guide identifies type(s) of bridging functions which are available and the serving wire centers at which they are available.

Applicable Rate Elements are:

- Channel Terminations (one per customer designated premises)
- Channel Mileage (as applicable between each designated customer premises and the Hub and between Hubs)
- Bridging

- Additional Optional Features (when applicable).

In addition, the Special Access Surcharge as set forth in 7.4.2 following and a Message Station Equipment Recovery Charge as set forth in 7.4.3 following may be applicable.

© 2022 Frontier Communications Parent, Inc. All rights reserved

7. Special Access Service (Cont'd)

7.1 General (Cont'd)

7.1.3 Service Configurations (Cont'd)

(B) Multipoint Service (Cont'd)

Example: Voice Grade multipoint service connecting four customer premises via two customer specified bridging hubs.

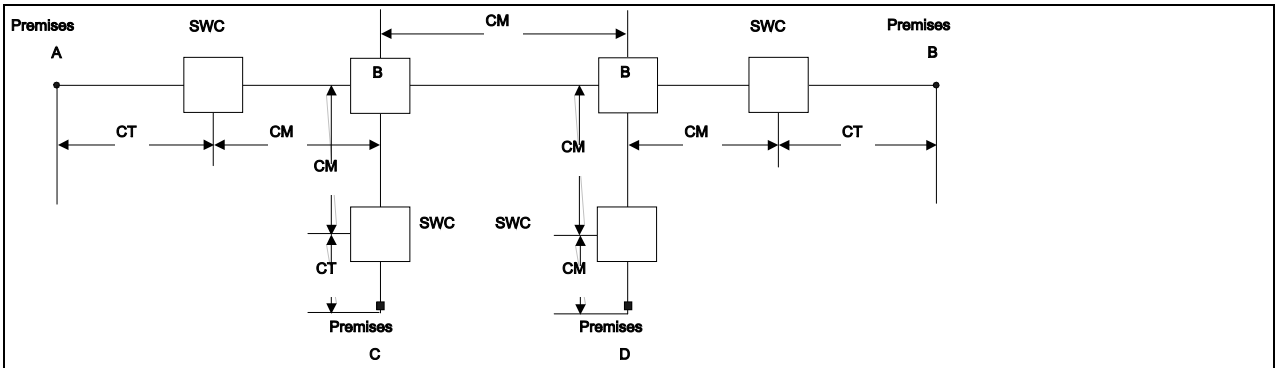

CT - ChannelTermination
CM - ChannelMileage
B - Bridging
SWC - ServiceWireCenter

Applicablerateelementsare:
- ChannelTermination(4applicable)
- ChannelMileage(5sections)
- Bridging(6applicable,i.e.eachbridgeport)

© 2022 Frontier Communications Parent, Inc. All rights reserved

7. Special Access Service (Cont'd)

7.1 General (Cont'd)

7.1.4 Alternate Use

Alternate Use occurs when a service is arranged by the Telephone Company so that the customer can select different types of transmission at different times. A customer may use a service in any privately beneficial manner. However, where technical or engineering changes are required to effectuate an alternate use, the Telephone Company will make such special arrangements available on an individual case basis.

The arrangement required to transfer the service from one operation to the other (i.e., the transfer relay and control leads) will be rated and provided on an individual case basis and filed in Section 12, Specialized Service or Arrangements. The customer will pay the stated tariff rates for the Access Service rate elements for the service ordered (i.e., Channel Terminations, Channel Mileage [as applicable] and Optional Features [if any].

7.1.5 Special Facilities Routing

A customer may request that the facilities used to provide Special Access Service be specially routed. The regulations, rates and charges for Special Facilities Routing (i.e., Avoidance, Diversity and Cable-Only) are set forth in this section and in 11. following:

7.1.6 Design Layout Report

At the request of the customer, the Telephone Company will provide to the customer the make-up of the facilities and services provided under this Guide as Special Access Service to aid the customer in designing its overall service. This information will be provided in the form of a Design Layout Report. The Design Layout Report will be provided to the customer at no charge, and will be reissued or updated whenever these facilities are materially changed.

7.1.7 Acceptance Testing

At no additional charge, the Telephone Company will, at the customer's request, cooperatively test, at the time of installation, the following parameters:

(A) For Voice Grade analog and WATS Access Line services, acceptance tests will include test for loss, 3-tone slope, DC continuity, operational signaling, C-notched noise and C-message noise when these parameters are applicable and specified in the order for service. Additionally, for Voice Grade services, a balance (improved loss) test will be made if the customer has ordered the improved loss optional feature.

(B) For other analog services (i.e., Metallic, Telegraph, Program Audio, Video, Wideband Analog and Wideband Data) and for digital services (i.e., Digital Data High Capacity) acceptance tests will include tests for the parameters applicable to the service as specified in the order for service.

© 2022 Frontier Communications Parent, Inc. All rights reserved

7. Special Access Service (Cont'd)

7.1 General (Cont'd)

7.1.7 Acceptance Testing (Cont'd)

In addition to the above tests, Additional Cooperative Acceptance Testing for Voice Grade Service to test other parameters, as described in 13.3.4(B)(1) following, is available at the customer's request. All test results will be made available to the customer upon request.

7.1.8 Ordering Options and Conditions

Special Access Service is ordered under the Access Order provisions set forth in 5. preceding. Also included in that section are other charges which may be associated with ordering Special Access Service (e.g., Service Date Change Charges, Cancellation Charges, etc.)

7.1.9 Special Access Surcharge

In addition, a Special Access Surcharge as set forth in 7.5.14 following will apply to jurisdictionally interstate private line facilities provided by the Telephone Company to a customer, in accordance with regulations as set forth in 7.4.2 following.

7.1.10 Connections with Other Network Services

Special Access Service may be ordered to allow connections between the end user premises and serving wire center which provides Other Network Services.

7.2 Service Descriptions

For the purposes of ordering, there are ten categories of Special Access Service. These are:

Metallic (MT)
Telegraph Grade (TG)
Voice Grade (VG)
WATS Access Connection (WAC)
Program Audio (AP)
Video (TV)
Wideband Analog (WA)
Wideband Data (WD)
Digital Data (DA)
High Capacity (HC)

© 2022 Frontier Communications Parent, Inc. All rights reserved

7. Special Access Service (Cont'd)

7.2 Service Descriptions (Cont'd)

Each service consists of a basic channel to which a technical specifications package (customized or predefined), channel interface(s) and, when desired, optional features and functions are added to construct the service desired by the customer. Each of the components of the service are described in this section.

Customized technical specifications packages will be provided where technically feasible. If the Telephone Company determines that the requested parameter specifications are not compatible, the customer will be advised and given the opportunity to change the order.

When a customized channel is ordered the customer will be notified whether Additional Engineering Charges apply. In such cases, the customer will be given an estimate of the hours to be billed before any further action is taken on the order.

The channel description specifies the characteristics of the basic channel and indicates whether the channel is provided between customer designated premises or between a customer designated premises and a Telephone Company Hub where bridging or multiplexing functions are performed.

Information pertaining to the technical specifications packages indicates the transmission parameters that are available with each package. This information is displayed in a matrix with the transmission parameters listed down the left side and the packages listed across the top. Each package is identified by a code, e.g., VGC. The first two letters of the code indicate the category of Special Access Service to which the parameters are applicable. These two letter codes are shown above in parentheses following the category of Special Access Service. The letter "C" following the two letter code indicates the technical specifications package for a customized service. A numeric or alpha-numeric designation following the two letter code indicates the specific predefined package. For a customized service, the customer may select any parameters available with that category of service as long as the parameters are compatible. When appropriate, the Technical Reference which contains detailed specifications for the parameters is shown following the matrix.

Channel interfaces at each point of termination on a two-point service may be symmetrical or asymmetrical. On a multipoint service they may also be symmetrical or asymmetrical. However, communications can only be provided between points of termination with compatible channel interfaces. Only certain channel interfaces are compatible. These are set forth in 7.3.5 following in a combination format.

Only certain channel interface combinations are available with the predefined technical specifications packages. These are delineated in the Technical References set forth at the end of this 7.2. When a customized channel is requested, all channel interface combinations available with the specified type of service are available with the customized channel.

The optional features and functions available with each type of Special Access Service are described in this section. The optional features and functions information also indicates with which technical specifications packages they are available. Such information is displayed in a matrix with the optional feature or function listed down the left side and the technical specifications package listed across the top.

© 2022 Frontier Communications Parent, Inc. All rights reserved

7. Special Access Service (Cont'd)

7.2 Service Descriptions (Cont'd)

The Telephone Company will maintain existing transmission specifications on services installed prior to the effective date of this Guide except that the existing services with performance specifications exceeding the standard listed in this provision will be maintained at the performance levels specified in this Guide. All services installed after the effective date of this Guide will conform to the transmission specifications standards contained in this Guide or in the following Technical References for each category of service:

Metallic	TR-NPL-000336, Issue 1
Telegraph Grade	TR-NPL-000336, Issue 1
Voice Grade	TR-TSY-000335, Issue 3
	PUB41004, Table 4
WATS Access Line	GR-334-CORE, Issue 1
Program Audio	GR-337-CORE, Issue 1
Video	GR-338-CORE, Issue 1
Serial Component Video	SMPTE 0259M-2008
Digital Video Transport	SMPTE 0259M-2008
	ANSI T1.102-1993 (R2005)
	ANSI T1 102.01-1996 (R2001)
	ANSI T1 107-2002 (R2006)
	ATSC Standard A/53
	ATSC Standard A/54A
Wideband Analog	TR-NPL-000339
Wideband Data	TR-NPL-000340
Digital Data	TR-NWT-000341, Issue 2
Secondary Channel	TR-NPL-000157
	PUB62310
High Capacity	GR-54-CORE, Issue 1
	GR-342-CORE, Issue 1
	GR-499-CORE, Issue 3
Dedicated SONET	GR-253-CORE, Issue 4
	GR-1374-CORE, Issue 1
	ANSI T1.105.01-2000 (R2005)
	IEEE 802.3-2005/Cor2/D2.0-2007
	IEEE 802.3z-1998
	IEEE 802.3u-1995
Ethernet Private Line	GR-253-CORE, Issue 4
	IEEE 802.3-2005/Cor2/D2.0-2007
	IEEE 802.3z-1998
	IEEE 802.3u-1995
	ANSI INCITS 296-1997 (R2007)
	ANSI INCITS 303-1998 (R2003)

© 2022 Frontier Communications Parent, Inc. All rights reserved

7. Special Access Service (Cont'd)

7.2 Service Descriptions (Cont'd)

7.2.1 Metallic Service

(A) Basic Channel Description

A Metallic channel is an unconditioned two-wire channel capable of transmitting low speed varying signals at rates up to 30 baud. This channel is provided by metallic or equivalent facilities. Metallic channels are provided between customer designated premises or between a customer designated premises and a Telephone Company Hub where bridging functions are performed. Interoffice metallic facilities will be limited in length to a total of five miles per channel.

(B) Technical Specifications Packages

	Package MT-			
Parameter	C	1	2	3
DC Resistance Between Conductors	X	X	X	
Loop Resistance	X		X	
Shunt Capacitance	X		X	

The technical specifications are delineated in Technical Reference TR-NPL-000336.

(C) Channel Interfaces

Compatible channel interfaces are set forth in 7.3.5(A) following.

Optional Features and Functions

(1) Central Office Bridging Capability

(a) Three Premises Bridging - Provision of tip-to-tip and ring-to-ring connection in a central office of a metallic pair to a third customer designated premises.

(b) Series Bridging of up to 26 customer designated premises.

The following table shows the technical specifications packages with which the optional features and functions are available.

	Available with Technical Specifications Package-MT-			
	C	1	2	3
Three Premises Bridging	X	X		X
Series Bridging	X		X	

© 2022 Frontier Communications Parent, Inc. All rights reserved

7. Special Access Service (Cont'd)

7.2 Service Descriptions (Cont'd)

7.2.2 Telegraph Grade Service

(A) Basic Channel Description

A Telegraph Grade channel is an unconditioned channel capable of transmitting binary signals at rates of 0-75 baud or 0-150 baud. This channel is furnished for half-duplex or duplex operation and may be terminated as telegraph two-wire or four-wire, or, where facilities permit, as a four-wire in a digital format when used in conjunction with another Telegraph Channel Termination at the other end. Telegraph Grade channels are provided between customer designated premises or between a customer designated premises and a Telephone Company Hub.

(B) Technical Specifications Packages

	Package TG-		
Parameter	C		2
Telegraph Distortion	X	X	X

The technical specifications are delineated in Technical Reference TR-NPL-000336, Issue 1.

(C) Channel Interfaces

Compatible channel interfaces are set forth in 7.3.5(B) following.

Optional Features and Functions

(1) Telegraph Bridging (two-wire and four-wire)

The following table shows the technical specifications packages with which the optional features and functions are available.

	Available with Technical Specifications Package TG-		
	C		2
Telegraph Bridging	X	X	X

© 2022 Frontier Communications Parent, Inc. All rights reserved

7. Special Access Service (Cont'd)

7.2 Service Descriptions (Cont'd)

7.2.3 Voice Grade Service

(A) Basic Channel Description

A Voice Grade channel is a channel which provides voice frequency transmission capability in the nominal frequency range of 300 to 3000 Hz and may be terminated as analog two-wire or four-wire, or, where facilities permit, as a four-wire in a digital format when used in conjunction with another Voice Grade Channel Termination at the other end. Voice Grade channels are provided between customer designated premises or between a customer designated premises and a Telephone Company Hub.

(B) Technical Specifications Packages

		Package VG-											
Parameter	C*	1	2	3	4	5	6	7	8	9	10	11	12
Attenuation Distortion	X	X	X	X	X	X	X	X	X	X	X	X	X
C-Message Noise	X	X	X	X	X	X	X	X	X	X	X	X	X
Echo Control	X	X	X	X		X		X	X			X	X
Envelope Delay Distortion	X						X	X	X	X	X	X	X
Frequency Shift	X						X	X	X	X	X	X	X
Impulse Noise	X					X	X	X	X	X	X	X	X
Intermodulation Distortion		X						X	X	X	X	X	X
Loss Deviation	X	X	X	X	X	X	X	X	X	X	X	X	X
Phase Hits, Gain Hits, and Dropouts													X
Phase Jitter		X						X	X	X	X	X	X
Signal-to-C Message Noise													X
Signal-to-C Notch Noise	X					X	X	X	X	X	X	X	X

* The desired parameters are selected by the customer from the list of available parameters.

The technical specifications for these parameters (except for dropouts, gain hits, and phase hits) are delineated in TR-NWT-000335, Issue 3. The technical specifications for dropouts, phase hits, and gain hits are delineated in Technical Reference PUB 41004, Table 4.

© 2022 Frontier Communications Parent, Inc. All rights reserved

7. Special Access Service (Cont'd)

7.2 Service Descriptions (Cont'd)

7.2.3 Voice Grade Service (Cont'd)

(C) Channel Interfaces

The following channel interfaces for Voice Grade service do not require signaling capability: AH, DA, DB, DD, DE, DS, NO, PR and TF.

The following channel interfaces for Voice Grade service require signaling capability: AB, AC, CT, DX, DY, EA, EB, EC, EX, GO, GS, LA, LB, LC, LO, LR, LS, RV and SF.

Compatible channel interfaces are set forth in 7.3.5(C) following.

Optional Features and Functions

(1) Central Office Bridging Capability

(a) Voice Bridging (two-wire and four-wire)

(b) Data Bridging (two-wire and four-wire)

(c) Telephoto Bridging (two-wire and four-wire)

DATAPHONE Select-A-Station Bridging with sequential arrangement ports or addressable arrangement ports

(e) Telemetry and Alarm Bridging

Split Band, Active Bridging
Passive Bridging
Summation, Active Bridging

(2) Central Office Multiplexing

Voice to Telegraph Grade: An arrangement that converts a Voice Grade channel to Telegraph Grade channels using frequency division multiplexing.

(3) Conditioning

Conditioning provides more specific transmission characteristics for Voice Grade services. C-Type conditioning controls attenuation distortion and envelope delay distortion. Sealing Current helps maintain continuity on dry metallic loops.

© 2022 Frontier Communications Parent, Inc. All rights reserved

7. Special Access Service (Cont'd)

7.2 Service Descriptions (Cont'd)

7.2.3 Voice Grade Service (Cont'd)

Optional Features and Functions (Cont'd)

(3) Conditioning (Cont'd)

In addition, a customer may require that either the attenuation distortion or the envelope delay distortion, or both, be improved to more stringent specifications than those provided for C-Type conditioning. In these cases the customer has the option of ordering either Improved Attenuation Distortion or Improved Envelope Delay Distortion, or both, as needed.

For two-point services, the parameters apply to each service. For multipoint services, the parameters apply to each mid link or end link. C-Type conditioning and Data Capability may be combined on the same service.

(a) C-Type Conditioning

C-Type Conditioning is provided for the additional control of attenuation distortion and envelope delay distortion on data services. The attenuation distortion and envelope delay distortion specifications for C-Type Conditioning are:

Attenuation Distortion (Frequency Response) Relative to 1004 Hz	
Frequency Range (Hz)	Variation (dB)
504-2804	-1.0 to +3.0
304-3004	-2.0 to +6.0

Envelope Delay Distortion	
Frequency Range (Hz)	Variation (micro-seconds)
1004-2604	≤ 500
604-2604	≤500
504-2804	≤ 3000

© 2022 Frontier Communications Parent, Inc. All rights reserved

7. Special Access Service (Cont'd)

7.2 Service Descriptions (Cont'd)

7.2.3 Voice Grade Service (Cont'd)

Optional Features and Functions (Cont'd)

(3) Conditioning (Cont'd)

(b) Improved Attenuation Distortion

Improved attenuation distortion is provided for additional control of attenuation distortion. The improved attenuation distortion specifications are:

Attenuation Distortion (Frequency Response) Relative to 1004 Hz	
Frequency Range (Hz)	Variation (dB)
404-2804	-1.0 to +2.0
304-3004	-1.0 to +3.0
304-3204	-2.0 to +6.0

(c) Improved Envelope Delay Distortion

Improved envelope delay distortion is provided for additional control of envelope delay distortion. The improved envelope delay distortion specifications are:

Envelope Delay Distortion Variation	
Frequency Range (Hz)	(micro-seconds)
1004-2604	≤00
804-2604	≤ 200
604-2604	≤ 300
504-2804	≤ 600
504-3004	≤ 3000

Sealing Current Conditioning

Sealing Current Conditioning is provided to help maintain continuity on dry metallic loops. It is usually associated with four-wire DA or NO type channel interfaces.

© 2022 Frontier Communications Parent, Inc. All rights reserved

7. Special Access Service (Cont'd)

7.2 Service Descriptions (Cont'd)

7.2.3 Voice Grade Service (Cont'd)

Optional Features and Functions (Cont'd)

(4) Customer Specified Premises Receive Level

This option allows the customer to specify the receive level at the Point of Termination. The level must be within a specific range on effective four-wire transmission. The ranges are delineated in Technical Reference TR-NWT-000335, Issue 3.

(5) Improved Termination and Improved Return Loss

(a) Improved Termination - On Effective Four-Wire Transmission at Four-Wire Point of Termination (applicable to each two-wire port): Provides for a fixed 600 ohm impedance, variable level range and simplex reversal. Telephone Company equipment is required at the customer's premises where this option is ordered. The Improved Termination parameters are delineated in Technical Reference TR-NWT-000335, Issue 3.

(b) Improved Return Loss - On Effective Two-Wire Transmission at Two-Wire Point of Termination: Provides for more stringent Echo Control Specifications. In order for this option to be applicable, the transmission path must be four-wire at one POT and two-wire at the other POT. Placement of Telephone Company equipment may be required at the customer's premises with the two-wire POT. The Improved Return Loss parameters are delineated in Technical Reference TR-NWT-000335, Issue 3.

(6) Data Capability

Data Capability provides transmission characteristics suitable for data communications. Specifically, Data Capability provides for the control of Signal to C-Notched Noise Ratio and intermodulation distortion. It is available for two-point services or multipoint services.

The Signal to C-Notched Noise Ratio and intermodulation distortion parameters for Data Capability are:

- Signal to C-Notched Noise Ratio is equal to or greater than 32dB
- Intermodulation distortion:
- Signal to second order modulation products (R2) is equal to or greater than 38dB
- Signal to third order modulation products (R3) is equal to or greater than 42dB

When a service equipped with Data Capability is used for voice communications, the quality of the voice transmission may not be satisfactory.

© 2022 Frontier Communications Parent, Inc. All rights reserved

7. Special Access Service (Cont'd)

7.2 Service Descriptions (Cont'd)

7.2.3 Voice Grade Service (Cont'd)

Optional Features and Functions (Cont'd)

(7) Telephoto Capability

Telephoto Capability provides transmission characteristics suitable for telephotographic communications. Specifically, Telephoto Capability is provided for the control of attenuation distortion and envelope delay distortion on telephotographic services. The attenuation distortion and envelope delay distortion parameters for Telephoto Capability are:

Attenuation Distortion (1004 Hz Reference)		Envelope Delay Distortion	
Frequency Range (Hz)	Variation (dB)	Frequency Range (Hz)	Variation (mcs)
500-3000	-0.5 to +1.5	1000-2600	110
300-3200	-1.0 to +2.5	800-2800	180

(8) Signaling Capability

Signaling Capability provides for the process by which one customer premises alerts another customer premises on the same service with which it wishes to communicate.

(9) Selective Signaling Arrangement

An arrangement that permits code selective ringing for up to ten codes on a multipoint service.

(10) Transfer Arrangement

An arrangement that affords the customer an additional measure of flexibility in the use of their access channel(s). The arrangement can be utilized to transfer a leg of a Special Access Service to another channel that terminates in either the same or a different customer premises. A key activated or dial-up control service is required to operate the transfer arrangement. A spare channel, if required, is not included as part of the option.

© 2022 Frontier Communications Parent, Inc. All rights reserved

7. Special Access Service (Cont'd)

7.2 Service Descriptions (Cont'd)

7.2.3 Voice Grade Service (Cont'd)

Optional Features and Functions (Cont'd)

The following table shows the technical specifications packages with which the optional features and functions are available.

		Available with Technical Specifications Package VG-											
		C	1	2	3	4	5	6	7	8	9	10	11	12
C-Type Conditioning		X					X	X	X	X	X	X		
Central Office Bridging Capability		X		X			X	X				X	X	X
Central Office Multiplexing		X						X						
Data Capability		X						X	X			X		
Improved Termination For Effective Four-Wire Transmission		X	X	X	X	X	X	X	X	X	X	X	X	X
Improved Return Loss For Effective Two-Wire Transmission		X		X	X			X	X			X		
Sealing Current Conditioning For Effective Four-Wire Transmission	X	X	X		X									
Selective Signaling Arrangement		X		X										
Signaling Capability		X	X	X	X				X	X	X			
Telephoto Capability		X											X	
Transfer Arrangement		X	X	X	X	X	X	X	X	X	X	X	X	

(11) Effective Four-Wire Transmission with Two-Wire Interface

When a customer requests that an effective Four-Wire channel be terminated with a Two-Wire interface at the customer designated premises, then this optional feature applies. Placement of Telephone Company Equipment (Hybrid) is required at the customer's premises to convert the Four-Wire channel to the Two-Wire POT. When this option is ordered, a Four-Wire channel termination charge applies. Per the voice grade technicalreferences, certain voice grade service are always provisioned as Four-Wire services and will be billed as a Four-Wire Channel Termination.

© 2022 Frontier Communications Parent, Inc. All rights reserved

7. Special Access Service (Cont'd)

7.2 Service Descriptions (Cont'd)

7.2.3 Voice Grade Service (Cont'd)

(E) WATS Access Line Service

(1) Basic Channel Description

A WATS Access Line Service is a channel which provides voice frequency transmission capability. The service provides customer premise to customer premise connection through the combination of a WATS Access Connection (WAC), a dedicated channel between the customer's end user's premises and a WATS Serving Office (WSO) equipped with Lineside BSA or Trunkside BSAs service as set forth in Section 6 preceding. The WAC is dedicated to one customer who has the ability to transport traffic interstate.

The WAC is comprised of a Channel Termination from the customer's end user serving wire center to the customer's end user premises.

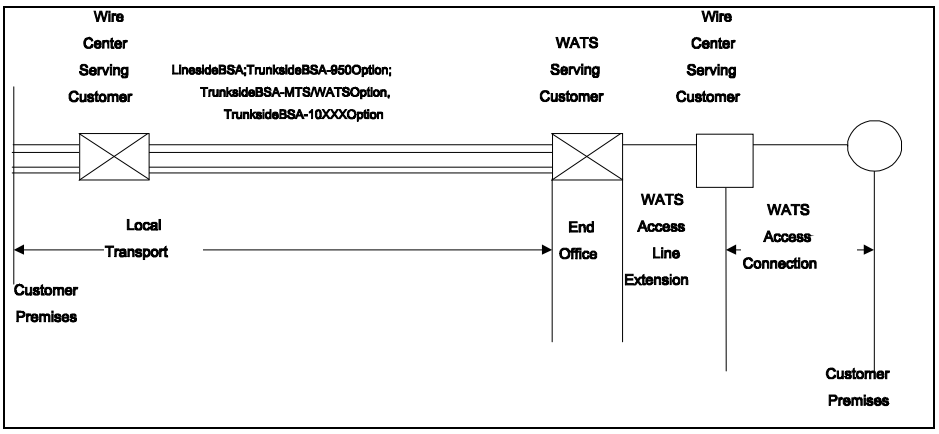

WATS Access Line Service is service arranged for originating, terminating or two way transmission to or from an end user's premises at the option of the customer. It is provided with rotary dial or dual tone multifrequency address signaling and with either loop start or ground start signaling. Two way WATS Access Line Service is subject to recording capability and central office capacity.

Originating only and Two Way (originating only) WATS Access Line Service customers, at their option and at no charge, may be provided access to test lines in their local central office to test the WATS Access Connection. Access to two types of lines is available, balance (Type 100) and milliwatt (Type 102). Where available, this feature is only provided in Telephone Company electronic end offices in which WATS Access Connections are provided.

© 2022 Frontier Communications Parent, Inc. All rights reserved

7. Special Access Service (Cont'd)

7.2 Service Descriptions (Cont'd)

7.2.3 Voice Grade Service (Cont'd)

(E) WATS Access Line Service (Cont'd)

(2) Technical Specifications Packages

	Packages WAL -		
Parameters	1	2	3
Attenuation Distortion	X	X	
Bit Error Rate			X
C-Message Noise	X	X	
Echo Control	X	X	
Envelop Delay Distortion	X	X	
Frequency Shift	X	X	
Impulse Noise	X	X	
Intermodulation Distortion	X	X	
Loss Deviation	X	X	
Phase Jitter	X	X	
Signal-to-C Notch Noise	X	X	

WACs are offered as either effective two-wire, effective four-wire, high capacity or improved two-wire access connections. The technical limitations are delineated in Technical Reference GR-334-CORE, Issue 1.

(3) Channel Interfaces

Compatible channel interfaces are set forth in 7.3.5 following.

(4) Optional Features and Functions

(1) Central Office Bridging Capability

(a) Voice Bridging (two-wire and four-wire)

(2) Improved Two-Wire Transmission Specifications

© 2022 Frontier Communications Parent, Inc. All rights reserved

7. Special Access Service (Cont'd)

7.2 Service Descriptions (Cont'd)

7.2.3 Voice Grade Service (Cont'd)

(E) WATS Access Line Service (Cont'd)

(5) WATS Access Line Extensions (WALE)

(1) When WATS Access Line Service is ordered to the end office that normally serves the customer and that office is a non-equal access end office without WATS screening capability, WATS screening is provided from the nearest equal access or non-equal access WATS screening office (WSO).

(2) For non-Trunkside BSA - MTS/WATS Option customers, when service is ordered to the end office that normally serves the customer and that office is a non-equal access end office with WATS screening capability, service is provided from the nearest equal access end office with WATS screening capability (WSO).

(3) When WATS Access Line Service is ordered to the end office that normally serves the customer and that office is an equal access end office without WATS screening capability, service is provided from the nearest equal access end office with WATS screening capability (WSO).

In all cases, there is no channel mileage applicable to the distance between the end office that normally serves the customer and the office that provides the WATS screening capability (WSO).

© 2022 Frontier Communications Parent, Inc. All rights reserved

7. Special Access Service (Cont'd)

7.2 Service Descriptions (Cont'd)

7.2.4 Program Audio Service

(A) Basic Channel Description

A Program Audio channel is a channel measured in Hz for the transmission of a complex signal voltage. The actual bandwidth is a function of the channel interface selected by the customer. Only one-way transmission is provided. Program Audio channels are provided between customer designated premises or between a customer designated premises and a Telephone Company Hub.

(B) Technical Specifications Packages

		Package AP-			
Parameter	C*	1	2	3	4
Actual Measured Loss	X	X	X	X	X
Amplitude Tracking					X
Crosstalk	X	X	X	X	X
Distortion Tracking					X
Gain/Frequency Distortion	X	X	X	X	X
Group Delay					X
Noise	X	X	X	X	X
Phase Tracking					X
Short-Term Gain Stability					X
Short-Term Loss					X
Total Distortion	X	X	X	X	X

The technical specifications are delineated in Technical Reference PUB 62503 and associated Addendums.

* The desired parameters are selected by the customer from the list of available parameters.

© 2022 Frontier Communications Parent, Inc. All rights reserved

7. Special Access Service (Cont'd)

7.2 Service Descriptions (Cont'd)

7.2.4 Program Audio Service (Cont'd)

(C) Channel Interfaces

The following channel interfaces (CIs) define the bandwidths that are available for a Program Audio channel:

CI	Bandwidth
PG-1	Nominal frequency from 50 to 15000 Hz
PG-3	Nominal frequency from 200 to 3500 Hz
PG-5	Nominal frequency from 100 to 5000 Hz
PG-8	Nominal frequency from 50 to 8000 Hz

Compatible channel interfaces are set forth in 7.3.5(E) following.

Optional Features and Functions

(1) Central Office Bridging Capability

Distribution Amplifier

(2) Gain Conditioning

Control of 1004 Hz AML at initiation of service to 0 dB ± 0.5 dB.

(3) Stereo

Provision of a pair of gain/phase equalized channels for stereo applications. (Additional AP channel must be ordered separately.)

The following table shows the technical specifications packages with which the optional features and functions are available.

		Available with Technical Specifications Package AP-			
	C*	1	2	3	4
Central Office Bridging Capability	X	X	X	X	X
Gain Conditioning	X	X	X	X	X
Stereo	X				X

© 2022 Frontier Communications Parent, Inc. All rights reserved

7. Special Access Service (Cont'd)

7.2 Service Descriptions (Cont'd)

7.2.5 Video Service

(A) Service Description

A basic Video channel is a channel with one-way transmission capability for a standard 525 line/60 field monochrome, or National Television Systems Committee color, video signal and one or two associated 5 or 15 kHz audio signal(s). Video channels are provided between customer designated premises or between a customer designated premises and a Telephone Company Hub.

Video Service is provisioned as either Basic Service or as Multichannel Service.

1. Basic Video Service

Basic Video Service is a single video channel with one or two associated 5 or 15 kHz audio signals. The audio signal may be either diplexed or provided as separate channels. The provision and the bandwidth of the associated audio signal(s) is a function of the channel interface selected by the customer.

Basic Video Service is provided on a full-time or part-time (i.e., daily) basis. At the option of the customer, Basic Video Service channels may be provided under a Service Discount Plan as specified in Section 25.2 following.

2. Multichannel Video Service

Multichannel Video Service is a service arrangement of three to eight video channels provisioned over a single fiber. One or two separate 15 kHz audio signal(s) is associated with each video channel.

Multichannel Video Service may be provisioned with two types of channel terminations: one in which all electronics are owned and provided by the Telephone Company, and one in which a receiver or transmitter is provided by the Telephone Company and the customer provides the remaining electronic equipment. Every Multichannel Service requires at least one end location where all electronics are provided by the Telephone Company. In the premises to Hub configuration, all equipment at the Hub will be owned by the Telephone Company.

© 2022 Frontier Communications Parent, Inc. All rights reserved

7. Special Access Service (Cont'd)

7.2 Service Descriptions (Cont'd)

7.2.5 Video Service

(A) Service Description (Cont'd)

For both services, Basic and Multichannel Video, the use of up to twenty-five (25) feet of coaxial cable from the point of entry into the customer's building to the channel interface is included in the Channel Termination rate element. In the event the customer requests that the Company extend the location of the channel interface beyond 25 feet, and the Company agrees to extend the communications path, the charges set forth for Other Labor as specified in Section 13.2.5 following will apply for the extended portion of the communications path. The extended communications path is subject to distance limitations, which are specific to the communications path being extended.

(B) Technical Specifications Packages

VIDEO PARAMETER	Package TV-C	Package TV-1	Package TV-2
Insertion Gain	X	X	X
Field-Time Distortion	X	X	X
Line-Time Distortion	X	X	X
Short-Time Distortion	X	X	X
Chrominance-Luminance Gain Inequality	X	X	X
Chrominance-Luminance Delay Inequality	X	X	X
Amplitude/Freq. Characteristic	X	X	X
Luminance Non-Linear Distortion	X	X	X
Chrominance Non-Linear Gain Distortion	X	X	X
Chrominance Non-Linear Phase Distortion	X	X	X
Transient Sync. Signal Non-Linearity	X	X	X
Dynamic Gain Distortion			
-Picture Signal	X	X	X
-Sync Signal	X	X	X
Differential Gain	X	X	X
Differential Phase	X	X	X
Chrominance-Luminance Intermod.	X	X	X

© 2022 Frontier Communications Parent, Inc. All rights reserved

7. Special Access Service (Cont'd)

7.2 Service Descriptions (Cont'd)

7.2.5 Video Service

(B) Technical Specifications Packages (Cont'd)

ASSOCIATED AUDIO PARAMETER	C	Package TV-1	Package TV-2
Insertion Gain	X	X	X
Amplitude/Freq. Characteristic	X	X	X
Total Harmonic Distortion + Noise	X	X	X
Maximum Steady-State Test Levels	X	X	X
Gain Diff. Between Channels		X	X
Phase Diff. Between Channels	X	X	X
Crosstalk	X	X	X
Audio-To-Video Time Differential	X	X	X

The desired parameters are selected by the customer from the list of available parameters. TV1 provides for 1 Video signal and 1 or 2 15KHz Audio signals. TV2 provides for 1 Video signal and 1 or 2 5KHz Audio signals.

The technical specifications are delineated in Technical Reference GR-338-CORE, Issue 1.

(C) Channel Interfaces

The following channel interfaces (CIs) define the bandwidth and the provision of the audio signal(s) associated with a Video channel:

CI	Bandwidth	Audio Provision
2TV6-1	15kHz	Channel, diplexed
2TV6-2	15kHz	2 Channels, diplexed
2TV7-1	15kHz	Channel, diplexed

© 2022 Frontier Communications Parent, Inc. All rights reserved

7. Special Access Service (Cont'd)

7.2 Service Descriptions (Cont'd)

7.2.5 Video Service (Cont'd)

(C) Channel Interfaces (Cont'd)

CI	Audio Bandwidth	Provision
2TV7-2	15kHz	2 Channels, diplexed
4TV6-5	5kHz	1 Channel, separate
4TV6-15	15kHz	1 Channel, separate
4TV7-5	5kHz	1 Channel, separate
4TV7-15	15kHz	1 Channel, separate
6TV6-5	5kHz	2 Channels, separate
6TV6-15	15kHz	2 Channels, separate
6TV7-5	5kHz	2 Channels, separate
6TV7-15	15kHz	2 Channels, separate

Compatible channel interfaces are set forth in 7.3.5(f) following.

Optional Features and Functions

(1) Video Matrix Switching*

Video switch arrangements are only provisioned at Video Hubs as specified in N.E.C.A. Tariff F.C.C. No. 4. A separate voice grade data control channel is required to operate the switch arrangement and is not included as part of the option.

(a) Basic 20X10 Video Switch Arrangement*

An arrangement which will enable the customer to switch video transmission carried on special access video channels originating from up to twenty (20) locations and terminating at up to ten (10) locations (20 x 10).

(b) Video Switch Arrangement Expansion Module*

The expansion module is additional equipment which allows expansion of a basic 20X10 video switch to another 20X10 video switch to allow operation to twenty (20) originating and twenty (20) terminating locations (20X20).

(c) 10X1 Video Switch Arrangement*

An arrangement which allows a customer with one termination to originate from up to 10 locations.

*** Note: Effective April 20, 2002, the services described in (1)(a) – (f) are no longer available to new customers. Instead, new customers should see (5) for Advanced Video Switching.**

© 2022 Frontier Communications Parent, Inc. All rights reserved

7. Special Access Service (Cont'd)

7.2 Service Descriptions (Cont'd)

7.2.5 Video Service (Cont'd)

Optional Features and Functions (Cont'd)

(1) Video Matrix Switching* (Cont'd)

32X32 Video Switch Arrangement*

An arrangement that allows the customer to switch transmissions originating at up to 32 locations and terminating at up to 32 locations. This arrangement includes one general purpose interface (GPI); see paragraph f) following.

(e) 48 X 48 Video Switch Arrangement*

An arrangement that allows the customer to switch transmissions originating at up to 48 locations and terminating at up to 48 locations. This switch is equipped with one general purpose interface.

(f) General Purpose Interface*

A general purpose interface (GPI) provides two interface ports through which the customer can exercise direct real time control of the matrix switch. Optional GPIs are applicable for the 32 X 32 and higher matrix arrangements.

(2) Video Patch Arrangement

An arrangement which allows video switch customers to connect video switches located in the same Video Hub and switch video channels between each other. This arrangement is only provisioned in Video Hubs as specified in N.E.C.A. Tariff F.C.C. No. 4.

*** Note: Effective April 20, 2002, the services described in (1)(a) – (f) are no longer available to new customers. Instead, new customers should see (5) for Advanced Video Switching.**

© 2022 Frontier Communications Parent, Inc. All rights reserved

7. Special Access Service (Cont'd)

7.2 Service Descriptions (Cont'd)

7.2.5 Video Service (Cont'd)

Optional Features and Functions (Cont'd)

(3) 1X6 Video Distribution Amplifier

A distribution amplifier is additional equipment which amplifies one video channel to produce six identical output signals. This equipment will be located at Telephone Company central offices.

(4) Additional Audio Channels

A 3rd and 4th audio channel arrangement is available for each video channel. Additional channels for Basic Service are either 5 or 15KHz signals which may be diplexed or provided as one or two separate channels. Additional audio channels for Multichannel Service are 15KHz signals over separate channels.

(5) Advanced Video Switching

Advanced Video Switching (AVS) is available with certain Video Services which allows the customer to switch compatible video channels provided in premises to video hub service configurations.

The following video services require a dedicated switching arrangement to provide AVS:

- Basic Video Service (BVS)
- Multichannel Video Service (MVS)
- Serial Component Video Service (SCVS)
- 45 Mbps Digital Video Transport Service (45Mbps DVS)

The following video service may be ordered as (i) a dedicated switching arrangement; or (ii) on an individual channel basis with each channel being connected to a port on a Telephone Company shared switching arrangement.

- High-Definition Digital Video Transport Service (Hi-Def DVTS)

Individual channel connections are subject to available capacity on the shared switch.

© 2022 Frontier Communications Parent, Inc. All rights reserved

7. Special Access Service (Cont'd)

7.2 Service Descriptions (Cont'd)

7.2.5 Video Service (Cont'd)

Optional Features and Functions (Cont'd)

(5) Advanced Video Switching (Cont'd)

A matrix in the video switch defines the size of the AVS and the mapping of services to specific input/output ports. Switching matrixes can be established in 32 X 32, 64 X 64, 96 X 64, 96 X 96, 128 X 96, and 128 X 128 input/output port configurations.

AVS is available with full-time and part-time video services. Compatible services may be switched as full-time to full-time, full-time to part-time or part-time to part-time service configurations.

When more than one type of service is supported on the AVS, interconnection of different service types is prohibited, e.g., a BVS channel may not be connected to a SCVS channel. Compatible video may be switched to create new end-to-end channels. A customer may not exceed the capacity of its AVS arrangement.

The following services or combination of services require a minimum switch capacity of 32 inputs and 32 outputs (32 x 32).

- All Basic Video Services (BVS)
- Multichannel Video Service
- All 45 Mbps Digital Video Transport Service (45Mbps DVTS)
- All Serial Component Video Service (SCVS)
- Combinations of BVS, Multichannel Video Service and /or 45Mbps DVTS
- All High-Definition Digital Transport Service (Hi-Def DVTS) when ordered as a dedicated switching arrangement.

The following services require a minimum switch capacity of 64 X 64.

- Combination of BVS and SCVS
- Combination of 45Mbps DVTS and SCVS.

AVS is provided at the designated Telephone Company Video Operation Center (TVOC)/hub as specified in National Exchange Carrier Association Inc. (NECA), Tariff F.C.C. No. 4.

When AVS is provisioned as a dedicated switching arrangement, the customer must perform all switching of the video channels connected to its AVS. A separate dial-up line or Special Access service channel is required to connect the customer's designated premises to its AVS located in the TVOC.

© 2022 Frontier Communications Parent, Inc. All rights reserved

7. Special Access Service (Cont'd)

7.2 Service Descriptions (Cont'd)

7.2.5 Video Service (Cont'd)

Optional Features and Functions (Cont'd)

(5) Advanced Video Switching (Cont'd)

When AVS is provisioned as a dedicated switching arrangement, the customer may share its AVS arrangement, however, only the customer will be on record with the Telephone Company with authority to manage and control the switch. The customer of record will also be the responsible bill party.

When AVS is provisioned through a Telephone Company shared switching arrangement, the Telephone Company will perform all switching of video services connected through the shared switch.

(a) Application of Rates and Charges

(i)AVS provisioned as a dedicated switching arrangement

When AVS is provisioned as a dedicated switching arrangement, AVS rates and charges apply as a Premises to Hub Channel Termination for each connection to the TVOC. The rates are differentiated by the type of service involved. The Premises to Hub Channel Termination provides for the communications path between a customer designated premises and the dedicated switching arrangement at the TVOC where switching is performed. When the wire center serving the customer's designated premises and the TVOC are not located in the same wire center, channel mileage applies between the two wire centers involved.

In addition to the Premises to Hub Channel Terminations, a recurring monthly rate and nonrecurring charge applies for the switch capacity of the dedicated switching arrangement. The dedicated switching arrangement is provided for a term of either 5 years or 10 years as selected by the customer.

© 2022 Frontier Communications Parent, Inc. All rights reserved

7. Special Access Service (Cont'd)

7.2 Service Descriptions (Cont'd)

7.2.5 Video Service (Cont'd)

Optional Features and Functions (Cont'd)

(5) Advanced Video Switching (Cont'd)

(a) Application of Rates and Charges (Cont'd)

(ii) AVS provisioned through a shared switching arrangement

AVS rates and charges apply as a Premises to Hub Channel Termination for each connection to the TVOC. The rates are differentiated by the type of service involved. The Premises to Hub Channel Termination provides for the communications path between a customer designated premises and the Telephone Company shared switching arrangement at the TVOC where switching is performed. When the wire center serving the customer's designated premises and the TVOC are not located in the same wire center, channel mileage applies between the two wire centers involved.

In addition to the Premises to Hub Channel Terminations, a recurring monthly rate applies for the connection to a switch port on the Telephone Company shared switching arrangement. The AVS Switch Port is provided on a month-to-month basis or for a term of either 1, 3 or 5 years as selected by the customer.

© 2022 Frontier Communications Parent, Inc. All rights reserved

7. Special Access Service (Cont'd)

7.2 Service Descriptions (Cont'd)

7.2.5 Video Service (Cont'd)

(E) Serial Component Video Service

(1) Service Description

Serial Component Video Service (SCVS) is a broadband digital video transport channel with one-way transmission capability. SCVS provides 270 Mbps high quality video as defined by the Society of Motion Picture and Television Engineers (SMPTE) Standard 259M. This standard describes a serial digital interface, 525 line/60 field National Television Systems Committee (NTSC) digital television equipment operating with 4:2:2 serial component signals that conform to American National Standards Institute (ANSI) digital format. The service may include up to four (4) 20 kHz Audio Engineering Society (AES)/European Broadcasting Union (EBU) digital audio signals.

SCVS is provided on a full-time or part-time (i.e., daily) basis over digital network facilities between customer designated premises or between a customer designated premises and a video hub where compatible channels may be switched. At the customer's premises, the Company will install coaxial cable for the transmission facilities within the building up to the channel interface. The channel interface enables delivery of digital audio signals, which are embedded in the digital transmission. It is the responsibility of the customer to embed the audio and ancillary data in the digital transmission. The quality of the video signal may be impaired if the distance of the coaxial cable results in transmission parameters which are not within the limits specified in the technical publication set forth in (2) following.

Where suitable facilities are not available to provide SCVS, Special Construction charges as set forth in Section 5.1.3 preceding may apply.

SCVS is compatible with the optional Advanced Video Switching feature described in 7.2.5 (5) preceding.

(2) Technical Specifications

The technical specification for SCVS are delineated in Technical Reference SMPTE 0259M-2008, Revised 1997 with one exception. The Company will only accept a 75 ohm impedance interface to or from a customer provided high- quality coaxial cable.

© 2022 Frontier Communications Parent, Inc. All rights reserved

7. Special Access Service (Cont'd)

7.2 Service Descriptions (Cont'd)

7.2.5 Video Service (Cont'd)

(E) Serial Component Video Service (Cont'd)

(3) Channel Interfaces

The following channel interface (CI) defines the provision of audio signals associated with SCVS.

CI	Description
02TD6.E	Uncompressed serial component digital video transport with ancillary channels through the serial digital interface.

(4) Terms and Conditions

(a) SCVS is available on a part-time basis with daily rates or on a full-time basis as a month-to month, 3-year or 5-year term plan.

(b) The minimum service period for full-time SCVS is one year. A minimum service period charge applies if SCVS is disconnected in less than one year except when the requirements for portability are met as set forth in (f) following.

(c) SCVS is available based on negotiated intervals as described in 5.2.1(B) preceding.

At the expiration of a 3 or 5-year term plan, the service will be converted to the Month-to-Month term plan and rated at the then prevailing rate for Month-to-Month service unless the customer subscribes to a new term plan.

(e) Early termination of the 3 or 5-year term plan is subject to termination liability, except when the customer subscribes to any new video term plan of equal or greater value in revenue than the remainder of the present plan, or meets replacement requirements for portability as described in f) following.

© 2022 Frontier Communications Parent, Inc. All rights reserved

7. Special Access Service (Cont'd)

7.2 Service Descriptions (Cont'd)

7.2.5 Video Service (Cont'd)

(E) Serial Component Video Service (Cont'd)

(4) Terms and Conditions (Cont'd)

(f) Portability is the replacement of a service under a term plan with another service for the balance of the term. Portability requirements are:

- The replacement service must be of the same speed or type, and must not already be in a term plan.
- The replacement service must be ordered within 30 days of disconnection of the original service.
- The number of replacement services is equal or greater than the number of services being disconnected.
- When a SCVS is moved to a new location, portability will apply provided that the same customer of record is retained at each of the points of termination involved. Only one move is permitted within a calendar year.

When the terms and conditions for portability are met, the new/replacement service is subject to all of the same terms and conditions that applied to the service being replaced. That is, the new/replacement service must satisfy the balance of the minimum service period requirement if not already met, and the balance of the commitment period remaining in the term plan.

© 2022 Frontier Communications Parent, Inc. All rights reserved

7. Special Access Service (Cont'd)

7.2 Service Descriptions (Cont'd)

7.2.5 Video Service (Cont'd)

(E) Serial Component Video Service (Cont'd)

(4) Terms and Conditions (Cont'd)

g) Termination Liability

Termination liability is in addition to the minimum period charge and is calculated as shown in i) or ii) following. When calculating termination liability charges, the Company will apply the option that provides the customer with the lowest termination liability

i) Option I

Termination liability is 50% of the monthly rates for each month and fraction thereof remaining between the minimum period and the end of the selected term plan/commitment period.

ii) Option 2

For services discontinued within the first year and prior to the end of the selected commitment period, the termination liability charge will be the difference between the full basic Month-to-Month rates and the term plan rates for the period the service has been in effect.

For services discontinued after the first 12 months of a term plan but prior to the end of the selected plan period, the following applies:

- Where there is no commitment period less than the actual time the service has been in effect the termination liability charge will be the difference between the full basic Month-to-Month rate and the selected term plan rate for the period the plan has been in effect.

- Where there is a commitment period less than the actual time the service has been in effect, the termination liability charge will be the difference between the monthly rate for the longest term plan that could have been satisfied prior to termination of the service and the monthly rate for the selected term plan multiplied by the actual number of months the plan has been in effect.

© 2022 Frontier Communications Parent, Inc. All rights reserved

7. Special Access Service (Cont'd)

7.2 Service Descriptions (Cont'd)

7.2.5 Video Service (Cont'd)

(E) Serial Component Video Service (Cont'd)

(5) Rate Regulations

a) A Channel Termination charge applies for each termination of SCVS. Included in the Channel Termination rate element is the use of up to twenty-five (25) feet of coaxial cable from the point at which the video service enters the customer's building to the channel interface. In the event that the customer requests that the Company extend the location of the channel interface beyond 25 feet, and the Company agrees to extend the communications path, the charges set forth for Other Labor as specified in Section 13.2.5 following will apply for the extended portion of the communications path. The extended communications path is subject to distance limitations, which are specific to the communications path being extended.

Serial Component Video Service may be connected to a Telephone Company provided integrated optical service, where such connections are technically and operationally feasible, as determined by the Telephone Company. A Serial Component Video Service Channel Termination charge will not apply at the integrated optical service end of the circuit.

b) A fixed and per mile Channel Mileage rate element applies for the transmission facility between the serving wire centers of the customer's designated premises.

© 2022 Frontier Communications Parent, Inc. All rights reserved

7. Special Access Service (Cont'd)

7.2 Service Descriptions (Cont'd)

7.2.5 Video Service (Cont'd)

(F) High-Definition (Hi-Def) Digital Video Transport Service

(1) Service Description

High-Definition (Hi-Def) Digital Video Transport Service (Hi-Def DVTS) is a broadband digital video transport channel with one-way transmission capability of 19.39 Mbps high quality video as defined in American National Standard Institute/The Society of Motion Picture and Television Engineers (ANSI/SMPTE) Standard 310M or with one-way transmission capability of 1.485 Gbps as defined in Technical Reference SMPTE Standard 0292M-2001. These standards describe a serial digital interface for equipment conforming to the SMPTE and Advanced Television Systems Committee (ATSC) digital television standards. Hi-Def DVTS automatically detects the customer input as 19.39 Mbps or 1.485 Gbps and provides the compatible transport of the signal to the corresponding receive channel termination in accordance with SMPTE standards. Hi-Def DVTS is provided with an electrical interface and operates with a standard broadcast data stream as specified in the appropriate standards; see (2), Technical Specifications below.

Hi-Def DVTS is provided over digital network facilities in a premises-to-premises configuration (between customer designated premises) or in a premises-to-hub configuration (between a customer designated premises and a video hub where channels may be switched). At the customer's premises, the Company will install fiber optic and/or coaxial cable for the transmission facilities within the building up to the channel interface. The channel interface enables delivery of multiple video channels and/or digital audio signals, which are embedded in the digital transmission. It is the responsibility of the customer to embed or de-embed the audio and ancillary data in the digital transmission. The quality of the video signal may be impaired if the distance of the coaxial cable results in transmission parameters which are not within the limits specified in the technical publication set forth in (2) following.

Hi-Def DVTS is compatible with the optional Advanced Video Switching feature described in 7.2.5 (5) preceding.

Where suitable facilities are not available to provide Hi-Def DVTS, Special Construction charges as set forth in Section 5.1.3 preceding may apply.

© 2022 Frontier Communications Parent, Inc. All rights reserved

7. Special Access Service (Cont'd)

7.2 Service Descriptions (Cont'd)

7.2.5 Video Service (Cont'd)

(F) High-Definition (Hi-Def) Digital Video Transport Service (Cont'd)

(2) Technical Specifications

The technical specification for Hi-Def DVTS are delineated in Technical Reference ATSC Standard A/53 Digital Television Standard, ATSC Document A/54A Guide to the Use of ATSC Television Standard, SMPTE 0310M-2004, Television Synchronous Serial Interface for MPEG-2 Digital Transport Streams (19.39 Mbps), and SMPTE 292M-1998 (1.485 Gbps).

The Company will only accept a 75-ohm impedance interface to/from customer provided high quality coaxial cable that meets Company transmission requirements.

(3) Channel Interfaces

The following channel interface (CI) is available with Hi-Def DVTS.

O2TB6

(4) Terms and Conditions

a) Hi-Def DVTS is available on a month-to-month basis or as a 1, 3 or 5-year term plan.

b) The minimum service period for Hi-Def DVTS provided on a month-to-month basis is one (1) month. The minimum service period for Hi-Def DVTS provided under a term plan is three (3) months. The minimum period liability is forgiven when a term plan customer elects to switch to another video service with a minimum period of the same or longer duration.

c) Hi-Def DVTS is available based on negotiated intervals as described in 5.2.1(B) preceding.

d) At the expiration of a term plan, the customer's Hi-Def DVTS will automatically be renewed for the same term at the current prevailing rate or the customer may subscribe to a new plan. To terminate service without incurring new termination liabilities, the customer must disconnect service within 90 days of the expiration date.

© 2022 Frontier Communications Parent, Inc. All rights reserved

7.2 Service Descriptions (Cont'd)

7.2.5 Video Service (Cont'd)

(F) High-Definition (Hi-Def) Digital Video Transport Service (Cont'd)

(4) Terms and Conditions (Cont'd)

e) Early termination of the term plan is subject to termination liability, except when the customer subscribes to any new video term plan of equal or greater value in revenue than the remainder of the present plan.

Termination liability is in addition to the minimum period charge and is calculated as shown in i) or ii) following. When calculating termination liability charges, the Company will apply the option that provides the customer with the lowest termination liability.

i) Option I

Termination liability is 100% of the monthly rates for each month and fraction thereof remaining in the balance of the selected term plan/commitment period.

ii) Option 2

The termination liability charge is the difference between the monthly rate for the longest term plan that could have been satisfied prior to termination of the service and the monthly rate for the selected term plan multiplied by the actual number of months the plan has been in effect.

(5) Rate Regulations

The rates and charges for Hi-Def DVTS include channel terminations and channel mileage:

a) A Channel Termination charge applies for each termination of Hi-Def DVTS. Included in the Channel Termination rate element is the use of up to twenty-five (25) feet of coaxial cable from the point at which the video service enters the customer's building to the channel interface. In the event that the customer requests that the Telephone Company extend the location of the channel interface beyond 25 feet, and the Telephone Company agrees to extend the communications path, the charges set forth for Other Labor as specified in Section 13.2.5 following will apply for the extended portion of the communications path. The extended communications path is subject to distance limitations, which are specific to the communications path being extended.

b) The Channel Mileage rate element applies on a fixed and per mile basis for the transmission facilities between the serving wire centers of the customer's designated premises when mileage is over zero.

The rates are listed in 7.5.5(E) following.

© 2022 Frontier Communications Parent, Inc. All rights reserved

7. Special Access Service (Cont'd)

7.2 Service Descriptions (Cont'd)

7.2.5 Video Service (Cont'd)

(G) 45 Mbps Digital Video Transport Service

(1) Service Description

45 Mbps Digital Video Transport Service (45 Mbps DVTS) is a broadband digital video transport channel with one-way transmission capability of 45 Mbps high quality video as defined by American National Standard Institute and Telcordia Technologies. 45 Mbps DVTS is provided with an electrical interface with an optional encoder/decoder (CODEC) at either or both ends of the circuit for full time service. The service may include up to six (6) 5Hz - 22kHz Audio Engineering Society (AES)/European Broadcasting Union (EBU) digital audio signals.

45 Mbps DVTS is provided on a full-time or part-time basis over digital network facilities between customer designated premises, or between a customer's designated premises and a video hub where compatible channels may be switched. At the customer's premises, the Company will install fiber optic and/or coaxial cable for the transmission facilities within the building up to the channel interface. The channel interface enables delivery of digital audio signals, which are embedded in the digital transmission. It is the responsibility of the customer to embed the audio and ancillary data in the digital transmission. The quality of the video signal may be impaired if the distance of the coaxial cable results in transmission parameters which are not within the limits specified in the technical publication set forth in (3) following.

Where suitable facilities are not available to provide 45 Mbps DVTS, Special Construction charges as set forth in Section 5.1.3 preceding may apply.

(2) Optional Features and Functions

At the customers option a video encoder and decoder, CODEC, may be provided at either or both ends of a 45 Mbps DVTS. A CODEC enables compression of the NTSC composite video signal into a 44.736 Mbps data stream or decompression of the 44.736 Mbps data stream into NTSC composite video and audio signals.

The CODEC option is only available on a full time basis and has a minimum billing period of one year.

45 Mbps Digital Video Transport is also compatible with the Advanced Switching Service feature as described in 7.2.5 (5) preceding.

© 2022 Frontier Communications Parent, Inc. All rights reserved

7. Special Access Service (Cont'd)

7.2 Service Descriptions (Cont'd)

7.2.5 Video Service (Cont'd)

(G) 45 Mbps Digital Video Transport Service (Cont'd)

(3) Technical Specifications

The technical specifications for 45 Mbps DVTS are delineated in Technical Publications:

- ANSI T1.102-1993 (R2005), Digital Hierarchy
- ANSI T1 102.01-1996 (R2001), Digital Hierarchy – VT1.5 Electrical Interface
- ANSI T1.107-2002 (R2006), Digital Hierarchy – Format Specifications
- SR4274, Issue 1, A View of Systems M-NSTC Video Jitter and Wander Specifications on Compressed Systems at 45 MBS
- GR338-CORE, Issue 1, Television Special Access and Local Channel Services – Transmission Parameter Limits and Interface Combinations

The Company will only accept a 75-ohm impedance interface to/from customer provided, high quality coaxial cable that meets Company transmission requirements.

(4) Channel Interfaces

The following channel interfaces (CI) are available with 45 Mbps DVTS.

O4TE6.20D
10TE6.20D
10TV6.20D

© 2022 Frontier Communications Parent, Inc. All rights reserved

7. Special Access Service (Cont'd)

7.2 Service Descriptions (Cont'd)

7.2.5 Video Service (Cont'd)

(G) 45 Mbps Digital Video Transport Service (Cont'd)

(5) Terms and Conditions

a) 45 Mbps DVTS is available on a month-to-month basis or as a 1, 3 or 5-year term plan. 45 Mbps is also available as a part time service on a daily basis.

b) The minimum service period for 45 Mbps DVTS is 3 months unless the optional CODEC service is purchased. When 45 Mbps DVTS includes the optional CODEC, the minimum service period is one (1) year.

The minimum service period liability is forgiven when a customer elects to switch to another video service with a minimum service period of the same or longer duration.

c) DVTS is available based on negotiated intervals as described in 5.2.1(B) preceding.

d) At the expiration of a term plan, the customer's 45 Mbps DVTS will automatically be renewed for the same term at the current prevailing rate or the customer may subscribe to a new plan. To terminate service without incurring new termination liabilities, the customer must disconnect service within 90 days of the expiration date.

e) Early termination of the term plan is subject to termination liability, except when the customer subscribes to any new video term plan of equal or greater value in revenue than the remainder of the present plan.

Termination liability is in addition to the minimum period charge and is calculated as shown in i) or ii) following. When calculating termination liability charges, the Company will apply the option that provides the customer with the lowest termination liability

i) Option I

Termination liability is 100% of the monthly rates for each month and fraction thereof remaining in the balance of the selected term plan/commitment period.

ii) Option 2

The termination liability charge is the difference between the monthly rate for the longest term plan that could have been satisfied prior to termination of the service and the monthly rate for the selected term plan multiplied by the actual number of months the plan has been in effect.

© 2022 Frontier Communications Parent, Inc. All rights reserved

7. Special Access Service (Cont'd)

7.2 Service Descriptions (Cont'd)

7.2.5 Video Service (Cont'd)

(G) 45 Mbps Digital Video Transport Service (Cont'd)

(6) Rate Regulations

The rates and charges for 45 Mbps DVTS include channel terminations, channel mileage and a CODEC charge when the customer chooses that option.

a) A Channel Termination charge applies for each termination of DVTS. Included in the Channel Termination rate element is the use of up to twenty-five (25) feet of coaxial cable from the point at which the video service enters the customer's building to the channel interface. In the event the customer requests that the Company extend the location of the channel interface beyond 25 feet, and the Company agrees to extend the communications path, the charges set forth for Other Labor as specified in Section 13.2.5 following will apply for the extended portion of the communications path. The extended communications path is subject to distance limitations, which are specific to the communications path being extended.

b) A Channel Mileage rate element applies on a fixed and per mile basis for the transmission facilities between the serving wire centers of the customer's designated premises when mileage is over zero.

c) A CODEC rate element applies monthly for each optional CODEC provided on a 45 Mbps DVTS circuit.

The rates for 45 Mbps DVTS are listed in 7.5.5(F) following.

© 2022 Frontier Communications Parent, Inc. All rights reserved

7. Special Access Service (Cont'd)

7.2 Service Descriptions (Cont'd)

7.2.5 Video Service (Cont'd)

(H) Supertrunking Transport Video Service

(1) Service Description

Supertrunking Transport Video Service (SVS) – a channel with a bandwidth of up to either 750 MHz or 870 MHz for the transmission of multiple Amplitude Modulation (AM) standard 525 line/60 field monochrome or National Television Systems Committee (NTSC) color video signals and monaural or Broadcast Television Systems Committee (BTSC) stereo audio signals over fiber optic facilities.

The signal performance and quality of the video channel may be degraded by the number of signals and the end to end distance of the channel. The Telephone Company will work cooperatively with the customer to determine the number of video signals which can be provided over a single SVS channel.

For two-point service configurations, a single channel termination at each customer designated premises transmits or receives all of the video signals transported over the SVS channel. For multipoint service configurations, each video signal is provided over a Transmit only channel termination at one of the designated premises involved and a Receive only channel termination at each of the other designated premises involved. A Transmit channel termination provides an electrical to optical conversion of the customer's video signals allowing the customer to transmit, or originate, AM signals for transport over the SVS channel to one or more Receive channel terminations. A Receive channel termination provides an optical to electrical conversion allowing the customer to receive the multiple amplitude modulation signals.

(2) Technical Specifications

The Technical specifications are delineated in Technical References SR-INS-001532, Issue 1; SR-NPL-001434, Issue 1; and SR-NWT-001851, Issue 1.

(3) Channel Interfaces

The following Channel Interface (CI) is available with the 750 Mhz or 870 MHz transport for point to point and point to multipoint configuration of SVS.

04WVF.L

© 2022 Frontier Communications Parent, Inc. All rights reserved

7. Special Access Service (Cont'd)

7.2 Service Descriptions (Cont'd)

7.2.5 Video Service (Cont'd)

(H) Supertrunking Transport Video Service (Cont'd)

(4) Rate Regulations

At the option of the customer, SVS channels may be provided under a Service Discount Plan (SDP) as specified in 25.2.1 following.

The minimum period for SVS is one year.

A channel termination rate applies for each termination of SVS on a Transmit only or Receive only basis. The Channel Mileage rate element applies on a fixed and per mile basis for the transmission of facilities between the serving wire center of the premises involved and is subject to the mileage bands specified in 7.5.5(G) following.

The customer may upgrade from 750 to 870Mhz without incurring termination liability on the 750Mhz term contract, provided the upgrade term is of equal or greater length than the remainder of the existing 750Mhz term contract. The customer will be required to pay the new rates associated with the 870Mhz service.

(5) Service Interruption Credit

Service Interruption Credit will apply as set forth in Section 2.7.1(A) preceding.

(6) Cancellation Charges

Cancellation charges apply as set forth in Section 5.2.3 preceding.

© 2022 Frontier Communications Parent, Inc. All rights reserved

7. Special Access Service (Cont'd)

7.2 Service Descriptions (Cont'd)

7.2.6 Wideband Analog Service

(A) Basic Channel Description

A Wideband Analog channel is a channel with a bandwidth measured in kHz for the transmission of a wideband signal. The actual bandwidth is a function of the channel interface selected by the customer. Wideband Analog channels are provided between customer designated premises or between a customer designated premises and a Telephone Company Hub.

(B) Technical Specifications Packages

	Package WA-				
Parameter	1	2	2A	3	4
Amplitude Stability				X	X
Background Noise	X	X	X	X	X
Frequency Shift			X	X	X
Gain/Frequency Characteristics of:					
- Group Connections	X			X	X
- Supergroup Connections					X
- Mastergroup Connections					X
Impulse Noise			X	X	X
Net Loss Variations	X	X	X	X	X
Pilot Slot			X	X	X
Spurious Single Frequency Tone			X	X	X

The technical specifications are delineated in Technical Reference TR-NPL-000339.

© 2022 Frontier Communications Parent, Inc. All rights reserved

7. Special Access Service (Cont'd)

7.2 Service Descriptions (Cont'd)

7.2.6 Wideband Analog Service (Cont'd)

(C) Channel Interfaces

The following channel interfaces (CIs) define the bandwidths that are available for a Wideband Analog channel:

CI	Bandwidth
AH-B	60 kHz to 108 kHz (Group)
AH-C	312 kHz to 552 kHz (Supergroup)
AH-D	564 kHz to 3084 kHz (Mastergroup)
WD-1	300 Hz to 18 kHz
WD-2	28 kHz to 44 kHz
WD-3	29 kHz to 44 kHz

Compatible channel interfaces are set forth in 7.3.5(G) following.

Optional Features and Functions

(1) Central Office Multiplexing

(a) Mastergroup to Supergroup

An arrangement that converts a Mastergroup channel to ten Supergroup channels using frequency division multiplexing.

(b) Supergroup to Group

An arrangement that converts a Supergroup channel to five Group channels using frequency division multiplexing.

(c) Group to Voice

An arrangement that converts a Group channel to twelve Voice Grade channels using frequency division multiplexing. A Channel(s) of this Group level service to the HUB can also be used for Program Audio or Metallic services.

© 2022 Frontier Communications Parent, Inc. All rights reserved

7. Special Access Service (Cont'd)

7.2 Service Descriptions (Cont'd)

7.2.6 Wideband Analog Service (Cont'd)

Optional Features and Functions (Cont'd)

(1) Central Office Multiplexing (Cont'd)

Group to DS1

An arrangement that converts two Group channels to a DS1 channel using analog to digital conversion.

The following table shows the technical specifications packages with which the optional features and functions are available.

	Available with Technical Specifications Package WA-				
	1	2	2A	3	4
Central Office Multiplexing:					
Mastergroup to Supergroup					X
Supergroup to Group					X
Group to Voice					X
Group to DS1*					

* Requires two channels with technical specifications package WA1 to form a WA1T service.

© 2022 Frontier Communications Parent, Inc. All rights reserved

7. Special Access Service (Cont'd)

7.2 Service Descriptions (Cont'd)

7.2.7 Wideband Data Service

(A) Basic Channel Description

A Wideband Data channel is an analog channel for the transmission of synchronous serial data at the rate of 19.2, 50.0, or 230.4 kbps or of asynchronous serial data at rates of up to 19.2, 50.0, or 230.4 kbps. Optional arrangements are available for transmission of synchronous serial data at 18.75 or 40.8 kbps. The actual bit rate is a function of the channel interface selected by the customer. This service requires a 303 Data Station(s). The 303 Data Station provides coupling between the customer's business machine and the wideband data transmission medium and is required only at the End User (non-carrier) premises. A definition of an End User is contained in 2.6 preceding. A voiceband coordinating channel is also provided. Wideband Data channels are provided between customer designated premises.

(B) Technical Specifications Packages

Parameter	Package WD-1	Package WD-2	Package WD-3
Error-Free Seconds	X	X	X

While in service, the monthly average of error-free seconds will be equal to or greater than 98.75%. The technical specifications are delineated in Technical Reference TR-NPL-000340.

(C) Channel Interfaces

The following channel interfaces (CIs) define the bit rates that are available for a Wideband Data channel:

CI	Bit Rate
WB-18S	18.75 kbps, synchronous
WB-19A	up to 19.2 kbps, asynchronous
WB-19S	19.2 kbps, synchronous
WB-23A	up to 230.4 kbps, asynchronous
WB-23S	230.4 kbps, synchronous
WB-40S	40.8 kbps, synchronous
WB-50A	up to 50.0 kbps, asynchronous
WB-50S	50.0 kbps, synchronous

Compatible channel interfaces are set forth in 7.3.5(H) following.

© 2022 Frontier Communications Parent, Inc. All rights reserved

7. Special Access Service (Cont'd)

7.2 Service Descriptions (Cont'd)

7.2.7 Wideband Data Service (Cont'd)

Optional Features and Functions

(1) Key Activated Transfer Arrangement

An arrangement that affords the customer an additional measure of flexibility in the use of their access channel(s). The arrangement can be utilized to transfer a leg of a Special Access Service to either a spare or working channel that terminates in either the same or a different customer premises. A key activated control service is required to operate the transfer arrangement. A spare channel, if required, is not included as a part of the option.

The following table shows the technical specifications packages with which the optional features and functions are available.

	Available with Technical Specifications Package WD-		
	1	2	3
Key Activated Transfer Arrangement	X	X	X

© 2022 Frontier Communications Parent, Inc. All rights reserved

7. Special Access Service (Cont'd)

7.2 Service Descriptions (Cont'd)

7.2.8 Digital Data Service

(A) Basic Channel Description

A Digital Data channel is a channel for duplex transmission of synchronous serial data at the rate of 2.4, 4.8, 9.6, 19.2, 56 or 64 kbps. The actual bit rate is a function of the channel interface selected by the customer. The channel provides a synchronous service with timing provided by the Telephone Company through the Telephone Company's facilities to the customer in the received bit stream. Digital Data channels are only available via Telephone Company designated hubs and are provided between customer designated premises between a customer designated premises and a Telephone Company Hub, or between a customer designated premises and a wire center where connection to an advanced data service# occurs. Subrating is not available at the 19.2 kbps speed and the 64 kbps speed requires B8ZS Line Code Formatted Signal.

(B) Technical Specifications Packages

	Package DA-					
Parameter	1	2	3	4	5	6
Error-Free Seconds	X	X	X	X	X	X

The Telephone Company will provide a channel capable of meeting a monthly average performance equal to or greater than 99.875% error-free seconds while the channel is in service, if it is measured through a CSU equivalent which is designed, manufactured and maintained to conform with the specifications contained in Technical Reference PUB 62310.

Voltages which are compatible with Digital Data Service are delineated in Technical Reference TR-NWT-000341, Issue 2.

Channel Interface requirements necessary for Secondary Channel Capability are contained in Technical Reference TR-NPL-000157, Issue 1.

Advanced data services include frame relay services, switched multi-megabit services, internet protocol services and ATM-cell relay services.

© 2022 Frontier Communications Parent, Inc. All rights reserved

7. Special Access Service (Cont'd)

7.2 Service Descriptions (Cont'd)

7.2.8 Digital Data Service (Cont'd)

(C) Channel Interfaces

The following channel interfaces (CIs) define the bit rates that are available for a Digital Data channel:

CI	Bit Rate
DU-24	2.4 kbps
DU-48	4.8 kbps
DU-96	9.6 kbps
DU-19	19.2 kbps
DU-56	56.0 kbps
DU-64	64.0 kbps

Compatible channel interfaces are set forth in 7.3.5(I) following.

Optional Features and Functions

(1) Central Office Bridging Capability

(2) Transfer Arrangement

An arrangement that affords the customer an additional measure of protection and/or flexibility in the use of their access channel(s) on a 1xN basis. The arrangement can be utilized to transfer a leg of a Special Access Service to either a spare or working channel that terminates in either the same or a different customer premises. This arrangement is only available at a Telephone Company designated hub. A key activated or dial up control service is required to operate the transfer arrangement. A spare channel, if required, is not included as a part of the option.

(3) Secondary Channel

Secondary Channel (SC) is an optional arrangement which provides a derived lower speed Digital Data companion channel which is independent of the primary Digital Data Service channel. SC allows customers to perform Network Management, diagnostic and maintenance applications on their Digital Data Networks.

© 2022 Frontier Communications Parent, Inc. All rights reserved

7. Special Access Service (Cont'd)

7.2 Service Descriptions (Cont'd)

7.2.8 Digital Data Service (Cont'd)

Optional Features and Functions (Cont'd)

(3) Secondary Channel (Cont'd)

Secondary Channel is provided only at the 2.4, 4.8, 9.6 and 56 kbps DDS speeds and is available as a point-to-point or multipoint service except for multipoint service at 56 Kbps. Due to transmission equipment restrictions, SC cannot be provided on 56 Kbps circuits that require the installation of Loop Repeater equipment.

The Secondary Channel option is only available on new orders for service. The addition of SC to an existing Digital Data Service will be treated as a disconnect of the existing service and a new connect for the service with SC.

The Technical specifications for this feature are as described in Technical Reference TR-NPL-000157, Issue 1. The bit rates of the SC are as shown in the following table:

Digital Data Channel Transmission Speed	Secondary Channel Transmission Speed
2.4 Kbps	133 bps
4.8 Kbps	266 bps
9.6 Kbps	533 bps
56.0 Kbps	2.666 Kbps

The following table shows the technical specifications packages with which the optional features and functions are available.

	Available with Technical Specifications Package DA-			
	1	2	3	4
Central Office Bridging Capability	X	X	X	X
Transfer Arrangement	X	X	X	X
Secondary Channel	X	X	X	X

© 2022 Frontier Communications Parent, Inc. All rights reserved

7. Special Access Service (Cont'd)

7.2 Service Descriptions (Cont'd)

7.2.8.1 Bonded Digital Link Service

(A) Service Description

Bonded Digital Link Service provides connecting channels for the transmission of voice or data between an end user's local exchange service terminating at a digital cross connect facility and special access service provided by the Telephone Company within the same wire center or at another wire center within the same LATA.

Bonded Digital Link Service is comprised of Intra-office channels (channels within a single wire center) or Inter-office channels (channels between two wire centers) connecting the wire centers of the locations involved. The minimum transmission rate for the service is 64 kbps in a DSO channel. The Telephone Company will provide for the transmission of DS0 channels within a DS1 signal of the customer's (the end user) associated local exchange service from the digital cross connect facility in the customer's serving wire center to a 64 kbps channel of a customer's DS1 to Digital central office multiplexing arrangement within the same wire center or in a different wire center. The total number of DS0s on a Bonded Digital Link Service channel may not exceed the total capacity of the DS1 or equivalent service to which it is connected.

At the customer's option, the Telephone Company will bond contiguous DS0 channels in order to provide higher data rates. The following data rates are available:

- 64 kbps; 1 DS0 equivalent channel
- 256 kbps: 4 bonded equivalent DS0s
- 384kbps; 6 bonded equivalent DS0s
- 512 kbps; 8 bonded equivalent DS0s
- 768 kbps; 12 bonded equivalent DS0s

For the transmission of the Bonded Digital Link channels, the Telephone Company assumes responsibility for the routing of the customer's DS0 and bonded DS0 circuits over the Telephone Company's interoffice network in order to maximize network efficiencies and to optimize economic efficiencies.

© 2022 Frontier Communications Parent, Inc. All rights reserved

7. Special Access Service (Cont'd)

7.2 Service Descriptions (Cont'd)

7.2.8.1 Bonded Digital Link Service (Cont'd)

(B) Terms and Conditions

(1) Bonded Digital Link Service is available within or between wire centers where suitable digital cross-connect technology exists to perform DS1 to DS0 multiplexing functions. Those locations (wire centers) are set forth in NATIONAL EXCHANGE CARRIER ASSOCIATION, INC. TARIFF F.C.C. NO. 4.

(2) The service may only be used for connection from a wire center with a digital hubbing arrangement to a DS1 special access service capable of assignment to compatible DS0 channels. The customer or its authorized representatives must designate the DS0 channels on the special access service connected to this service. Data rates above 64 kbps require contiguous DS0 channel assignments. Connection to services other than special access service is prohibited.

(3) Bonded Digital Link Service is provided with a one-year minimum service period. If service is disconnected prior to satisfying the minimum service period (i.e., within the first twelve months), minimum period charges apply. The minimum one-year period and minimum period charges do not apply if the rates have increased during the one-year period. The minimum period charge is equal to 100 % of the monthly rate from the date of disconnection through the balance of the first twelve months of service.

(4) This service is used for connectivity within or between wire centers. The rates and charges for Bonded Digital Link Service apply as a flat rate per DS0 equivalent channel.

(5) Credit for an interruption of Bonded Digital Link Service is subject to the basic credit allowance set forth for Special Access services as set forth in Section 2.7.1(A) preceding.

(6) Bonded Digital Link Service is provided with a negotiated interval as set forth in Section 5.2.1(B) preceding.

(7) The rates and charges for Bonded Digital Link Service apply per DS0 equivalent channel (64 kbps). The customer is assessed either an Intra-office or an Inter-office Channel Charge for each DS0. Rates and charges are set forth in 7.5.8.1 following.

© 2024 Frontier Communications Parent, Inc. All rights reserved

7. Special Access Service (Cont'd)

7.2 Service Descriptions (Cont'd)

7.2.9 High Capacity Service

(A) Basic Channel Description

A High Capacity channel is a channel for the digital transmission of 1.544, 3.152, or 44.736 Mbps isochronous serial data. The actual bit rate and framing format is a function of the channel interface selected by the customer. High Capacity channels are provided between customer designated premises, between a customer designated premises and a Telephone Company Hub, between a customer designated premises and a wire center where connection to an advanced data service# occurs, or Hub-to-Hub for Reconfigure Service at 1.544 and 44.736 Mbps transmission. High Capacity channels may also be connected to an in-service Telephone Company provided integrated optical service, provided that such connections are technically and operationally feasible, as determined by the Telephone Company.

(1) DS1 High Capacity/1.544 Mbps Service

DS1 service (a 1.544 Mbps facility) is provided with an electrical interface.

A nominal 64.0 kbps service is available only as a channel of a 1.544 Mbps facility between two Telephone Company Digital Data Hubs or as a cross connect of two 2.4, 4.8, 9.6, 19.2, 56.0, or 64.0 kbps channels of two DS1 services at a Digital Data Hub(s). The customer must provide system and channel assignment data.

(2) DS3 High Capacity/44.736 Mbps Services

DS3 service is available in standard channel termination configurations and is provided with an electrical interface. As an option, DS3/44.736 service may be ordered with an optical interface (i.e. mid-span meet).

Beginning August 7, 1998, the Company will no longer offer DS3C/44.736(X3) with an optical interface in response to new requests. All new requests for DS3 optical interfaces will be provisioned over SONET transmission devices. The new optical option is DS3 SONET Optical Interface (SOI). Those DS3 services provisioned prior to August 7, 1998, with Company provided Optical Line Terminating Equipment (OLTE) located in the Serving Wire Center, will continue to be provided and maintained.

Advanced data services include frame relay services, switched multi-megabit services, internet protocol services and ATM-cell relay services.

© 2022 Frontier Communications Parent, Inc. All rights reserved

7. Special Access Service (Cont'd)

7.2 Service Descriptions (Cont'd)

7.2.9 High Capacity Service (Cont'd)

(A) Basic Channel Description (Cont'd)

(2) DS3 High Capacity/44.736, 44.736 (X3), & 44.736 (X12) Mbps Services (Cont'd)

All DS3 services ordered with an optical interface option are provisioned with protection at the Serving Wire Center. Prior to August 7, 1998, DS3 services with this interface option will terminate in telephone company provided Optical Line Terminating Equipment (OLTE) located in the telephone company's serving wire center. Beginning August 7, 1998, DS3 SONET Optical Interface (SOI) will be provisioned over SONET transmission devices. The SONET transmission device will operate in a terminal/linear mode with fiber diversely routed (where available) between the Serving Wire Center and the customer's premises. The Data Communications Channel in the SONET transmission device will be disabled.

The OLTE located at the customer's premises and the DS3 SOI are subject to the mutual agreement of the parties and the associated protection and transmission capabilities must be compatible with the OLTE and the DS3 SOI specified in the telephone company's central office. All optical interfaces are only available where facilities permit and may be provisioned over multiple systems and any combinations of facilities and transmission speeds.

DS3 and optical interface channels can be connected at the wire center serving that premises to individual terminating DS3 channels, individual DS3 channels for multiplexing at designated Hubs, or to other DS3 services for multi-DS3 premises-to-premises connections. DS3 Channel Mileage is provided on an individual DS3 channel basis. The DS3 to DS1 multiplexing function is only available in Telephone Company Hubs as indicated in the Exchange Carrier Association Tariff F.C.C. No. 4.

© 2022 Frontier Communications Parent, Inc. All rights reserved

7. Special Access Service (Cont'd)

7.2 Service Descriptions (Cont'd)

7.2.9 High Capacity Service (Cont'd)

(B) Technical Specifications Packages

Parameter	Package HC-0	Package HC-1	Package HC-1C	Package HC-3
Error-Free Seconds				X

(C) Channel Interfaces

Compatible channel interfaces are set forth in 7.3.5(J) following. The following channel interfaces (CIs) define the bit rates that are available for a High Capacity channel:

CI	Bit Rate
DS-15	1.544 Mbps (DS1)
DS-31	3.152 Mbps (DS1C)
DS-44	44.736 Mbps (DS3)
FC-45	44.736 Mbps - Optical
FC-13	135 Mbps - Optical
FC-56	560 Mbps - Optical

Optional Features and Functions

(1) Automatic Loop Transfer

The Automatic Loop Transfer provides protection on a 1xN basis against failure of the facilities between a customer designated premises and the wire center serving that premises. Protection is furnished through the use of a switching arrangement that automatically switches to a spare channel when a working channel fails. The spare channel is not included as a part of the option. This option requires compatible equipment at both the serving wire center and the customer premises. The customer is responsible for providing the equipment at its premises. Equipment at the customer premises will be provided under tariff only if it existed in the Telephone Company inventory as of November 18, 1983. This feature is not available with channels utilizing the clear channel capability (B8ZS) Line Code.

© 2022 Frontier Communications Parent, Inc. All rights reserved

7. Special Access Service (Cont'd)

7.2 Service Descriptions (Cont'd)

7.2.9 High Capacity Service (Cont'd)

Optional Features and Functions (Cont'd)

(2) Transfer Arrangement

An arrangement that affords the customer an additional measure of flexibility in the use of their access channel(s). The arrangement can be utilized to transfer a leg of a Special Access Service to either a spare or working channel that terminates in either the same or a different customer premises. A key activated or dial up control service is required to operate the transfer arrangement. A spare channel, if required, is not included as part of the option.

(3) Central Office Multiplexing

(a) DS3 to DS1

An arrangement that converts a 44.736 Mbps channel to 28 DS1 channels using digital time division multiplexing.

(b) DS1C to DS1

An arrangement that converts a 3.152 Mbps channel to two DS1 channels using digital time division multiplexing.

(c) DS1 to Voice

An arrangement that converts a 1.544 Mbps channel to 24 channels for use with Voice Grade Services. A channel(s) of this DS1 to the Hub can also be used for WATS Access Line, Program Audio or Metallic Services.

DS1 to Digital

An arrangement that converts a 1.544 Mbps channel to 24 channels for use with individual digital data circuits to the Hub at speeds of 2.4, 4.8, 9.6, 19.2, 56, or 64 Kbps. A channel(s) of this DS1 to the Hub can also be used for WATS Access Line, Voice Grade, Program Audio, or Metallic Services.

(e) DS1 to DS0

An arrangement that converts a 1.544 Mbps channel to 23 56 kbps channels utilizing digital time division multiplexing. Where an existing arrangement is modified for use with DS0 to Subrate equipped with Secondary Channel, a conversion charge shall apply.

© 2022 Frontier Communications Parent, Inc. All rights reserved

7. Special Access Service (Cont'd)

7.2 Service Descriptions (Cont'd)

7.2.9 High Capacity Service (Cont'd)

Optional Features and Functions (Cont'd)

(3) Central Office Multiplexing (Cont'd)

(f) DS0 to Subrate

An arrangement that converts a 56 kbps channel to subspeeds of up to twenty 2.4 kbps, ten 4.8 kbps, or five 9.6 kbps channels using digital time division multiplexing. This arrangement is only available in conjunction with item (e) above.

The Secondary Channel (SC) option as described in Section 7.2.8 (3) preceding is only available on new orders for service. The addition of SC to an existing DS0 to Subrate arrangement will be treated as a disconnect and new connection.

(4) Clear Channel Capability (CCC)

(a) CCC is an arrangement that allows a customer to transport 1.536 Mbps information rate signals over a 1.544 Mbps High Capacity channel or a 1.544 Mbps High Capacity channel subtending from a multiplexed 44.736 Mbps High Capacity channel with no constraint on the quantity or sequence of ones (mark) and zero (space) bits. This arrangement requires the customer signal at the channel interface to conform to Bipolar with Eight Zero Substitution (B8ZS) line code as described in Technical References GR-54-CORE, Issue 1, and GR-342-CORE, Issue 1.

(b) CCC is provided on 1.544 Mbps High Capacity channels between two customer designated premises and on multiplexed 44.736 High Capacity channels or multiplexed 1.544 High Capacity channels* between a telephone company Hub office and a customer designated premises, and is subject to the availability of facilities.

(c) The optional feature may be ordered at the same time the High Capacity service is ordered or it may be ordered as an addition to an existing High Capacity service. Customers must agree to out-of-service periods required to add this feature to an existing High Capacity service.

* Available only in a DS1-to-Digital Multiplexed Configuration.

© 2022 Frontier Communications Parent, Inc. All rights reserved

7. Special Access Service (Cont'd)

7.2 Service Descriptions (Cont'd)

7.2.9 High Capacity Service (Cont'd)

Optional Features and Functions (Cont'd)

(5) Extended Superframe Format

Extended Superframe Format is an optional feature that passes a customer provided framing format for 1.544 Mbps High Capacity service. Extended Superframe Format extends the customer's 1.544 Mbps framing structure from 12 to 24 frames and divides the 8 Kbps 193rd bit position pattern into three distinct functionalities: 2 kbps for frame synchronization, 2 kbps for cyclic redundancy checking, and 4 kbps used for performance monitoring information.

The following table shows the technical specifications packages with which the optional features and functions are available.

	Available with Technical Specifications Package HC-			
	0	1	1C	3
Automatic Loop Transfer				X
Central Office Multiplexing:				
DS3 to DS1				X
DS1C to DS1				X
DS1 to Voice				X
DS1 to Digital				X
DS1 to DS0				X
DS0 to Subrate*				X
Transfer Arrangement				X
Clear Channel Capability		X		X
Extended Super Frame Format				X

* Available only on a channel of a 1.544 Mbps facility to a Telephone Company Hub.

© 2022 Frontier Communications Parent, Inc. All rights reserved

7. Special Access Service (Cont'd)

7.2 Service Descriptions (Cont'd)

7.2.9 High Capacity Service (Cont'd)

Optional Features and Functions (Cont'd)

(6) Shared Network Arrangement

(a) A Shared Network Arrangement is a service offering that enables a customer (the "Service User") to connect subtending services to the multiplexed High Capacity service or Reconfigure Service of another customer (the "Host Subscriber"), with the Telephone Company maintaining separate records and billing for each. Each customer will be billed for those rate elements associated with his own portion of the service configuration. Under no circumstances will the rates or charges for individual rate elements be split. This offering is limited to service configurations where a Service User obtains either subtending Voice Grade or Digital Data Service circuits from a Host's multiplexed DS1 service, or DS1 circuits from a Host's multiplexed DS3 service.

(b) Under the Shared Network Arrangement, the Telephone Company may share with the host subscriber record information pertaining to the services of other users of the shared network. Such disclosure will be under the sole discretion of the Telephone Company as is necessary to perform billing reconciliations and/or other functions required in connection with maintaining account records.

(c) Section 7.4.14 contains rate regulations specific to Shared Network Arrangements.

(7) Alternate Serving Wire Center

(a) Alternate Serving Wire Center (ASWC) is an optional feature which provides a transmission path for a High Capacity Service between the customer's designated premises and a serving wire center separate from the normal serving wire center.

(b) The Telephone Company will designate the serving wire center to be used as the alternate. The ASWC feature is available where contiguous wire centers with adjacent fiber feeder routes exist. Where facilities are not available, Special Construction rates and regulations may apply as set forth in the appropriate Special Construction tariff. Where service is available, provisioning is based on a Negotiated Interval as described in 5.2.1(B) preceding.

© 2022 Frontier Communications Parent, Inc. All rights reserved

7. Special Access Service (Cont'd)

7.2 Service Descriptions (Cont'd)

7.2.9 High Capacity Service (Cont'd)

Optional Features and Functions (Cont'd)

(7) Alternate Serving Wire Center (Cont'd)

(c) The monthly rate for Alternate Serving Wire Center, as specified in 7.5.9(C)(5) following, applies per point of termination, including per DSEF DS1 with Separated VT1.5s, and is in addition to the Channel Terminations, DSEF Terminations and Interfaces, and Channel Mileage Rates and Charges for each High Capacity or DSEF service provided over the alternate path. Channel mileage for the alternately routed service is based on mileage measured from or to the alternate serving wire center.

Example: Rate application for a High Capacity service connecting two customer premises via ASWC.

Rate Elements

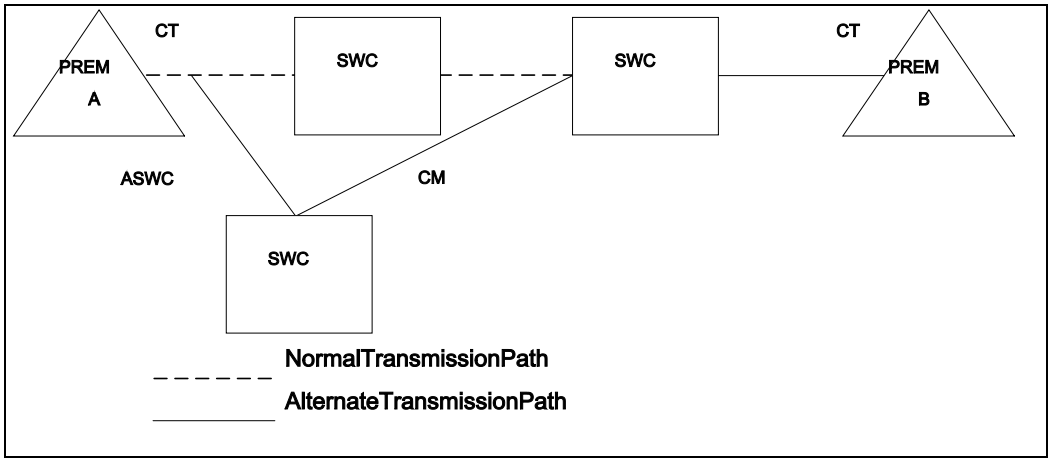

Applicable Charges

2 Channel Terms (CT)	Monthly and nonrecurring
Channel Mileage (CM)	Monthly
1 ASWC	Monthly

© 2022 Frontier Communications Parent, Inc. All rights reserved

7. Special Access Service (Cont'd)

7.2 Service Descriptions (Cont'd)

7.2.10 Lightwave Facilities

***Note: In accordance with Special Permission Number 94-659 and the decision of the U.S. Court of Appeals for the D.C. Circuit in Southwestern Bell Telephone Co., et al. v. FCC, Case No. 91-1416, decided April 5, 1994, beginning on June 8,1994,the Telephone Company will only provide those Lightwave Facilities which are in service as of such date, and such arrangements will be continued pending the outcome for the remand proceeding resulting from such Court of Appeals decision. Also beginning on such date, the Telephone Company will not provide any new Lightwave Facilities nor will it provide any changes, additions, moves or rearrangements of existing Lightwave Facilities. The Telephone Company will provide service for all ASRs received prior to the effective date of this Guide (i.e., June 8, 1994)**

(A) Basic Description

Lightwave Facilities shall be installed using single mode fiber optic facilities suitable for provisioning point- to-point communications, transmitting at customer specified bandwidths between customer premises. Lightwave Facilities are not available for termination in telephone company hub offices. These fiber optic facilities are available only where conduit exists. Any requirement to construct new conduit will be governed by the regulations, rates and charges for special construction as set forth in the tariffs as defined in Section 1, preceding. These special construction rates and charges will be in addition to the regulations, rates and charges specified in this section.

(B) Technical Specifications

The type of facility and the route of the facility will be determined by the Telephone Company. The Telephone Company makes no guarantee or warranty of the suitability of the lightwave facilities for the purposes intended by the customer.

Lightwave Facilities are only offered in capacities of four (4) strands of optic cable or twelve (12) strands of optic cable terminating on a standard optical patch panel. Since the customer provides the electronics on each end of the facility, and there are no telephone company amplifiers or repeaters on the facilities, the Telephone Company cannot test and monitor the facilities. Consequently, the Telephone Company makes no representations or guarantees regarding suitable operating performance of the facility. Lightwave facilities are not recommended for interoffice distances in excess of 20 miles.

(C) Facility Interface

The following channel interface is the only one available for lightwave facilities: 01FCF.X

© 2022 Frontier Communications Parent, Inc. All rights reserved

7. Special Access Service (Cont'd)

7.2 Service Descriptions (Cont'd)

7.2.11 LAN Extension Service#

(A) General

LAN (Local Area Network) Extension Service (LES) provides fiber transport connectivity between:

(1) two customer designated premises (one of which must be a service provider's point of presence with the other being one of the service provider's end user); or
(2) a customer designated premises and a customer's equipment in a Telephone Company Collocated Interconnection Service (CIS) arrangement, as set forth in Section 19 following; or
(3) a customer designated premises (must be a service provider's point of presence) and a wire center where connection to a Telephone Company-provided Ethernet LAN Service (ELS) Network-to-Network Interface (NNI) Port Only Connection occurs; or
(4) a customer's equipment in a CIS arrangement and another wire center (i.e., other than the wire center where the CIS arrangement is provided) where connection to a Telephone Company-provided ELS NNI Port Only Connection occurs.

LES may also be connected to Telephone Company provided switched Ethernet service, where such connections are technically and operationally feasible, as determined by the Telephone Company.

Effective May 31, 2007, orders for new LES are no longer permitted. The Telephone Company will continue to provide LES pursuant to this Section 7.2.11 on any existing LES that is in-service as of May 31, 2007, or any order for LES that is placed with the Telephone Company prior to May 31, 2007 (collectively, Existing LES), subject to the following conditions:

a. For any Existing LES that is currently subscribed to a term plan (i.e., commitment periods of 3- and 5-years), the Telephone Company will continue to provide Existing LES for an additional six (6) months beyond the expiration date of the customer's current commitment period, or until the customer replaces the Existing LES with a comparable Telephone Company provided service, or discontinues service, whichever comes first. Moves, additions, and/or changes are not permitted.

b. For any Existing LES whose term plan expired prior to May 31, 2007, but the Existing LES continued on a month-to-month basis at prevailing rates, the Telephone Company will continue to provide Existing LES purchased on a month-to-month basis until November 30, 2007, or until the customer replaces the Existing LES with a comparable Telephone Company provided service, or discontinues service, whichever comes first. Moves, additions, and/or changes are not permitted.

© 2022 Frontier Communications Parent, Inc. All rights reserved

7. Special Access Service (Cont'd)

7.2 Service Descriptions (Cont'd)

7.2.11 LAN Extension Service# (Cont'd)

(B) Service Description

LES is a point-to-point service, offered with a 10Mbps, 16Mbps Token Ring*, 100Mbps, 1Gbps Ethernet or 1Gbps Extended Distance interface connection, available where facilities and conditions permit. Where suitable facilities and conditions are not available to provide LES, facilities may be specially constructed subject to the provisions set forth in Sections 2.1.4, Provision of Services, and 5.1.3, Special Construction, preceding.

LES is provisioned over two dedicated fiber strands between the two locations involved where service is delivered over the network interface specified by the customer. The LES network interface converts the optical signal to an electrical Ethernet signal at speeds of 10 Mbps, 16 Mbps Token Ring* or 100 Mbps. The 1 Gbps network interface enables LES to be delivered as an optical signal.

When LES is delivered to a CIS arrangement, service will be cross-connected to the physical or virtual CIS arrangement as described in Section 19, following. The provision of LES at 100Mbps, 1Gbps or 1Gbps Extended Distance may include the use of dense wave division multiplexing technology, where available.

When LES connects to an ELS NNI Port Only Connection or Telephone Company provided switched Ethernet service network-to-network interface port only connection, it is offered only with a 1 Gbps Ethernet or 1 Gbps Extended Distance interface. Regulations, rates and charges for ELS NNI Port Only Connection are set forth in Frontier Telephone Companies Tariff F.C.C. No. 8.

The Company's equipment at the customer-designated premises must be on conditioned power circuits (surge protected); the Company recommends an uninterrupted power supply (UPS).

No credit allowance for a service interruption is provided with LES.

Service intervals for LES are specified in Section 5.2.1 preceding.

* Service is limited to existing customers of record as of February 11, 2003. Customers who are already subscribing to LES with a 16Mbps Token Ring interface as of February 11, 2003, may continue with the service, add additional circuits or move service as needed.

Service availability limited. Refer to # footnote on Page 7-70.

© 2022 Frontier Communications Parent, Inc. All rights reserved

7. Special Access Service (Cont'd)

7.2 Service Descriptions (Cont'd)

7.2.11 LAN Extension Service# (Cont'd)

(C) Technical Specifications

LES requires the use of single mode, fiber optic facilities that meet the following specifications:

1310nm with a loss of 20dB or less for 10Mbps Ethernet
1310nm with a loss of 26dB or less for 100Mbps Ethernet
1310nm with a loss of 18dB or less for 1Gbps Ethernet
1550nm with a loss of 26dB or less for 1Gbps Ethernet (extended distance)

The dB loss is measured to include the special transport facility when applicable and any local and intra-building fibers used in the provision of LES.

Responsibilities and Rights of the Telephone Company

- The Telephone Company will provide the necessary fiber converter at the customer's designated premises to meet the interface requirements specified on the order for service.

- The Telephone Company is responsible for service up to and including the network interface. The Telephone Company's responsibility is limited to the furnishing of communications facilities suitable for LES.

- LES will not be available during those times when the Telephone Company must perform software updates and other maintenance. The Telephone Company will provide customers reasonable and timely notification to minimize impacts to the customer's service. The Telephone Company reserves the right to temporarily interrupt LES at other times in emergency situations.

- All other general regulations pertaining to the responsibilities and rights of the Telephone Company as specified in Section 2, preceding also apply.

Service availability limited. Refer to # footnote on Page 7-70.

© 2022 Frontier Communications Parent, Inc. All rights reserved

7. Special Access Service (Cont'd)

7.2 Service Descriptions (Cont'd)

7.2.11 LAN Extension Service# (Cont'd)

(E) Responsibilities of the Customer

- The customer is responsible for all wiring and connections of its local area network to the customer side of the network interface or fiber distributing frame, as applicable.
- The LES customer is responsible for the installation, operation and maintenance of any customer provided equipment.
- The customer must provide a protected path for all network fibers on private property, sufficient AC or DC power to network interface equipment, access to all sites as needed by the Telephone Company personnel to perform services, and a secure environment for the network equipment.
- The customer must provide a relay rack or wall space for mounting of the network interface device.
- The customer must provide connecting facility assignment (CFA) to which LES will be cross-connected in a CIS arrangement.
- The customer is responsible for any damage to the Company's network equipment resulting from problems with power provided by the customer at its locations. With the exception of connecting customer provided equipment to the network interface device, the customer may not attempt to modify, adjust or otherwise change Company owned facilities or network equipment used in the provision of service. The Telephone Company reserves the right to discontinue the provision of LES to a customer who tampers with Telephone Company owned equipment and/or facilities.
- The Telephone Company does not monitor the LES circuit. The customer may perform its own monitoring using surveillance equipment within its own network.

Service availability limited. Refer to # footnote on Page 7-70.

© 2022 Frontier Communications Parent, Inc. All rights reserved

7. Special Access Service (Cont'd)

7.2 Service Descriptions (Cont'd)

7.2.11 LAN Extension Service# (Cont'd)

(F) Rate Regulations

(1) The rates and charges for LES apply as channel terminations and channel mileage. The LES channel termination provides the transmission path to connect a customer designated premises to the associated serving wire center. Included as part of the LES channel termination is a converter interface arrangement which defines the technical characteristics and transmission rate of the service. LES channel terminations apply as a monthly recurring rate and nonrecurring charge for each termination provided. LES channel mileage applies as a recurring monthly charge for the airline distance between the serving wire centers associated with the locations involved. Channel mileage recurring monthly rates apply as a fixed and per mile rate element.

When LES connects a customer designated premises and a customer's equipment in a CIS arrangement, as set forth in Section 7.2.11(A)(2) preceding, an LES Channel Termination rate element will not apply at the CIS arrangement end of the service.

When LES connects to an ELS NNI Port Only Connection, as set forth in Section 7.2.11(A)(3) preceding, the NNI Port Only Connection rate element will apply in lieu of an LES channel termination at the ELS end of the service.

When LES connects a customer's equipment in a CIS arrangement to an ELS NNI Port Only Connection in another wire center, as set forth in Section 7.2.11(A)(4) preceding, an LES Channel Termination rate element will not apply at the CIS arrangement end of the service and an NNI Port Only Connection rate element will apply in lieu of an LES channel termination at the ELS end of the service. LES channel mileage will apply for the airline distance between the serving wire centers associated with the locations involved.

When LES connects to a Telephone Company provided switched Ethernet service network-to-network interface port only connection, the LES channel termination will not apply at the switched Ethernet service end of the service.

When LES connects a customer's equipment in a CIS arrangement to a switched Ethernet service network-to-network interface port only connection in another wire center, an LES Channel Termination rate element will not apply at either the CIS arrangement end of the service or the switched Ethernet service end of the service. LES channel mileage will apply for the airline distance between the serving wire centers associated with the locations involved.

Service availability limited. Refer to # footnote on Page 7-70.

© 2022 Frontier Communications Parent, Inc. All rights reserved

7. Special Access Service (Cont'd)

7.2 Service Descriptions (Cont'd)

7.2.11 LAN Extension Service# (Cont'd)

(F) Rate Regulations

(2) LES Term Plans

(a) LES is provided with a term plan of 3 or 5 years at rates set forth in Section 7.5.23 following. The customer must specify the term plan selected in its order for service. Rate elements associated with terminating LES at a Collocation arrangement are set forth in Section 19 following.

(b) At any time during the term commitment period, the customer may replace LES with LES of a higher transmission rate without incurring termination liability on the LES being replaced, provided that the term plan of the replacing LES is equal to, or greater than, the term commitment period of the plan being replaced.

(c) At any time during the term commitment period, the customer may convert to a new LES term plan of the same or different term commitment, subject following:

- No time-in-service credit will be granted for the period of time the replaced term commitment period was in effect.

- Termination liability will not apply to the plan being replaced, provided that the term commitment period of the replacing plan is equal to or longer than the term commitment period being replaced.

Service availability limited. Refer to # footnote on Page 7-70.

© 2022 Frontier Communications Parent, Inc. All rights reserved

7. Special Access Service (Cont'd)

7.2 Service Descriptions (Cont'd)

7.2.11 LAN Extension Service# (Cont'd)

(F) Rate Regulations (Cont'd)

(2) LES Term Plans (Cont'd)

All rate elements associated with LES must be under the same term plan with the same term commitment period.

(e) At expiration of the term commitment period, the prevailing rates for the current plan will continue until the customer cancels service or requests a new term plan.

(f) If service is disconnected in whole or in part prior to the end of the selected term commitment period, termination liability equal to the applicable monthly rate for the service multiplied by the number of months remaining in the unexpired portion of the term plan will apply. Minimum period charges as set forth in Section 5.2.5 preceding may also apply.

(g) Termination liability will not apply if the customer disconnects service due to a Telephone Company initiated rate increase. Within sixty calendar days of the rate increase, the customer must notify the Telephone Company in writing of its intent to disconnect service due to the increased rate and must disconnect the service within ninety calendar days of the rate increase.

(3) Cancellation of an LES order in whole or in part prior to the establishment of service is subject to the cancellation charges set forth in Section 5.2.3 preceding.

(4) A move in the point of termination of LES is subject to the regulations set forth in Section 7.4.5 following.

(5) The minimum period for LES is 36 months.

Service availability limited. Refer to # footnote on Page 7-70.

© 2022 Frontier Communications Parent, Inc. All rights reserved

7. Special Access Service (Cont'd)

7.2 Service Descriptions (Cont'd)

7.2.12 Reconfigure Service

(A) General

Reconfigure Service enables customers, through the use of the Reconfigure Service host computer, to reconfigure, in real-time, specific Special Access voice grade, DDS, and/or individual channels within a 1.544 Mbps or 44.736 High Capacity Service connected at digital cross connect systems. Customers gain access to the Reconfigure Service host computer through the use of a CPE terminal at their premises without going through normal service order procedures.

(B) Service Description

Reconfigure Service allows customers management and network reconfiguration capability of their voice grade, DDS, and/or individual channels within a 1.544 and/or 44.736 Mbps High Capacity Special Access Service. The reconfiguration is accomplished by either Telephone Company or customer access of the Reconfigure Service host computer. Access is gained by a customer from a dial-up line from a customer-provided terminal at their premises to access the intelligent controller - the Reconfigure Service host computer. The Reconfigure Service host computer assures that the services to be connected together for a given customer application have compatible characteristics to ensure proper operations and functions. Once the host computer validates the customer's commands, the instructions are communicated to the digital cross-connect system(s) (DCSs) associated with the customer's services to effect the reconfiguration. The DCSs interface at a DS1 or DS3 signal level and switch internally at a DS0, DS1, or DS3 level regardless of the type of access connection.

Reconfigure Service is available at those Hubs identified in National Exchange Carrier Association (NECA) Tariff F.C.C. No. 4. Reconfigure Service configurations may utilize multiple Hubs within a LATA. However, they must be interconnected using 1.544 Mbps/DS1 or 44.736/DS3 High Capacity interoffice facilities. Reconfigure Service utilizing DDS can only be provisioned from Hubs which provide both Reconfigure Service and DDS.

Customers can reconfigure their special access networks from their premises or they can have the Telephone Company perform the reconfiguration.

© 2022 Frontier Communications Parent, Inc. All rights reserved

7. Special Access Service (Cont'd)

7.2 Service Descriptions (Cont'd)

7.2.12 Reconfigure Service (Cont'd)

(C) Reconfigure Service Reconfiguration Options

Two network reconfiguration options are available to Reconfigure Service customers:

- Real Time
- Reservation

The real time option will make immediate changes to the network, while the reservation option will be executed at a specified time designated by the customer. Both types of reconfigurations are available whether the customer performs the reconfigurations or requests the Telephone Company to perform them.

© 2022 Frontier Communications Parent, Inc. All rights reserved

7. Special Access Service (Cont'd)

7.2 Service Descriptions (Cont'd)

7.2.12 Reconfigure Service (Cont'd)

Technical Specifications

Access to Reconfigure Service is through the use of dial-up services.

Services capable of being cross-connected by Reconfigure Service must have identical technical characteristics to ensure compatibility and proper operation, e.g., data to data, voice to voice. Reconfigure Service specifications are delineated in Technical Reference Pub TR-TSY-000366.

If the Telephone Company determines that the requested technical specifications are not compatible, the customer will be advised and given the opportunity to change the order.

Reconfigure Service is available twenty-four hours a day except during the performance of routine maintenance of Telephone Company facilities and equipment used to provide Reconfigure Service. The following is the schedule for routine maintenance:

Scheduled Maintenance

Sunday	12:00 a.m. - 6:00 a.m.
Monday	12:00 a.m. - 3:00 a.m.
First Sat./Month	12:00 a.m. - 2:00 a.m.

In addition to the routine downtime, unscheduled or emergency circumstances may limit availability.

Service Exclusions

The following types of service terminations and options are not supported with the Reconfigure Service offering:

1. Centrex
2. Switched Access Services
3. Shared Use High Capacity Services
4. Secondary legs of a multi-point bridging arrangement
5. DDS Secondary Channel Capability
6. Integrated Channel Service

© 2022 Frontier Communications Parent, Inc. All rights reserved

7. Special Access Service (Cont'd)

7.2 Service Descriptions (Cont'd)

7.2.12 Reconfigure Service (Cont'd)

(E) Reconfigure Service Options

End Link and Interoffice Facility Compatibility Verification

System verification of compatibility of the customer specified end links in the cross-connect reconfiguration request. Each end link is verified to ensure technical compatibility for directionality, signaling type, bandwidth and service group.

DS0 Circuit Reconfiguration

The system allows point-to-point rerouting of customer DS0 facilities.

DS1 Circuit Reconfiguration

The system allows point-to-point rerouting of customer DS1 facilities at the DS0 or DS1 level.

DS3 Circuit Reconfiguration

The system allows point-to-point rerouting of customer DS3 facilities at the DS1 or DS3 level.

Real Time Capability

The customer, using demand service requests, can reconfigure their network on a real-time basis.

Reservation Capability

The customer, using reservation service requests, can schedule reconfiguration for a future time on a confirmed basis. Reservations can be scheduled on a continuous or cyclical basis.

Network Model Capability

Customers can define a predetermined network configuration of multiple two-point cross-connects and initiate the large scale network reconfiguration with one command. This capability supports daytime/nighttime or weekday/weekend networks.

Basic Routing Capabilities

The customer can define facility routes or paths to be used by the system to connect access facilities in prespecified, user-defined tables.

© 2022 Frontier Communications Parent, Inc. All rights reserved

7. Special Access Service (Cont'd)

7.2 Service Descriptions (Cont'd)

7.2.12 Reconfigure Service (Cont'd)

(F) Reconfigure Service Configuration

Reconfigure Service provides customer-management capability of Special Access Service Networks as specified in (A) preceding. Reconfigure Service is provided from Reconfigure Service Hubs that are identified in the NECA Tariff No. 4.

Applicable rate elements with monthly rates are:

- Reconfigure Service VG/DDS Port*
- Reconfigure Service DS1 Port
- Reconfigure Service DS3 Port
- VG/DDS Channel Terminations (one per premises)
- VG/DDS Channel Mileage (as applicable)
- DS1 Channel Termination (one per premises)
- DS3 Channel Termination (one per premises)
- DS1 Channel Mileage (as applicable between the customer's serving wire center and Reconfigure Service Hub and between Reconfigure Service Hubs)
- DS3 Channel Mileage (as applicable between the customer's serving wire center and Reconfigure Service Hub and between Reconfigure Service Hubs)

* Reconfigure Service and DDS service can only be provided in Hub offices that support both services.

© 2022 Frontier Communications Parent, Inc. All rights reserved

7. Special Access Service (Cont'd)

7.2 Service Descriptions (Cont'd)

7.2.12 Reconfigure Service (Cont'd)

(F) Reconfigure Service Configuration (Cont'd)

Example: Reconfigure Service configuration utilizing two Reconfigure Service Hubs and seven customer premises locations:

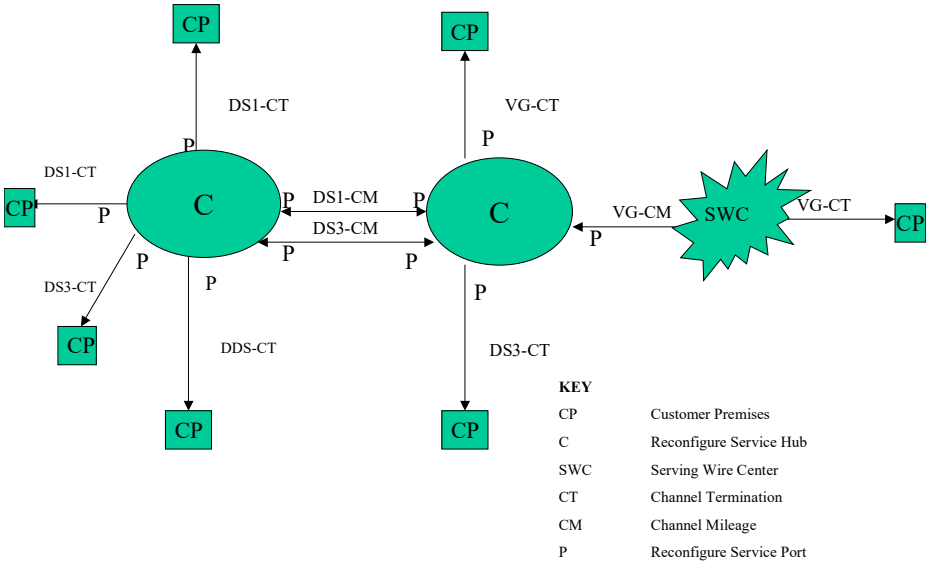

Rate elements with monthly recurring rates are:

- Channel Termination (2 DS3, 2 DS1, 2 VG and 1 DDS applicable)
- Channel Mileage (1 section of DS1, 1 section of DS3, and 1 section of VG applicable)
- Reconfigure Service Port Charges (11 applicable –4 DS3, 4 DS1 and 3 VG/DDS for Services terminated in the Reconfigure Service Hubs.

© 2022 Frontier Communications Parent, Inc. All rights reserved

7. Special Access Service (Cont'd)

7.2 Service Descriptions (Cont'd)

7.2.12 Reconfigure Service (Cont'd)

(F) Reconfigure Service Configuration (Cont'd)

Example: Reconfigure Service configuration utilizing one Reconfigure Service Hub and five customer premises locations:

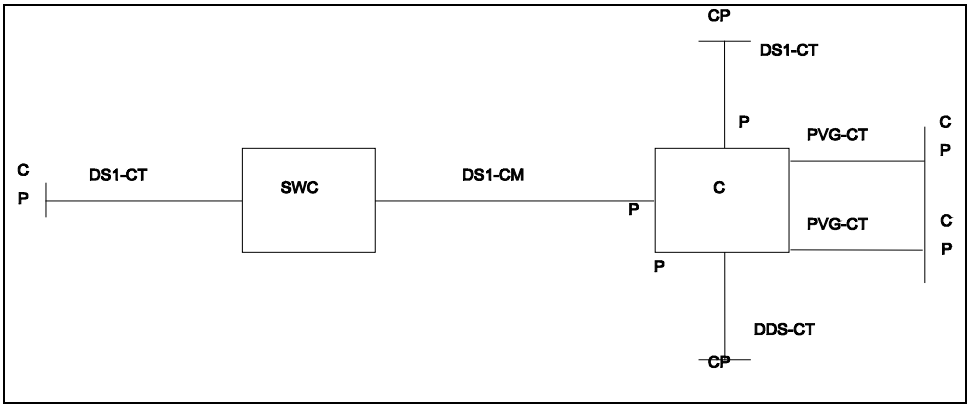

CP - Customer Premises
C - Reconfigure Service Hub
SWC - Serving Wire Center
CT - Channel Termination
CM - Channel Mileage
P - Reconfigure Service VG/DDS and DS1 Port

Rate elements with monthly rates are:

- Channel Termination (2 DS1, 2 VG and 1DDS applicable)
- Channel Mileage (1 section of DS1 applicable)
- Reconfigure Service Port Charges (5 applicable, 2 DS1 and 3 VG/DDS for services terminated in the Reconfigure Service Hub)

© 2022 Frontier Communications Parent, Inc. All rights reserved

7. Special Access Service (Cont'd)

7.2 Service Descriptions (Cont'd)

7.2.12 Reconfigure Service (Cont'd)

(G) Rate Element Description

(1) Service Establishment

The Nonrecurring Service Establishment charge applies per initial customer database setup. Included in this charge are the activities associated with installing the customer's network information in the Reconfigure Service Database, training the customer's personnel and providing training materials.

(2) Database Modification

This nonrecurring charge applies whenever the customer requests The Telephone Company to make a subsequent modification in their Reconfigure Service Database. A modification can be a change in security requirements or a change in administrative information (e.g. customer contact names and numbers, addition/deletion of authorized users).

(3) Telephone Company Performed Reconfiguration

This nonrecurring charge is applicable when the customer chooses to have Telephone Company personnel perform the reconfiguration activities. The Telephone Company reconfigures the customer's network based upon customer provided instructions.

This service is charged in increments of thirty (30) minutes for each occasion.

(4) Port Charges

Nonrecurring and monthly port charges apply per port termination of the DCS at the Reconfigure Service Hub office. There are three types of charges:

- Voice Grade/DDS Port Charge - Channel Port Termination for all voice grade and DDS service
- DS1 Port Charge - 1.544 Mbps Channel Port Termination
- DS3 Port Charge – 44.736 Mbps Channel Port Termination

© 2022 Frontier Communications Parent, Inc. All rights reserved

7. Special Access Service (Cont'd)

7.2 Service Descriptions (Cont'd)

7.2.13 Facilities Management Service

Effective May 1, 2009, requests for new FMS plans are no longer accepted.

© 2022 Frontier Communications Parent, Inc. All rights reserved

7. Special Access Service (Cont'd)

7.2 Service Descriptions (Cont'd)

7.2.13 RESERVED

© 2022 Frontier Communications Parent, Inc. All rights reserved

7. Special Access Service (Cont'd)

7.2 Service Descriptions (Cont'd)

7.2.13 RESERVED

© 2022 Frontier Communications Parent, Inc. All rights reserved

7. Special Access Service (Cont'd)

7.2 Service Descriptions (Cont'd)

7.2.13 RESERVED

© 2022 Frontier Communications Parent, Inc. All rights reserved

7. Special Access Service (Cont'd)

7.2 Service Descriptions (Cont'd)

7.2.13 RESERVED

© 2022 Frontier Communications Parent, Inc. All rights reserved

7. Special Access Service (Cont'd)

7.2 Service Descriptions (Cont'd)

7.2.13 RESERVED

© 2022 Frontier Communications Parent, Inc. All rights reserved

7. Special Access Service (Cont'd)

7.2 Service Descriptions (Cont'd)

7.2.13 RESERVED

© 2022 Frontier Communications Parent, Inc. All rights reserved

7. Special Access Service (Cont'd)

7.2 Service Descriptions (Cont'd)

7.2.13 RESERVED

© 2022 Frontier Communications Parent, Inc. All rights reserved

7. Special Access Service (Cont'd)

7.2 Service Descriptions (Cont'd)

7.2.13 RESERVED

© 2022 Frontier Communications Parent, Inc. All rights reserved

7. Special Access Service (Cont'd)

7.2 Service Descriptions (Cont'd)

7.2.13 RESERVED

© 2022 Frontier Communications Parent, Inc. All rights reserved

7. Special Access Service (Cont'd)

7.2 Service Descriptions (Cont'd)

7.2.13 RESERVED

© 2022 Frontier Communications Parent, Inc. All rights reserved

7. Special Access Service (Cont'd)

7.2 Service Descriptions (Cont'd)

7.2.13 RESERVED

© 2022 Frontier Communications Parent, Inc. All rights reserved

7. Special Access Service (Cont'd)

7.2 Service Descriptions (Cont'd)

7.2.13 RESERVED

© 2022 Frontier Communications Parent, Inc. All rights reserved

7. Special Access Service (Cont'd)

7.2 Service Descriptions (Cont'd)

7.2.13 RESERVED

© 2022 Frontier Communications Parent, Inc. All rights reserved

7. Special Access Service (Cont'd)

7.2 Service Descriptions (Cont'd)

7.2.14 Dedicated SONET Services

(A) General

The Telephone Company's Dedicated SONET Services are a family of optional Special Access High Capacity services provided using SONET-based technology. Dedicated SONET Services include the following Special Access services:

- Dedicated SONET Shared Dual Path (DSSDP), as set forth in (C)(2) following
- Dedicated SONET Shared Assurance Network (DSSAN), as set forth in (C)(3) following
- Dedicated SONET Optical Transport Services (DSOTS), as set forth in (C)(4) following
- Dedicated SONET Entrance Facilities (DSEF), as set forth in Section 7.2.15 following
- Dedicated SONET Broadband Transport (DSBT), as set forth in Section 8.2 following
- Dedicated SONET Shared Single Path (DSSSP), as set forth in Section 8.3 following
- Dedicated SONET Ring (DSR), as set forth in Section 23.1 following

Dedicated SONET services are designed to meet customer requirements for reliable and survivable networks.

Dedicated SONET services are provided on SONET facilities except where a service is extended on an "off-net" facility, i.e., DSSAN. There are no provisions within the SONET standard for asynchronous DS1 to DS3 multiplexing. Therefore, Dedicated SONET services are only guaranteed for the following interface to interface combinations:

OC3 W/ DS1 mapping - DS1	DS1 - DS1
OC3 w/ DS3 mapping - DS3	DS3 - DS3
STS1 w/ DS1 mapping - DS1	STS1 - STS1
STS1 w/ DS3 mapping - DS3	OC3 - STS1
OC3c - OC3c	OC3 - OC3
OC12 - DS1, DS3, OC3, OC3c, & OC12	OC12c - OC12c
OC48 – STS1, DS3, OC3, OC3c OC12, OC12c, &OC48	OC48c - OC48c

Not all interface combinations are available for all Dedicated SONET services.

© 2022 Frontier Communications Parent, Inc. All rights reserved

7. Special Access Service (Cont'd)

7.2 Service Descriptions (Cont'd)

7.2.14 Dedicated SONET Services (Cont'd)

(A) General (Cont'd)

Technical specifications are delineated in the following Technical References:

GR-253-CORE, Issue 4
"Synchronous Optical Network (SONET) Transport Systems: Common Generic Criteria"

GR-1374-CORE, Issue 1
"SONET Inter-Carrier Interface Physical Layer Generic Criteria for Carriers"

ANSI T1.105.01-2000 (R2005)
"Synchronous Optical Network (SONET) - Basic Description including Multiplex Structure, Rates and Formats"

IEEE 802.3-2005/Cor2/D2.0-2007, Telecommunications and information exchange between systems-Local and Metropolitan Areas Networks-Specific Requirements-Part 3, Released 1998.

IEEE 802.3z-1998, Supplement to Standard for Information Technology-Local and Metropolitan Area Networks, Part 3

© 2022 Frontier Communications Parent, Inc. All rights reserved

7. Special Access Service (Cont'd)

7.2 Service Descriptions (Cont'd)

7.2.14 Dedicated SONET Services (Cont'd)

(B) Definitions

Add/Drop Multiplexing, (ADM): a multiplexing function that allows lower level signals to be added or dropped from an optical carrier channel.

Customer Access Ring, (CAR): a survivable fiber ring that is constructed through at least two Central Offices/Wire Centers. Cars utilize unidirectional path-switched ring ADMs, typically operating at OC3 and OC12 rates.

Enhanced DSR node: See also the definition of Node following. An enhanced DSR node, available after March 20, 2003, provides additional feature functionality that is not available with the existing first-generation DSR nodes. Enhanced DSR nodes are capable of supporting DS1 and Gigabit Ethernet ports at the OC12, OC48 and OC192 levels.

Fiber path diversity: the provision of service using at least two fibers placed on physically separate paths, i.e., different conduit runs that do not pass through the same manhole(s). The cable paths are separated by at least 25 feet.

High Speed Interface: a DSR or DSOTS rate element on a partial ring service that allows high speed interconnection of the Company's facilities to the facilities of the customer or of a third party. High speed interconnection is provided at a fiber meet location that is mutually agreed upon by the Company and the customer.

Node: a DSR rate element and a designation of either a customer location or Company wire center on a SONET ring that has ADM capability. It is also the address of where a channelized (lower speed) service originates or terminates on a ring. Generally, the ring capacity determines the type of node. For DSR, see also Enhanced DSR node.

Optical Carrier Rate, (OC #): a SONET transmission signal/speed, line rate, or service. The rates are in multiples of an OC1, which is equivalent to an STS1 (51.84 Mbps), SONET's basic rate.

OC(#) Rate	Bandwidth Capacity
3	155.52 Mbps
12	622.08 Mbps
48	2.488 Gbps
192	9.952 Gbps

Optical Carrier Rate Concatenated, (OC#c): a "clear channel" SONET transmission using only one framing format. Generally, an OC3 signal provides three STS1s frame formats with 3 overheads for a total capacity of 2268 bytes per Synchronous Payload envelope (SPE) frame; in an OC3c signal, one STS3c frame format is used with one overhead, increasing the total payload capacity to 2340 bytes per SPE frame.

© 2022 Frontier Communications Parent, Inc. All rights reserved

7. Special Access Service (Cont'd)

7.2 Service Descriptions (Cont'd)

7.2.14 Dedicated SONET Services (Cont'd)

(B) Definitions (Cont'd)

OC12/3, (OC12 over 3): a node designation that denotes a ring line rate of OC12, but with port interface capability and capacity equal to OC3. An OC12 DSR could have one, some or all OC12/3 nodes.

OC12+3, OC48+3,OC192+3,OC192+12,and OC192+48: designations for nodes in ring-on-ring designs; the higher speed ADM is part of the true ring, and the lower speed ADM is connected for the purpose of mapping lower speed services onto the STS1s of the OC12, OC48 or OC192. Both nodes, the lower and higher speed node, of a ring-on-ring arrangement must be located in the same customer premises or wire center.

Port: a DSR rate element that denotes the interface at which a channelized or lower speed service terminates or originates at a DSR node.

Port Node: an arrangement on a DSR that interconnects the main DSR ring with a subtending DSR ring.

SONET, (Synchronous Optical NETwork): an international standard for the transmission of high capacity bandwidth over optical facilities. This synchronous transmission platform utilizes a modular multiplexing approach. Because of the large bandwidth, some of the payload is used to monitor, protect, manage and improve the transmission of the signal.

Subtending Ring: a DSR Service that subtends (interconnects with) a DSR main ring.

Synchronous Transport Signal Level, (STS1): a 51.84 Mbps signal that is the electrical equivalent of the OC1 or a DS3 with additional Mbps devoted to SONET overhead information. An STS1 can carry a DS3 or 28 DS1s when specifically formatted (Mapped). These DS1s may be accessed off-ring using the tariffed DS3 to DS1 multiplexing optional service or at an enhanced node via a DS3 Transmux port.

Transmuxing: the function of a DSR DS3 Transmux port that performs a DS3 to DS1 conversion at a DSR Enhanced Node. The DS3 to DS1 conversion allows a single DSR DS3 Transmux port (which includes a DS3 Transmux Facility to which the DS1 circuits are mapped) to be a facility associated with up to twenty-eight (28) VT1.5 mapped DSR DS1 ports. Such DS3 Transmux Facility will be provisioned upon ordering the associated DS1 Transmux port. Transmuxing within the DSR network retains DS1 visibility allowing for full, proactive maintenance capability of the DS1 signals.

Virtual Tributary, (VT): A SONET structure designed for transport of sub-STS1 payloads. A DS1 is mapped into the SONET format using a VT1.5 as a packaging mechanism that is internal to the SONET signal.

© 2022 Frontier Communications Parent, Inc. All rights reserved

7. Special Access Service (Cont'd)

7.2 Service Descriptions (Cont'd)

7.2.14 Dedicated SONET Services (Cont'd)

(C) Service Descriptions

(1) Reserved

(2) Dedicated SONET Shared Dual Path

Dedicated SONET Shared Dual Path, DSSDP, is an optional feature that provides High Capacity Special Access customers with a fully diverse and redundant transmission path through another wire center as a standby facility should there be a wire center fault at the customer's serving wire center (SWC), or should there be a cable cut between the customer's premises and the serving wire center or between wire centers.

DSSDP may terminate at a Hub where the underlying service may be multiplexed to higher or lower speed services. Also, multiplexing may be provided at the customer's premises and will be charged additionally as a network interface conversion. These rates are listed in 7.5.20(E) and (F).

DSSDP will provide a Special Access High Capacity customer a near-100% protected connection from point-to-point when both designated premises and SWCs are on the same or interconnected SONET rings.

(a) Terms and Conditions

Dedicated SONET Shared Dual Path will only be available as an end-to-end service between customer premises located where The Telephone Company has multi-wire center SONET-based fiber rings deployed in its local loop and IOF, Inter-Office Facilities.

DSSDP may also be provided on a portion of the circuit path as end-to-hub service, in cases where full SONET facilities do not exist or are not required.

DSSDP service at the customer premises will consist of a fiber ring routed through at least two wire centers, one of which is the customer's SWC. Interoffice rings connecting multiple wire centers will provide transport between customer premises rings or to wire center Hubs.

© 2022 Frontier Communications Parent, Inc. All rights reserved

7. Special Access Service (Cont'd)

7.2 Service Descriptions (Cont'd)

7.2.14 Dedicated SONET Services (Cont'd)

(C) Service Descriptions (Cont'd)

(2) Dedicated SONET Shared Dual Path (Cont'd)

(a) Terms and Conditions (Cont'd)

DSSDP service is available for the same term plan periods offered for DS1, DS3, and DSEF services. When ordered on an existing service, the DSSDP optional service is assigned the same expiration period as the underlying service.

DSSDP service intervals are negotiated as described in 5.2.1(B) preceding.

When STS1 signals are transmitted, the customer must specify how the signal is mapped, VT or DS3-mapped (see definition of Virtual Tributary in 7.2.14(B)).

Extended Superframe Format (ESF) is required on all DS1 services in order to ensure performance objectives.

The Company will determine the other wire center(s) included in provisioning DSSDP.

The Company will determine the type (e.g., bidirectional) of self healing ring that will be utilized and the path of the primary and secondary signals within interconnected rings.

Standby mileage for DSSDP is the same as the per mile measurement for the main or underlying service.

The customer will be billed additional charges for any charges levied the Telephone Company for space and power required for the ADMs on the Company's side of the network interface.

(b) Deployment

Deployment of DSSDP service for 1994 and 1995 is planned for the following areas:

1994	1995
Charleston, WV	
Clarksburg, WV	

© 2022 Frontier Communications Parent, Inc. All rights reserved

7. Special Access Service (Cont'd)

7.2 Service Descriptions (Cont'd)

7.2.14 Dedicated SONET Services (Cont'd)

(C) Service Descriptions (Cont'd)

(2) Dedicated SONET Shared Dual Path (Cont'd)

(c) Rates and Charges

The rates for Dedicated SONET Shared Dual Path as specified in 7.5.20 apply per point of termination and are in addition to the Channel Termination and Channel Mileage rates and charges for the underlying High Capacity service(s). In addition to the DSSDP Channel Termination, Standby Mileage and Network Interface recurring charges, one-time nonrecurring charges also apply for each Network Interface and Channel Termination. See below:

Dedicated SONET SHARED DUAL PATH

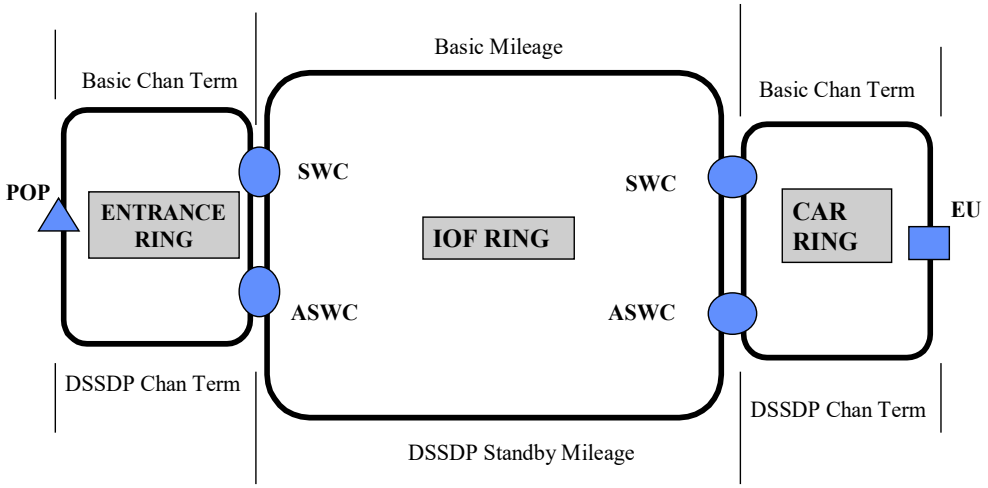

SWC = Serving Wire Center

ASWC = Alternate Serving Wire Center

EU = End User

© 2022 Frontier Communications Parent, Inc. All rights reserved

7. Special Access Service (Cont'd)

7.2 Service Descriptions (Cont'd)

7.2.14 Dedicated SONET Services (Cont'd)

(C) Service Descriptions (Cont'd)

(3) Dedicated SONET Shared Assurance Network, DSSAN#

Dedicated SONET Shared Assurance Network, DSSAN, is a special access offering that provides a LATA-wide network that maximizes fault tolerance and disaster recovery capabilities. DSSAN blends the design and survivability features of Dedicated SONET Ring (DSR), Dedicated SONET Shared Dual Path (DSSDP), and Dedicated SONET Entrance Facilities (DSEF) services along with asynchronous services to provide transport links with high capacity, performance and reliability levels. The Company will ensure performance and reliability levels with 24-hour network surveillance.

DSSAN consists of transmission facilities that are ordered and provisioned from end to end. DSSAN service and billing components are entrance rings, and DS1, DS3, OC3 and OC3c transport channels.

The DSSAN entrance ring is provided at customer designated Points of Presence (POPs). POPs are primary customer locations where traffic within the LATA is aggregated or from which traffic is distributed in the LATA. The DSSAN POP Entrance Ring is a high speed SONET access ring with a minimum capacity of 12 STS1s. This dedicated, self-healing, diverse fiber path SONET ring will have at least 3 access points or nodes, the POP and two wire centers, a Serving Wire Center (SWC) and an alternate Wire Center. At the customer's option, a DSSAN POP Entrance Ring may include a fourth node, an additional POP node.

With DSSAN, the customer's traffic is transported across the Telephone Company's network from a POP entrance ring at the customer's primary point of presence (POP) to a secondary customer designated premises (a.k.a., end user or EU), and from the Telephone Company Hubs to customer POPs. These channels are rated and charged dependent on interoffice (IOF) mileage and on how much of the end to end channel is on-net or off-net.

Effective December 4, 2007, orders for new DSSAN Entrance Rings or additional capacity for existing DSSAN Entrance Rings are no longer permitted. The Telephone Company will continue to provide DSSAN pursuant to this Section 7.2.14(C)(3) on any existing DSSAN that is in-service as of December 3, 2007, or any order for DSSAN that is placed with the Telephone Company prior to December 4, 2007 (collectively, Existing DSSAN), subject to the following conditions:

For any Existing DSSAN that is currently subscribed to a 5-year term plan or that is within a 60-day extension period immediately after expiration of a 5-year term plan, the Telephone Company will continue to provide the Existing DSSAN for an additional six (6) months beyond the expiration date of the customer’s current commitment period, or until the customer discontinues service, whichever comes first. Subject to availability of facilities and equipment, DSSAN Transport Channels may be added up to the total capacity of the Existing DSSAN Entrance Rings. Effective December 4, 2007, moves and rearrangements will no longer be permitted.

© 2022 Frontier Communications Parent, Inc. All rights reserved

7. Special Access Service (Cont'd)

7.2 Service Descriptions (Cont'd)

7.2.14 Dedicated SONET Services (Cont'd)

(C) Service Descriptions (Cont'd)

(3) Dedicated SONET Shared Assurance Network# (Cont'd)

on-net: that part of the network containing survivable service capability, i.e. provisioned over diverse fiber path SONET ring(s). On-net rate elements are provisioned over diverse fiber path SONET facilities end to end.

off-net: that part of the DSSAN transport that is asynchronous high capacity transport or is SONET transport without fiber path diversity. Off-net rate elements have components that are either asynchronous or has SONET transport without fiber path diversity.

DSSAN is available only in those locations where SONET architecture is capable of providing specified levels of performance and reliability.

Service availability limited. Refer to # footnote on Page 7-106.

© 2022 Frontier Communications Parent, Inc. All rights reserved

7. Special Access Service (Cont'd)

7.2 Service Descriptions (Cont'd)

7.2.14 Dedicated SONET Services (Cont'd)

(C) Service Descriptions (Cont'd)

(3) Dedicated SONET Shared Assurance Network# (Cont'd)

An illustration of DSSAN is shown below:

Dedicated SONET Shared Assurance Network (DSSAN)

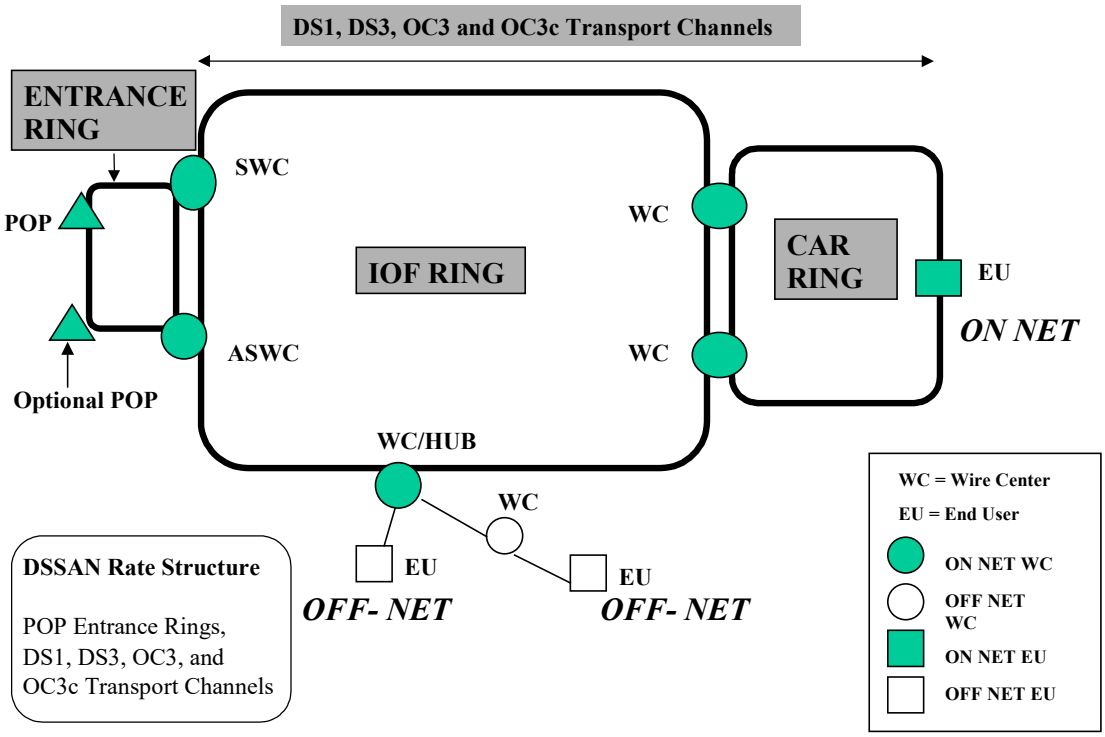

Service availability limited. Refer to # footnote on Page 7-106.

© 2022 Frontier Communications Parent, Inc. All rights reserved

7. Special Access Service (Cont'd)

7.2 Service Descriptions (Cont'd)

7.2.14 Dedicated SONET Services (Cont'd)

(C) Service Descriptions (Cont'd)

(3) Dedicated SONET Shared Assurance Network# (Cont'd)

(a) Terms and Conditions

DSSAN is a LATA wide service.

DSSAN requires a minimum service commitment of the greater of either 1) a minimum of 336 equivalent DS1 transport circuits within the LATA or 2) 90% of the customer's embedded base of high capacity special access within the LATA. The minimum service commitment must be met within the first eighteen months of service, i.e., within the conversion period.

The 90% commitment level is for the total DS1 equivalency of all DS1 and DS3 High Capacity Special Access circuits (as defined in Section 7), and 90% of each service category of OC3 and above (as defined in Sections 7 and 8). The effective date of the customer's agreement letter with the Company will serve as the date the count is determined.

DSSAN is available for a minimum commitment period of 5 years. The contract date will be the date the first new DSSAN Transport Channel is installed or existing Special Access Circuit is converted to DSSAN.

All DSSAN Transport Channels are provided with the same contract date regardless of when implemented, and may be ordered and provisioned up to the contract date.

A customer's primary POP(s) must access the Telephone Company's network via DSSAN POP Entrance Ring(s) with OC12 network interfaces. The customer must purchase a minimum of 4 STS3s of POP Entrance Ring capacity.

Additional capacity at each POP Entrance Ring can be further supplemented in increments of one STS3 as needed.

Service availability limited. Refer to # footnote on Page 7-106.

© 2022 Frontier Communications Parent, Inc. All rights reserved

7. Special Access Service (Cont'd)

7.2 Service Descriptions (Cont'd)

7.2.14 Dedicated SONET Services (Cont'd)

(C) Service Descriptions (Cont'd)

(3) Dedicated SONET Shared Assurance Network# (Cont'd)

(a) Terms and Conditions (Cont'd)

The Company will design and size entrance ring(s) and select the wire center nodes on entrance ring(s).

As an option, the customer may add a second POP to the DSSAN POP Entrance Ring. The second POP must be for restoral only.

Dual entrances at customer premises and Company wire centers are not considered a standard feature but may be provisioned in accordance with special construction tariffs and rates.

The available POP to EU interface combinations are:

POP	EU
OC12	DS1
OC12	DS3
OC12	OC3
OC12	OC3c

The customer has responsibility of providing CFA (connecting facility assignment) at the POP.

The Company will manage the transport network between the customer's CFA at the POP wire center(s) and the secondary premises, thus eliminating the need for intermediate DS3 Hubs.

DSSAN includes the connection of off-net services that are DS1 and higher capacity services. Services below DS1 are available from Section 7 of this Guide and must be multiplexed to a DS1 level. The customer is responsible for managing DS1 Hubs and must deliver multiplexed/hubbed DS1 circuits to an on-net wire center.

Service availability limited. Refer to # footnote on Page 7-106.

© 2022 Frontier Communications Parent, Inc. All rights reserved

7. Special Access Service (Cont'd)

7.2 Service Descriptions (Cont'd)

7.2.14 Dedicated SONET Services (Cont'd)

(C) Service Descriptions (Cont'd)

(3) Dedicated SONET Shared Assurance Network# (Cont'd)

(a) Terms and Conditions (Cont'd)

DSSAN Transport Channels are available at two (2) levels of service, basic and premium.

Basic service provides automatic protection switching (APS) against fiber failures for the on-net portions of DS1 and higher capacity channels. On-net fiber path diversity provides fiber survivability with full redundancy from the customer's secondary premise (end user premise or EU) to the POP (i.e., working and protect fiber path diversity).

Premium service provides APS against fiber failure and failure of intermediate electronics. Its dual path survivability provides near 100% fiber and Wire Center (intermediate electronics) survivability with full redundancy from the EU to the POP.

The customer may add additional services (entrance ring capacity and transport channels) to DSSAN at any time up to and including the expiration date of the contract period.

The DSSAN contract period is for 5 years. Sixty days prior to contract expiration, the Company will notify the customer of pending expiration. If on the expiration date, the Company has not received any notice from the customer, the Company will continue to bill the customer at the current rate for the next sixty (60) days. The existing minimum commitment levels and termination liabilities will remain in effect for the 60-day extension period. If at the end of the sixty days, the Customer has not notified the Company to disconnect or renew service, the Customer's DSSAN service will automatically be renewed at the currently effective 5 year rate and new service commitment levels will be established as of the new contract date.

Moves and rearrangements of services are subject to the same nonrecurring charges as a new installation.

DSSAN, including off-net arrangement specified in Section 7.2.14 preceding, is provided with a one minute Special Access Service Guarantee.

Service availability limited. Refer to # footnote on Page 7-106.

© 2022 Frontier Communications Parent, Inc. All rights reserved

7. Special Access Service (Cont'd)

7.2 Service Descriptions (Cont'd)

7.2.14 Dedicated SONET Services (Cont'd)

(C) Service Descriptions (Cont'd)

(3) Dedicated SONET Shared Assurance Network# (Cont'd)

(b) Deployment and Availability

DSSAN is available based on negotiated intervals as described in Section 5.2.1(B) preceding.

DSSAN is only available where there is sufficient SONET technology in the network to meet the performance requirements for DSSAN service.

The Company is solely responsible for DSSAN deployment and design.

(c) Conversions

The DSSAN minimum service commitment as defined in (7.2.14(C)(3)(a)) must be met within an eighteen (18) month conversion period. The DSSAN conversion period begins on the date of receipt of the first DSSAN order following the completion of Inter-operability Testing (see 7.2.14(C)(3)(f)).

Conversion of existing Telephone Company Special Access high capacity services to DSSAN is done without termination liability on the existing service(s). Any DSSAN nonrecurring charges will apply.

During the conversion process, embedded services are charged the existing rate until converted. Services converted are charged the DSSAN rates immediately.

Service availability limited. Refer to # footnote on Page 7-106.

© 2022 Frontier Communications Parent, Inc. All rights reserved

7. Special Access Service (Cont'd)

7.2 Service Descriptions (Cont'd)

7.2.14 Dedicated SONET Services (Cont'd)

(C) Service Descriptions (Cont'd)

(3) Dedicated SONET Shared Assurance Network# (Cont'd)

Rate Regulations

Monthly recurring charges apply for the POP entrance rings and for the transport channels. Additional monthly charges apply for the two POP entrance ring options and for additional fiber mileage in the entrance ring.

- The POP Entrance Ring is rated per STS3 with a minimum of 4 STS3s and to include up to 10 air miles of fiber in the rings circumference. In addition, the rate includes low speed cards to be provisioned as needed.

  Entrance rings over 10 miles in circumference are billed an additional charge for each mile over 10 for each group of 16 STS3s (16 STS3s is the marker used to determine when to build another or new ring).

  The optional two POP entrance ring has the same rate structure as the standard one POP DSSAN entrance ring.

- The DSSAN Transport Channels are rated based on capacity, service level and how much of the circuit is on-net. The banded flat rate includes IOF mileage and the local loop to the end user. The rate bands are mileage sensitive.

  The two levels of service are basic and premium.

  The optical carrier channels (OC3 and OC3c) are differentiated as to whether the EU network interface is two fiber (2F) or four fiber (4F). The four fiber interface includes a second card for 1+1 protection.

Service availability limited. Refer to # footnote on Page 7-106.

© 2022 Frontier Communications Parent, Inc. All rights reserved

7. Special Access Service (Cont'd)

7.2 Service Descriptions (Cont'd)

7.2.14 Dedicated SONET Services (Cont'd)

(C) Service Descriptions (Cont'd)

(3) Dedicated SONET Shared Assurance Network# (Cont'd)

Rate Regulations (Cont'd)

Nonrecurring charges are applicable for installations, rearrangements and changes.

Upon completion of conversion, the customer is subject to the following minimum monthly charges:

- the full monthly rate for the 90% commitment level of transport channels unless the actual count exceeds the commitment level; then the billing will be for the actual count

  or not less than

  336 DS1 equivalent transport links. Any shortfall is rated as Basic On-net in the 0-3 Mile Band.

- 4 STS3s for each DSSAN POP entrance location.

(e) Termination Liability

During the conversion period, the customer may terminate its commitment for DSSAN service without termination liability if the total number of in-service DS1 equivalent transport services is less than one hundred (100).

In all other instances, DSSAN is subject to termination liabilities if the entire service is terminated or individual services are disconnected during the commitment period as follows.

Service availability limited. Refer to # footnote on Page 7-106.

© 2022 Frontier Communications Parent, Inc. All rights reserved

7. Special Access Service (Cont'd)

7.2 Service Descriptions (Cont'd)

7.2.14 Dedicated SONET Services (Cont'd)

(C) Service Descriptions (Cont'd)

(3) Dedicated SONET Shared Assurance Network# (Cont'd)

(e) Termination Liability (Cont'd)

During the conversion period, termination liability applies as follows:

- If the full DSSAN contract is terminated prior to the customer satisfying the minimum service commitment (i.e., 336 equivalent DS1s or the 90% commitment level, whichever is greater), the termination charge is 100% of the monthly rate for each Transport Channel that is in service as of the cancellation date and 100% of the monthly rate for the minimum 4 STS3s at the POP Entrance Ring for each month remaining in the conversion period; plus, a charge of 25% of the monthly rate for the minimum service commitment (Entrance ring and Transport Channels) for month nineteen (19) through the remainder of the 5 year service period. The monthly charge for the shortfall in Transport Channels will be assessed at the 0-3 Mile Band rate.

- If the contract is terminated and the minimum service commitments have been met, the termination liability is 100% of the monthly recurring charges for all of the transport channels and entrance ring STS3s in service on the cancellation date for the first 18 months plus 25% of the monthly charges for the remainder of the five year contract period.

- If individual DSSAN POP Entrance Ring STS3s or DSSAN Transport Channels are disconnected during the conversion period, no termination liability is assessed.

Service availability limited. Refer to # footnote on Page 7-106.

© 2022 Frontier Communications Parent, Inc. All rights reserved

7. Special Access Service (Cont'd)

7.2 Service Descriptions (Cont'd)

7.2.14 Dedicated SONET Services (Cont'd)

(C) Service Descriptions (Cont'd)

(3) Dedicated SONET Shared Assurance Network# (Cont'd)

(e) Termination Liability (Cont'd)

After conversion but prior to contract expiration, liability applies as follows:

- If the entire DSSAN contract is cancelled, the liability charge is 25% of the monthly rate for the minimum service commitments (i.e., 4 STS3s and the greater of either 336 equivalent DS1s or the 90% commitment level count for DS1s and DS3s; and for each transport channel category of OC3 and above) for each month remaining in the contract period.

- If individual DSSAN POP Entrance Ring STS3s and DSSAN Transport Channels are disconnected after the conversion period but prior to contract expiration, no termination liability charges apply. The minimum monthly charge may apply.

The customer may reduce the 90% commitment count by paying termination liability on the amount of circuits by which it reduces the commitment count. However, the commitment level can never be reduced below 336 equivalent DS1s. Termination liability is described above.

Termination liability will be forgiven and the 90% commitment level will be reduced without penalty if the customer's reduction is due to the loss of a federal government contract (e.g., FTS 2001).

(f) Initial Ordering Period

In the event that within 60 days of the installation of the first end to end DSSAN order, service does not meet transmission performance, protection switching and performance monitoring criteria referenced in this Guide (Technical Reference GR-253-CORE, Issue 4) either (1) the customer may cancel its request for DSSAN without termination liability, or (2) the company will inform the customer that its request for DSSAN can not be satisfied, in which case no termination liability would be applicable.

Service availability limited. Refer to # footnote on Page 7-106.

© 2022 Frontier Communications Parent, Inc. All rights reserved

7. Special Access Service (Cont'd)

7.2 Service Descriptions (Cont'd)

7.2.14 Dedicated SONET Services (Cont'd)

(C) Service Descriptions (Cont'd)

(4) Dedicated SONET Optical Transport Service (DSOTS)#

(a) General

Dedicated SONET Optical Transport Service (DSOTS) provides managed optical transport of multiple protocols that are transmitted over a single fiber optic pair. DSOTS is configured in a diversely routed ring architecture or topology and can be arranged as a full (closed) ring or as a partial ring. The ring architecture allows for point-to-point optical services of varying wavelengths to be multiplexed on or off of the ring.

DSOTS allows for the native transmission of multiple high-speed protocols of various wavelengths over a single customized network. The wavelengths are arranged in a channelized format such that the protocol transmitted over each channel is independent of every other channel on the DSOTS ring. The customer must specify, by channel, the interface that defines the transmission speed and protocol being transmitted over the associated wavelength.

Effective February 15, 2007, orders for new DSOTS rings (including both partial and full rings) are no longer permitted. The Telephone Company will continue to provide DSOTS pursuant to this Section 7.2.14(C)(4) on any existing DSOTS that is in-service as of February 15, 2007, or any order for DSOTS that is placed with the Telephone Company prior to February 14, 2007 (collectively, Existing DSOTS), subject to the following conditions:

a. For any Existing DSOTS that is currently subscribed to a term plan (i.e., commitment periods of 3-, 5-, and 7-years), the Telephone Company will continue to provide the Existing DSOTS for an additional six (6) months beyond the expiration date of the customer's current commitment period, or until the customer discontinues service, whichever comes first. Subject to availability of facilities and equipment, certain moves, additions and/or changes to the Existing DSOTS are permitted provided that such moves, additions and/or changes do not require a new commitment period or an extension to an existing commitment period.

b. For any Existing DSOTS whose term plan expired prior to February 15, 2007, but the Existing DSOTS continued on a month-to-month basis at prevailing rates, the Telephone Company will continue to provide the Existing DSOTS until August 16, 2007, or until customer discontinues service, whichever comes first. Moves, additions, and/or changes are not permitted.

© 2022 Frontier Communications Parent, Inc. All rights reserved

7. Special Access Service (Cont'd)

7.2 Service Descriptions (Cont'd)

7.2.14 Dedicated SONET Services (Cont'd)

(C) Service Descriptions (Cont'd)

(4) Dedicated SONET Optical Transport Service (DSOTS)# (Cont'd)

(b) Terms and Conditions

A DSOTS full (closed) ring provides connectivity to multiple customer designated locations (nodes). A full ring must have a minimum of three nodes at different locations or two nodes at different locations with a network optimization mid-span amplifier. At least one of the devices (node or amplifier) must be located in a Telephone Company Central Office (CO) and one must be located at a customer's designated premises.

A DSOTS partial ring connects multiple customer designated locations (nodes) between fiber-meet locations at which high-speed interconnection of the Telephone Company's backbone network facilities to the customer's facilities or the facilities of a third party occurs. Partial ring service may only be interconnected to (1) another partial ring provided by the Telephone Company or (2) ring facilities provided by the customer or a third party. The portion of the ring provided by the customer or third party must use vendor equipment that matches the equipment used by the Telephone Company and must maintain the same vintage in software release as the Telephone Company. Upon written notice by the Telephone Company, the customer or third party will have sixty (60) days in which to complete the change-out of any software release deployed by the Telephone Company. A fiber-meet may occur at a customer's designated premises, in a Telephone Company CO, or at a location that is mutually agreeable to both the customer and the Telephone Company. Such location will be designated as a premises for the purpose of administering the general regulations set forth in this Guide.

When the fiber-meet occurs at a customer's designated premises, the point of interconnection between the Telephone Company's facilities and the facilities of the customer or of a third party shall be a node.

When the fiber-meet occurs in a Telephone Company CO, high-speed interconnection from the device (node or amplifier) occurs at a Collocation arrangement via fiber cross-connects between the Telephone Company's fiber optic facilities and the customer's or third party's facilities.

When the fiber-meet occurs at a mutually agreed upon location, the point of interconnection shall be a high-speed (pass-through) interface as set forth in (c)(4) following.

Service availability limited. Refer to # footnote on Page 7-117.

© 2022 Frontier Communications Parent, Inc. All rights reserved

7. Special Access Service (Cont'd)

7.2 Service Descriptions (Cont'd)

7.2.14 Dedicated SONET Services (Cont'd)

(C) Service Descriptions (Cont'd)

(4) Dedicated SONET Optical Transport Service (DSOTS)# (Cont'd)

(b) Terms and Conditions (Cont'd)

The fiber-meet is subject to the regulations set forth in (b)(1) through (b)(5) following. A partial ring must have a minimum of two devices (nodes or amplifiers) one of which must be a node. Additionally, at least one of the devices (node or amplifier) must be located in a Telephone Company CO. When the fiber-meet occurs via a high-speed (pass-through) interface at a mutually agreed upon location, that interface is provided in lieu of the device (node or amplifier) at that location.

The Telephone Company's network design will define the optical parameters at the fiber-meet locations. The Telephone Company is responsible for the quality and integrity of the high-speed optical signal at the fiber-meet where its facilities are interconnected to the facilities of the customer or of the third party. The Telephone Company bears no responsibility for the optical parameters beyond the fiber-meet (i.e., in the facilities of the customer or of the third party). The customer or third party is responsible for engineering its portion of the jointly provided ring. At their option, the Telephone Company will engineer the customer or third party's portion of the ring within the LATA subject to Additional Engineering as set forth in Section 13.1 following.

The DSOTS ring is comprised of nodes, ring mileage, network optimization (amplification), high-speed (pass-through) interfaces (certain partial ring configurations only), and optical transport channels. These elements are described in (c) following and are provided at the rates set forth in Section 7.5.24 following.

The customer will be billed additional charges for any charges levied the Telephone Company for space and power required to place nodes on the Company's side of the network interface.

Connection of DSR to a DSOTS ring is provided over an equal speed, unprotected optical transport channel (e.g. a 155.52 Mbps unprotected channel would connect to an OC3 DSR node). Each node on the DSR ring must be located at the same customer designated premises or in the same Telephone Company CO as its corresponding DSOTS node. All other applicable DSR regulations as set forth in Section 23.1 following apply to the derived DSR Service.

Service availability limited. Refer to # footnote on Page 7-117.

© 2022 Frontier Communications Parent, Inc. All rights reserved

7. Special Access Service (Cont'd)

7.2 Service Descriptions (Cont'd)

7.2.14 Dedicated SONET Services (Cont'd)

(C) Service Descriptions (Cont'd)

(4) Dedicated SONET Optical Transport Service (DSOTS)# (Cont'd)

(b) Terms and Conditions (Cont'd)

Connection of Dedicated SONET Broadband Transport (DSBT) to a DSOTS ring is provided over an equal speed OC3/OC3c, OC12/OC12c, OC48/OC48c, or OC192/OC192c protected or unprotected optical transport channel as described in (c)(5) following.

Connection of an Ethernet Private Line OC3c or OC12c Ethernet-to-SONET mapped service is provided over an equal speed SONET OC3c or OC12c protected optical transport channel as described in (c)(4) following.

Connection of an Ethernet Private Line 1 Gbps Ethernet Full Rate service is provided over a Gigabit Ethernet optical transport channel.

A DSOTS ring may also be connected to a Telephone Company provided dedicated SONET ring, Telephone Company provided point-to-point SONET service or Telephone Company provided ethernet private line service, provided that such connections are technically and operationally feasible, as determined by the Telephone Company.

The use of a multi-port interface card requires that all channels on a single card be interrupted during periods when the Telephone Company is performing maintenance on that card. No credit for such periods of interruption will apply.

The customer is responsible to ensure that its facilities and equipment meet any applicable technical requirements or limitations for the protocol being transmitted over the optical transport channels.

The Telephone Company is responsible for the overall design and configuration of the DSOTS ring. Construction of the ring will not begin until such design and configuration are mutually agreeable to both the customer and the Telephone Company.

Credit for service interruption of DSOTS is set forth in Section 2.7.1(A) preceding.

The technical specifications for DSOTS are delineated in Technical References GR-2918-CORE, Issue 6; GR-2979-CORE, Issue 5; GR-1312-CORE, Issue 3; ITU-T G.959.1; and ITU-T G.692. Technical specifications for the underlying protocols transmitted over the DSOTS ring are specified in (c)(4) following.

Service availability limited. Refer to # footnote on Page 7-117.

© 2022 Frontier Communications Parent, Inc. All rights reserved

7. Special Access Service (Cont'd)

7.2 Service Descriptions (Cont'd)

7.2.14 Dedicated SONET Services (Cont'd)

(C) Service Descriptions (Cont'd)

(4) Dedicated SONET Optical Transport Service (DSOTS)# (Cont'd)

(b) Terms and Conditions (Cont'd)

When DSOTS is provided in a partial ring configuration, the following applies.

(1) The customer must provide the Telephone Company with its fiber optic facility requirements (i.e., whether it will use single mode fiber or multi-mode fiber) prior to the Telephone Company ordering the necessary devices (nodes and amplifiers) to provide the requested service. The customer may utilize its own fiber optic facilities or the facilities of a third party.

(2) The customer must provide, at no cost to the Telephone Company, suitable and secure space, suitable environmental conditions, an uninterrupted power supply, building entrance facilities, and conduit for placement of the facilities and network equipment at its locations as necessary to provide the service.

(3) Interconnection to DSOTS partial ring services may occur (i) at the customer's designated premises for which interconnection will occur via a node, (ii) in a Telephone Company CO for which a node or amplification device and fiber cross-connects to a collocation arrangement within that CO (as described in Section 19) will apply, or (iii) at a mutually agreed upon location via a high-speed (pass-through) interface as described in (c)(4) following.

(4) Interconnection to DSOTS partial ring service is limited to high-speed fiber interconnection of the Telephone Company's backbone network fiber optic facilities and the fiber optic facilities of the customer or of a third party. Except as allowed under (c)(4) following, interconnection to other Telephone Company services may not occur at a premises which the customer has designated at its fiber-meet location.

(5) When ordering a transport channel that originates at and terminates to devices that are not within the partial ring provided by the Telephone Company, the customer must provide the Telephone Company with a copy of the order. This order provides the Telephone Company with authority to perform the necessary mapping of the channel through the partial ring to ensure continuity of the signal over the jointly provided ring. A Channel Mapping nonrecurring charge will apply for each channel mapped through the Telephone Company provided partial ring. Channel mapping charges do not apply when ordering point-to-point or point-to-meet-point optical transport channels. Channel mapping is further described in (c)(5) at the charge set forth in 7.5.24(G).

Service availability limited. Refer to # footnote on Page 7-117.

© 2022 Frontier Communications Parent, Inc. All rights reserved

7. Special Access Service (Cont'd)

7.2 Service Descriptions (Cont'd)

7.2.14 Dedicated SONET Services (Cont'd)

(C) Service Descriptions (Cont'd)

(4) Dedicated SONET Optical Transport Service (DSOTS)# (Cont'd)

(c) Service Components

(1) Nodes are Dense Wave Division Multiplexing (DWDM) devices located at customer designated premises or Telephone Company wire centers from which optical transport channels are multiplexed on or off of the DSOTS ring. The type of node that is deployed at each location is determined by the number of optical transport channels that will be multiplexed on or off of the DSOTS ring at that location.

4 Channel Node
Placement of a 4 channel node at a location enables up to 4 protected optical transport channels to be deployed. Each protected optical channel may be replaced by two unprotected optical channels up to a maximum of 8 possible channels on the node. A 4 channel node may be utilized as the primary node at a location or as an expansion node to expand the capacity of a 16 channel primary node. 4 channel nodes are subject to the availability of suitable facilities and equipment to provide such device. No more than one 4 channel node will be provided at a location.

16 Channel Node
Placement of a 16 channel node at a location enables up to 16 protected optical transport channels to be deployed. Each protected optical channel may be replaced by two unprotected optical channels up to a maximum of 32 possible channels on the primary node.

The capacity of a 16 channel primary node may be increased through the addition of an expansion node at the same location. A 4 channel expansion node enables up to 20 protected optical transport channels (i.e., 16 on the primary node and 4 on the expansion node) to be deployed at a single location. Each protected optical channel may be replaced by 2 unprotected optical channels up to a maximum of 40 possible channels at that location. A 16 channel expansion node enables up to 32 protected optical transport channels (i.e., 16 on the primary node and 16 on the expansion node) to be deployed at a single location. Each protected optical channel may be replaced by two unprotected optical channels up to a maximum of 64 possible channels at that location.

The maximum number of optical transport channels that can be deployed at a single location is dependent upon the specific configuration of the DSOTS ring and the type of optical transport channels being deployed from that location.

Service availability limited. Refer to # footnote on Page 7-117.

© 2022 Frontier Communications Parent, Inc. All rights reserved

7.2 Service Descriptions (Cont'd)

7.2.14 Dedicated SONET Services (Cont'd)

(C) Service Descriptions (Cont'd)

(4) Dedicated SONET Optical Transport Service (DSOTS)# (Cont'd)

(c) Service Components (Cont'd)

(2) For full ring service configurations, DSOTS Ring Mileage is the total of airline distances between devices (nodes and amplifiers) rounded up to the nearest mile. The mileage rate is based on total ring capacity and not on individual services between devices. For example, the mileage charge for a five device ring with two mid-span amplifiers and a distance of 4.3 miles between each device (21.5 total miles) would be calculated by multiplying the mileage rate in Section 7.5.24 following by 22 miles.

For partial ring service configurations, DSOTS Ring Mileage is the total of linear airline distances between fiber-meet locations (customer designated premises, CO or mutually agreed upon location, as applicable) and each device (node or amplifier) on the partial ring. The total mileage is then rounded up to the nearest mile.

The mileage between devices (e.g., an initial node and an expansion node or an At-Node amplifier, as applicable) located at the same customer designated premises or Telephone Company CO is zero. This mileage calculation applies regardless of the number of services on the ring.

(3) Network Optimization provides for amplification of the signal to ensure acceptable optical levels. When required, amplification is performed at the node (primary node or expansion node) or in a Telephone Company CO when mid-span amplification of the signal is required between nodes. Node amplification occurs in one or two directions (East to West and/or West to East). Amplification in two directions requires the use of two at-node amplifiers. Mid-span amplification occurs simultaneously in both directions (East to West and West to East). The Telephone Company shall have sole responsibility in determining when amplification is required and the quantity and type of amplification necessary to maintain acceptable optical levels.

(4) A high-speed (pass-through) interface is a device placed at a mutually agreed upon fiber-meet location where interconnection between the facilities of the Telephone Company and those of the customer or of a third party provider occurs. The high-speed (pass-through) interface will not be utilized when such interconnection occurs within a Telephone Company CO (for which a node or amplification device and fiber cross-connects apply) or at a customer's designated premises for which interconnection via a node occurs. Connection to other Telephone Company services is prohibited at locations utilizing a high-speed (pass-through) interface.

Service availability limited. Refer to # footnote on Page 7-117.

© 2022 Frontier Communications Parent, Inc. All rights reserved

7. Special Access Service (Cont'd)

7.2 Service Descriptions (Cont'd)

7.2.14 Dedicated SONET Services (Cont'd)

(C) Service Descriptions (Cont'd)

(4) Dedicated SONET Optical Transport Service (DSOTS)# (Cont'd)

(c) Service Components (Cont'd)

(5) Optical transport channels allow for optical services to be multiplexed on to or off of the DSOTS ring at locations equipped with a DSOTS node. An optical interface at the node allows for connection of the applicable protocol to the customer's equipment.

Optical transport channels are provided on a node-to-node (i.e., point-to-point) basis or between a location equipped with a DSOTS node and a fiber-meet location. These channels are provided on a point-to-fiber-meet basis. When a channel that originates at and terminates to devices which are not within the partial ring, the Telephone Company must map that channel through the partial ring to ensure continuity of the signal over the jointly provided ring. A Channel Mapping nonrecurring charge as set forth in Section 7.5.24(G) following applies in lieu of the rates and charges for a point-to-point or point-to-fiber-meet transport channel.

Optical Transport Channels are available on a protected or unprotected basis depending on the protocol being transmitted and the level of redundancy required for the optical channel. These channels may be ordered using a single-port interface (each a single channel per interface card) or using a multi-port interface. A multi-port interface is a facility capable of supporting up to 4 multi-port channels of ESCON, Fibre Channel, FDDI, Fast Ethernet, D1 Video, or any combination of these multi-port channels. A multi-port optical transport channel provides a two-point facility over the DSOTS ring for the purpose of aggregating multiple optical channels over a single wavelength.

Some protocols have facility distance limitations and may affect the design or availability of the DSOTS ring or its optical transport channels. The multi-port interface is provided with a short reach, 2-fiber interface with a 1310nm signal.

A protected optical channel allows for a single signal from the customer to be duplicated and sent over separate diverse routes (working and protect) within the DSOTS network.

An unprotected optical channel provides minimum protection of the signal from the customer. End-to-end protection is provided by the protection inherent in the connecting service provided by the Telephone Company (e.g., DSR), as applicable.

Optical transport channels are delivered over a single-port interface or multi-port interface unless otherwise specified. The use of a multi-port interface and the type of optical transport channels that can be provided over a single-port or multi-port interface are subject to the availability of suitable equipment to provide the requested service.

Service availability limited. Refer to # footnote on Page 7-117.

© 2022 Frontier Communications Parent, Inc. All rights reserved

7. Special Access Service (Cont'd)

7.2 Service Descriptions (Cont'd)

7.2.14 Dedicated SONET Services (Cont'd)

(C) Service Descriptions (Cont'd)

(4) Dedicated SONET Optical Transport Service (DSOTS)# (Cont'd)

(c) Service Components (Cont'd)

(5) (Cont'd)

All signals generated by customer provided equipment and delivered to the Telephone Company for multiplexing on to DSOTS must meet industry standards and specifications for the underlying protocol. The customer is responsible to perform any error detection and error correction of the data generated by its equipment. The Telephone Company assumes no responsibility for the quality of the signal generated by the customer or any customer provided equipment and will deliver the signal to the receiving location in the same format and condition as generated by the customer.

The Telephone Company will transmit the following protocols over DSOTS optical transport channels:

SONET OC3 – for transmission of 155.52 Mbps synchronous optical data transmission capability. SONET OC3 is delivered over a single-port interface only.

SONET OC3c – for transmission of concatenated 155.52 Mbps synchronous optical data transmission capability. SONET OC3c is delivered over a single-port interface only.

SONET OC12 – for transmission of 622.08 Mbps synchronous optical data transmission capability. SONET OC12 is delivered over a single-port interface only.

SONET OC12c – for transmission of concatenated 622.08 Mbps synchronous optical data transmission capability. SONET OC12c is delivered over a single-port interface only.

SONET OC48 – for transmission of 2.488 Gbps synchronous optical data transmission capability. SONET OC48 is delivered over a single-port interface only.

SONET OC48c – for transmission of concatenated 2.488 Gbps synchronous optical data transmission capability. SONET OC48c is delivered over a single-port interface only.

Service availability limited. Refer to # footnote on Page 7-117.

© 2022 Frontier Communications Parent, Inc. All rights reserved

7. Special Access Service (Cont'd)

7.2 Service Descriptions (Cont'd)

7.2.14 Dedicated SONET Services (Cont'd)

(C) Service Descriptions (Cont'd)

(4) Dedicated SONET Optical Transport Service (DSOTS)# (Cont'd)

(c) Service Components (Cont'd)

(5) (Cont'd)

SONET OC192 – for transmission of 9.953 Gbps synchronous optical data transmission capability. SONET OC192 is delivered over a single-port interface only.

SONET OC192c – for transmission of concatenated 9.953 Gbps synchronous optical data transmission capability. SONET OC192c is delivered over a single-port interface only.

10 Gigabit Ethernet LAN-PHY – 10GBASE-R (LAN PHY) interfaces offer an effective line rate of 10.3125 Gbps (10 Gbps of data traffic encoded in a 64B/66B protocol compared to the traditional 8B/10B protocol of Gigabit Ethernet).0 Gigabit Ethernet LAN-PHY is delivered over a single-port interface only.

10 Gigabit Ethernet WAN-PHY – 10GigE data rate and format compatible with the SONET OC192c transmission format defined by ANSI.0 Gigabit Ethernet WAN-PHY is delivered over a single-port interface only.

ESCON* – for transmission of one 200 Mbps Enterprise Service CONnection channels between the same two DSOTS nodes used for computer-to-computer data exchange. An ESCON signal is limited to a maximum distance of 43km (physical route kilometers) between the locations involved. ESCON is delivered over a multi-port interface only.

FICON* – for transmission of 1 Gbps and 2 Gbps Fibre CONnection among mainframes, storage devices and peripherals on a single channel. A FICON signal is limited to a maximum distance of 100km (physical route kilometers) between the locations involved. FICON is delivered over a single-port interface only.

Fibre Channel* – for transmission of 2.125 Gbps, 1.0625 Gbps, 531 Mbps, 266 Mbps, and 133 Mbps signals in a serial link between supercomputers, mainframes, workstations, desktop computers, storage devices, displays and other peripherals. A Fibre Channel signal is limited to a maximum distance of 100km (physical route kilometers) between the locations involved. Fibre Channel signals at transmission speeds of 2.125 Gbps, 1.0625 Gbps, 531 Mbps, 266 Mbps, and 133 Mbps are delivered over a single-port interface. Fibre Channel signals at transmission speeds of 266 Mbps and 133 Mbps may also be delivered over a multi-port interface.

* Denotes a data optical transport channel.

Service availability limited. Refer to # footnote on Page 7-117.

© 2022 Frontier Communications Parent, Inc. All rights reserved

7. Special Access Service (Cont'd)

7.2 Service Descriptions (Cont'd)

7.2.14 Dedicated SONET Services (Cont'd)

(C) Service Descriptions (Cont'd)

(4) Dedicated SONET Optical Transport Service (DSOTS)# (Cont'd)

(c) Service Components (Cont'd)

(5) (Cont'd)

ETR/CLO* – a channel for transmission of an 8 Mbps External Timing Reference/Control Link Oscillator signal for distributing time-of-day information to all central processing units in the Sysplex and to keep the Sysplex timer units synchronized with each other. An ETR/CLO signal is limited to a maximum distance of 40km (physical route kilometers) between the locations involved. ETR/CLO is delivered over a single-port interface only.

FDDI* – for transmission of 100 Mbps Fiber Distributed Data Interface channels for general purpose interconnection between computers and peripheral equipment, including interconnection of Local Area Networks and other networks. FDDI is delivered over a single-port or multi-port interface.

ISC* – for transmission of 1.06 Gbps Intersystem Channel for data caching, locking and queuing services between coupling facility and a central processing unit. An ISC signal is limited to a maximum distance of 40km (physical route kilometers) between the locations involved. ISC is delivered over a single-port interface only.

ISC3* – for transmission of 2.125 Gbps Intersystem Channel for data caching, locking and queuing services between coupling facility and a central processing unit. An ISC3 signal is limited to a maximum distance of 100km (physical route kilometers) between the locations involved. ISC3 is delivered over a single-port interface only.

Fast Ethernet* – for 100 Mbps transmission of Ethernet. Fast Ethernet is delivered over a single-port or multi-port interface.

Gigabit Ethernet* – for 1.0 Gbps transmission of Ethernet. Gigabit Ethernet is delivered over a single-port interface only.

D1 Video* – for uncompressed digital transmission of video signals operating at 270 Mbps. D1 Video is delivered over a single-port or multi-port interface.

* Denotes a data optical transport channel.

Service availability limited. Refer to # footnote on Page 7-117.

© 2022 Frontier Communications Parent, Inc. All rights reserved

7. Special Access Service (Cont'd)

7.2 Service Descriptions (Cont'd)

7.2.14 Dedicated SONET Services (Cont'd)

(C) Service Descriptions (Cont'd)

(4) Dedicated SONET Optical Transport Service (DSOTS)# (Cont'd)

(c) Service Components (Cont'd)

(5) (Cont'd)

The technical specifications for the protocols transmitted over DSOTS optical transport channels are delineated in the following technical publications:

Protocol Transmitted	Technical Publication
SONET OC3, OC12, OC48	GR-253-CORE, Issue 4
SONET OC3c, OC12c, OC48c	GR-253-CORE, Issue 4
SONET OC192, OC192c	GR-253-CORE, Issue 4
10 Gigabit Ethernet WAN-PHY	IEEE 802.3ae-2002 with WAN Interface Sublayer
10 Gigabit Ethernet LAN-PHY	IEEE 802.3ae-2002 with LAN Interface Sublayer
ESCON, FICON	IBM Publication SA23-0394-06 (Seventh Edition) IBM Publication GA23-0367-12 (thirteenth Edition) ANSI INCITS 296-1997 (R2007)
ISC	IBM Publication SG24-5638-00
ISC3	IBM Publication SA23-0395-05
ETR/CLO	IBM Publication sg24-2070-00

© 2022 Frontier Communications Parent, Inc. All rights reserved

7. Special Access Service (Cont'd)

7.2 Service Descriptions (Cont'd)

7.2.14 Dedicated SONET Services (Cont'd)

(C) Service Descriptions (Cont'd)

(4) Dedicated SONET Optical Transport Service (DSOTS)# (Cont'd)

(c) Service Components (Cont'd)

(5) (Cont'd)

Protocol Transmitted	Technical Publication
Fibre Channel	ANSI INCITS 303-1998 (R2003)
FDDI	IEEE 802.3u-1995 ANSI INCITS166-1989 (R2005) ANSI INCITS 148-1988 (R2004)
Fast Ethernet	IEEE 802.3-2005/Cor2/D2.0-2007 IEEE 802.3z-1998
Gigabit Ethernet	IEEE 802.3-2005/Cor2/D2.0-2007 IEEE 802.3z-1998
D1 Video	SMPTE 0259M-2008

Service availability limited. Refer to # footnote on Page 7-117.

© 2022 Frontier Communications Parent, Inc. All rights reserved

7. Special Access Service (Cont'd)

7.2 Service Descriptions (Cont'd)

7.2.14 Dedicated SONET Services (Cont'd)

(C) Service Descriptions (Cont'd)

(4) Dedicated SONET Optical Transport Service (DSOTS)# (Cont'd)

(c) Service Components (Cont'd)

(6) An example of an DSOTS Full Ring is diagrammed below:

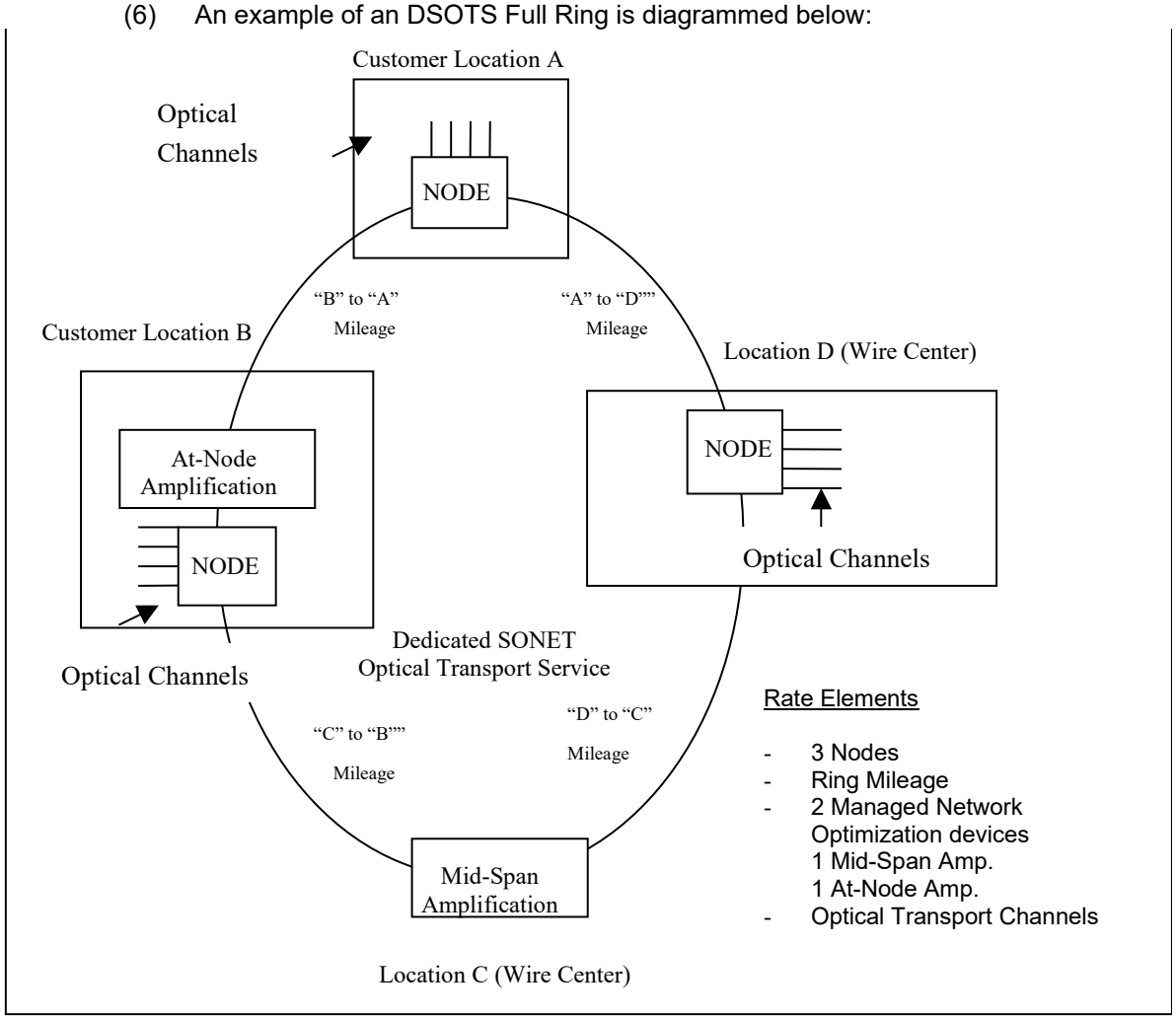

Service availability limited. Refer to # footnote on Page 7-117.

© 2022 Frontier Communications Parent, Inc. All rights reserved

7. Special Access Service (Cont'd)

7.2 Service Descriptions (Cont'd)

7.2.14 Dedicated SONET Services (Cont'd)

(C) Service Descriptions (Cont'd)

(4) Dedicated SONET Optical Transport Service (DSOTS)# (Cont'd)

(c) Service Components (Cont'd)

(7) An example of an DSOTS Partial Ring is diagrammed below:

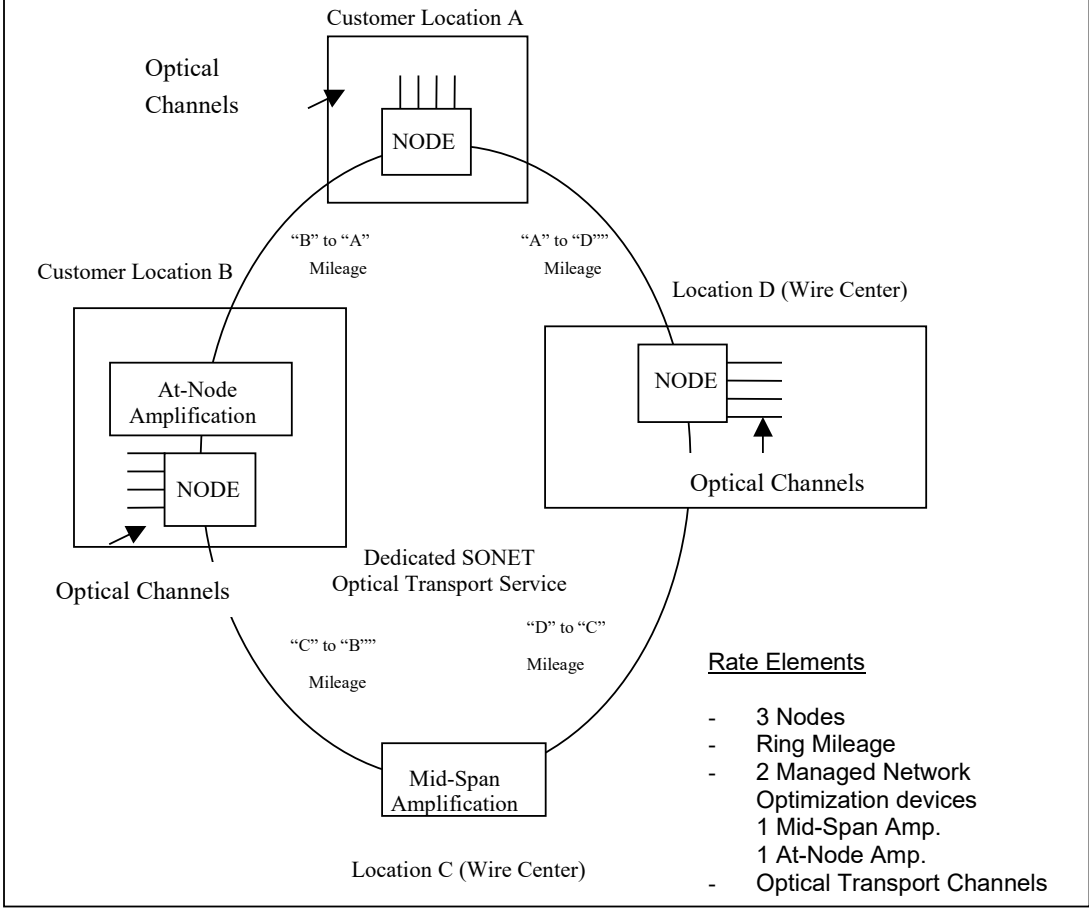

Service availability limited. Refer to # footnote on Page 7-117.

© 2022 Frontier Communications Parent, Inc. All rights reserved

7. Special Access Service (Cont'd)

7.2 Service Descriptions (Cont'd)

7.2.14 Dedicated SONET Services (Cont'd)

(C) Service Descriptions (Cont'd)

(4) Dedicated SONET Optical Transport Service (DSOTS)# (Cont'd)

Application of Rates and Charges

(1) DSOTS is available for 3, 5 and 7 year commitment periods for the nodes, ring mileage, network optimization at-node amplification (subject to (C)(4) (11) following), network optimization mid-span amplification, partial ring high-speed (pass-through) interfaces, and optical transport channels.

(2) Nodes, network optimization mid-span amplification, and SONET optical transport channels added subsequent to the initial installation may be coterminous to the expiration date of the DSOTS at the rates and charges specified for the term plan on the existing DSOTS or may require an extension to the existing plan as follows. If the addition is prior to the 21st month for an existing 3-year plan, prior to the 36th month for an existing 5-year plan, or prior to the 50th month for an existing 7-year plan, the addition will be coterminous to the expiration date of the DSOTS. If the addition is after the aforementioned periods, the customer must extend the commitment period of its existing plan for an additional one-year for a 3-year plan, an additional 2-years for a 5-year plan, or an additional 3-years for a 7-year plan.

(3) Effective August 16, 2005, separate rates and charges for network optimization at-node amplification apply subject to (C)(4) (11) following.

(4) Termination liability for DSBT is described in Section 8.2(C) following. Termination liability for DSR is set forth in Section 23.1 following.

(5) Data optical transport channels added subsequent to the initial installation will be coterminous to the expiration date of the DSOTS at the rates and charges specified for the term plan on the existing DSOTS. These channels are subject to a minimum service period of three months. Data optical transport channels are available in (C)(4)(c)(5) preceding.

(6) The addition of SONET and/or Data optical transport channels subsequent to the initial installation of service may also require the addition of an expansion node(s) and/or network optimization device(s) to accommodate the increase in channels. The addition of an expansion node or network optimization is subject to the conditions set forth above.

Service availability limited. Refer to # footnote on Page 7-117.

© 2022 Frontier Communications Parent, Inc. All rights reserved

7. Special Access Service (Cont'd)

7.2 Service Descriptions (Cont'd)

7.2.14 Dedicated SONET Services (Cont'd)

(C) Service Descriptions (Cont'd)

(4) Dedicated SONET Optical Transport Service (DSOTS)# (Cont'd)

Application of Rates and Charges (Cont'd)

(7) Monthly recurring rates apply for the nodes, ring mileage, network optimization mid-span amplification, network optimization at-node amplification subject to (C)(4) (11) following, partial ring high-speed (pass-through) interfaces (certain partial ring configurations only), and optical transport channels. The monthly rate for a point-to-point optical transport channel applies for the entire node-to-node connection. The monthly rate for a point-to-fiber meet optical transport channel applies for the entire node to fiber meet (collocation arrangement in a CO, customer premises or mutually agreed upon location, as applicable) connection. Once a term period expires, the prevailing rates of the current plan will continue at Category I or Category II rates, as determined in (C)(4) (11) following, until the customer cancels service or requests a new term plan.

(8) The rates and charges for optical transport channels delivered over a single-port or multi-port interface are set forth in 7.5.24 following. When the optical transport channel is provided with a multi-port interface, rates and charges apply for the multi-port facility and for each multi-port channel riding the multi-port facility.

(9) Nonrecurring charges for DSOTS apply for the initial installation of service and for any subsequent node, network optimization mid-span amplification, or optical transport channel that is added at any time after the initial installation of service. A nonrecurring charge also applies to upgrade a 4 channel primary node to a 16 channel primary node or a 4 channel expansion node to a 16 channel expansion node.

(10) Additionally, a Channel Mapping nonrecurring charge as set forth in Section 7.5.24(G) following applies for each channel which the Telephone Company must map over the partial ring. Only channels that originate at and terminate to devices that are not within the partial ring require mapping.

Service availability limited. Refer to # footnote on Page 7-117.

© 2022 Frontier Communications Parent, Inc. All rights reserved

7. Special Access Service (Cont'd)

7.2 Service Descriptions (Cont'd)

7.2.14 Dedicated SONET Services (Cont'd)

(C) Service Descriptions (Cont'd)

(4) Dedicated SONET Optical Transport Service (DSOTS)# (Cont'd)

Application of Rates and Charges (Cont'd)

(11) Rates and charges for DSOTS nodes, ring mileage, network optimization at-node amplification, network optimization mid-span amplification, high speed pass-through interfaces, and optical transport channels which are in-service as of, or ordered prior to, are subject to Category I rates, unless the customer has converted from Category II rates under (C)(4) (11)(c) following.

Rates and charges for DSOTS nodes, ring mileage, network optimization mid-span amplification, high speed pass-through interfaces, and optical transport channels which are ordered on or after August 16, 2005 are subject to Category II rates. Category II rates also apply to DSOTS which are converted to Category I under (C)(4) (11)(c) following.

(a) Category I rates are grandfathered as of August 16, 2005 and apply to DSOTS that is in-service as of, or ordered prior to, August 16, 2005 under Section 6.8.25(C)(6) preceding, or under this Section 7.2.14(C)(4); unless the customer elects to convert DSOTS billing to Category II rates in accordance with (C)(4) (11)(c) following. Category I rates include separate rates and charges for network optimization at-node amplification.

(b) Category II rates apply to each DSOTS which is ordered on or after August 16, 2005 under Section 6.8.25(C)(6) or under this Section 7.2.14(C)(4) following. Category II rates also apply to nodes, network optimization, mileage, and optical transport channels which are ordered on or after August 16, 2005 as an addition to an existing DSOTS, regardless of whether or not such existing DSOTS is subject to Category I or Category II rates. When the Telephone Company's network design for such addition to an existing DSOTS requires that a network optimization at-node amplifier be added to an existing node that is billed at Category I rates, the billing for such node will be converted to the Category II node rate element, which node rate element includes amplification at the node.

Category II rates also apply to DSOTS that are converted from Category I rates to Category II rates in accordance with (C)(4) (11)(c) following. Category II rates do not include separate rates and charges for network optimization at-node amplification which is provided as part of the node rate element on or after August 16, 2005.

Service availability limited. Refer to # footnote on Page 7-117.

© 2022 Frontier Communications Parent, Inc. All rights reserved

7. Special Access Service (Cont'd)

7.2 Service Descriptions (Cont'd)

7.2.14 Dedicated SONET Services (Cont'd)

(C) Service Descriptions (Cont'd)

(4) Dedicated SONET Optical Transport Service (DSOTS)# (Cont'd)

Application of Rates and Charges (Cont'd)

(11) (Cont'd)

(c) A customer subject to Category I rates under (C)(4) (11)(a) preceding may convert to Category II rates subject to the following:

(1) The customer must submit an access order for the conversion to Category II rates.

(2) Separate rates and charges applicable to network optimization at-node amplification under Category I rates shall cease coincident with the date that billing at Category II rates commences.

(3) A new commitment period commences with the conversion from Category I rates to Category II rates. The customer must select a new commitment period from those offered under (1) preceding. The new commitment period must be equal to, or longer than, the original commitment period for the DSOTS that was subject to the Category I rates. For example, an DSOTS under a 5-year commitment period at Category I rates may only convert to a new 5-year commitment period or a new 7-year commitment period upon conversion to Category II rates.

(4) There can be no physical work activity (e.g., moves, additions, changes) associated with the conversion to Category II rates. Upon conversion, all terms and conditions of this Guide shall apply to the converted DSOTS service, including any applicable termination liability and minimum period obligations.

(5) When the conversion is ordered between the period beginning August 16, 2005 and ending November 16, 2005, the conversion will not be subject to minimum period and/or termination liability as they may otherwise apply for early termination of the Category I term plan, provided that the conditions set forth in (1) through (4) preceding are met.

Conversion from Category I rates to Category II rates that is ordered after November 16, 2005 is subject to all minimum period and/or termination liability as they apply for early termination of the Category I term plan. Additionally, conversion to Category II rates ordered after November 16, 2005 is subject to the requirements set forth in (1) through (4) preceding.

Service availability limited. Refer to # footnote on Page 7-117.

© 2022 Frontier Communications Parent, Inc. All rights reserved

7. Special Access Service (Cont'd)

7.2 Service Descriptions (Cont'd)

7.2.14 Dedicated SONET Services (Cont'd)

(C) Service Descriptions (Cont'd)

(4) Dedicated SONET Optical Transport Service (DSOTS)# (Cont'd)

Application of Rates and Charges (Cont'd)

(12) A change in the type (e.g., Fiber Channel to FICON) or optical carrier rate (e.g., OC3 to OC12) of optical transport channel is treated as a discontinuance of the existing channel and an installation of a new optical transport channel. Optical transport channels ordered on or after August 16, 2005 are provided at Category II rates.

(13) When an optical transport channel is ordered to connect with DSR or DSBT, the optical channel will be billed to the DSR or DSBT customer, as applicable.

(14) When an optical transport channel is delivered over a multi-port interface, the multi-port facility and each multi-port channel riding the multi-port facility must be billed to the same customer who subscribes to the DSOTS ring.

(15) When an optical transport channel is ordered to connect to a Telephone Company provided dedicated SONET ring or a Telephone Company provided point-to-point SONET service, the optical channel will be billed to the dedicated SONET ring or point-to-point SONET service customer, as applicable.

Service availability limited. Refer to # footnote on Page 7-117.

© 2022 Frontier Communications Parent, Inc. All rights reserved

7. Special Access Service (Cont'd)

7.2 Service Descriptions (Cont'd)

7.2.14 Dedicated SONET Services (Cont'd)

(C) Service Descriptions (Cont'd)

(4) Dedicated SONET Optical Transport Service (DSOTS)# (Cont'd)

(e) Termination Liability

(1) Termination liability applies to DSOTS and is charged per monthly rate element on all nodes, network optimization, partial ring high-speed (pass-through) interfaces, optical transport channels and network management methods. Termination liability for DSBT is described in Section 8.2(C) following. Termination liability for DSR is set forth in Section 23.1 following. Data optical transport channels as set forth in Section 7.2.14(C)(4) preceding are not subject to termination liability, however, such channels are subject to a minimum service period of three-months.

A separate termination liability charge is assessed for each rate element associated with the disconnected DSOTS or a Network Management Method. For example, assume that the customer subscribes to an DSOTS ring that is arranged with the Direct TL1 Monitoring Optional Feature, as set forth in 7.2.14(C)(4)(k)(2) following. Further, assume that the customer disconnects the DSOTS ring along with the Direct TL1 Monitoring Optional Feature prior to the end of the commitment period. Then, the customer shall pay termination liability on the nodes, network optimization, partial ring high-speed interfaces, optical transport channels and the Direct TL1 Monitoring Optional Feature monthly recurring rate elements as set forth in this section.

(2) Reserved For Future Use. (C)

(3) Termination liability will not apply on any DSOTS service or Network Management Method if (1) a customer changes its term plan to a longer commitment period; (2) a 4 channel primary node is upgraded to a 16 channel primary node; (3) a 4 channel expansion node is upgraded to a 16 channel expansion node; or (4) a term plan subject to Category I rates is converted to a new term plan subject to Category II rates, when such conversion satisfies the conditions in (C)(4) (11)(c) preceding and is ordered on or before November 16, 2005.

(4) Termination liability will apply when the conditions above are not met and the customer cancels service prior to expiration of the plan period. If the cancellation occurs within the first two years of a term plan, termination liability is equal to 100 percent (100%) of the monthly charges for the unexpired portion of the first two years, and 25 percent (25%) of the monthly charges for the remainder of the plan. If the customer cancels after the first two years of service, then termination liability is equal to 25 percent (25%) of the monthly charges for the remaining life of the term.

Service availability limited. Refer to # footnote on Page 7-117.

© 2024 Frontier Communications Parent, Inc. All rights reserved

7. Special Access Service (Cont'd)

7.2 Service Descriptions (Cont'd)

7.2.14 Dedicated SONET Services (Cont'd)

(C) Service Descriptions (Cont'd)

(4) Dedicated SONET Optical Transport Service (DSOTS)# (Cont'd)

(e) Termination Liability (Cont'd)

(5) For Dedicated SONET Optical Transport Service with a commitment period which was extended under (i) following, termination liability is calculated as the difference between the monthly rates for the highest Term Pricing Plan commitment period that could have been satisfied prior to disconnection of the service or cancellation of the plan and the monthly rates already paid for the expired commitment period and the extended commitment period for the period of time the service was in effect.

(f) Conversions

(1) Customers who wish to move or convert existing Special Access DSR or High Capacity Special Access services to DSOTS may do so without conversion charges (termination liability and installation charges) as long as the total capacity of Special Access services or DSR purchased by the customer does not decrease.

(2) Customers who wish to convert existing DSOTS under a term plan with Category I rates to a new term plan with Category II rates may do so without conversion charges (minimum period obligations, termination liability, and installation charges) as long as the requirements set forth in (C)(4) (11)(c) are met and is ordered on or before November 16, 2005.

(g) Deployment and Availability

Since DSOTS is a dedicated high capacity customized network, it is deployed upon customer request. Where suitable facilities are not generally available, rates and charges as set forth in Interstate Special Construction Tariffs may apply.

DSOTS is available based on negotiated intervals as described in 5.2.1(B) preceding.

(h) Shared Use

The regulations applicable to the shared use of DSOTS are set forth in Section 7.4.8 following. Switched Access DSOTS is described in Section 6.8.25(C)(6) preceding. Shared Use and Switched Access Services are prohibited on DSOTS partial ring configurations.

Service availability limited. Refer to # footnote on Page 7-117.

© 2022 Frontier Communications Parent, Inc. All rights reserved

7. Special Access Service (Cont'd)

7.2 Service Descriptions (Cont'd)

7.2.14 Dedicated SONET Services (Cont'd)

(C) Service Descriptions (Cont'd)

(4) Dedicated SONET Optical Transport Service (DSOTS)# (Cont'd)

(i) Extension of a Commitment Period

(1) The customer has the option, within sixty (60) days prior to the expiration date for its commitment period, to extend its expiring Term Pricing Plan to a plan with a longer commitment period, for which time-in-service credit will be allowed for the expiring plan. The commitment period selected for the extended plan must be longer that the commitment period of the expiring plan as follows:

- An expiring 3-Year Term may be extended to either a 5-Year or 7-Year Term Plan.
- An expiring 5-Year Term may be extended to a 7-Year Term Plan.

(2) Time-in-service credit on the expiring plan will be granted and applied towards the new extended plan. For example, an expiring 3-Year term plan will allow for 3 years of time-in-service credit towards the extended plan.

(3) A Category I term plan that is converted under (C)(4) (11)(c) preceding to a Category II term plan is not eligible for time-in-service credit on the Category II term plan.

(4) The customer may also extend the commitment period in order to install additional nodes, network optimization devices or SONET optical channels as described in (C)(4) (11) preceding.

(5) The rate for the longer commitment period will apply effective with the first bill day following expiration of the commitment period for the existing plan and continue through the remainder of the commitment period associated with the extended plan. No adjustment for the increased discount associated with the extended plan will be made to the monthly rates already billed on the expiring plan.

(6) Extension of a term pricing plan under Category I rates will be extended at Category I rates. However, nodes, network optimization, ring mileage, and optical transport channels added during the period of extension are subject to Category II rates unless otherwise specified.

(7) Extension of a term pricing plan under Category II rates will be extended at Category II rates.

Service availability limited. Refer to # footnote on Page 7-117.

© 2022 Frontier Communications Parent, Inc. All rights reserved

7. Special Access Service (Cont'd)

7.2 Service Descriptions (Cont'd)

7.2.14 Dedicated SONET Services (Cont'd)

(C) Service Descriptions (Cont'd)

(4) Dedicated SONET Optical Transport Service (DSOTS)# (Cont'd)

(j) Channel Interface Codes

The following channel interface code is used for the DSOTS ring:

CI
02FMF.004 or 02FMF.016

The following channel interface codes are use for channels using wavelengths on the DSOTS ring:

Point-to-Point (Full Ring or Partial Ring)
02FCF.10C (FDDI SM 125 Mbps)
02FCF.10D (FDDI MM 125 Mbps)
02FCF.15 (SONET OC3/OC3c)
02FCF.25 (SONET OC48/OC48c)
02FCF.62 (SONET OC12/OC12c)
02SOF.B, D, F (SONET OC192/OC192c)
02FCF.CCS (ESCON)
02FCF.CTS (ETR/CLO)
02FCF.FC (1.0625 Gbps Fibre Channel)
02OPF.A0+ (2.125 Gbps Fibre Channel)
02FCF.FC1 (133 Mbps Fibre Channel)
02FCF.FC2 (266 Mbps Fibre Channel)
02FCF.FC5 (531 Mbps Fibre Channel)
02FCF. FC(1 Gbps FICON)
02OPF.A0+ (2 Gbps FICON)
02FCF.GIS (ISC)
02OPF.A0+ (ISC3 at 2.125 Gbps)
02FMF.S (DWDM 4-Port 1.25 Gbps)
02LNF.100 (Fast Ethernet)
02LNF.1GE (Gigabit Ethernet)
02LNF.A0+ (10 Gigabit Ethernet WAN-PHY)
02LNF.A0+ (10 Gigabit Ethernet LAN-PHY)
02TD6.E (D1 Video)

Service availability limited. Refer to # footnote on Page 7-117.

© 2022 Frontier Communications Parent, Inc. All rights reserved

7. Special Access Service (Cont'd)

7.2 Service Descriptions (Cont'd)

7.2.14 Dedicated SONET Services (Cont'd)

(C) Service Descriptions (Cont'd)

(4) Dedicated SONET Optical Transport Service (DSOTS)# (Cont'd)

(j) Channel Interface Codes (Cont'd)

Point-to-Fiber Meet (Partial Ring only)
02FCF.10C (FDDI SM 125 Mbps)
02FCF.10D (FDDI MM 125 Mbps)
02FCF.15 (SONET OC3/OC3c)
02FCF.25 (SONET OC48/OC48c)
02FCF.62 (SONET OC12/OC12c)
02SOF.B, D, F (SONET OC192/OC192c)
02FCF.CCS (ESCON)
02FCF.CTS (ETR/CLO)
02FCF.FC (1.0625 Gbps Fibre Channel)
02OPF.A0+ (2.125 Gbps Fibre Channel)
02FCF.FC1 (133 Mbps Fibre Channel)
02FCF.FC2 (266 Mbps Fibre Channel)
02FCF.FC5 (531 Mbps Fibre Channel)
02FCF.GFM (1 Gbps FICON)
02OPF.A0+ (2 Gbps FICON)
02FCF.GIS (ISC)
02OPF.A0+ (ISC3 at 2.125 Gbps)
02FMF.S (DWDM 4-Port 1.25 Gbps)
02LNF.100 (Fast Ethernet)
02LNF.1GE (Gigabit Ethernet)
02LNF.A0+ (10 Gigabit Ethernet WAN-PHY)
02LNF.A0+ (10 Gigabit Ethernet LAN-PHY)
02FCF.xx (10G WAN-PHY)
02TD6.E (D1 Video)

Service availability limited. Refer to # footnote on Page 7-117.

© 2022 Frontier Communications Parent, Inc. All rights reserved

7. Special Access Service (Cont'd)

7.2 Service Descriptions (Cont'd)

7.2.14 Dedicated SONET Services (Cont'd)

(C) Service Descriptions (Cont'd)

(4) Dedicated SONET Optical Transport Service (DSOTS)# (Cont'd)

(k) Network Management Methods

The customer has the option of purchasing one of the following Network Management Methods for use with a DSOTS Special Access service provided by the Telephone Company in accordance with this Section 7.2.14. Only one method may be provided on a single DSOTS. Network Management Methods will be available subject to compatibility of the current release of the Network Management Methods software with the DSOTS equipment deployed for the customer's network.

- Customer Service Management Optional Feature, as set forth in 7.2.14(C)(4)(k)(1) following
- Direct TL1 Monitoring Optional Feature, as set forth in 7.2.14(C)(4)(k)(2) following

(1) Customer Service Management Optional Feature (CSM)

(a) Description

CSM provides a customer with real-time information about the operational status of its DSOTS network. CSM provides a network view of real-time detection and reporting of network alarm conditions within the customer's DSOTS network. In addition, CSM provides the customer with the ability to generate basic network performance reports for its DSOTS network. The customer may also request network performance reports that are customized to meet their specific needs.

(b) Application of Rates and Charges

(i) A CSM monthly recurring charge applies, per full or partial ring, for each DSOTS provided with the CSM optional feature.
(ii) A Node Setup charge applies, per primary or expansion node, for each node that is equipped with CSM at the time that CSM is initially established on the DSOTS.
(iii) An Initial CSM Setup charge applies for establishment of the customer's initial CSM database partition. The initial CSM database partition includes setup for up to six (6) users.

Service availability limited. Refer to # footnote on Page 7-117.

© 2022 Frontier Communications Parent, Inc. All rights reserved

7. Special Access Service (Cont'd)

7.2 Service Descriptions (Cont'd)

7.2.14 Dedicated SONET Services (Cont'd)

(C) Service Descriptions (Cont'd)

(4) Dedicated SONET Optical Transport Service (DSOTS)# (Cont'd)

(k) Network Management Methods (Cont'd)

(1) Customer Service Management Optional Feature (CSM) (Cont'd)

(b) Application of Rates and Charges (Cont'd)

(iv) A Setup of Additional Users charge applies for the setup of up to six (6) additional users beyond those users included with the setup of initial or additional database partitions.

(v) A Setup of Additional Partition charge applies for the setup of an additional CSM database partition created for the same customer. Each additional CSM database partition provides for the setup of up to six (6) additional users.

(vi) An Add/Remove Node charge applies, per primary and expansion node, for each node that is added to, or removed from, a DSOTS ring equipped with CSM subsequent to the initial establishment of CSM.

(vii) A Consultation and Support charge applies for each thirty (30) minutes or fraction thereof that the customer requests Telephone Company consultation and support of its CSM network. This charge does not apply during initial setup of CSM.

(viii) A Change in Network Management Method charge applies, per primary and expansion node, when the customer requests a change in Network Management Method (e.g., from CSM to DTM).

(c) Rate Regulations

(i) CSM is provided under a term plan of 3 years, 5 years or 7 years, as described following.

- The duration of the term plan for CSM must be the same duration as the term plan for the DSOTS nodes provided with CSM. At the expiration of its 3, 5 or 7 year term plans for CSM, the customer has the option of extending CSM with a coterminous end date as described following.

Service availability limited. Refer to # footnote on Page 7-117.

© 2022 Frontier Communications Parent, Inc. All rights reserved

7. Special Access Service (Cont'd)

7.2 Service Descriptions (Cont'd)

7.2.14 Dedicated SONET Services (Cont'd)

(C) Service Descriptions (Cont'd)

(4) Dedicated SONET Optical Transport Service (DSOTS)# (Cont'd)

(k) Network Management Methods (Cont'd)

(1) Customer Service Management Optional Feature (CSM) (Cont'd)

(c) Rate Regulations (Cont'd)

(i) (Cont'd)

- The expiration date of each CSM added subsequent to the initial installation must be coterminous to the expiration date of the associated DSOTS, provided the addition is prior to the 21st month for a 3-year plan, prior to the 36th month for a 5-year plan, or prior to the 50th month for a 7-year plan. A CSM added after the aforementioned periods requires extension of the commitment period for the associated DSOTS in accordance with 7.2.14(C)(4)(i) preceding. Such extension results in the establishment of a new plan that includes both the DSOTS and the CSM under the same plan with the same expiration date.

(ii) The customer may retrieve basic reports containing performance-monitoring information on its DSOTS network. Basic reports are available at no additional charge to the customer. The customer may also request that a report be customized to meet its particular needs. Rates and charges for customized reports are provided on an individual case basis (ICB) only.

(iii) CSM is subject to termination liability if the service is disconnected prior to completion of the existing commitment period. The terms and conditions in 7.2.14(C)(4)(e) preceding apply to termination of CSM prior to completion of the existing commitment period. Changes in Network Management Method (e.g., from CSM to DTM) will be made without termination liability subject to the Change in Network Management Method charge set forth in (1)(b)(viii) preceding.

Service availability limited. Refer to # footnote on Page 7-117.

© 2022 Frontier Communications Parent, Inc. All rights reserved

7. Special Access Service (Cont'd)

7.2 Service Descriptions (Cont'd)

7.2.14 Dedicated SONET Services (Cont'd)

(C) Service Descriptions (Cont'd)

(4) Dedicated SONET Optical Transport Service (DSOTS)# (Cont'd)

(k) Network Management Methods (Cont'd)

(1) Customer Service Management Optional Feature (CSM) (Cont'd)

Terms and Conditions

(i) The customer must utilize Internet web access to connect its customer-provided terminal equipment to the Telephone Company's CSM management system. Access to the internet and any associated rates and charges are the responsibility of the customer. The customer is also responsible for obtaining communications software that is compatible with the software the Telephone Company utilizes to provide CSM. The Telephone Company will work cooperatively with the customer to determine compatibility of its communications software.

(ii) CSM is provided only when the Telephone Company provides all nodes on the ring.

(iii) Subject to the restrictions set forth in 7.2.14(C)(4)(k)(1)(c)(i) preceding, CSM is provided coincident with the installation of the associated DSOTS ring or may be added to an existing ring.

(2) Direct TL1 Monitoring Optional Feature (DTM)

(a) Description

DTM provides a customer with near real-time information about the operational status of its DSOTS network over a TL1 connection. A TL1 connection is a machine-to-machine communication language protocol. The connection allows a customer to monitor its DSOTS network via a limited set of executable TL1 commands in order to query alarm and performance criteria.

Service availability limited. Refer to # footnote on Page 7-117.

© 2022 Frontier Communications Parent, Inc. All rights reserved

7. Special Access Service (Cont'd)

7.2 Service Descriptions (Cont'd)

7.2.14 Dedicated SONET Services (Cont'd)

(C) Service Descriptions (Cont'd)

(4) Dedicated SONET Optical Transport Service (DSOTS)# (Cont'd)

(k) Network Management Methods (Cont'd)

(2) Direct TL1 Monitoring Optional Feature (DTM) (Cont'd)

(a) Description (Cont'd)

(i) DTM enables the following:

- Near real-time access to system-generated alarm and performance messages originating from the customer's DSOTS network elements.
- Query and response capability that enables two-way communications with the capability to poll and retrieve messages, such as command alarms and performance messages.
- Access to ring inventory information that will enable the customer to maintain its own inventory database containing network element configurations and usage records for active service channels.
- Notification that a power failure has occurred at a DSOTS network element and that the affected network element has reverted to battery backup.
- Ability to monitor the ring, as well as all service channels riding the ring.

(b) Application of Rates and Charges

(i) A DTM monthly recurring charge applies, per full or partial ring, for each DSOTS provided with the DTM optional feature.

(ii) A Node Setup charge applies, per primary or expansion node, for each node that is equipped with DTM at the time that DTM is initially established on the DSOTS.

(iii) A DTM Setup charge applies for establishment of the customer's DTM database partition.

(iv) An Add/Remove Node charge applies, per primary and expansion node, for each node that is added to, or removed from, a DSOTS ring equipped with DTM subsequent to the initial establishment of DTM.

(v) A Consultation and Support charge applies for each thirty (30) minutes or fraction thereof that the customer requests Telephone Company consultation and support of its DTM network. This charge does not apply during initial setup of DTM.

(vi) A Change in Network Management Method charge applies, per primary and expansion node, when the customer requests a change in Network Management Method (e.g., from DTM to CSM).

Service availability limited. Refer to # footnote on Page 7-117.

© 2022 Frontier Communications Parent, Inc. All rights reserved

7. Special Access Service (Cont'd)

7.2 Service Descriptions (Cont'd)

7.2.14 Dedicated SONET Services (Cont'd)

(C) Service Descriptions (Cont'd)

(4) Dedicated SONET Optical Transport Service (DSOTS)# (Cont'd)

(k) Network Management Methods (Cont'd)

(2) Direct TL1 Monitoring Optional Feature (DTM) (Cont'd)

(c) Rate Regulations

(i) DTM is provided under a term plan of 3 years, 5 years or 7 years, as described following.

- The duration of the term plan for DTM must be the same duration as the term plan for the DSOTS nodes provided with DTM. At the expiration of its 3, 5 or 7 year term plans for DTM, the customer has the option of extending DTM with a coterminous end date as described following.

- The expiration date of each DTM added subsequent to the initial installation must be coterminous to the expiration date of the associated DSOTS, provided the addition is prior to the 21st month for a 3-year plan, prior to the 36th month for a 5-year plan, or prior to the 50th month for a 7-year plan. A DTM added after the aforementioned periods requires extension of the commitment period for the associated DSOTS in accordance with 7.2.14(C)(4)(i) preceding. Such extension results in the establishment of a new plan that includes both the DSOTS and the DTM under the same plan with the same expiration date.

(ii) Termination liability will apply if DTM is removed prior to completion of the existing commitment period. The terms and conditions in 7.2.14(C)(4)(e) preceding apply to termination of DTM prior to completion of the existing commitment period. Changes in Network Management Method (e.g., from DTM to CSM) will be made without termination liability subject to the Change in Network Management Method charge set forth in (2)(b)(vi) preceding.

Service availability limited. Refer to # footnote on Page 7-117.

© 2022 Frontier Communications Parent, Inc. All rights reserved

7. Special Access Service (Cont'd)

7.2 Service Descriptions (Cont'd)

7.2.14 Dedicated SONET Services (Cont'd)

(C) Service Descriptions (Cont'd)

(4) Dedicated SONET Optical Transport Service (DSOTS)# (Cont'd)

(k) Network Management Methods (Cont'd)

(2) Direct TL1 Monitoring Optional Feature (DTM) (Cont'd)

Terms and Conditions

(i) The customer must order two (2) special access services, provided by the Telephone Company under this Section 7 or provided by another carrier, in order to ensure secure, dedicated private line access and enable full redundancy for DTM. These special access lines must originate at the customer's designated premises and terminate at a DTM site designated by the Telephone Company with the terms and conditions of this Guide. The customer is responsible for procuring any additional services that may be necessary to connect the special access service to the customer's designated premises.

(ii) When requested by the customer, and where technically feasible to do so, the Telephone Company will provide encryption capabilities on the Special Access Services used to access DTM. The Telephone Company will specify any equipment or software required to provide encryption. Obtaining such equipment or software is the responsibility of the customer. The customer is also responsible for:

- security of any equipment, servers, systems or other facilities provided by the customer and which have access to the DTM network; and
- monitoring access to the DTM service using the facilities, systems, equipment or servers provided by the customers.

(iii) DTM is only provided when the Telephone Company provides all the nodes on the ring.

Service availability limited. Refer to # footnote on Page 7-117.

© 2022 Frontier Communications Parent, Inc. All rights reserved

7. Special Access Service (Cont'd)

7.2 Service Descriptions (Cont'd)

7.2.15 Dedicated SONET Entrance Facilities (DSEF)#

Dedicated SONET Entrance Facilities, DSEF, provides customers with high capacity access between their premises and their Serving Wire Center over a self-healing SONET ring. The SONET ring will pass through the customer's serving wire center and one other wire center as determined by the Telephone Company. The customer is assured continuity of communication between the customer premises and the Serving Wire Center (SWC) even if there is a fiber facility failure between the premises and the SWC.

(A) Definitions

Add/Drop Multiplexing, (ADM): a multiplexing function that allows lower level signals to be added or dropped from an optical carrier channel.

Dedicated SONET Entrance Facilities, (DSEF): an alternative service that enhances channel termination survivability.

Dedicated SONET Service: a Telephone Company family of SONET based services that have a high level performance guarantee.

Fractional OC# Interface: a feature of DSEF that provides either an OC3 or OC12 optical network interface at the customer's premises. Fractional capacity equal to or less than the OC# level can be activated by the customer. Capacity is ordered and billed in increments of STS1, STS3, or STS12.

Effective November 21, 2017, new orders for DSEF are no longer permitted; previous elements of this plan had been grandfathered as of August 30, 2007. The Telephone Company will continue to provide DSEF pursuant to this Section 7.2.15 on any existing DSEF that is already in-service as of August 30, 2007, or on any order for DSEF that is placed with the Telephone Company prior to August 30, 2007 (collectively, Existing DSEF), subject to the following conditions: (C)

a. For any Existing DSEF that is currently subscribed to a term plan (i.e., commitment periods of 3- and 5-years), the Telephone Company will continue to provide Existing DSEF for an additional six (6) months beyond the expiration date of the customer's current commitment period, or until the customer replaces the Existing DSEF with a comparable Telephone Company provided service, or discontinues service, whichever occurs first. Orders involving additions and/or changes to Existing DSEF are not permitted after August 30, 2007.

b. For any Existing DSEF whose term plan expired prior to August 30, 2007, but the Existing DSEF continues on a month-to-month basis at prevailing rates, the Telephone Company will continue to provide the Existing DSEF until February 29, 2008, or until the customer replaces the Existing DSEF with a comparable Telephone Company provided service, or discontinues service, whichever occurs first. Orders involving additions and/or changes to such Existing DSEF are not permitted after August 30, 2007.

© 2022 Frontier Communications Parent, Inc. All rights reserved

7. Special Access Service (Cont'd)

7.2 Service Descriptions (Cont'd)

7.2.15 Dedicated SONET Entrance Facilities (DSEF)#

(A) Definitions (Cont'd)

Grooming: the aggregation of multiple DS1s at a wire center and the formatting or packaging of the services using wire center equipment so as to connect the DS1s to a VT1.5 mapped STS1 DSEF Termination.

Optical Carrier Rate, (OC#): A SONET Transmission signal/speed, line rate, or service.

OC Rate	Bandwidth Capacity
3	155.52 Mbps
12	622.08 Mbps
48	2.488 Gbps

Synchronous Optical NETwork, (SONET): an international standard for the transmission of high capacity bandwidth over optical facilities.

Synchronous Transport Signal Level, (STS1): a 51.84 Mbps signal that is the electrical equivalent of the OC1 or a DS3 with additional Mbps devoted to SONET overhead information. An STS1 can carry a DS3 or 28 DS1s when specifically formatted (Mapped). However, DS1s within a DS3 are not accessible within SONET and their performance cannot be guaranteed for this reason. These DS1s may be accessed off-ring using the DS3 to DS1 multiplexing, a High Capacity optional service. Multiple STS1s, i.e. STS3 and STS12, equal 155.52 and 662.08 Mbps respectively.

Virtual Tributary, (VT): A SONET structure designed for transport of Sub-STS1 payloads. A DS1 is mapped into the SONET format using a VT1.5 as a packaging mechanism that is internal to the SONET signal. An DSEF service with VT1.5 mapping may be comprised of Grouped VT1.5s or Separated VT1.5s.

Grouped VT1.5: each VT1.5 in the DSEF service is connected to the network at the same wire center (i.e., have the same path on the network) and have identical features, e.g. all VT1.5s have the service option Dedicated SONET Shared Dual Path.

Separated VT1.5: a VT1.5 in an DSEF service that has a path or feature different from the other VT1.5s in the DSEF service.

Service availability limited. Refer to # footnote on Page 7-149.

© 2022 Frontier Communications Parent, Inc. All rights reserved

7. Special Access Service (Cont'd)

7.2 Service Descriptions (Cont'd)

7.2.15 Dedicated SONET Entrance Facilities (DSEF)#

(B) Service Description

DSEF is provisioned over a Telephone Company self-healing SONET ring that passes through the Telephone Company wire centers and the customer's location. One of the wire centers must be the customer's SWC; the other wire center(s) is chosen by the Telephone Company.

DSEF service consists of Dedicated SONET Entrance Facilities and an Interface when applicable. Technical Specifications for DSEF service are the same as for Dedicated SONET Service; see Section 7.2.14(A).

The DSEF Termination is a rate category that provides STS1 bandwidth or at least an STS1 aggregate of bandwidth between the customer's designated premises and the SWC of that premises. It can also be provided in multiples of STS1, i.e. STS3 or STS12.

Each DSEF Termination requires the customer to specify the type of electrical or SONET optical interface.

The electrical DSEF Interface defines the type of Special Access service that is to be provided. Three electrical Interface types are available: DS1 (1.544 Mbps), DS3 (44.736 Mbps) and STS1 (51.84 Mbps). If the customer orders a DS3 or STS1 Interface, there will be one Interface per Termination; if the customer orders DS1 Interface, then up to 28 DS1 Interfaces can be accommodated per DSEF Termination.

Three optical interfaces are available: OC3 (155.52 Mbps), OC12 (622.08 Mbps), and OC48 (2.488 Gbps). The OC3 and OC12 optical interfaces are provided in a manner that allows fractional capacity to be activated in increments of STS1s. Fractional optical interface Terminations can be connected to lower speed Special Access services as well as Special Access and advanced data services that are equal to the bandwidth of the interface. DSEF provided with interfaces at STS1, OC3, and OC12 can also be connected to Ethernet Private Line STS1, OC3c, and OC12c Ethernet-to-SONET mapped services as described in 7.2.16 following.

The entire bandwidth of the OC48 interface, which is provisioned using one Company ADM at the customer’s SWC and a fiber interconnection (mid-span meet) at the customer’s designated premises, is completely committed to the customer. It operates in a terminal/linear mode with diversely routed fiber between the SWC and the customer’s premises. To ensure network security, the Data Communications Channel in the SONET overhead will be turned off. The handoff, mid-span meet-point, at the customer’s premises will be at a site mutually agreed upon that provides access to both the Company and the customer. The handoff will be a 4 fiber, 1 x 1 protection.

Service availability limited. Refer to # footnote on Page 7-149.

© 2022 Frontier Communications Parent, Inc. All rights reserved

7. Special Access Service (Cont'd)

7.2 Service Descriptions (Cont'd)

7.2.15 Dedicated SONET Entrance Facilities (DSEF)# (Cont'd)

(B) Service Description (Cont'd)

Interoffice mileage, when applicable, will apply at a DSSSP rate or at other channel mileage rates for the appropriate High Capacity or broadband service being transported over the IOF.

A DSEF service is shown below:

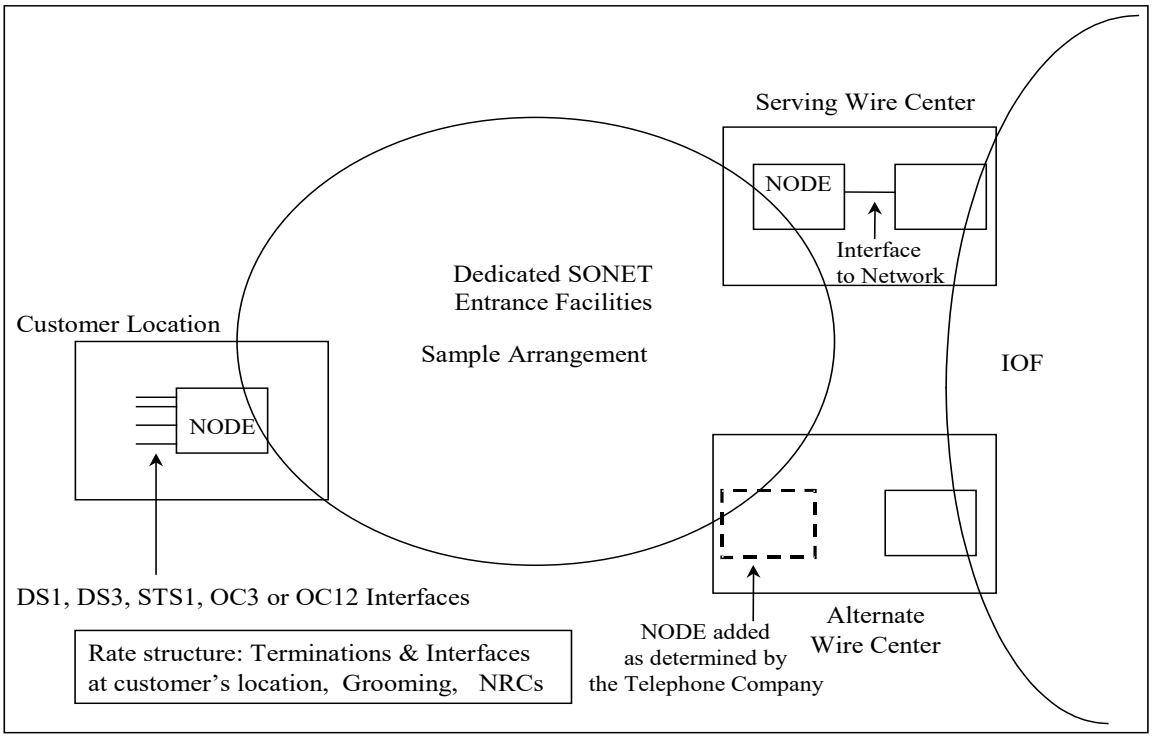

Service availability limited. Refer to # footnote on Page 7-149.

© 2022 Frontier Communications Parent, Inc. All rights reserved

7. Special Access Service (Cont'd)

7.2 Service Descriptions (Cont'd)

7.2.15 Dedicated SONET Entrance Facilities (DSEF)# (Cont'd)

(B) Service Description (Cont'd)

Each DSEF Termination can be connected to other Special Access service channel terminations or to advanced data services via the Telephone Company's interoffice facilities (IOF) and Hubs. Three STS1s or a STS3 can be connected to either an DSBT OC3 or OC3c service. Twelve STS1s or an STS12 can be connected to either an DSBT OC12 or an OC12c. Forty-eight STS1s can be connected to an DSBT OC48 service. The connecting IOF transport for OC48 will be over DS3, STS1 (VT1.5 and DS3 mapped), OC3/OC3c and OC12/OC12c. Grooming is required to aggregate DS1 services on to a DSEF Termination. Additionally, DSEF provided with interfaces at STS1, OC3 and OC12 can be connected to multiplexed DSBT services. Connection to an DSBT OC3 and OC12 multiplexing node can only occur from a DSEF OC48 arrangement.

DSEF may also be connected to the following Telephone Company provided services, provided that such connections are technically and operationally feasible, as determined by the Telephone Company:

- point-to-point SONET service
- Ethernet private line service
- dedicated SONET ring service

(C) Optional Features and Functions

Survivability from the DSEF SWC to other network service locations can be obtained through the purchase of one or two service options. Dedicated SONET Shared Dual Path (DSSDP) service is an option which provides a high level of service survivability (see Section 7.2.14(C)(2)). Another option which enhances survivability through diversity is Alternate Serving Wire Center, ASWC; see High Capacity Service Optional Features and Functions, Section 7.2.9 (7).

An optional feature known as grooming may be purchased. Grooming allows multiple DS1 circuits to be "groomed" (aggregated) at a wire center in order to be connected to a common DSEF Termination. This option requires that the DSEF Termination contain VT 1.5 (DS1) mapping.

DS1s multiplexed into DS3 occurs outside the SONET network, and requires DS3 to DS1 multiplexing at the wire center; see High Capacity Service Optional Features and Functions, Section 7.2.9 (3). DS1s mapped as VT1.5s in a DSSSP service can be demultiplexed with the optional STS1/DS1 Multiplexing feature at designated wire centers. STS1/DS1 Multiplexing is described in Section 8.2(B).

Service availability limited. Refer to # footnote on Page 7-149.

© 2022 Frontier Communications Parent, Inc. All rights reserved

7. Special Access Service (Cont'd)

7.2 Service Descriptions (Cont'd)

7.2.15 Dedicated SONET Entrance Facilities (DSEF)# (Cont'd)

Terms and Conditions

DSEF is available for 3 and 5-year commitment periods.

Once the term period expires, the rate of the expiring selected rate plan will continue until the customer cancels service or requests a new rate plan.

The customer may add additional DSEF Interfaces and Terminations to an existing DSEF service plan. However, in order to add additional Interfaces and Terminations to an existing DSEF Service plan, there must be at least 1 year remaining in the term of the commitment plan. DSEF plans with less than 1 year remaining in the commitment period will not be eligible for additional Interfaces or Terminations. Where additional Interfaces or Terminations are added subject to the criteria specified preceding, they must remain in service to the end of the commitment period of the DSEF service plan to which they are added or termination liability will apply.

Customers who order an STS1 Interface must specify how the signal is mapped, VT1.5 or DS3-mapped (see definitions for Virtual Tributary and SONET).

The Customer, when purchasing the OC48 Interface service, is solely responsible for the installation and maintenance of its SONET transmission equipment. The customer's equipment must conform to the technical standards as previously cited

Asynchronous multiplexing of DS1s into a DS3 occurs outside the SONET network and requires DS3 to DS1 Multiplexing at the existing tariff rates.

Synchronous mapping of DS1s as VT1.5s occurs inside the SONET network and requires STS1 to DS1 multiplexing at the tariffed rates.

Service is available based on negotiated intervals, as described in 5.2.1(B) preceding.

If the customer premises (i.e., interexchange carrier Point of Presence, or end user location) is located in the same building as one of the connecting wire centers, the diversity between the wire center and the customer premises may be limited by the physical paths available to connect the wire center and the premises.

Service availability limited. Refer to # footnote on Page 7-149.

© 2022 Frontier Communications Parent, Inc. All rights reserved

7. Special Access Service (Cont'd)

7.2 Service Descriptions (Cont'd)

7.2.15 Dedicated SONET Entrance Facilities (DSEF)# (Cont'd)

Terms and Conditions (Cont'd)

The customer will be billed additional charges for any charges levied the Telephone Company for space and power requirements at the customer premises to place ADMs on the Company's side of the network Interface.

DSEF service may be used in conjunction with Dedicated SONET Shared Dual Path (DSSDP), DSBT or multiplexed DSBT services, advanced data services or the Special Access High Capacity service option of Alternate Serving Wire Center, ASWC. DSEF DS1s with these features are rated depending on whether the DS1s are "Grouped" or "Separated".

DSEF service may be included in, and concurrently subscribed to a Commitment Discount Plan as specified in Section 25.1 following.

If a customer establishes a Commitment Discount Plan (CDP) for at least one (1) service type listed in Section 25.1.1 following and subscribes to other services listed in Section 25.1.1 following at any time that a CDP is in effect, the customer may not establish or maintain a term plan for any services that are eligible for inclusion in CDP with the limited exception of DSEF services as set forth in Section 25.1 following.

(E) Termination Liability

Reserved For Future Use. (C)

Service availability limited. Refer to # footnote on Page 7-149.

© 2024 Frontier Communications Parent, Inc. All rights reserved

7. Special Access Service (Cont'd)

7.2 Service Descriptions (Cont'd)

7.2.15 Dedicated SONET Entrance Facilities (DSEF)# (Cont'd)

(E) Termination Liability (Cont'd)

Termination liability will not apply for conversions to a longer term commitment period plan.

Termination liability will not apply if the customer meets the requirements for portability. Portability is the replacement of an DSEF Termination with another for the balance of the commitment period. Portability requirements are as follows:

- The replacement Termination must not already be in a term plan.
- The orders to accomplish the replacement are placed with the Telephone Company at the same time with the due dates within 90 days of each other, and are related by a related purchase order number.
- The aggregate interface quantities associated with the Termination replacement are equal to or greater than the disconnected service.
- The service may be moved to another location in the Telephone Company region, provided the service was maintained in the initial location for one year.
- The replacement service is subject to applicable nonrecurring charges.

Other than these above exceptions, a customer must fulfill his term plan for the entire capacity, or be subject to termination liability for that portion of capacity that was not in place the entire term. In addition to the one year minimum period on services subsequently added, termination liability is calculated as follows:

If a customer disconnects service during the first year, termination liability will be calculated at 100% of the monthly charges for the unexpired portion of the first year, and at 15% of the remainder of the term. If the disconnection takes place after the first year, termination liability is calculated at 15% of the monthly charges for the remainder of the term.

Service availability limited. Refer to # footnote on Page 7-149.

© 2022 Frontier Communications Parent, Inc. All rights reserved

7. Special Access Service (Cont'd)

7.2 Service Descriptions (Cont'd)

7.2.15 Dedicated SONET Entrance Facilities (DSEF)# (Cont'd)

(F) Conversions

Customers who wish to convert existing High Capacity Special Access services to DSEF may do so without termination liability as long as the total capacity of Special Access service at their premises does not decrease. A new contract period is begun with the conversion; no credit is given for time-in-service on the new term plan. Applicable nonrecurring charges for new installations, rearrangements, or moves will apply.

If customers want to convert an DSEF service to a Dedicated SONET Ring (DSR), there will be no termination liability as long as the total capacity of Special Access services at the premises does not decrease. Credit for time-in-service will not be given for a conversion from DSEF to DSR. Applicable nonrecurring charges for DSR service will apply.

(G) Deployment

Service is provided where SONET facilities and bandwidth are available that can provide the requested interface. Generally, service will be available in the same service areas as specified for Dedicated SONET Shared Dual Path Service, as shown in Section 7.2.14(C)(2)(b).

(H) Rate Regulations

(1) Monthly rates, as set forth in Section 7.5.21 following, apply to DSEF Terminations. The monthly rates are differentiated by the term plan and DSEF Interface selected by the customer. Nonrecurring charges, as set forth in Section 7.5.21(C) following, apply to initial and subsequent installations of DSEF Terminations.

(2) Additionally, the monthly rates for DSEF Terminations apply on a tapered schedule as set forth in Section 7.5.21(A) following. The monthly rate to be billed for each DSEF Termination is based on the total number of DSEF Terminations that are in-service on the bill date of each month, and applies on a per customer designated premises and per Billing Account Number (BAN) basis. To determine the total number of DSEF Terminations for the bill period, the Telephone Company will count (i) all DSEF Terminations; and (ii) all Telephone Company provided SONET entrance facilities that are provided in connection with a Telephone Company provided point-to-point SONET service or ethernet private line service that terminate at such customer designated premises, inclusive of all such DSEF Terminations and SONET entrance facilities that are in service and billed under the same BAN.

Service availability limited. Refer to # footnote on Page 7-149.

© 2022 Frontier Communications Parent, Inc. All rights reserved

7. Special Access Service (Cont'd)

7.2 Service Descriptions (Cont'd)

7.2.15 Dedicated SONET Entrance Facilities (DSEF)# (Cont'd)

(H) Rate Regulations (Cont'd)

(3) For example, a customer purchases five (5) DSEFs that are in-service at three (3) different customer designated premises, with the 5 DSEFs being billed under two (2) different BANs.

(a) The first customer designated premises has two (2) DSEFs, one with fifteen (15) in-service STS1 DSEF Terminations and the other with five (5) in-service STS1 DSEF Terminations for a total of twenty (20) STS1 DSEF Terminations. Both DSEFs are billed under the same BAN. The monthly rate to be billed for each DSEF Termination in the 2 DSEFs at the first customer designated premises is the monthly rate shown for 20 STS1 DSEF Terminations. Monthly rates for STS1 DSEF Terminations are set forth in Section 7.5.21(A) following and apply in accordance with Section 14 following.

(b) The second customer designated premises has two (2) DSEFs, one with twenty (20) in-service STS1 DSEF Terminations and the other with twenty-two (22) in-service STS1 DSEF Terminations, for a total of forty-two (42) STS1 DSEF Terminations. Each DSEF at the second customer designated premises is billed under a separate BAN. The monthly rate to be billed for the DSEF with 20 STS1 Terminations is the monthly rate shown for 20 STS1 DSEF Terminations. The monthly rate to be billed for the DSEF with 22 STS1 Terminations is the monthly rate shown for 22 STS1 DSEF Terminations. Monthly rates for STS1 DSEF Terminations are set forth in Section 7.5.21(A) following and apply in accordance with Section 14 following.

(c) The third customer designated premises has one (1) DSEF with nine (9) in-service STS1 DSEF Terminations billed under the same BAN. The monthly rate to be billed for each such DSEF Termination is the monthly rate shown for 9 STS1 DSEF Terminations. Monthly rates for STS1 DSEF Terminations are set forth in Section 7.5.21(A) following and apply in accordance with Section 14 following.

(4) Monthly rates for electrical DSEF Interfaces are set forth in Section 7.5.21(B) following and apply in accordance with Section 14 following. When a customer orders an DSEF with an STS1 DSEF Termination and an electrical interface, both the monthly rate for the electrical DSEF Interface (as set forth in Section 7.5.21(B) following) and the monthly rate for the STS1 Termination (as set forth in Section 7.5.21(A) following) apply. The monthly rates are differentiated by the term plan selected by the customer. Nonrecurring charges as set forth in Section 7.5.21(C) following apply to each electrical DSEF Interface installed.

Service availability limited. Refer to # footnote on Page 7-149.

(8)

© 2022 Frontier Communications Parent, Inc. All rights reserved

7. Special Access Service (Cont'd)

7.2 Service Descriptions (Cont'd)

7.2.16 Ethernet Private Line#

(A) General

(1) Ethernet Private Line service provides managed optical transport of data signals of various speeds over the Telephone Company's shared network. Ethernet Private Line architecture allows for point-to-point transmissions of varying bandwidths between customer designated premises or between a customer designated location and a collocation arrangement where a customer is provided Collocated Interconnection as described in Section 19 following.

(2) Ethernet Private Line is provided where Telephone Company fiber optic facilities and equipment with sufficient bandwidth capacity permit.

Effective March 30, 2007, orders for new Ethernet Private Line are no longer permitted. The Telephone Company will continue to provide Ethernet Private Line pursuant to this Section 7.2.16 on any existing Ethernet Private Line that is in-service as of March 30, 2007, or any order for Ethernet Private Line that is placed with the Telephone Company prior to March 29, 2007 (collectively, Existing Ethernet Private Line), subject to the following conditions:

a. For any Existing Ethernet Private Line that is currently subscribed to a term plan (i.e., commitment periods of 1-, 3-, 5-, and 7-years), the Telephone Company will continue to provide the Existing Ethernet Private Line for an additional six (6) months beyond the expiration date of the customer's current commitment period, or until the customer replaces the Existing Ethernet Private Line with a comparable Telephone Company provided service, or discontinues service, whichever comes first. Effective March 30, 2007, moves, additions and/or changes are not permitted.

b. For any Existing Ethernet Private Line whose term plan expired prior to March 30, 2007, but the Existing Ethernet Private Line continued on a month-to-month basis at prevailing rates, the Telephone Company will continue to provide the Existing Ethernet Private Line until September 30, 2007, or until the customer replaces the Existing Ethernet Private Line with a comparable Telephone Company provided service, or discontinues service, whichever comes first. Effective March 30, 2007, moves, additions and/or changes are not permitted.

© 2022 Frontier Communications Parent, Inc. All rights reserved

7. Special Access Service (Cont'd)

7.2 Service Descriptions (Cont'd)

7.2.16 Ethernet Private Line# (Cont'd)

(B) Service Description

(1) Ethernet Private Line service consists of 3 components, an On-Net Channel Extension, an On-Net Channel Mileage, and an Access Aggregation Port.

(a) On-Net Channel Extension provides the communications path and interface termination from a customer's premises to the serving wire center or between the customer premises and the serving wire center where the customer has Collocated Interconnection Service pursuant to Section 19 following. The On-Net Channel Extension utilizes a Telephone Company optical network element at the customer-designated premises.

(b) On-Net Channel Mileage provides transport between two Telephone Company Serving Wire Centers (SWCs). On-Net Channel Mileage is measured in airline miles between the SWCs involved.

(c) Access Aggregation Ports support multiple Ethernet, Fibre Channel, and/or FiCON signal(s) that are mapped into SONET at one end of the channel.

(2) Ethernet Private Line On-Net Channel Extensions may be available as protected or unprotected.

(a) For protected services, the Telephone Company will provision the service over diversely routed, self-healing architecture. Protected services allow for a near 100% availability and restoration in the event of a network failure.

(b) For unprotected services, the Telephone Company does not guarantee the service will be provisioned over diversely routed facilities.

Service availability limited. Refer to # footnote on Page 7-159.

© 2022 Frontier Communications Parent, Inc. All rights reserved

7. Special Access Service (Cont'd)
7.2 Service Descriptions (Cont'd)
7.2.16 Ethernet Private Line# (Cont'd)
(B) Service Description (Cont'd)
(3) Channel Interfaces (Cont'd)

The following demonstrates the number of STS1s and Access Aggregation Ports that are required for each Ethernet Private Line Mapped Interfaces.

SONET Mappings & Ports

SONET Mapped Interface	STS1s	Access Aggregation Port
100 Mbps Ethernet (50Mb) Mapped to STS1	1 - STS1	OC3, OC12, OC48
100 Mbps Ethernet (Full Rate) Mapped to OC3c	3 - STS1s	OC12, OC48
1 Gbps Ethernet (50Mb) Mapped to OC3	1 - STS1	OC3, OC12, OC48
1 Gbps Ethernet (150Mb) Mapped to OC3	3 - STS1s	OC12, OC48
1 Gbps Ethernet (300Mb) Mapped to OC12	6 - STS1s	OC12, OC48
1 Gbps Ethernet (450Mb) Mapped to OC12	9 - STS1s	OC12, OC48
1 Gbps Ethernet (600Mb) Mapped to OC12	12 - STS1s	OC48
1 Gbps Ethernet (Full Rate) Mapped to OC48	21 - STS1s	OC48
1 Gbps Fibre Channel (Full Rate) Mapped to OC48	19 - STS1s	OC48
1 Gbps FiCON (Full Rate) Mapped to OC48	19 - STS1s	OC48
Aggregation Ports	Total STS1s	
OC3 Port - Supports Up to 3 Total Mapped STS1s	3 - Total STS1s	N/A
OC12 Port - Supports Up to 2 Mapped STS1s	12 - Total STS1s	N/A
OC48 Port - Supports Up to 48 Mapped STS1s	48 - Total STS1s	N/A

Service availability limited. Refer to # footnote on Page 7-159.

© 2022 Frontier Communications Parent, Inc. All rights reserved

7. Special Access Service (Cont'd)

7.2 Service Descriptions (Cont'd)

7.2.16 Ethernet Private Line# (Cont'd)

(B) Service Description (Cont'd)

(4) The Access Aggregation Port will only be permitted at a customer designated premises. The Access Aggregation Port is not available to a Collocated Interconnection location.

(a) This port must utilize a SONET interface (i.e., OC3, OC12, OC48) at the point of demarcation at the customer designated premises. An Access Aggregation Port can only reside at one end of an Ethernet Private Line circuit. The end of an Ethernet Private Line circuit that is not assigned to an Access Aggregation Port must have a native Ethernet hand-off.

(5) Ethernet Private Line service transmissions are provided in the following protocols/data interfaces:

- Ethernet: transmits Ethernet at 10 Mbps
- Fast Ethernet: transmits at 100 Mbps
- Gigabit Ethernet: transmits at 1 Gbps
- Ethernet Mapped to STS1
- Fast Ethernet Mapped to STS1
- Fast Ethernet Mapped to OC3c
- Gigabit Ethernet Mapped to OC3
- Gigabit Ethernet Mapped to OC12
- Gigabit Ethernet Mapped to OC12c
- Gigabit Ethernet Mapped to OC48
- Gigabit Fibre Channel Mapped to OC48
- Gigabit FiCON Mapped to OC48
- Ethernet Private Line Services Mapped to OC3 Access Aggregation Port
- Ethernet Private Line Services Mapped to OC12 Access Aggregation Port
- Ethernet Private Line Services Mapped to OC48 Access Aggregation Port

Service availability limited. Refer to # footnote on Page 7-159.

© 2022 Frontier Communications Parent, Inc. All rights reserved

7. Special Access Service (Cont'd)

7.2 Service Descriptions (Cont'd)

7.2.16 Ethernet Private Line# (Cont'd)

(B) Service Description (Cont'd)

(5) Ethernet Private Line services may connect to other Telephone Company services capable of transmitting the specified protocol.

(a) An Ethernet Private Line Ethernet mapped to STS1; Fast Ethernet mapped to STS1 and/or OC3c; Gigabit Ethernet mapped to OC3, OC12, OC12c and/or OC48 service may be multiplexed onto a port on a higher speed node of a Dedicated SONET Ring (DSR) service for transport over the higher bit rate DSR.

(b) An Ethernet Private Line Ethernet mapped to STS1; Fast Ethernet mapped to OC3c; and/or Gigabit Ethernet mapped to OC12c service may be multiplexed on to an DSBT service of a higher bit rate for transport.

(c) An Ethernet Private Line Ethernet mapped to STS1; Fast Ethernet mapped to STS1 and/or OC3c; Gigabit Ethernet mapped to OC3, OC12 and/or OC12c service may be connected to an equal speed service of an Dedicated SONET Entrance Facility (DSEF).

An Ethernet Private Line Fast Ethernet mapped to OC3c and/or Gigabit Ethernet mapped to OC12c service may connect to an equal speed Optical Transport Channel of an Dedicated SONET Optical Transport Service (DSOTS) at a node on the DSOTS ring.

(e) An Ethernet Private Line Gigabit 50, 150, 300, 450 or 600 Mbps Partial Rate and/or Full Rate Ethernet service may be multiplexed onto a GigE port on a higher speed Enhanced Node of a Dedicated SONET Ring (DSR) service for transport over the higher bit rate DSR at an equivalent speed GigE.

(f) An Ethernet Private Line Gigabit Full Rate Ethernet service may be connected to Gigabit Ethernet Optical Transport Channel of an Dedicated SONET Optical Transport Service (DSOTS) at a node on the DSOTS ring.

(g) An Ethernet Private Line Gigabit Fibre Channel and/or Gigabit FICON service may be connected to a Gigabit Fibre Channel and/or Gigabit FICON Optical Transport Channel via a node on an Dedicated SONET Optical Transport Service (DSOTS) ring.

(h) Gigabit 50, 150, 300, 450, or 600 Mbps Partial Rate and/or Full Rate Ethernet service may connect where a customer has a Collocated Interconnection arrangement pursuant to Section 19 following.

Service availability limited. Refer to # footnote on Page 7-159.

© 2022 Frontier Communications Parent, Inc. All rights reserved

7. Special Access Service (Cont'd)

7.2 Service Descriptions (Cont'd)

7.2.16 Ethernet Private Line# (Cont'd)

(B) Service Description (Cont'd)

(5) (Cont'd)

(i) Reserved

(j) An Ethernet Private Line Full Rate Gigabit Ethernet service may connect, as native Ethernet to native Ethernet only, from a customer designated location to a wire center where connection to a Ethernet LAN Service (ELS) Network-to-Network Interface (NNI) Port Only Connection occurs. Regulations, rates and charges for ELS NNI Port Only Connection are set forth in Frontier Telephone Companies Tariff F.C.C. No. 8. An Ethernet-to-SONET mapped option is not available on any Ethernet Private Line circuit which connects to an ELS NNI Port Only Connection.

(k) An Ethernet Private Line Full Rate Gigabit Ethernet service may connect, as native Ethernet to native Ethernet only, from a Collocated Interconnection Service (CIS) arrangement, as set forth in Section 19 following, to another wire center (i.e., other than the wire center where the CIS arrangement is provided) where connection to an ELS NNI Port Only Connection occurs. Regulations, rates and charges for ELS NNI Port Only Connection are set forth in Frontier Telephone Companies Tariff F.C.C. No. 8.. An Ethernet-to-SONET mapped option is not available on any Ethernet Private Line circuit which connects to an ELS NNI Port Only Connection.

(l) Reserved

(m) Ethernet Private Line may also be connected to the following Telephone Company provided services, where such connections are technically and operationally feasible, as determined by the Telephone Company.

- dedicated SONET ring service
- point-to-point SONET service
- optical hubbing service
- DWDM ring service
- SONET entrance facility service
- switched ethernet service

Service availability limited. Refer to # footnote on Page 7-159.

© 2022 Frontier Communications Parent, Inc. All rights reserved

7. Special Access Service (Cont'd)

7.2 Service Descriptions (Cont'd)

7.2.16 Ethernet Private Line# (Cont'd)

(C) Technical Specifications

The technical specifications for the protocols transmitted over Ethernet Private Line are delineated in the following technical publications:

Protocol	Publication
SONET	GR-253-CORE, Issue 4
10Mbps Ethernet	IEEE 802.3-2005/Cor2/D2.0-2007
100 Mbps Fast Ethernet	IEEE 802.3u-1995
1 Gbps Gigabit Ethernet	IEEE 802.3z-1998
1 Gbps Gigabit Fibre Channel	ANSI INCITS 303-1998 (R2003)
1 Gbps Gigabit FiCON	ANSI INCITS 296-1997 (R2007)

Terms and Conditions

(1) A planning session is required prior to the submission of an order for Ethernet Private Line. Ethernet Private Line is available based on negotiated intervals as described in Section 5.2.1(B) preceding.

(2) Where distance limitations affect the Telephone Company's ability to engineer end-to-end transport of some protocols, the Telephone Company will notify the customer that it cannot provide the requested service.

(3) All signals generated by the customer's equipment (CPE/customer provided equipment) must meet industry standards and specifications. See (C) of this section preceding.

(4) The customer is responsible to ensure that its equipment meets any applicable technical requirements or limitations for the protocol being transmitted.

(5) The customer is responsible for any error detection and error correction of the data generated by its equipment.

(6) The Telephone company assumes no responsibility for the quality of the signal generated by CPE and will deliver the signal in the format provided by the customer.

Service availability limited. Refer to # footnote on Page 7-159.

© 2022 Frontier Communications Parent, Inc. All rights reserved

7. Special Access Service (Cont'd)

7.2 Service Descriptions (Cont'd)

7.2.16 Ethernet Private Line# (Cont'd)

Terms and Conditions (Cont'd)

(7) When requested by the customer, one or more Ethernet Private Line Ethernet, Fast Ethernet, Gigabit Ethernet, Gigabit Fibre Channel, and/or FiCON signal(s) may be mapped into a SONET signal. The options for mapping a single signal are:

(a) The options for mapping a single signal are:

- 10 Mbps Ethernet to STS1
- 100 Mbps Fast Ethernet to STS1 and/or OC3c
- 1 Gbps Gigabit Ethernet to OC3, OC12, OC12c, and/or OC48
- 1 Gbps Fibre Channel to OC48
- 1 Gbps FiCON to OC48

(b) The options for mapping multiple signals are:

- 10 Mbps Ethernet to OC3, OC12, and/or OC48
- 100 Mbps Fast Ethernet to OC3, OC12, and/or OC48
- 1 Gbps Gigabit Ethernet to OC3, OC12, and/or OC48
- 1 Gbps Fibre Channel to OC48
- 1 Gbps FiCON to OC48

(c) Only one end of an Ethernet Private Line channel may be Ethernet-to-SONET mapped. The mapping of multiple signals requires placement of an Ethernet Private Line Access Aggregation Port as described in (B)(4) preceding.

An Ethernet-to-SONET mapped option is not available on any Ethernet Private Line circuit which connects to a Collocated Interconnection arrangement pursuant to Section 19 following. An Ethernet Private Line circuit which connects to a Collocated Interconnection arrangement is not allowed to connect to any other Telephone Company service. When an Ethernet Private Line circuit connects to a Collocated Interconnection arrangement, no additional Channel Extension charges apply as a result of the connection to the Collocated Interconnection arrangement. When Ethernet Private Line connects to a Collocated Interconnection arrangement, the Ethernet Private Line circuit will be cross-connected to the Collocated Interconnection arrangement, and all rates and charges for such Collocated Interconnection arrangement as set forth in Section 19 following shall apply in addition to any charges for Ethernet Private Line.

(e) The Aggregation port option is not available where cross-connection to a Collocated Interconnection arrangement occurs.

(8) Where facilities, conditions, and/or sufficient bandwidth capacity permit, the Telephone Company, upon customer request, may provide a diverse fiber path between the customer designated premises and its Serving Wire Center. Rates and charges may apply as specified in the Special Construction tariff.

Service availability limited. Refer to # footnote on Page 7-159.

© 2022 Frontier Communications Parent, Inc. All rights reserved

7. Special Access Service (Cont'd)

7.2 Service Descriptions (Cont'd)

7.2.16 Ethernet Private Line# (Cont'd)

(E) Rate Regulations

(1) Ethernet Private Line is available for 1, 3, 5, and 7-year commitment periods/term plans.

(2) The minimum service period for Ethernet Private Line is one year.

(3) Upon expiration of a commitment period, the customer may choose to continue service under a new commitment period or cancel service. If the customer does not choose one of these options, the Telephone Company will continue the service at the monthly rate for the original commitment period.

(4) The customer has the option, within sixty (60) days prior to the expiration date for its commitment period, to extend its expiring Plan to a longer commitment period, for which time-in-service credit will be allowed for the expiring plan. The commitment period selected for the extended plan must be longer that the commitment period of the expiring plan, e.g., an expiring 1-Year Term may be extended to either a 3-Year, 5-Year, or 7-Year Commitment period. Time-in-service credit lessens the actual time commitment for the extended plan. For example, Time in Service Credit for an expiring 3-Year term plan applied toward a new 7-year plan equals a new commitment period of 4 years at the 7-year plan rate. The rate for the longer commitment period will apply effective with the first bill day following expiration of the commitment period for the existing plan and continue through the remainder of the commitment period associated with the extended plan. No adjustment for the increased discount associated with the extended plan will be made to the monthly rates already billed on the expiring plan.

(5) A change in protocol of an On-Net Channel Extension is treated as a discontinuance of service and an installation of both, a new On-Net Channel Extension and the appropriate On-Net Channel Mileage, and will result in termination liability charges applied for the discontinuance of the existing service.

(6) Monthly recurring charges (MRCs) apply for On-Net Channel Extensions, On-Net Channel Mileage, and Access Aggregation Ports.

(7) The MRC for the Channel Extension applies per channel extension and at the specified term plan rate. The On-Net Channel Extension charge is also dependent on the type of facility interface provided.

(8) The MRC for the Channel Mileage applies on a per mile basis for the airline miles between the Serving Wire Centers. When the mileage calculation results in a fraction of a mile, it is rounded up to the next whole mile.

Service availability limited. Refer to # footnote on Page 7-159.

© 2022 Frontier Communications Parent, Inc. All rights reserved

7. Special Access Service (Cont'd)

7.2 Service Descriptions (Cont'd)

7.2.16 Ethernet Private Line# (Cont'd)

(E) Rate Regulations (Cont'd)

(9) The MRC for the Access Aggregation Port applies per port and at the specified term plan rate. The Access Aggregation Port charge is also dependent on the type of facility interface provided.

(10) Nonrecurring charges (NRCs) apply for the initial installation of On-Net Channel Extensions and Access Aggregation Ports.

(11) When connecting Ethernet Private Line services to other Telephone Company provided services, the rates and charges, and terms and conditions of the connecting services also apply.

(12) The MRCs and NRCs for Ethernet Private Line are listed in Section 7.5.25.

(13) When connecting a Ethernet Private Line circuit to a Collocated Interconnection arrangement pursuant to Section 19 following, the MRC for the Channel Extension that provides the communications path and interface termination from a customer's premises to the serving wire center will apply at the specified term plan rate, as set forth in Section 7.5.25 following. The MRC for the Channel Extension rate element will not apply at the CIS arrangement end of the service. The customer shall also be charged an MRC for the Channel Mileage at the specified term plan rate on a fixed and on a per mile basis for the airline miles between the Serving Wire Centers, if applicable. In addition to charges described herein, any other charges associated with connecting Ethernet Private Line to a Collocated Interconnection arrangement are described in Section 19 following.

(14) When a Ethernet Private Line circuit is ordered from a customer designated premises to a wire center where connection to an ELS NNI Port Only Connection occurs, as set forth in Section 7.2.16(B)(5)(j) preceding, the Channel Extension rate element at the customer designated premises will apply at the specified term plan rate, as set forth in Section 7.5.25 following. The NNI Port Only Connection rate element will apply in lieu of the Channel Extension rate element at the ELS end of the service. The customer shall also be charged Ethernet Private Line Channel Mileage at the specified term plan rate on a fixed and on a per mile basis for the airline miles between the Serving Wire Centers, if applicable.

Service availability limited. Refer to # footnote on Page 7-159.

© 2022 Frontier Communications Parent, Inc. All rights reserved

7. Special Access Service (Cont'd)

7.2 Service Descriptions (Cont'd)

7.2.16 Ethernet Private Line# (Cont'd)

(E) Rate Regulations (Cont'd)

(15) When a Ethernet Private Line circuit is ordered to connect a CIS arrangement pursuant to Section 19 following and an ELS NNI Port Only Connection in another wire center, as set forth in Section 7.2.16(B)(5)(k) preceding, the Channel Extension rate element will not apply at the CIS arrangement end of the service. The NNI Port Only Connection rate element will apply in lieu of the Channel Extension rate element at the ELS end of the service. The customer shall also be charged Ethernet Private Line Channel Mileage at the specified term plan rate on a fixed and on a per mile basis for the airline miles between the serving wire centers. In addition to charges described herein, any other charges associated with connecting Ethernet Private Line to a Collocated Interconnection arrangement are described in Section 19 following.

(16) When a Ethernet Private Line circuit is ordered from a customer designated premises to a wire center where connection to a Telephone Company provided switched ethernet service network-to-network interface port only connection occurs, the Channel Extension rate element at the customer designated premises will apply. The switched ethernet service network-to-network interface port only connection rate element will apply in lieu of the Channel Extension rate element at the switched ethernet service end of the service. The customer shall also be charged Ethernet Private Line Channel Mileage at the specified term plan rate on a fixed and on a per mile basis for the airline miles between the Serving Wire Centers, if applicable.

(17) When a Ethernet Private Line circuit is ordered to connect a CIS arrangement pursuant to Section 19 following and a Telephone Company provided switched ethernet service network-to-network interface port only connection in another wire center, the Channel Extension rate element will not apply at the CIS arrangement end of the service. The switched ethernet service network-to-network interface port only connection rate element will apply in lieu of the Channel Extension rate element at the switched ethernet service end of the service. The customer shall also be charged Ethernet Private Line Channel Mileage at the specified term plan rate on a fixed and on a per mile basis for the airline miles between the serving wire centers. In addition to charges described herein, any other charges associated with connecting Ethernet Private Line to a Collocated Interconnection arrangement are described in Section 19 following.

Service availability limited. Refer to # footnote on Page 7-159.

© 2022 Frontier Communications Parent, Inc. All rights reserved

7. Special Access Service (Cont'd)

7.2 Service Descriptions (Cont'd)

7.2.16 Ethernet Private Line# (Cont'd)

(F) Termination Liability

(1) Termination liability applies to On-Net Channel Mileage, On-Net Channel Extension, and Access Aggregation Port service components and applies when either is disconnected prior to expiration of the commitment period, i.e., term plan.

(2) The termination liability charge is equal to 25% of the remaining monthly charges for the balance of the commitment period beginning with the date of disconnection or cancellation, and ending with the expiration date of the commitment period.

(3) Termination liability applies in addition to any charges associated with satisfying the minimum period obligation.

(4) When the service includes connection to another Telephone Company service, termination liability for the connecting service also applies in accordance with the regulations specified for that connecting service.

(5) Termination liability will not apply if a customer changes its term plan to a longer commitment period as explained in (E) preceding.

(6) Termination liability will not apply to the existing service when (1) a Ethernet Private Line Ethernet service is upgraded to a higher bit rate Ethernet Private Line Ethernet service, Fibre Channel service, and/or FiCON service (e.g., a Ethernet Private Line Ethernet 10Mbps service is changed to a Ethernet Private Line Ethernet 100Mbps service or to a Ethernet Private Line Ethernet 1Gbps service), and (2) the new term is equal to or of greater length than the term for the terminating service.

Service availability limited. Refer to # footnote on Page 7-159.

© 2022 Frontier Communications Parent, Inc. All rights reserved

7. Special Access Service (Cont'd)

7.3 Channel Interface and Network Channel Codes

This section explains the Channel Interface codes and Network Channel codes that the customer must specify when ordering Special Access Service. Included is an example which explains the specific characters of the code, a glossary of Channel Interface codes, impedance levels, Network Channel codes and compatible Channel Interfaces.

Example: If the customer specifies a MT Network Channel Code and a 2DC8-3 Channel Interface at the customer's premises, the following is being requested:

MT	=	Metallic Channel with a Predefined Technical Specification Package (1)
2	=	Number of physical wires at customer premises
DC	=	Facility interface for direct current or voltage
8	=	Variable impedance level
3	=	Metallic facilities (DC continuity) for direct current/low frequency control signals or slow speed data (30 baud)

7.3.1 Glossary of Channel Interface Codes and Options

Code	Option	Definition
AB -		accepts 20 Hz ringing signal at customer's point of termination
AC -		accepts 20 Hz ringing signal at customer's end user's point of termination
AH -		analog high capacity interface
-	B	60 kHz to 108 kHz (12 channels)
-	C	312 kHz to 552 kHz (60 channels)
-	D	564 kHz to 3084 kHz (600 channels)
CT -		Centrex Tie Trunk Termination
CX -		Digital Termination on a Switch
DA -		data stream in VF frequency band at customer's end user's point of termination
DB -		data stream in VF frequency band at customer's point of termination
-	10	VF for TG1 and TG2
-	43	VF for 43 Telegraph Carrier type signals, TG1 and TG2
DC -		direct current or voltage
-	1	monitoring interface with series RC combination (McCullon format)
-	2	Telephone Company energized alarm channel
-	3	Metallic facilities (DC continuity) for direct current/low frequency control signals or slow speed data (30 baud)

© 2022 Frontier Communications Parent, Inc. All rights reserved

7. Special Access Service (Cont'd)

7.3 Channel Interface and Network Channel Codes (Cont'd)

7.3.1 Glossary of Channel Interface Codes and Options (Cont'd)

Code	Option	Definition
DD -		DATAPHONE Select-A-Station (and TABS) interface at customer's point of termination
DE -		DATAPHONE Select-A-Station (and TABS) interface at the customer's end user's point of termination
DS -		digital hierarchy interface
-	15	1.544 Mbps (DS1) format per PUB 62411 and Supplement A plus D4
-	15B	1.544 Mbps (DS1) format per PUB 62411 and Supplement A plus D4 with B8ZS clear channel capability
-	15E	8-bit PCM encoded in one 64 Kbps of the DS1 signal
-	15F	8-bit PCM encoded in two 64 Kbps of the DS1 signal
-	15G	8-bit PCM encoded in three 64 Kbps of the DS1 signal
-	15H	14/11-bit PCM encoded in six 64 Kbps of the DS1 signal
-	15J	1.544 Mbps format per Technical Reference GR-54-CORE, Issue 1
-	15K	1.544 Mbps format per Technical Reference GR-54-CORE, Issue 1 plus extended framing format
-	15L	1.544 Mbps (DS1) with SF signaling
-	15S	1.544 Mbps (DS1) with B8ZS clear channel capability per Technical Reference GR-54-CORE, Issue 1, plus extended framing
-	31	3.152 Mbps (DS1C)
-	31L	3.152 Mbps (DS1C) with SF signaling
-	44	44.736 Mbps (DS3)
	44A	44.736 Mbps (DS3 unchannelized and C-Bit Parity per GR-342
	44I	44.736 Mbps (DS3) with C-Bit Parity format
-	44L	44.736 Mbps (DS3) with SF signaling
DU -		digital access interface
-	19	19.2 kbps
-	24	2.4 Kbps
-	24S	2.4 Kbps with secondary channel
	48	4.8 Kbps
-	48S	4.8 Kbps with secondary channel
	56	56.0 Kbps
-	56S	56.0 Kbps with secondary channel
-	64	64.0 kbps
	96	9.6 Kbps
-	96S	9.6 Kbps with secondary channel
-	A	1.544 Mbps format per Technical Reference GR-54-CORE, Issue 1
-	B	1.544 Mbps format per Technical Reference GR-54-CORE, Issue 1 plus D4
-	D	1.544 Mbps (DS1) format Technical Reference GR-54-CORE, Issue 1 plus D4 with B8ZS clear channel capability
-	C	1.544 Mbps format per PUB 62411 and Supplement A plus extended framing format
-	S	1.544 Mbps (DS1) with B8ZS clear channel per Technical Reference GR-54-CORE, Issue 1 plus extended framing

© 2022 Frontier Communications Parent, Inc. All rights reserved

7. Special Access Service (Cont'd)

7.3 Channel Interface and Network Channel Codes (Cont'd)

7.3.1 Glossary of Channel Interface Codes and Options (Cont'd)

Code	Option	Definition
DX -		duplex signaling interface at customer's point of termination
DY -		duplex signaling interface at customer's end user's point of termination
EA -	E	Type I E&M Lead Signaling. Customer at POT or customer's end user at POT originates on E Lead.
EA -	M	Type I E&M Lead Signaling. Customer at POT or customer's end user at POT originates on M Lead.
EB -	E	Type II E&M Lead Signaling. Customer at POT or customer's end user at POT originates on E Lead.
EB -	M	Type II E&M Lead Signaling. Customer at POT or customer's end user at POT originates on M Lead.
EC -		Type III E&M signaling at customer POT
EX -	A	tandem channel unit signaling for loop start or ground start and customer supplies open end (dial tone, etc.) functions.
EX -	B	tandem channel unit signaling for loop start or ground start and customer supplies closed end (dial pulsing, etc.) functions.
FC -		Optical Interface
-	1	133 Mbps Fibre Channel
-	2	266 Mbps Fibre Channel
-	5	531 Mbps Fibre Channel
-	10C	FDDI SM 125 Mbps
-	10D	FDDI MM 125 Mbps
-	13	135 Mbps (3-DS3s) Optical Interface Transmission bit rate
-	15	Wavelength channel at 155.520 Mbps
-	25	Wavelength channel at 2.5 Gbps
-	45	45 Mbps (DS3) Optical Interface Transmission bit rate
-	62	Wavelength channel at 2.488 Gbps
-	FC	Fibre channel at 1.06 Gbps
-	CCS	ESCON 200 Mbps
-	CTS	ETR/CLO 8 Mbps
-	GFM	FICON 1.06 Gbps
-	GIS	ISC 1.06 Gbps
FM -		DWDM 4 port
-	S	Sub rate multiplexing, 1.25 Gbps
GO -		ground start loop signaling - open end function by customer or customer's end user
GS -		ground start loop signaling - closed end function by customer or customer's end user
-	C	Centrex foreign exchange termination
-	M	for terminating in central office located answering service concentrator

© 2022 Frontier Communications Parent, Inc. All rights reserved

7. Special Access Service (Cont'd)

7.3 Channel Interface and Network Channel Codes (Cont'd)

7.3.1 Glossary of Channel Interface Codes and Options (Cont'd)

Code	Option	Definition
IA -		E.I.A. (25 pin RS-232)
LA -		end user loop start loop signaling - Type A OPS registered port open end
LB -		end user loop start loop signaling - Type B OPS registered port open end
LC -		end user loop start loop signaling - Type C OPS registered port open end
LN -		Local Area Network Interface
-	100	Fast Ethernet 125 Mbps
-	1GE	Gigabit Ethernet 1.25 Gbps
LO -		loop start loop signaling - open end function by customer or customer's end user
LR -		20 Hz automatic ringdown interface at customer with Telephone Company provided PLAR
LS -		loop start loop signaling - closed end function by customer or customer's end user
NO -		no signaling interface, transmission only
OP -		Optical Parameter
-	F	Facility
PG -		program transmission - no dc signaling
-	1	nominal frequency from 50 to 15000 Hz
-	3	nominal frequency from 200 to 3500 Hz
-	5	nominal frequency from 100 to 5000 Hz
-	8	nominal frequency from 50 to 8000 Hz
PR -		protective relaying*
RV -	O	reverse battery signaling, one way operation, originate by customer
-	T	reverse battery signaling, one way operation, terminate function by customer or customer's end user
SF -		single frequency signaling with VF band at either customer POT or customer's end user POT
SO -		SONET/SONET Digital Hierarchy Optical Interface
SN -		SONET Network
-	F	Facility

© 2022 Frontier Communications Parent, Inc. All rights reserved

7. Special Access Service (Cont'd)

7.3 Channel Interface and Network Channel Codes (Cont'd)

7.3.1 Glossary of Channel Interface Codes and Options (Cont'd)

Code	Option	Definition
TF -		telephotograph interface
TT -		telegraph/teletypewriter interface at either customer POT or customer's end user POT
-	2	20.0 milliamperes
-	3	3.0 milliamperes
-	6	62.5 milliamperes
TV -		television interface
-	1	combined (diplexed) video and one audio signal
-	2	combined (diplexed) video and two audio signals
-	5	video plus one (or two) audio 5 kHz signal(s) or one (or two) two wire
-	15	video plus one (or two) audio 15 kHz signal(s) or one (or two) two wire
WA -		wideband bandwidth interface at customer's end user POT
-	1	limited bandwidth
-	2	nominal passband from 29000 to 40000 Hz
WB -		wideband data interface at customer POT
-	18S	18.75 kbps, synchronous
-	19A	up to 19.2 kbps, asynchronous
-	19S	19.2 kbps, synchronous
-	23A	up to 230.4 kbps, asynchronous
-	23S	230.4 kbps, synchronous
-	40S	40.8 kbps, synchronous
-	50A	up to 50.0 kbps, asynchronous
-	50S	50.0 kbps, synchronous
WC -		wideband data interface at customer's end user POT
-	18	18.75 kbps, synchronous
-	19	for 12-wire interface:9.2 kbps, synchronous for 10-wire interface: up to 19.2 kbps, asynchronous
-	23	up to 230.4 kbps, synchronous
-	23S	230.4 kbps, synchronous
-	40	40.8 kbps, synchronous
-	50	for 12-wire interface: 50.0 kbps, synchronous for 10-wire interface: up to 50.0 kbps, asynchronous
WD -		wideband bandwidth interface at customer POT
-	1	nominal passband from 300 to 18000 Hz
-	2	nominal passband from 28000 to 44000 Hz
-	3	nominal passband from 29000 to 44000 Hz

* Available only for the transmission of audio tone protective relaying signals used in the protection of electric power systems during fault conditions.

© 2022 Frontier Communications Parent, Inc. All rights reserved

7. Special Access Service (Cont'd)

7.3 Channel Interface and Network Channel Codes (Cont'd)

7.3.2 Impedance

The nominal reference impedance with which the channel will be terminated for the purpose of evaluating transmission performance:

Value (ohms)	Code(s)
110	0
150	1
600	2
900	3+
135	5
75	6
124	7
Variable	8
100	9

7.3.3 Digital Hierarchy Channel Interface Codes

This interface is available to customers that select the multiplexed four-wire DS-1 or higher facility interface option at the customer designated premises. Customers who have installed multiplexed DS1 systems to a Facility Hub and are connecting individual facilities to these systems to complete service arrangements will be requested to provide subsequent system and channel assignment data. Customers who request these interfaces in conjunction with other compatible non digital interfaces without system and channel assignment data will be provided service, where facilities permit, on Telephone Company DS1 Facilities Inventory. The various digital bit rates in the digital hierarchy employ the channel interface code 4DS9, 4DS0 or 4DS6 plus the speed options indicated below:

Electrical Interface Code and Speed Option	Nominal Bit Rate (Mbps)	Digital Hierarchy Level
4DS9-15	1.544	DS1
4DS9-31	3.152	DS1C
4DS6-44	44.736	DS3

Optical Interface Code and Speed Option	Nominal Bit Rate (Mbps)	Number of Equivalent DS3s
2FC-45	45	1
2FC-13	135	3

© 2022 Frontier Communications Parent, Inc. All rights reserved

7. Special Access Service (Cont'd)

7.3 Channel Interface and Network Channel Codes (Cont'd)

7.3.4 Service Designator/Network Channel Code Conversion Table

The purpose of this table is to show the relationship between the service designator codes (e.g., VGC, MT2, etc.) and the network channel codes that are used for various administrative purposes.

Service Designator Code	Network Channel Code
MTC	MQ
MT1	NT
MT2	NU
MT3	NV
TGC	NQ
TG1	NW
TG2	NY
VGC	LQ
VG1	LB
VG2	LC

© 2022 Frontier Communications Parent, Inc. All rights reserved

7. Special Access Service (Cont'd)

7.3 Channel Interface and Network Channel Codes (Cont'd)

7.3.4 Service Designator/Network Channel Code Conversion Table (Cont'd)

Service Designator Code	Network Channel Code
VG3	LD
VG4	LE
VG5	LF
VG6	LG
VG7	LH
VG8	LJ
VG9	LK
VG10	LN
VG11	LP
VG12	LR
WAC	SE
WAC	SF
APC	PQ
AP1	PE
AP2	PF
AP3	PJ
AP4	PK
TVC	TQ
TV1	TV
TV2	TW
WA1	WJ
WA1T	WQ
WA2	WL
WA2A	WR
WA3	WN
WA4	WP
WD1	WB
WD2	WE
WD3	WF
DA1	XA
DA2	XB
DA3	XG
DA4	XH
DA5	XE
DA6	YN
HC0	HS
HC1	HC
HC1C	HD
HC3	HF
HC3C	HF, QTY 3
Lightwave Facilities Designator Code	LX

© 2022 Frontier Communications Parent, Inc. All rights reserved

7. Special Access Service (Cont'd)

7.3 Channel Interface and Network Channel Codes (Cont'd)

7.3.5 Compatible Channel Interfaces

The following tables show the channel interface codes (CIs) which are compatible:

(A) Metallic

Compatible CIs		Compatible CIs	
4AH5-B	2DC8-1	4AH6-D	2DC8-2
4AH5-B	2DC8-2	2DC8-1	2DC8-2
4AH6-C	2DC8-1	2DC8-3	2DC8-3
4AH6-C	2DC8-2	4DS9-*	2DC8-1
4AH6-D	2DC8-1	4DS9-*	2DC8-2

(B) Telegraph Grade

Compatible CIs		Compatible CIs		Compatible CIs	
4AH5-B	10IA8	4AH6-D	4TT2-6	4DB2-43+	4TT2-2
4AH5-B	2TT2-2	2DB2-10	10IA8	4DS9-**	10IA8
4AH5-B	4TT2-2	2DB2-10	2TT2-2	4DS9-**	2TT2-2
4AH5-B	2TT2-6	2DB2-10	4TT2-2	4DS9-**	4TT2-2
4AH5-B	4TT2-6	2DB2-43+	10IA8	4DS9-**	2TT2-6
4AH6-C	10IA8	2DB2-43+	2TT2-2	4DS9-**	4TT2-6
4AH6-C	2TT2-2	2DB2-43+	2TT2-6	2TT2-2	2TT2-2
4AH6-C	4TT2-2	2DB2-43+	4TT2-2	2TT2-3	2TT2-2
4AH6-C	2TT2-6	4DB2-10	10IA8	2TT2-3	4TT2-2
4AH6-C	4TT2-6	4DB2-10	2TT2-2	2TT2-6	2TT2-6
4AH6-D	10IA8	4DB2-10	4TT2-2	2TT2-6	4TT2-2
4AH6-D	2TT2-2	4DB2-43+	10IA8	4TT2-2	4TT2-2
4AH6-D	4TT2-2	4DB2-43+	2TT2-6	4TT2-6	2TT2-6
4AH6-D	2TT2-6				

* See 7.3.3 preceding for explanation. Available only when the customer has provided System and Channel assignment data.

** See 7.3.3 preceding for explanation.

\+ Supplemental Channel Assignment information required.

© 2022 Frontier Communications Parent, Inc. All rights reserved

7. Special Access Service (Cont'd)

7.3 Channel Interface and Network Channel Codes (Cont'd)

7.3.5 Compatible Channel Interfaces (Cont'd)

(C) Voice Grade

Compatible CIs		Compatible CIs		Compatible CIs	
4AB2	4AB2	4AH6-C	4DA2	4AH6-D	2DY2
		4AH6-C	2DA2	4AH6-C	9DY2
4AB2	4AC2			4AH6-C	9DY3
4AB3	4AC2	4AH5-B	6DA2	4AH6-C	6DY2
4AB2	2AC2	4AH5-B	4DA2	4AH6-C	6DY3
4AB3	2AC2	4AH5-B	2DA2	4AH6-C	4DY2
2AB2	2AC2			4AH6-C	2DY2
2AB3	2AC2	4AH6-D	4DE2	4AH5-B	9DY2
		4AH6-C	4DE2	4AH5-B	9DY3
4AB2	4SF2	4AH5-B	4DE2	4AH5-B	6DY2
4AB3	4SF2	4AH6-D	2DE2	4AH5-B	6DY3
4AC2	4AC2	4AH6-C	2DE2	4AH5-B	4DY2
4AC2	2AC2	4AH5-B	2DE2	4AH5-B	2DY2
4AH6-D	4AC2	4AH6-D	4DX3	4AH6-D	9EA2
4AH6-D	2AC2	4AH6-C	4DX3	4AH6-D	9EA3
4AH6-C	4AC2	4AH5-B	4DX3	4AH6-D	6EA2-E
4AH6-C	2AC2	4AH6-D	4DX2	4AH6-D	6EA2-M
4AH5-B	2AC2	4AH6-C	4DX2	4AH6-D	4EA2-E
4AH5-B	4AC2	4AH5-B	4DX2	4AH6-D	4EA2-M
				4AH6-C	9EA2
4AH6-D	2CT3	4AH6-D	9DY2	4AH6-C	9EA3
4AH6-C	2CT3	4AH6-D	9DY3	4AH6-C	6EA2-E
4AH5-B	2CT3	4AH6-D	6DY2		
		4AH6-D	6DY3		
4AH6-D	6DA2	4AH6-D	4DY2		
4AH6-D	4DA2				
4AH6-D	2DA2				
4AH6-C	6DA2				

© 2022 Frontier Communications Parent, Inc. All rights reserved

7. Special Access Service (Cont'd)

7.3 Channel Interface and Network Channel Codes (Cont'd)

7.3.5 Compatible Channel Interfaces (Cont'd)

(C) Voice Grade (Cont'd)

Compatible CIs		Compatible CIs		Compatible CIs	
4AH6-C	6EA2-M	4AH6-D	6GS2	4AH6-D+	2LO2
4AH6-C	4EA2-E	4AH6-D	4GS2	4AH6-C+	2LO3
4AH6-C	4EA2-M	4AH6-D	2GS3*	4AH6-C+	2LO2
4AH5-B	9EA2	4AH6-D	2GS2	4AH5-B+	2LO3
4AH5-B	9EA3	4AH6-C	6GS2	4AH5-B+	2LO2
4AH5-B	6EA2-E	4AH6-C	4GS2		
4AH5-B	6EA2-M	4AH6-C	2GS3*	4AH6-D+	4LR2
4AH5-B	4EA2-E	4AH6-C	2GS2	4AH6-D+	2LR2
4AH5-B	4EA2-M	4AH5-B	6GS2	4AH6-C+	4LR2
		4AH5-B	4GS2	4AH6-C+	2LR2
4AH6-D	8EB2-E	4AH5-B	2GS3*	4AH5-B+	4LR2
4AH6-D	8EB2-M	4AH5-B	2GS2	4AH5-B+	2LR2
4AH6-D	6EB2-E				
4AH6-D	6EB2-M	4AH6-D	2LA2	4AH6-D+	6LS2
4AH6-C	8EB2-E	4AH6-C	2LA2	4AH6-D+	4LS2
4AH6-C	8EB2-M	4AH5-B	2LA2	4AH6-D+	2LS2
4AH6-C	6EB2-E			4AH6-D+	2LS3**
4AH6-C	6EB2-M	4AH6-D	2LB2	4AH6-C+	6LS2
4AH5-B	8EB2-E	4AH6-C	2LB2	4AH6-C+	4LS2
4AH5-B	8EB2-M	4AH5-B	2LB2	4AH6-C+	2LS2
4AH5-B	6EB2-E			4AH6-C+	2LS3**
4AH5-B	6EB2-M	4AH6-D	2LC2	4AH5-B+	6LS2
		4AH6-C	2LC2	4AH5-B+	4LS2
4AH6-D	2G02	4AH5-B	2LC2	4AH5-B+	2LS2
4AH6-D	2G03			4AH5-B+	2LS3**
4AH6-C	2G02	4AH6-D	2LO3		
4AH6-C	2G03				
4AH5-B	2G02				
4AH5-B	2G03				

* The "C" and "M" options as described in 7.3.1 preceding are also available with this combination (i.e., 2GS3-C or 2GS3-M).

** The "M" option as described in 7.3.1 preceding is also available with this combination (i.e., 2LS3-M).

© 2022 Frontier Communications Parent, Inc. All rights reserved

7. Special Access Service (Cont'd)

7.3 Channel Interface and Network Channel Codes (Cont'd)

7.3.5 Compatible Channel Interfaces (Cont'd)

(C) Voice Grade (Cont'd)

Compatible CIs		Compatible CIs	Compatible CIs		Compatible CIs		
4AH6-D	4NO2	4AH6-D	4TF2	2CT3	4SF2	4DS9-*	4AC2
4AH6-D	2NO2	4AH6-D	2TF2	2CT3	4SF3	4DS9-*	2AC2
4AH6-C	4NO2	4AH6-C	4TF2	2CT3	6EB2-E	4DS9-*	6DA2
4AH6-C	2NO2	4AH6-C	2TF2	2CT3	6EB2-M	4DS9-*	4DA2
4AH5-B	4NO2	4AH5-B	4TF2	2CT3	6EB3-E	4DS9-*	2DA2
4AH5-B	2NO2	4AH5-B	2TF2	2CT3	8EB2-E		
		2CT3	2CT3	2CT3	8EB2-M	4DS9-*	4DE2
4AH6-D	4PR2	2CT3	4DS9-*	2CT3	8EC2	4DS9-*	2DE2
4AH6-D	2PR2			4CT2	4DX2	4DS9-*	4DX3
4AH6-C	4PR2	2CT3	6DX2	4CT2	4DS9-*	4DS9-*	4DX2
4AH6-C	2PR2	2CT3	4DX2	4CT2	4SF2		
4AH5-B	4PR2	2CT3	4DX3	4CT2	6EA2-E		
4AH5-B	2PR2			4CT2	6EA2-M		
		2CT3	9DY3	4CT2	8EB2-E	4DS9-*	9DY3
4AH6-D	4RV2-T	2CT3	6DY3	4CT2	8EB2-M	4DS9-*	9DY2
4AH6-D	2RV2-T	2CT3	9DY2	4CT2	8EC2	4DS9-*	6DY3
				6DA2	6DA2		
4AH6-C	4RV2-T	2CT3	6DY2	6DA2	4DA2	4DS9-*	6DY2
4AH6-C	2RV2-T	2CT3	4DY2	6DA2	2DA2	4DS9-*	4DY2
			4DA2	4DA2			
4AH5-B	4RV2-T	2CT3	2DY2	4DA2	2DA2	4DS9-*	2DY2
4AH5-B	2RV2-T			2DA2	2DA2		
		2CT3	9EA3	4DB2	6DA2	4DS9-*	9EA2
4AH6-D	4SF2	2CT3	9EA2	4DB2	4DA2	4DS9-*	9EA3
4AH6-C	4SF2	2CT3	6EA2-E	4DB2	2DA2	4DS9-*	6EA2-E
4AH5-B	4SF2	2CT3	6EA2-M	2DB3	2DA2	4DS9-*	6EA2-M
4AH6-D	4SF3	2CT3	4EA2-E	2DB2	2DA2	4DS9-*	4EA2-E
4AH6-C	4SF3	2CT3	4EA2-M	4DB2	4DB2	4DS9-*	4EA2-M
4AH5-B	4SF3			4DB2	4NO2		
				4DB2	4NO2		
				2DB2	2NO2		
				4DB2	4PR2		
				4DB2	2PR2		
				2DB2	2PR2		
				4DD3	4DE2		
				4DD3	2DE2		

* See 7.3.3 preceding for explanation.

© 2022 Frontier Communications Parent, Inc. All rights reserved

7. Special Access Service (Cont'd)

7.3 Channel Interface and Network Channel Codes (Cont'd)

7.3.5 Compatible Channel Interfaces (Cont'd)

(C) Voice Grade (Cont'd)

Compatible CIs		Compatible CIs		Compatible CIs	
4DS9-*	8EB2-E	4DS9-*	4NO2	4DX3	9DY2
4DS9-*	8EB2-M	4DS9-*	2NO2	4DX2	6DY3
4DS9-*	6EB2-E			4DX3	6DY3
4DS9-*	6EB2-M	4DS9-*	4PR2	4DX2	6DY2
		4DS9-*	2PR2	4DX3	6DY2
4DS9-*	2GO2			4DX2	4DY2
4DS9-*	2GO3	4DS9-*	4RV2-T	4DX3	4DY2
		4DS9-*	2RV2-T	4DX2	2DY2
4DS9-*	6GS2	4DS9-*	2RV3-O	4DX3	2DY2
4DS9-*	4GS2	4DS9-*	4SF2		
4DS9-*	2GS2	4DS9-*	4SF3	6DX2	9EA3
4DS9-*	2GS3**			6DX2	9EA2
		4DS9-*	4TF2	6DX2	6EA2-E
4DS9-*	2LA2	4DS9-*	2TF2	6DX2	6EA2-M
				6DX2	4EA2-E
4DS9-*	2LB2	4DX2	4DX2	6DX2	4EA2-M
		4DX3	4DX2	4DX2	9EA2
4DS9-*	2LC2	4DX3	4DX3	4DX3	9EA2
				4DX2	9EA3
4DS9-*	2LO2	6DX2	9DY3	4DX3	9EA3
4DS9-*	2LO3	6DX2	9DY2	4DX2	6EA2-E
		6DX2	6DY3	4DX3	6EA2-E
4DS9-*	4LR2	6DX2	6DY2	4DX2	6EA2-M
4DS9-*	2LR2	6DX2	4DY2	4DX3	6EA2-M
		6DX2	2DY2	4DX2	4EA2-E
4DS9-*	6LS2	4DX2	9DY3	4DX3	4EA2-E
4DS9-*	4LS2	4DX3	9DY3	4DX2	4EA2-M
4DS9-*	2LS2	4DX2	9DY2	4DX3	4EA2-M
4DS9-*	2LS3***				

* See 7.3.3 preceding for explanation.

** The "C" and "M" options as described in 7.3.1 preceding are also available with this combination (i.e., 2GS3-C or 2GS3-M).

*** The "M" option as described in 7.3.1 preceding is also available with this combination (i.e., 2LS3-M).

© 2022 Frontier Communications Parent, Inc. All rights reserved

7. Special Access Service (Cont'd)

7.3 Channel Interface and Network Channel Codes (Cont'd)

7.3.5 Compatible Channel Interfaces (Cont'd)

(C) Voice Grade (Cont'd)

Compatible CIs		Compatible CIs		Compatible CIs	
6DX2	8EB2-E	4DX2	6LS2	9DY2	6DY3
6DX2	8EB2-M	4DX3	6LS2	9DY3	4DY2
6DX2	6EB2-E	4DX3	4LS2	9DY2	4DY2
6DX2	6EB2-M	4DX2	4LS2	9DY2	2DY2
4DX2	8EB2-E	4DX3	2LS3*	9DY3	2DY2
4DX2	8EB2-M	4DX2	2LS3*	6DY3	6DY3
4DX3	8EB2-E	4DX3	2LS2	6DY3	6DY2
4DX3	8EB2-M	4DX2	2LS2	6DY2	6DY2
4DX2	6EB2-E	2DX3	2LS2	6DY3	4DY2
4DX2	6EB2-M	2DX3	2LS3*	6DY3	2DY2
4DX3	6EB2-E			6DY2	4DY2
4DX3	6EB2-M	4DX3	4RV2-T	6DY2	2DY2
		4DX2	4RV2-T	4DY2	2DY2
4DX2	2LA2	4DX3	2RV2-T	4DY2	4DY2
4DX3	2LA2	4DX2	2RV2-T	2DY2	2DY2
2DX3	2LA2	4DX2	2RV3-O	6EA2-E	4AC2
		6DX2	4SF2	6EA2-M	4AC2
4DX2	2LB2	4DX2	4SF2	6EA2-E	2AC2
4DX3	2LB2	4DX3	4SF2	6EA2-M	2AC2
2DX3	2LB2	4DX2	4SF3		
		4DX3	4SF3	9EA2	9DY3
4DX2	2LC2			9EA2	9DY2
4DX3	2LC2	9DY3	9DY3	9EA2	6DY3
2DX3	2LC2	9DY3	9DY2	9EA2	6DY2
		9DY2	9DY2	9EA2	4DY2
4DX2	2LO3	9DY3	6DY3	9EA2	2DY2
4DX3	2LO3	9DY3	6DY2	9EA3	9DY3
2DX3	2LO3	9DY2	6DY2		

* The "M" option as described in 7.3.1 preceding is also available with this combination (i.e., 2LS3-M).

© 2022 Frontier Communications Parent, Inc. All rights reserved

7. Special Access Service (Cont'd)

7.3 Channel Interface and Network Channel Codes (Cont'd)

7.3.5 Compatible Channel Interfaces (Cont'd)

(C) Voice Grade (Cont'd)

Compatible CIs		Compatible CIs		Compatible CIs	
9EA3	9DY2	4EA2-M	9DY2	4EA3-E	9EA2
9EA3	6DY3	4EA2-M	6DY3	4EA3-E	9EA3
9EA3	6DY2	4EA2-M	6DY2	4EA2-M	4EA2-M
9EA3	4DY2	4EA2-M	4DY2		
9EA3	2DY2	4EA2-M	2DY2	9EA2	8EB2-E
6EA2-E	9DY3			9EA2	8EB2-M
6EA2-E	9DY2	9EA2	9EA2	9EA2	6EB2-E
6EA2-E	6DY3	9EA2	9EA3	9EA2	6EB2-M
6EA2-E	6DY2	9EA2	6EA2-E	9EA3	8EB2-E
6EA2-E	4DY2	9EA2	6EA2-M	9EA3	8EB2-M
6EA2-E	2DY2	9EA2	4EA2-E	9EA3	6EB2-E
6EA2-M	9DY3	9EA2	4EA2-M	9EA3	6EB2-M
6EA2-M	9DY2	9EA3	9EA3	6EA2-E	8EB2-E
6EA2-M	6DY3	9EA3	6EA2-E	6EA2-E	8EB2-M
6EA2-M	6DY2	9EA3	6EA2-M	6EA2-E	6EB2-E
6EA2-M	4DY2	9EA3	4EA2-E	6EA2-E	6EB2-M
6EA2-M	2DY2	9EA3	4EA2-M	6EA2-M	8EB2-E
4EA2-E	9DY3	6EA2-E	6EA2-E	6EA2-M	8EB2-M
4EA2-E	9DY2	6EA2-E	6EA2-M	6EA2-M	6EB2-E
4EA3-E	9DY3	6EA2-M	6EA2-M	6EA2-M	6EB2-M
4EA3-E	9DY2	6EA2-E	4EA2-E	4EA2-E	8EB2-E
4EA3-E	6DY3	6EA2-E	4EA2-M	4EA2-E	8EB2-M
4EA3-E	6DY2	6EA2-M	4EA2-E	4EA3-E	8EB2-E
4EA3-E	4DY2	6EA2-M	4EA2-M	4EA3-E	8EB2-M
4EA3-E	2DY2	4EA2-E	4EA2-E	4EA2-E	6EB2-E
4EA2-E	6DY3	4EA3-E	6EA2-E	4EA2-E	6EB2-M
4EA2-E	6DY2	4EA3-E	6EA2-M	4EA3-E	6EB2-E
4EA2-E	4DY2	4EA3-E	4EA2-E	4EA3-E	6EB2-M
4EA2-E	2DY2	4EA3-E	4EA2-M	4EA2-M	8EB2-E
4EA2-M	9DY3	4EA2-E	4EA2-M		

© 2022 Frontier Communications Parent, Inc. All rights reserved

7. Special Access Service (Cont'd)

7.3 Channel Interface and Network Channel Codes (Cont'd)

7.3.5 Compatible Channel Interfaces (Cont'd)

(C) Voice Grade (Cont'd)

Compatible CIs		Compatible CIs		Compatible CIs	
4EA2-M	8EB2-M	9EA3	4SF2	6EB3-E	9DY2
4EA2-M	6EB2-E	9EA2	4SF2	6EB3-E	9DY3
4EA2-M	6EB2-M	6EA2-E	4SF3	6EB2-E	6DY2
		6EA2-M	4SF3	6EB3-E	6DY2
6EA2-E	2LA2	6EA2-E	4SF2	6EB2-E	6DY3
6EA2-M	2LA2	6EA2-M	4SF2	6EB3-E	6DY3
		4EA3-E	4SF2	6EB2-E	4DY2
6EA2-E	2LB2	4EA2-E	4SF2	6EB3-E	2DY2
6EA2-M	2LB2	4EA2-M	4SF2	6EB3-E	4DY2
				6EB2-M	9DY2
6EA2-E	2LC2	8EB2-E	4AC2	6EB2-M	9DY3
6EA2-M	2LC2	8EB2-M	4AC2	6EB2-M	6DY2
		8EB2-E	2AC2	6EB2-M	6DY3
6EA2-E	2LO3	8EB2-M	2AC2	6EB2-M	4DY2
6EA2-M	2LO3			6EB2-E	2DY2
		8EB2-E	9DY3	6EB2-M	2DY2
6EA2-E	6LS2	8EB2-E	9DY2		
6EA2-M	6LS2	8EB2-E	6DY3	6EB3-E	9EA2
6EA2-E	4LS2	8EB2-E	6DY2	6EB3-E	9EA3
6EA2-M	4LS2	8EB2-E	4DY2	6EB3-E	6EA2-E
6EA2-E	2LS2	8EB2-E	2DY2	6EB3-E	6EA2-M
6EA2-M	2LS2	8EB2-M	9DY3	6EB3-E	4EA2-E
6EA2-E	2LS3*	8EB2-M	9DY2	6EB3-E	4EA2-M
6EA2-M	2LS3*	8EB2-M	6DY3		
		8EB2-M	6DY2	8EB2-E	8EB2-E
6EA2-E	4RV2-T	8EB2-M	4DY2	8EB2-E	8EB2-M
6EA2-M	4RV2-T	8EB2-M	2DY2	8EB2-M	8EB2-M
6EA2-E	2RV2-T	6EB2-E	9DY2	8EB2-E	6EB2-E
6EA2-M	2RV2-T				
6AE2-E	2RV3-O	6EB2-E	9DY3	8EB2-E	6EB2-M
6AE2-M	2RV3-O				

* The "M" option as described in 7.3.1 preceding is also available with this combination.

© 2022 Frontier Communications Parent, Inc. All rights reserved

7. Special Access Service (Cont'd)

7.3 Channel Interface and Network Channel Codes (Cont'd)

7.3.5 Compatible Channel Interfaces (Cont'd)

(C) Voice Grade (Cont'd)

Compatible CIs		Compatible CIs		Compatible CIs	
8EB2-M	6EB2-E	8EB2-E	4RV2-T	8EC2	8EB2-M
8EB2-M	6EB2-M	8EB2-M	4RV2-T	8EC2	6EB2-E
6EB2-E	6EB2-E	8EB2-E	2RV2-T	8EC2	6EB2-M
		8EB2-M	2RV2-T		
6EB2-E	6EB2-M	8EB2-E	2RV3-O		
6EB3-E	8EB2-E	8EB2-M	2RV3-O	8EC2	4SF2
6EB3-E	8EB2-M	8EB2-E	4SF2		
6EB2-M	6EB2-M	8EB2-M	4SF2	6EX2-B	2G03
		8EB2-E	4SF3		
8EB2-E	2LA2	8EB2-M	4SF3	6EX2-A	6GS2
8EB2-M	2LA2	6EB3-E	4SF2	6EX2-A	4GS2
		6EB2-E	4SF2	6EX2-A	2GS2
8EB2-E	2LB2	6EB2-M	4SF2	6EX2-A	2GS3**
8EB2-M	2LB2				
		8EC2	9DY2	6EX2-B	2LA2
8EB2-E	2LC2	8EC2	9DY3		
8EB2-M	2LC2	8EC2	6DY2	6EX2-B	2LB2
		8EC2	6DY3		
8EB2-E	2LO3	8EC2	4DY2	6EX2-B	2LC2
8EB2-M	2LO3	8EC2	2DY2		
				6EX2-B	2LO2
8EB2-E	6LS2	8EC2	9EA2	6EX2-B	2LO3
8EB2-M	6LS2	8EC2	9EA3		
8EB2-E	4LS2	8EC2	6EA2-E	6EX2-B	4LR2
8EB2-M	4LS2	8EC2	6EA2-M	6EX2-B	2LR2
8EB2-E	2LS2	8EC2	4EA2-E		
8EB2-M	2LS2	8EC2	4EA2-M	6EX2-A	6LS2
8EB2-E	2LS3*			6EX2-A	4LS2
8EB2-M	2LS3*	8EC2	8EB2-E	6EX2-A	2LS2
				6EX2-A	2LS3

* The "M" option as described in 7.3.1 preceding is also available with this combination (i.e., 2LS3-M).

** The "C" and "M" options as described in 7.3.1 preceding are also available with this combination (i.e., 2GS3-C or 2GS3-M).

© 2022 Frontier Communications Parent, Inc. All rights reserved

7. Special Access Service (Cont'd)

7.3 Channel Interface and Network Channel Codes (Cont'd)

7.3.5 Compatible Channel Interfaces (Cont'd)

(C) Voice Grade (Cont'd)

Compatible CIs		Compatible CIs		Compatible CIs	
6EX2-A	4SF2	6LO2	6LS2	4LR2	4SF2
6EX2-B	4SF2	6LO2	4LS2	4LR3	4SF2
		6LO2	2LS2		
6GO2	6GS2	6LO2	2LS3**	6LS2	2LA2
6GO2	4GS2	4LO2	6LS2	4LS2	2LA2
6GO2	2GS2	4LO2	4LS2	4LS3	2LA2
6GO2	2GS3*	4LO3	6LS2	2LS2	2LA2
4GO2	6GS2	4LO3	4LS2	2LS3**	2LA2
4GO3	6GS2	4LO3	2LS3**		
4GO2	4GS2	4LO3	2LS2	6LS2	2LB2
4GO3	4GS2	4LO2	2LS2	4LS2	2LB2
4GO2	2GS2	4LO2	2LS3**	4LS3	2LB2
4GO2	2GS3*	2LO3	2LS3**	2LS2	2LB2
4GO3	2GS2	2LO3	2LS2	2LS3**	2LB2
4GO3	2GS3*	2LO2	2LS2		
2GO2	2GS2	2LO2	2LS3**	6LS2	2LC2
2GO3	2GS2			4LS2	2LC2
2GO2	2GS3*	6LO2	4SF2	4LS3	2LC2
2GO3	2GS3*	4LO2	4SF2	2LS2	2LC2
		4LO3	4SF2	2LS3**	2LC2
6GO2	4SF2				
4GO2	4SF2	4LR3	4LR2	6LS2	2LO3
4GO3	4SF2	4LR3	2LR2	6LS2	2LO2
		4LR2	4LR2	4LS2	2LO2
6GS2	2GO2	4LR2	2LR2	4LS2	2LO3
4GS2	4GO2	2LR2	2LR2	4LS3	2LO2
4GS2	2GO2	2LR3	2LR2	4LS3	2LO3
4GS3	2G02				
4GS2	2GO3				

* The "C" and "M" options as described in 7.3.1 preceding are also available with this combination (i.e., 2GS3-G or 2GS3-M).

** The "M" option as described in 7.3.1 preceding is also available with this combination (i.e., 2LS3-M).

© 2022 Frontier Communications Parent, Inc. All rights reserved

7. Special Access Service (Cont'd)

7.3 Channel Interface and Network Channel Codes (Cont'd)

7.3.5 Compatible Channel Interfaces (Cont'd)

(C) Voice Grade (Cont'd)

Compatible CIs		Compatible CIs		Compatible CIs	
6LS2	4SF2	4SF3	9DY2	4SF3	2LA2
4LS3	4SF2	4SF2	9DY3		
		4SF3	6DY3	4SF2	2LB2
4NO2	6DA2	4SF2	6DY2	4SF3	2LB2
4NO2	4DA2	4SF2	6DY3		
4NO2	2DA2	4SF3	6DY2	4SF2	2LC2
2NO2	6DA2	4SF2	4DY2	4SF3	2LC2
2NO2	4DA2	4SF3	4DY2		
2NO2	2DA2				
4NO2	4DE2	4SF3	2DY2	4SF2	2LO3
4NO2	2DE2	4SF2	2DY2	4SF3	2LO3
4NO2	4NO2	4SF3	9EA2	4SF2	2LR2
4NO2	2NO2	4SF3	9EA3	4SF3	4LR2
2NO2	2NO2	4SF3	4EA2-E	4SF3	2LR2
2NO3	2NO2	4SF3	4EA2-M		
				4SF3	6LS2
2NO3	2PR2	4SF3	6EB2-E	4SF2	4LS2
		4SF3	6EB2-M	4SF3	4LS2
4RV2-O	4RV2-T			4SF2	2LS2
4RV2-O	2RV2-T	4SF2	2GO3	4SF2	2LS3**
2RV2-O	2RV2-T			4SF3	2LS2
2RV3-O	4RV2-T	4SF3	6GS2	4SF3	2LS3**
4RV2-O	4SF2	4SF2	6GS2		
		4SF2	4GS2	4SF3	4RV2-T
4SF2	4AC2	4SF3	4GS2	4SF2	4RV2-T
4SF2	2AC2	4SF2	2GS2	4SF2	2RV2-T
				4SF2	2RV3-O
		4SF2	2GS3*	4SF3	2RV2-T
4SF3	9DY3	4SF3	2GS2		
4SF2	9DY2	4SF3	2GS3*	4SF3	4SF3
		4SF2	2LA2		

* The "C" and "M" options as described in 7.3.1 preceding are also available with this combination (i.e., 2GS3-G or 2GS3-M).

** The "M" option as described in 7.3.1 preceding is also available with this combination (i.e., 2LS3-M).

© 2022 Frontier Communications Parent, Inc. All rights reserved

7. Special Access Service (Cont'd)

7.3 Channel Interface and Network Channel Codes (Cont'd)

7.3.5 Compatible Channel Interfaces (Cont'd)

(C) Voice Grade (Cont'd)

Compatible CIs

6LS2	4SF2
4LS3	4SF2
4NO2	6DA2
4NO2	4DA2
4NO2	2DA2

WATS Access Line Service

Compatible CIs		Compatible CIs		Compatible CIs	
4DS9*	4DS9*	2LO3	4DS9*	2RV3-0	4RV2-0
2GO3	4DS9*	2LO3	2LS2	4RV2-0	4DS9*
2GO3	2GS2	2LO3	4LS2	4RV2-0	2RV2-T
2GO3	2GS3	4LO2	4DS9*	4RV2-0	2RV3-T
2GO3	4GS3	4LO2	2LS2	4RV2-0	4RV2-0
4GO2	4DS9*	4LO2	4LS2		
4GO2	2GS2	2RV3-0	4DS9*		
4GO2	2GS3	2RV3-0	2RV2-T		
4GO2	4GS2	2RV3-0	2RV3-T		

(E) Program Audio

Compatible CIs		Compatible CIs		Compatible CIs	
4AH5-B	2PG1-3	4AH6-D	2PG1-3	4DS9-15F	2PG2-5
4AH5-B	2PG1-5	4AH6-D	2PG1-5	4DS9-15G	2PG2-8
4AH5-B	2PG1-8	4AH6-D	2PG1-8	4DS9-15H	2PG2-1
4AH5-B	2PG2-3	4AH6-D	2PG2-3	2PG2-1	2PG1-1
4AH5-B	2PG2-5	4AH6-D	2PG2-5	2PG2-1	4PG2-1
4AH5-B	2PG2-8	4AH6-D	2PG2-8	2PG2-3	2PG1-3
4AH6-C	2PG1-3	4DS9-15E	2PG1-3	2PG2-3	2PG2-3
4AH6-C	2PG1-5	4DS9-15F	2PG1-5	2PG2-5	2PG1-5
4AH6-C	2PG1-8	4DS9-15G	2PG1-8	2PG2-5	2PG2-5
4AH6-C	2PG2-3	4DS9-15H	2PG1-1	2PG2-8	2PG1-8
4AH6-C	2PG2-5	4DS9-15E	2PG2-3	2PG2-8	2PG2-8
4AH6-C	2PG2-8				

© 2022 Frontier Communications Parent, Inc. All rights reserved

7. Special Access Service (Cont'd)

7.3 Channel Interface and Network Channel Codes (Cont'd)

7.3.5 Compatible Channel Interfaces (Cont'd)

(F) Video

Compatible CIs		Compatible CIs		Compatible CIs	
2TV6-1	4TV6-15	4TV6-5	4TV6-5	6TV6-5	6TV6-5
2TV6-1	4TV7-15	4TV6-5	4TV7-5	6TV6-5	6TV7-5
2TV6-2	6TV6-15	4TV6-15	4TV6-15	6TV6-15	6TV6-15
2TV6-2	6TV7-15	4TV6-15	4TV7-15	6TV6-15	6TV7-15
2TV7-1	4TV6-15	4TV7-15	4TV6-15	6TV7-5	6TV6-5
2TV7-1	4TV7-15	4TV7-15	4TV7-15	6TV7-5	6TV7-5
2TV7-2	6TV6-15	4TV7-5	4TV6-5	6TV7-15	6TV6-15
2TV7-2	6TV7-15	4TV7-5	4TV7-5	6TV7-15	6TV7-15

(G) Wideband Analog

Compatible CIs		Compatible CIs		Compatible CIs	
4AH5-B	4AH5-B	4AH6-D	4AH6-D	4WD5-1	4WA5-1
4AH6-C	4AH5-B	4AH5-B	4DS9-15	4WD5-2	4WA5-1
4AH6-C	4AH6-C	4AH5-B	4DU8-A, B, OR C	4WD5-3	4WA5-2
4AH6-D	4AH5-B	4AH6-C	4DU8-A, B, OR C		
4AH6-C	4AH6-C	4AH6-D	4DU8-A, B, OR C		

(H) Wideband Data

Compatible CIs		Compatible CIs		Compatible CIs	
8WB5-18S	12WC6-18	8WB5-23A	10WC6-23	8WB5-50A	10WC6-50
8WB5-19A	10WC6-19	8WB5-23S	12WC6-23S	8WB5-50S	12WC6-50
8WB5-19S	12WC6-19	8WB5-40S	12WC6-40		

© 2022 Frontier Communications Parent, Inc. All rights reserved

7. Special Access Service (Cont'd)

7.3 Channel Interface and Network Channel Codes (Cont'd)

7.3.5 Compatible Channel Interfaces (Cont'd)

(I) Digital Data

Compatible CIs		Compatible CIs		Compatible CIs	
4DS9-15	4DS9-15+	4DS9-15	6DU5-48	4DU5-96	4DU5-96
4DS9-15	4DU5-24	4DS9-15	6DU5-56	6DU5-24	6DU5-24
4DS9-15	4DU5-48	4DS9-15	6DU5-96	6DU5-48	6DU5-48
4DS9-15	4DU5-56	4DU5-24	4DU5-24	6DU5-56	6DU5-56
4DS9-15	4DU5-96	4DU5-48	4DU5-48	6DU5-96	6DU5-96
4DS9-15	6DU5-24	4DU5-56	4DU5-56		
4DS9-15	4DU5-24S	4DS9-15	6DU5-48S	4DU5-96S	4DU5-96S
4DS9-15	4DU5-48S	4DS9-15	6DU5-56S	6DU5-24S	6DU5-24S
4DS9-15	4DU5-56S	4DS9-15	6DU5-96S	6DU5-48S	6DU5-48S
4DS9-15	4DU5-96S	4DU5-24S	4DU5-24S	6DU5-56S	6DU5-56S
4DS9-15	6DU5-24S	4DU5-48S	4DU5-48S	6DU5-96S	6DU5-96S
		4DU5-56S	4DU5-56S		
4DS9-15	4DU5-19				
4DS9-15	4DU5-64				
4DU5-19	4DU5-19				
4DU5-64	4DU5-64				

\+ Available only as a cross connect of two digital channels at appropriate digital speeds at a Telephone Company Hub.

© 2022 Frontier Communications Parent, Inc. All rights reserved

7. Special Access Service (Cont'd)

7.3 Channel Interface and Network Channel Codes (Cont'd)

7.3.5 Compatible Channel Interfaces (Cont'd)

(J) High Capacity

Compatible CIs	
4DS6-44	4DS6-44
4DS6-44	6DU8-A,B or C
4DS6-44	4DU8-A,B or C
4DS9-15	4DS9-15+
4DS9-15J	4DS9-15J
4DS9-15K	4DS9-15K
4DS6-44C	4DS9-15
4DS6-44C	4DS9-15J
4DS6-44C	4DS9-15K
4DS6-44C	4DU8-A,B or C
4DS6-44C	4DS6-44
4DS6-44C	6DU8-A,B or C
4DS6-44	2FCF-45
4DS6-44C	2FCF-13
4DS6-44G	2FCF-54
2FCF-54	2FCF-54
4DS6-44G	4DS6-44G
01FCF.X	01FCF.X
4DS9-15B	4DS9-15B
4DS9-15K	4DS9-15K
4DS6.44A	4DS6.44A

Compatible CIs	
4DS9-15	6DU8-B
4DS9-15	4DU8-B
4DS9-15J	6DU8-A
4DS9-15J	4DU8-A
4DS9-15K	6DU8-B
4DS9-15K	4DU8-B
4DS9-15K	4DU8-C
4DS9-15K	4DU8-C
4DS9-31	4DS9-31
4DS9-31	6DU8-A,B or C
4DS9-31	4DU8-A,B or C
4DU8-A,B or C	4DU8-A,B or C
4DS6-44	4DS9-15
4DS6-44	4DS9-15J
4DS6-44	4DS9-15K
4DS6-44C	4DS6-44C
4DS6-44	4DU9-D
4DS6-44	4DU9-S
4DS6-44	4DU9-C
4DS6-44	4DU9-B
4DS6-44	4DS9-15B
4DS6-44	4DS9-15S
4DS9-15S	4DS9-15S
4DU9-D	4DU9-D
4DU9-S	4DU9-S
4DS9-15B	4DU9-D
4DS9-15S	4DU9-S
4DS6.44I	4DS6.44I

\+ Available only as a cross connect of two individual channels of 1.544 Mbps facilities at a Telephone Company Hub.

© 2022 Frontier Communications Parent, Inc. All rights reserved

7. Special Access Service (Cont'd)

7.3 Channel Interface and Network Channel Codes (Cont'd)

7.3.5 Compatible Channel Interfaces (Cont'd)

(K) Dedicated SONET Optical Transport Service

Compatible CIs	Compatible CIs
02FCF.15	02FCF.15
02FCF.62	02FCF.62
02FCF.25	02FCF.25
02FCF.FC	02FCF.FC
02FCF.FC1	02FCF.FC1
02FCF.FC2	02FCF.FC2
02FCF.FC5	02FCF.FC5
02FCF.CCS	02FCF.CCS
02FCF.GFM	02FCF.GFM
02FCF.GIS	02FCF.GIS
02FCF.CTS	02FCF.CTS
02FCF.10C	02FCF.10C
02FCF.10D	02FCF.10D
02FMF.4	02FMF.4
02FMS.S	02FMS.S
02LNF.100	02LNF.100
02LNF.1GE	02LNF.1GE
02TD6.E	02TD6.E
02SOF.D	02CXF.A, B or C
04SOF.D	02CXF.A, B or C

© 2022 Frontier Communications Parent, Inc. All rights reserved

7. Special Access Service (Cont'd)

7.3 Channel Interface and Network Channel Codes (Cont'd)

7.3.5 Compatible Channel Interfaces (Cont'd)

(L) Dedicated SONET Ring

Compatible CIs	Compatible CIs
O2CXF.A, B or C	
02LNF.A02	04DS6.44
02LNF.A03	04DS6.44I
02LNF.A04	04DS9.15
02LNF.A05	04DS9.15K
02LNF.A06	04DS9.15S
02LNF.A07	04DS9.1K
02LNF.A08	04DS9.1S
02LNF.A09	04DS9.1SN
02QBF.LL	04DU9.1KN
02QEF.LL	04DU9.1SN
02SMF.000	04DU9.CN
02SNF.000	04DU9.SN
02SOF.B	04DOF.B
02SOF.BB	04DOF.D
02SOF.BU	04SOF.F
02SOF.D	04SOF.X
02SOF.DB	02SSF.A02
02SOF.DU	02SSF.A03
02SOF.F	02SSF.A02
02SOF.FB	02SSF.A05
02SOF.FU	02SSF.A06
02SOF.I	02SSF.A07
02SOF.U	02SSF.A08
02SOF.X	02SSF.A09
02SQF.000	02SSF.B01
02SSF.B01	02SSF.B02
02SSF.B02	02SSF.C01
02SSF.C01	02SSF.C02
02SSF.C02	02SSF.C03
02SSF.C03	04ST6.A

(M) Ethernet Private Line

Compatible CIs	Compatible CIs	Compatible CIs
02LNF.A02	02LNF.A04	02LNF.A07
02SOF.B	02SOF.D	02SOF.F
04LN9.1CT	04LN9.10T	04SOF.B
04SOF.D	04SOF.F	04SOF.X
04ST6.A	04CMF.C3	04CMF.C12
04CMF.C48	02OPF.A02	02OPF.A04
02OPF.A07	02QBF.K02	02SOF.X

© 2022 Frontier Communications Parent, Inc. All rights reserved

7. Special Access Service (Cont'd)

7.3 Channel Interface and Network Channel Codes (Cont'd)

7.3.5 Compatible Channel Interfaces (Cont'd)

Optical Hubbing Service

Compatible CIs	Compatible CIs
02LNF.A02	04SMF.B9
02LNF.A04	04SMF.C6
02LNF.A07	04SMF.D3
02OPF.A02	04SMF.E
02OPF.A04	04SNF.A0G
02OPF.A07	04SNF.A4C
02QBF.LL	04SNF.A88
02SOF.B	04SNF.AG
02SOF.D	04SNF.B48
02SOF.F	04SNF.B84
02SOF.X	04SNF.C08
04FMF.008	04SNF.C8
04FMF.S6	04SNF.B
04LN9.1CT	04SNF.D
04QBF.LL	04SNF.E
04SMF.A0C	04SNF.F
04SMF.A18	04SNF.X
04SMF.A24	
04SMF.A3	
04SMF.AC	

© 2022 Frontier Communications Parent, Inc. All rights reserved

7. Special Access Service (Cont'd)

7.4 Rate Regulations

This section contains the specific regulations governing the rates and charges that apply for Special Access Service.

7.4.1 Types of Rates and Charges

There are three types of rates and charges. These are monthly rates, daily rates and nonrecurring charges. Additionally, certain Special Access rates and charges are applied based on "Price Cap" or “Price Bands”. Price Cap rates may be further differentiated by “Rate Zones”. (C)

Rate Zones are defined in Section 2.6 and are listed in Section 14.

Competitive Counties and Non-Competitive Counties are defined in Section 2.6 and the wire centers within such counties are listed in Section 14. In wire centers within a Competitive County, monthly rates and nonrecurring charges for Special Access rate elements are arranged in price bands. The price band for each serving wire center within a Competitive County is specified in Section 14 following. (C)

For Interexchange Carrier Point of Presence Special Access lines, Special Transport and Optional Features and Functions, including Multiplexing Arrangements, Price Band rates and charges apply regardless of whether the county is Competitive or Non-Competitive. In cases where Special Transport crosses price bands, the charge for the higher numbered price band applies.

For End User Special Access Lines, the application of “Price Cap” or “Price Band” is dependent upon whether or not the serving wire center is located in a Competitive County. If the End User Special Access Line is in a Competitive County, Price Band rates and charges apply. If the End User Special Access Line is in a Non-Competitive County, Price Cap rates and charges apply. Any rate element that is not labeled as either Price Band or Price Cap will apply in both Competitive and Non-Competitive Counties.

(C)

MSA’s are defined in Section 2.6 and are listed in Section 14.3. In wire centers within a qualifying MSA, monthly rates and nonrecurring charges for certain Special Access and SONET service rate elements are arranged in price bands. The price band for each serving wire center within a qualifying MSA and the type of Special Access Services which are subject to price band rating are specified in Section 14.3, following. In cases where Channel Mileage crosses price bands, the charge for the higher numbered price band applies. When channel mileage is between an MSA price band and a Non-qualifying MSA (N-MSA) wire center, the rates and charges for the N-MSA wire center (a rate zone charge or a basic (N-MSA) channel mileage charge) applys.

© 2022 Frontier Communications Parent, Inc. All rights reserved

7. Special Access Service (Cont'd)

7.4 Rate Regulations (M)

This section contains the specific regulations governing the rates and charges that apply for Special Access Service.

7.4.1 Types of Rates and Charges

The three types of rates and charges are described as follows:

(A) Monthly Rates

Monthly rates are flat recurring rates that apply each month or fraction thereof that a Special Access Service is provided. For billing purposes, each month is considered to have 30 days.

Monthly rates for Dedicated SONET Optical Transport Service are billed at Category I and Category II rates in accordance with 7.2.14(C)(4) (11) preceding. (M)

Material on this page used to appear on page 7-197.

© 2022 Frontier Communications Parent, Inc. All rights reserved

7. Special Access Service (Cont'd)

7.4 Rate Regulations (Cont'd)

7.4.1 Types of Rates and Charges (Cont'd)

(A) Monthly Rates (Cont'd)

(1) Channel Termination Monthly Rates # (C)

The channel termination rate structure for DS3 High Capacity Services differs based upon whether or not the channel termination is at a Primary or Secondary Premises. A Primary Premises is a customer designated premises where a DS3 High Capacity Service circuit/channel is either originated or terminated. Only one end of the channel can be a Primary Premises. A Secondary Premises any customer-designated premises other than the Primary Premises.

If one end of a DS3 High Capacity Service channel is either connected to or derived from a higher speed facility, the customer location with the DS3 High Capacity channel termination is classified as a Secondary Premises. When a DS3 High Capacity Service channel is provided with the Alternate Serving Wire Center optional feature, the alternately routed channel termination is considered to be at either a Primary Premises or a Secondary Premises, depending on the classification of the customer designated premises of the associated DS3 High Capacity Service channel termination.

For eligible services installed prior to November 30, 2021, monthly rates for DS3 High Capacity Services channel terminations at a primary premises apply on a tapered schedule as set forth in 7.5.9 following. The rate to be billed for each channel termination is based on a count of the total eligible Special Access channel terminations that are in service and in billing at the end of the bill period. (C)

For eligible services installed after November 30, 2021, the monthly rate for new DS3 High Capacity Service channel terminations at a primary premises apply at the Month to Month Per DS3 CT rate set forth in 7.5.9 following. (N)

Effective November 30, 2021 monthly rates for new DS3 High Capacity Services channel terminations at a primary premises will be billed at the Month to Month Per DS3 CT rate in 7.5.9 and the tapered schedule rate will not apply. DS3 High Capacity Service channel terminations at a primary premise in service prior to November 30, 2021 and billing rates on the tapered schedule in 7.5.9 will continue on the tapered schedule rate until the tapered schedule rate exceeds the Month to Month Per DS3 CT in 7.5.9 at which time the DS3 High Capacity channel termination at the primary premise will be converted to the Month to Month Per DS3 CT rate in 7.5.9. (N)

© 2022 Frontier Communications Parent, Inc. All rights reserved

7. Special Access Service (Cont'd)

7.4 Rate Regulations (Cont'd)

7.4.1 Types of Rates and Charges (Cont'd)

(A) Monthly Rates (Cont'd)

(1) Channel Termination Monthly Rates (Cont'd) # (C)

For DS3 High Capacity Service channel terminations at a primary Premise and in service prior to November 30, 2021, before the first billing period of each month, the Telephone Company will count all eligible DS3 High Capacity Special Access Services that are in service at a primary premises to determine the tapered schedule rate or to convert to the Month to Month fixed rate if the tapered schedule rate exceeds the month to month fixed rate. (C)

See Footnote on Page 7-198 (N)

© 2022 Frontier Communications Parent, Inc. All rights reserved

7. Special Access Service (Cont'd)

7.4 Rate Regulations (Cont'd)

7.4.1 Types of Rates and Charges (Cont'd)

(A) Monthly Rates (Cont'd)

(1) Channel Termination Monthly Rates (Cont'd) # (C)

When the tapered schedule rate is billed, the rate band determined by the last count taken shall be used to calculate all charges incurred by and credits due to the customer for DS3 High Capacity Special Access Services channel terminations established or discontinued during the preceding billing period. The count will not be adjusted for any reason for service order activity occurring after the count is made, including services that were installed prior to the count but were not in billing when the count was taken.

A secondary premises channel termination monthly rate applies to channel terminations at secondary premises locations.

(B) Daily Rates

Daily rates are flat recurring rates that apply to each 24 hour period or fraction thereof that a Program Audio or Video (Basic, SCVS and DVTS) Special Access Service is provided for part-time or occasional use. For purposes of applying daily rates, the 24 hour period is not limited to a calendar day.

The application of daily rates for Program Audio and Video service during a consecutive 30 day period is as follows. Daily rates will be topped at an amount equal to the monthly rate (i.e., the charge to the customer for usage billed at daily rates will not exceed the monthly rate). For each day or part day of usage after the daily rates have been topped, a charge equal to 1/30th of the monthly rate will apply.

Part-time or occasional Serial Component Video Service (SCVS) and/or Digital Video Transport Service (DVTS) provided within a consecutive 30-day period will be charged either the daily rate for each day provided or the monthly rate whichever is the lesser charge.

See Footnote on page 7-198 (N)

© 2022 Frontier Communications Parent, Inc. All rights reserved

7. Special Access Service (Cont'd)

7.4 Rate Regulations (Cont'd)

7.4.1 Types of Rates and Charges (Cont'd)

(C) Nonrecurring Charges

Nonrecurring charges are one-time charges that apply for specific work activity (i.e., installation, change or rearrangement to an existing service, or connection at non-standard premises). The types of nonrecurring charges that apply for Special Access Service are: installation of service, installation of optional features and functions, service changes, service rearrangements and Non-Standard Premises connection charges.

The nonrecurring charge rate structure applicable to the installation of access service may consist of "first" and "additional" charges, except for DS3 Service Entrance Facilities and Channel Termination, where only one rate applies. For each rate element ordered, the "first" charges apply to the first rate element (e.g., port or channel termination) specified on the service order. The "additional" charges will apply to each additional same-type rate element specified on the same service order, with the same date due, and at or between (A) the same end points, or (B) between or within the same-type multiplexed high capacity systems located in the same wire center and at or between the same end points.

(1) Installation of Service

For part-time Video Services, nonrecurring charges also apply for a Telephone Company technician to oversee the operation of service during an event for which the customer has ordered part-time Video Service and requested that a technician be present. The charge for a Telephone Company technician to oversee the operation of a part-time service during an event will be the same as the charge for Stand By Labor. The charge for Stand By Labor will apply per customer. When a single Telephone Company technician oversees the operation of part-time service(s) for more than one customer, the total charge to perform Stand By Labor will be divided equally between the customers involved. Stand By Labor charges are set forth in Section 13.2.6(B) following.

The nonrecurring charges apply to each rate element of the service installed. The nonrecurring charges for the installation of service are set forth in 7.5, 8, and 19.7 following as nonrecurring charges for Channel Termination, Termination, Transport Channel, Port Node Entrance Ring, Collocated Interconnection Cross-Connect Service or SPOT Bay Frame and Terminations rate elements, etc. (See Note below.)

When a newly installed service is added to a Commitment Discount Plan (as specified in Section 25.1 following), the Channel Termination nonrecurring charge also applies. (C)

Note: See Section 19 following for further information.

© 2022 Frontier Communications Parent, Inc. All rights reserved

7. Special Access Service (Cont'd)

7.4 Rate Regulations (Cont'd)

7.4.1 Types of Rates and Charges (Cont'd)

(C) Nonrecurring Charges (Cont'd)

(2) Installation of Optional Features and Functions

Separate nonrecurring charges apply for the installation of some of the optional features and functions available with Special Access Service. Except for SVS Video Bridging, the charge applies whether the feature or function is installed coincident with the initial installation of service or at any time subsequent to the installation of the service. The charge for SVS Video Bridging applies only when the optional feature or function is installed at any time subsequent to the installation of service.

Some optional features for which separate nonrecurring charges apply are:

- Voice Grade Data Capability
- Voice Grade Telephoto Capability
- Program Audio Gain Conditioning
- Program Audio Stereo
- Wideband Data Transfer Arrangement
- SVS Video Bridging

(3) Service Changes

Service changes are changes to existing (installed) services which do not result in either a change in the minimum period requirements as set forth in 5.2.5 preceding (i.e., change from one type of Special Access Service to another or a change from one type of channel termination to another) or a change in the physical location of the point of termination at a customer designated premises. Changes in the type of service (i.e. type of service termination), Collocated Interconnection Cross-Connect Service or SPOT Bay Frame and Terminations, or in the type of High Capacity multiplexer (i.e., DS1 to Voice to DS1 to Digital) are treated as disconnects and starts. Changes in the physical location of the point of the termination at the customer premises are treated as moves and are described and charged for as set forth in 7.4.5 following. Certain changes in the physical location of the point of termination in a wire center are treated as rearrangements and are described and charged for as set forth in 7.4.1(C)(4) following.

The charge to the customer for a service change is dependent on whether the change is administrative only in nature or involves actual physical change to the service.

© 2022 Frontier Communications Parent, Inc. All rights reserved

7. Special Access Service (Cont'd)

7.4 Rate Regulations (Cont'd)

7.4.1 Types of Rates and Charges (Cont'd)

(C) Nonrecurring Charges (Cont'd)

(3) Service Charges (Cont'd)

Administrative changes will be made without charge(s) to the customer. Such changes require the continued provision and billing of the Access Service to the same customer (i.e., same customer remains responsible for all outstanding indebtedness for the Access Service). Administrative changes are as follows:

- Change of customer name (i.e., the customer of record does not change but rather the customer of record changes its name -- e.g., AT&T-Long Lines to AT&T Communications),
- Change of customer or customer's end user premises address when the change of address is not a result of a physical relocation of equipment,
- Change in billing data (name, address, or contact name or telephone number),
- Change of agency authorization,
- Change of billing account number,
- Change of customer test line number,
- Change of customer or customer's end user contact name or telephone number,
- Change of jurisdiction, and
- Change of customer-designated circuit identification at customer's request.

All other service changes will be charged for as follows:

- If the change involves the addition of another leg to an existing multipoint service, the nonrecurring change charge for the channel termination rate element will apply. The charge will apply only for the leg that is being added.

- If the change involves the addition of an optional feature or function which has a separate nonrecurring charge, that nonrecurring charge will apply.

© 2022 Frontier Communications Parent, Inc. All rights reserved

7. Special Access Service (Cont'd)

7.4 Rate Regulations (Cont'd)

7.4.1 Types of Rates and Charges (Cont'd)

(C) Nonrecurring Charges (Cont'd)

(3) Service Changes (Cont'd)

- If the change involves changing the type of signaling on a Voice Grade service, a charge equal to the Voice Grade channel termination rate element first nonrecurring change charge will apply. The charge will apply per service termination affected.

- If the change involves the addition of B8ZS and/or ESF options to an existing high capacity DS1 service, or the addition of a B8ZS to an existing high capacity DS3 service, a charge equal to the channel termination first non-recurring change charge will apply for each channel termination converted. This rate application does not apply when either of these options are initially ordered with the service.

- A change from a two-point Special Access Service without bridging to multipoint service or from a multipoint to two-point Special Access Service without bridging will be treated as discontinuance and installation of service.

- A change from a DS3 High Capacity electrical interface to an optical interface or a change from an optical interface to an electrical interface will be treated as a discontinuance and installation of service.

- For all other changes, including the addition of optional features without separate nonrecurring charges, a charge equal to a channel termination rate element first nonrecurring change charge will apply. Only one such charge will apply per service, per charge.

- For changes involving the screening, or other end office features, associated with WATS Access Line Service, the rearrangement charge specified in 6.8.1(C)(2) preceding applies.

© 2022 Frontier Communications Parent, Inc. All rights reserved

7. Special Access Service (Cont'd)

7.4 Rate Regulations (Cont'd)

7.4.1 Types of Rates and Charges (Cont'd)

(C) Nonrecurring Charges (Cont'd)

(4) Service Rearrangements

Rearrangement charges apply as specified in 7.5 on a per-termination basis for the following service rearrangements:

a) rearranging an existing subtending service from one port to another in the same multiplexer;
b) rearranging an existing subtending service from one multiplexer to another like multiplexer in the same wire center;
c) rearranging an existing service into a high capacity service multiplexer in the same wire center;
d) rearranging an existing service into Reconfigure Service, in the same wire center;
e) rearranging an existing service to a Collocated Interconnection Cross-Connect Service or SPOT Bay Frame and Terminations in the same wire center;
f) rearranging a Collocated Interconnection Cross-Connect Service or SPOT Bay Frame and Terminations to a full point-to-point Special Access Service in the same wire center; and
g) rearranging an existing service from a facility of one service provider to a like facility of another service provider in the same wire center, even when a change in the customer of record is necessary.

When services are rearranged as described above, the "Additional" level of price for the Rearrangement Charges may apply to all such rearranged services beyond the first without regard to their end-point locations, so long as they are all of the same service type, have the same date due, and are all being rearranged to the same multiplexer or Reconfigure Service as the service which is incurring the associated "First" Rearrangement Charge.

© 2022 Frontier Communications Parent, Inc. All rights reserved

7. Special Access Service (Cont'd)

7.4 Rate Regulations (Cont'd)

7.4.1 Types of Rates and Charges (Cont'd)

(C) Nonrecurring Charges (Cont'd)

(4) Service Rearrangements (Cont'd)

When a service is rearranged, existing multiplexed services, if any, subtending the rearranged service will be treated as administrative changes unless the customer changes service type. If the service type changes, a charge equal to the nonrecurring (i.e., installation) charge for the new type of service channel termination rate element will apply.

(5) Non-Standard Premises (NSP) Connection

A NSP Connection Charge will apply when DS1, DS3 or DDS is first installed at a non-standard premises except when Special Construction has already been assessed to such premises for the provision of Special Access Service to that Non-Standard Premises. The NSP Connection Charge covers the termination of the transmission facility from the serving wire center of the customer designated premises to the NSP and development of a demarcation point.

The charge will apply per customer per NSP for the first Company provided Special Access service only. Any additional Special Access services ordered to the same NSP by the same customer will not be subject to the NSP Connection Charge. The NSP Connection Charge, set forth in Section 7.5.11 following, applies in addition to the nonrecurring charges for the associated channel termination rate element.

When a customer request for service at a NSP require the installation of more than 3,000 feet of cable between the serving wire center of the customer designated premises and the NSP and/or more than $1,000.00 in contracting services (e.g., trenching, rodding, boring, placing conduit, handholes and poles, obtaining permits, etc.), such installation will be subject to the provisions of Section 5.1.3 preceding; Special Construction charges will apply instead of the NSP Connection Charge.

© 2022 Frontier Communications Parent, Inc. All rights reserved

7. Special Access Service (Cont'd)

7.4 Rate Regulations (Cont'd)

7.4.1 Types of Rates and Charges (Cont'd)

(C) Nonrecurring Charges (Cont'd)

(6) Coordinated Retermination

For 1.544 Mbps/DS1 High Capacity, 44.736 Mbps/DS3 High Capacity (excluding Short-Term DS3) moves of a primary circuit termination from one Telephone Company Central Office to another Telephone Company Central Office, the customer may pay a Coordinated Retermination Charge in lieu of treating the move as a discontinuance and start of service. The Coordinated Retermination Charge applies per circuit or DS1/DS3 equivalent circuit reterminated. The Telephone Company will coordinate the work activities required in order to minimize the length of time the service being moved is unavailable. Monthly rates will apply as if the circuit remained in service with no disruption. There will be no change in minimum period requirements. No termination liabilities will apply except where the retermination eliminates chargeable services such as IOF mileage or primary premises Channel Terminations for which specific termination liabilities exist. (M) (M)

Certain material on this page formerly appeared on page 7-212.

© 2022 Frontier Communications Parent, Inc. All rights reserved

7. Special Access Service (Cont'd)

7.4 Rate Regulations (Cont'd)

7.4.2 Surcharge for Special Access Service

(A) General

Special access services provided under this Guide may be subject to the monthly Special Access Surcharge.

(B) Application

(1) The Special Access Surcharge will apply to each interstate Special Access Service that terminates on an end user's PBX or other device where, through a function of the device, the Special Access Service interconnects to the local exchange network. Interconnection functions include but are not limited to wiring and software functions, bridging, switching or patching of calls or stations. The Surcharge will apply irrespective of whether the interconnection function is performed in equipment located at the customer's premises or in a Centrex Co-type switch.

(2) Special Access Service will be exempted from the Surcharge by the Telephone Company upon receipt of the customer's written certification for the following Special Access Service terminations:

(a) an open-end termination in a Telephone Company switch of an FX line, including CCSA and CCSA-equivalent ONALs; or

(b) an analog channel termination that is used for radio or television program transmission; or

(c) a termination used for TELEX service; or

a termination that by the nature of its operating characteristics could not make use of Telephone Company common lines; or

(e) a termination that interconnects either directly or indirectly to the local exchange network where the usage is subject to Carrier Common Line charges* such as, where the private line facility access only FGA and no local exchange lines, or private line facility between customer points of termination, or private line facility connecting CCSA or CCSA-type equipment (inter-machine trunks); or

* Resellers of WATS Access Line Service may be exempted from paying CCL Charges during the transition period of June 1, 1986 to January 1, 1987. However, they must certify for exemption of the Special Access Surcharge on the WAC.

© 2022 Frontier Communications Parent, Inc. All rights reserved

7. Special Access Service (Cont'd)

7.4 Rate Regulations (Cont'd)

7.4.2 Surcharge for Special Access Service (Cont'd)

(B) Application (Cont'd)

(f) a termination that the customer certifies to the Telephone Company is not connected to a PBX or other device that has not been blocked by either hardware or software partitioning restrictions from connecting the private line facility to a local exchange subscriber line.

(g) A termination of WATS Access Line Service which is used for resold WATS.

(C) Exemption of Special Access Service

(1) Special Access Services which are terminated as set forth in 7.4.2(B) preceding will be exempted from the Special Access Surcharge if the customer provides the Telephone Company with written exemption certification. The certification may be provided to the Telephone Company (1) at the time the Special Access Service is ordered or installed; (2) at such time as the service is reterminated to a device incapable of interconnection to local exchange facilities, or (3) at such time as the service becomes associated with a Switched Access Service that is subject to Carrier Common Line Charges.

(2) The exemption certification is to be provided by the customer ordering the services. The certification must be signed by the customer or authorized representative and include the category of exemption, as set forth in 7.4.2 (B) (2) preceding, for each termination, and the date which the exemption is effective.

(3) The customer shall also notify the Telephone Company when an exempted Special Access Service is changed or reterminated such that the exemption is no longer applicable.

(4) The Telephone Company will work cooperatively with the customer to resolve any questions regarding the exemption certification. However, the Telephone Company reserves the right to request additional information from the customer, when necessary, to assure qualifications for exemption of the Surcharge are met. In addition, the Telephone Company may withhold exemption of the service until the dispute is resolved.

(5) Any WATS resellers who had WATS lines in service as of March 13, 1986 will be exempted from the Special Access Surcharge for those lines only during the transition period of June 1, 1986 to January 1, 1987.

© 2022 Frontier Communications Parent, Inc. All rights reserved

7. Special Access Service (Cont'd)

7.4 Rate Regulations (Cont'd)

7.4.2 Surcharge for Special Access Service (Cont'd)

Rate Regulations

(1) The Surcharge applies to each channel of a Special Access Service and per voice grade equivalent service derived from a Special Access Service as shown in the following example:

Special Access Service	Voice Grade Equivalent		Surcharge		Monthly Charge
DS1	24	X	$25	=	$600.00

One Surcharge will apply for each termination of a multipoint Special Access Service at a customer's designated premises.

(2) The Telephone Company will bill the appropriate Special Access Surcharge to the ordering customer for each interstate Special Access Service installed unless exemption certification is provided as set forth in 7.4.2 (C) preceding.

(3) If a written certification is not received at the time the Special Access Service is obtained, the Surcharge will be applied. Exempt status will become effective on the certification date indicated by the customer, subject to the regulations set forth in (4) following.

(4) Crediting the Surcharge

Payment of any Special Access Surcharge billed on WATS Access Lines, in service as of June 1, 1986, may be deferred, without penalty, for up to ninety (90) days from the date of the first bill rendered for the Special Access Surcharge.

If appropriate exemption certification is not received by the Telephone Company by the end of the ninety (90) days deferral period, the billed Special Access Surcharges will become due. These charges, if unpaid, will be subject to a late payment charge as set forth in Section 2.4.1 (B)(3) preceding.

The Telephone Company will cease billing the Special Access Surcharge when certification, as set forth in 7.4.2 (C) preceding, is received. If the status of the Special Access Service was changed prior to receipt of the exemption certification, the Telephone Company will credit the customer's account, not to exceed ninety (90) days, based on the effective date of the change as specified by the customer in the letter of certification.

© 2022 Frontier Communications Parent, Inc. All rights reserved

7. Special Access Service (Cont'd)

7.4 Rate Regulations (Cont'd)

7.4.3 Message Station Equipment Recovery Charge

The Message Station Equipment Recovery Charge is a charge to recover that portion of message station equipment that is assigned to Special Access Service.

Pursuant to CC Docket No. 83-1145 Memorandum Opinion and Order adopted by the Federal Communications Commission on November 8, 1984 and released on November 9, 1984, this charge is assessed only to those customers to which the Special Access Surcharge applies. The rate for the Message Station Equipment Recovery Charge is set forth in 7.5.13 following.

Payment of any Message Station Equipment Recovery Charge billed on WATS Access Lines, in service as of June 1, 1986, may be deferred, without penalty, for up to ninety (90) days from the date of the first bill rendered for the Message Station Equipment Recovery Charge.

If appropriate exemption certification is not received by the Telephone Company by the end of the ninety (90) days deferral period, the billed Message Station Equipment Recovery Charge will become due. These charges, if unpaid, will be subject to a late payment charge as set forth in Section 2.4.1 (B)(3) preceding.

© 2022 Frontier Communications Parent, Inc. All rights reserved

7. Special Access Service (Cont'd)

7.4 Rate Regulations (Cont'd)

7.4.4 Minimum Periods

(A) The minimum service period for all services except part-time and occasional Video, Multichannel Video, Serial Component Video Service, Program Audio services, Digital Data Service, Facility Management Service, LAN Extension Service, and DS1 and DS3 High Capacity is one month.

(1) The minimum service period for part-time and occasional Video (Basic, SCVS and DVTS) and Program Audio services is one day (i.e., a continuous 24-hour period, not limited to a calendar day).

(2) The minimum service period for Multichannel Video service, Serial Component Video Service, and Video Switch arrangements is one year.

(3) The minimum service period for DVTS is three months except when 45 Mbps DVTS includes the optional CODEC, then the minimum service period for the 45 Mbps DVTS is one year.

(4) The minimum service period for Digital Data Service and DS1 High Capacity services is two months.

(5) The minimum service period for a DS3 (both electrical and optical interfaces) High Capacity service or a DSSSP that is provided under a month-to-month payment plan is one year.

(6) The minimum service period for Facility Management Service provided on a month-to-month basis is one year.

(7) The minimum service period for LAN Extension Service is 3 years.

(B) The minimum service periods for Dedicated SONET services are set forth as stated below:

Service	Section
DSR	23.1
DSSDP	7.2.14(C)(2)(a)
DSSAN	7.2.14(C)(3)(a)
DSOTS	7.2.14(C)(4)
DSEF	7.2.15(E)
DSBT	8.2(C)(1)
DSSSP	8.3(C)(1)

(C) The minimum service period for Ethernet Private Line is set forth in 7.2.20(E).

The minimum service period for a service that is included in a Commitment Discount Plan is specified in Section 25.1.10 following.

© 2022 Frontier Communications Parent, Inc. All rights reserved

7. Special Access Service (Cont'd)

7.4 Rate Regulations (Cont'd)

7.4.5 Moves

A move involves a change in the physical location of the customer's premises which also involves a connection to a different rate demarcation point.

The charges for the move are dependent on whether the move is to a new location within the same building or to a different building.

(A) Moves Within the Same Building

When the move is to a new location within the same building, the charge for the move will be an amount equal to one half of the first nonrecurring (i.e., installation) charge for the service termination affected. There will be no change in the minimum period requirements.

(B) Moves To a Different Building

Moves to a different building will be treated as a discontinuance and start of service and all associated nonrecurring charges will apply. New minimum period and/or Service Discount Plan requirements will be established for the new services. The customer will also remain responsible for satisfying all outstanding minimum period and/or termination liability charges for the discontinued service except as specified in 25.2.5 following.

Certain material previously found on this page can now be found on Page 7-206.1

© 2022 Frontier Communications Parent, Inc. All rights reserved

7. Special Access Service (Cont'd)

7.4 Rate Regulations (Cont'd)

7.4.6 Mileage Measurement

(A) General

The mileage to be used to determine the monthly rate for the Channel Mileage is calculated on the airline distance between the locations involved, i.e., the serving wire centers associated with two customer designated premises, a serving wire center associated with a customer designated premises and a telephone Company Hub* or two Telephone Company Hubs*. The serving wire center associated with a customer designated premises is the serving wire center from which the customer designated premises would normally obtain dial tone unless Alternate Serving Wire Center is also provided as described in 7.2.9 (7) preceding.

Mileage is shown in 7.5 following in terms of a per mile structure. To determine the rate to be billed, first compute the mileage using the V&H coordinates method, as set forth in the Exchange Carrier Association Tariff F.C.C. No. 4, and apply the rates. When the calculation results in a fraction of a mile, always round up to the next whole mile before applying the rates.

When Hubs* are involved, mileage is computed and rates applied separately for each section of the Channel Mileage, i.e., customer designated premises serving wire center to Hub, Hub to Hub and/or Hub to customer designated premises serving wire center. However, when any service is routed through a Hub for purposes other than customer specified bridging, multiplexing or Reconfigure Service (e.g., the Telephone Company chooses to so route for test access purposes), rates will be applied only to the distance calculated between the serving wire centers associated with the customer designated premises.

* Includes connection to or between locations where Dedicated SONET Broadband Transport (DSBT) multiplexing capability occurs as described in Section 8.2(B)(3) following.

© 2022 Frontier Communications Parent, Inc. All rights reserved

7. Special Access Service (Cont'd)

7.4 Rate Regulations (Cont'd)

7.4.7 Facility Hubs*

A customer has the option of ordering Voice Grade facilities or analog or digital high capacity facilities (i.e., Group, Supergroup, Mastergroup, DS1, DS1C, DS2, DS3 or DS4) to a facility Hub for distributing or channelizing to individual services requiring lower capacity facilities (e.g., Telegraph, Voice, Program Audio, etc.), except for Video and Program Audio Services which are always ordered to a hub although they do not require multiplexing.

When analog or digital high capacity facilities are provided between a customer premises and a facility Hub, the facility will not be considered an end-to-end service until an associated channelized service is installed. The facility Hub will not be considered as a customer premises.

Different locations may be designated as Hubs for different facility capacities, e.g., multiplexing from digital to digital may occur at one location while multiplexing from digital to analog may occur at a different location. When ordering the customer will specify the desired multiplexing Hub(s) selected from the Exchange Carrier Association Tariff F.C.C. No. 4. This Guide identifies the type(s) of multiplexing functions which are available and the serving wire centers at which they are available. Locations that provide multiplexing of Dedicated SONET Broadband Transport (DSBT) Services are described in Section 8.2(B)(3) following.

Some of the types of multiplexing available include the following:

- from higher to lower bit rate
- from higher to lower bandwidth
- from digital to voice frequency channels

End to end services may be provided on channels of these facilities to a Hub. The transmission performance for the end to end service provided between customer designated premises will be that of the lower capacity or bit rate. For example, when a 1.544 Mbps facility is multiplexed to voice frequency channels, the transmission performance of the channelized services will be Voice Grade, not High Capacity.

* Includes connection to or between locations where Dedicated SONET Broadband Transport (DSBT) multiplexing capability occurs as described in Section 8.2(B)(3) following.

© 2022 Frontier Communications Parent, Inc. All rights reserved

7. Special Access Service (Cont'd)

7.4 Rate Regulations (Cont'd)

7.4.7 Facility Hubs* (Cont'd)

The Telephone Company will commence billing the monthly rate for the facility to the Hub on the date specified by the customer on the service order. Additional individual services utilizing these facilities may be installed coincident with the installation of the facility to the Hub, or may be ordered and/or installed at a later date, at the option of the customer. The customer who orders the High Capacity Service must order all associated individual Access Channelized Services. The customer will be billed for a Voice Grade or a high capacity analog or digital Channel Termination, Channel Mileage (when applicable), and the multiplexer at the time the facility is installed. Additional individual service rates (by service type) will apply for a Channel Termination and for additional Channel Mileage (as required) for each subsequent channelized service. These will be billed to the customer as each individual service is installed.

Cascading multiplexing occurs when a high capacity analog or digital channel is de-multiplexed to provide channels with a lesser capacity and one of the lesser capacity channels is further de-multiplexed. For example, a Supergroup facility is de-multiplexed to five Group facilities and then one of the Group facilities is further de-multiplexed to individual Voice Grade channels.

When cascading multiplexing is performed whether in the same or a different Hub, a charge for the additional multiplexing unit also applies. When cascading multiplexing is performed at different Hubbing locations, Channel Mileage Charges also apply between the Hubs.

In the cascading multiplexing arrangements described above, specific NCI codes may be used in conjunction with the individual multiplexed services at the Hub in order to identify the technology hierarchy employed in the total service arrangement.

Although not requiring multiplexing, the Telephone Company will designate certain Hubs for Video and Program Audio Services. Full-time service will be provided between a customer designated premises and a Hub and billed accordingly at the monthly rates forth in 7.5.4 and 7.5.5 following for a Channel Termination, Optional Features and Functions, and Channel Mileage, as applicable. The customer may order part-time and occasional Video and Program Audio services as needed between that Hub and a second customer designated premises. The rate elements required to provide the part-time or occasional service (i.e., Channel Termination, Optional Features and Functions, and Channel Mileage, as applicable) will be billed at daily rates for the duration of the service requested.

* Includes connection to or between locations where Dedicated SONET Broadband Transport (DSBT) multiplexing capability occurs as described in Section 8.2(B)(3) following.

© 2022 Frontier Communications Parent, Inc. All rights reserved

7. Special Access Service (Cont'd)

7.4 Rate Regulations (Cont'd)

7.4.8 Shared Use Analog and Digital High Capacity Services (T)

Shared Use refers to a rate application applicable only when the customer orders High Capacity Special Access facilities between a customer designated premises and a Telephone Company hub where the Telephone Company performs multiplexing/de-multiplexing functions and the same customer then orders the derived channels as Special and Switched Access Services. If the customer has Switched Access Service between a customer designated premises and an end office that is multiplexed at a Telephone Company hub and subsequently orders the derived channels as Special and Switched Access Service, rates and charges will apply as if the service were ordered as shared use.

Shared use of Special Access Cross Connect and Expanded Interconnection service are not available.

Except as noted above, the High Capacity facility will be ordered, provided and rated as Special Access Service (i.e., Channel Termination, Channel Mileage, as appropriate, and Multiplexing Arrangement). The nonrecurring charge that applies when the shared use facility is installed will be the nonrecurring charge associated with the appropriate Special Access High Capacity Channel Termination. Rating as Special Access will continue until such time as the customer chooses to use a portion of the available capacity for Switched Access Service. Individual service (i.e., Switched or Special Access) nonrecurring charges will not apply to the individual channels of the shared use facility.

When Special Access Service is provided utilizing a channel of the shared use facility to a hub, High Capacity rates and charges will apply for the facility to the hub, as set forth preceding, and individual service rates and charges will apply from the hub to the customer designated premises. The rates and charges that will apply to the portion from the hub to the customer designated premises will be dependent on the specific type of Special Access Service that is provided. The applicable rates and charges will include a Channel Termination and Channel Mileage, if applicable. Rates and charges for optional features and functions associated with the service, if any, will apply for the appropriate channel type. (T)

© 2022 Frontier Communications Parent, Inc. All rights reserved

7. Special Access Service (Cont'd)

7.4 Rate Regulations (Cont'd)

7.4.8 Shared Use Analog and Digital High Capacity Services (Cont'd) (T)

As each individual channel is activated for Switched Access Service, the High Capacity Special Access Channel Termination, Channel Mileage, and Multiplexing rates will be reduced accordingly (e.g., 1/24th for a DS1 service, etc.). Switched Access Service rates and charges, as set forth following, will apply for each channel that is used to provide a Switched Access Service. Additionally, the Switched Access Service Entrance Facility, Direct Trunked Transport, and Multiplexing charges, if applicable, will be reduced by multiplying their respective rates by the ratio of derived Switched Access Service channels to the total number of Voice Grade channels that can be derived.

The customer must place an order for each individual Switched or Special Access Services utilizing the Shared Use Facilities and specify the channel assignment for each such service. (T)

7.4.9 Reserved

© 2022 Frontier Communications Parent, Inc. All rights reserved

7. Special Access Service (Cont'd)

7.4 Rate Regulations (Cont'd)

7.4.10 Special Access Rate Exceptions

When providing the Special Access portion of an FX/ONAL service to connect a customer to the FX/ONAL dial tone office, for jointly provided corridor service, only the channel mileage rate element, a single channel termination and optional features and functions will apply. Regulations as specified in 2.4.6 apply in determining the percent of channel mileage applicable in the dial tone office LATA. In addition, and where appropriate, all other rate elements normally applicable to Special Access Service(s) as specified in this Guide may apply.

Services provided by the Telephone Company to connect a customer location to an Internet Protocol Routing Service Concentrator or Packet Data Network Switch will be rated as channel termination and, when the customer is normally served by a different serving office, channel mileage applies from the normal serving office to the concentrator or the switch serving office. No channel termination applies at the switch serving office.

Services provided by the Telephone Company to connect a customer location to an Interim Exchange Access Switched Multi-Megabit Data Service Switch (I-XASMDS) and a Interexchange Access Frame Relay Switch (XA-FRS) will be rated as a channel termination. A channel termination at the I-XASMDS and the XA-FRS switch serving office and channel mileage from the customer serving wire center to the I-XASMDS and XA-FRS switch are not applicable under the provisions of this service.

Certain terms and conditions and rates associated with the provision of Telephone Company services may be waived or excepted. These individual instances of terms and/or conditions exemptions are contained in Section 7.4, following.

7.4.11 WATS Access Line Service

A WATS Access Connection is only provisioned between a customer's premises and a WATS Serving Office (WSO) and there is only one application of the WATS Access Connection Charge. However, there can be additional secondary connections (USOC XEE), which are individual WACs and each will receive the same WAC Connection Charge. These WAC Secondary Connections must always be provisioned via C.O. Bridging.

© 2022 Frontier Communications Parent, Inc. All rights reserved

7. Special Access Service (Cont'd)

7.4 Rate Regulations (Cont'd)

7.4.12 Reserved (C)

© 2022 Frontier Communications Parent, Inc. All rights reserved

7. Special Access Service (Cont'd)

7.4 Rate Regulations (Cont'd)

7.4.12 Reserved (Cont'd) (C)

© 2022 Frontier Communications Parent, Inc. All rights reserved

7. Special Access Service (Cont'd)

7.4 Rate Regulations (Cont'd)

7.4.13 DS3 High Capacity Services #

(A) Payment Plans and Minimum Periods #

Recurring charges for DS3 Services are rated and charged monthly for all commitment plans (as set forth in 25.1 following); Month-to-Month, 3 and 5-year Term Pricing Plans (TPPs). TPPs are provided with Base Rates as described in Section (B) following and as set forth in 7.5.9 following.

The minimum service period for DS3 is 12 months, except when a DS3 is ordered on a short term basis. Short-Term DS3 Service is described in paragraph (F) of this section, 7.4.13.

Additionally, the optional feature, DS3 to DS1 Central Office Multiplexing, is also available on a 3 or 5-year Term Pricing Plan,. When ordered, a 3 or 5 year TPP for the DS3/DS1 multiplexing feature must have the same term period as the associated service, and it is always assigned an expiration date that is coterminous with the associated service.

At the end of a term plan, the customer will not be eligible to receive discounted monthly charges. TPPs can no longer be renewed. (C)

Should a customer terminate service prior to completing the minimum period or the plan term period, termination liability may be applicable. Termination liability is assessed on channel terminations, fixed and per mile mileage, and multiplexing rate elements. Liability (C)
for terminations at a primary premises is calculated based upon 1.) the rate band determined (C)
by the last count taken for circuits billed the tapered schedule rate or 2.) the month to month (C)
Per DS3 CT rate, with the calculation using whichever rate was billed. A customer who (C)
downgrades a term plan to shorter duration, changes the system configuration (i.e., Optical to Electrical) or disconnects the service will be treated as having terminated the service.

(D)

(B) Base Rates #

The rates charges under 3-Year and 5-year TPPs are based upon Base Rates as specified in Section 7.5.9 following. Such rates may change during the commitment period, but in no case will the Base Rate exceed the non-discounted monthly rate for the service. In order to calculate the rates the customer will pay, the following discount percentages are applied to the Base Rates Monthly Rate Per CT for 3-Year and 5-Year TPPs for DS3 High Capacity Channel Terminations, Channel Mileage, and Optional Features and Functions. Discount percentages are not applied to nonrecurring rates.

3-Year	10%
5-Year	35%

Effective November 19, 2021, DS3 Term Pricing Plans (TPP) are no longer permitted. DS3 TPP in effect as of November 19, 2021 may continue the existing term but will not be eligible to extend, renew, reenroll in, convert to a new term period, or in any other way continue their existing plan beyond its current expiration. At expiration of a DS3 TPP, the service will convert to the Month to Month Rate. If at any time an existing customer terminates its DS3 TPP, the customer may not re-subscribe to the plan

© 2022 Frontier Communications Parent, Inc. All rights reserved

7. Special Access Service (Cont'd)

7.4 Rate Regulations (Cont'd)

7.4.13 DS3 High Capacity Services (Cont'd) # (C)

(C) Discontinuance Without Liability

A customer may discontinue a term plan without penalty by entering the same system configuration into a new term plan of equal or greater length prior to the expiration of the plan.

A customer may discontinue a term plan without liability if the service is upgraded (changed to a higher bandwidth/capacity service or to a higher speed service) through aggregation of existing services or service additions, and agrees to a new term plan of equal or greater length. Any additional services or circuits added to make up the upgrade will be subject to all applicable nonrecurring charges.

Termination liability will not apply when a customer meets the requirements for "portability". Portability is the replacement of a service under a DS3 Term Pricing Plan (TPP) with another service for the balance of the TPP commitment period. Portability requirements are as follows:

- The TPP service to be discontinued must have been in service for a minimum of 1 year.
- The replacement service must be of the same speed or type, and must not already be in a Term Pricing Plan.
- The orders to accomplish the replacement are placed with the Telephone Company at the same time with due dates within 90 days of each other, and are related by a Related Purchase Order Number.
- The quantities associated with the replacement are equal to or greater than the disconnected service.
- The replacement service is subject to any applicable nonrecurring charges.

Service Offer is limited. See Footnote on page 7-221 (N)

© 2022 Frontier Communications Parent, Inc. All rights reserved

7. Special Access Service (Cont'd)

7.4 Rate Regulations (Cont'd)

7.4.13 DS3 High Capacity Services (Cont'd)#

(C) Reserved For Future Use (C)

.

Discontinuance With Liability

For service discontinued prior to completion of the minimum service period, the customer will be liable for 100% of the total monthly charges for the unexpired portion. Total monthly charges are calculated based upon 1.) the rate band determined by the last count taken for circuits billed the tapered schedule rate or 2.) the month to month Per DS3 CT rate, with the calculation using whichever rate was billed.

DS3 Term Pricing Plans are provided in conjunction with an Early Termination Provision (ETP) agreement. ETP is calculated using either of the following options that provides the customer with the lowest termination liability.

Option I

- In addition to the minimum period liability of 100%, the customer will be liable for 15% of the total monthly charges for the remaining portion of the term plan. (C) (C) (C) (C)

Service Offer is limited. See Footnote on page 7-221

© 2024 Frontier Communications Parent, Inc. All rights reserved

7. Special Access Service (Cont'd)

7.4 Rate Regulations (Cont'd)

7.4.13 DS3 High Capacity Services (Cont'd)#

Discontinuance With Liability (Cont'd)

Option II

In addition to the minimum period liability of 100%, the following applies:

- Where there is neither a basic Month-to-Month rate nor a TPP period less than the actual time the service has been in effect, Option 1 applies.

- Where there is no TPP period less than the actual time the service has been in effect, the termination liability charge will be the difference between the full basic Month-to-Month rate and the selected TPP monthly rate for the period the plan has been in effect after the minimum period.

- Where there is a TPP period less than the actual time the service has been in effect, the termination liability charge will be the difference between the monthly rate for the highest TPP period that could have been satisfied prior to discontinuation of the service and the monthly rate for the selected commitment period multiplied by the actual number of months the plan has been in effect after the minimum period.

Notice of discontinuance must be given by the customer at least three months prior to actual discontinuance. Monthly charges will apply for a period of three months from the date the Telephone Company receives discontinuance notification or until the requested discontinuance date, whichever period is longer.

(E) Shared Use

DS3 service arrangements in shared use situations must have at least one channel of Special Access service to be billed as a Special Access facility.

Service Offer is limited. See Footnote on page 7-221 (N)

© 2022 Frontier Communications Parent, Inc. All rights reserved

7. Special Access Service (Cont'd)

7.4 Rate Regulations (Cont'd)

7.4.13 DS3 High Capacity Service (Cont'd) #

(F) Short-Term DS3 Service

Short-Term DS3 is provided for customers who require a DS3 Service for a short duration of 30 days or less, such as for a convention, trade show, or demonstration.

In order to qualify as a Short Term DS3 Service, the connect and disconnect orders must be placed by the customer at the same time. And, the disconnect date must be no more than 30 calendar days after the connect date. One renewal of 30 days or less is available provided the request is received prior to the disconnect date of the initial period. Extensions of the disconnect date beyond this 60-day period will not be permitted.

Short-Term DS3 Service is provided where facilities permit and is subject to a full month's billing for each 30-day period regardless of time in service. In addition, special construction charges for nonreusable equipment or additional labor costs apply. A separate and distinct rate applies for the channel termination of a Short-Term DS3. Rates for Short-Term DS3 service are provided in Section 7.5.9(A)(1)(c).

Service Offer is limited. See Footnote on page 7-221 (N)

© 2022 Frontier Communications Parent, Inc. All rights reserved

7. Special Access Service (Cont'd)

7.4 Rate Regulations (Cont'd)

7.4.14 Shared Network Arrangement

Each customer entering into a Shared Network Arrangement is solely responsible to the Telephone Company for charges associated with that customer's portion of the shared network. Disconnection of service by the host subscriber does not relieve another user of the network of any obligation to pay access charges associated with the portion of the shared network to which that user subscribes. Billing for services and facilities will continue until a disconnect request from the service user has been received by the Telephone Company. The host subscriber is solely responsible for notifying the connecting service user in the event of disconnection of the host service which affects that portion of the shared network service to which the user has subscribed.

For administrative purposes, one "Arrangement" under the Shared Network Arrangement offering shall be limited to the agreement between one Host Subscriber and one Service User permitting the Service User to connect a specified number of subtending circuits to one specified multiplexer on the Host's service. Agreements between one Host Subscriber and two (or three, etc.) Service Users shall be deemed to comprise two (or three, etc. respectively) separate "Arrangements." However, an agreement to expand the scope of an existing Arrangement by subsequently increasing the number of subtending circuits on the same multiplexed shall not constitute a new or separate "Arrangement."

A Shared Network Arrangement shall be established between a Host Subscriber and a Service User upon the completion of the service order for the first circuit(s) in the arrangement. No Shared Network Arrangement shall be deemed to be in effect until at least one subtending circuit has been installed for the Service User. A Shared Network Arrangement shall be deemed cancelled when the last subtending circuit has been disconnected.

A Processing Charge does not apply for Service User Integrated Optical Service Rider order(s) processed for a Shared Billing Arrangement. A Processing charge will apply for handling all other service orders in a Shared Network Arrangement. The Processing Charge is contained in Section 7.5.9(C), and applies in addition to all other applicable rates and charges.

© 2022 Frontier Communications Parent, Inc. All rights reserved

7. Special Access Service (Cont'd)

7.4 Rate Regulations (Cont'd)

7.4.15 Lightwave Facilities

(A) Service Period

Lightwave Facilities are offered only on a month-to- month basis with a one year minimum service period. A customer who moves their facility to another premises, changes from a 4 fiber service to a 12 fiber service or the reverse, or changes the facility to a service (i.e., Lightwave Facilities to a high capacity DS3 service) will be treated as having terminated as having terminated the facility.

For service discontinued prior to the end of the one year service period, the customer will be liable for 100% of the total monthly charges at the then-prevailing rate for the unexpired portion of the minimum service period.

Notice of discontinuance must be given by the customer at least thirty (30) business days prior to actual discontinuance. Monthly charges will apply for a period of thirty (30) business days from the date the Telephone Company receives discontinuance notification or until the requested discontinuance date, if longer than thirty (30) buisness days. (C)

(B) Discontinuance Without Liability

All Lightwave Facilities termination charges shall be waived and no charges or penalties shall apply if the Lightwave Facilities offering is withdrawn from the tariff by the Telephone Company.

(C) Rate Categories

There are only two basic rate categories which will apply to Lightwave Facilities: 1) a nonrecurring installation charge applied per point of termination and 2) a Per Mile-Channel Mileage charge which is based on actual facility route miles, or fraction thereof, and is measured from premises to premises. Calculations resulting in a fraction of a mile will be rounded up to a whole number. These rates are as shown in 7.5.10, following. Actual provisioning of end-to-end Lightwave Facilities may differ from the description of rate categories as stated in Section 7.1.2, preceding.

© 2024 Frontier Communications Parent, Inc. All rights reserved

7. Special Access Service (Cont'd)

7.4 Rate Regulations (Cont'd)

7.4.15 Lightwave Facilities (Cont'd)

Rate Application

Lightwave Facilities are only provisioned in point-to-point configurations which connect two customer designated premises.

(E) Facilities Conversion

ICB dark fiber facilities which are converted to Lightwave Facilities will not be re-engineered or modified in any way. Currently existing multimode ICB dark fiber facilities will be left in-place and not replaced. Existing multimode facilities which remain in service after the expiration of their associated ICB will be rated at the general Lightwave Facilities rates and will be subject to the same terms and conditions.

Currently existing dark fiber offerings which are converted will be charged based upon the number of fibers involved; e.g., existing customers having three (3) fibers or less will be rated at the four strand fiber rates. New orders for Lightwave Facilities will be permitted in quantities of four and twelve fiber arrangements, or multiples thereof, only.

© 2022 Frontier Communications Parent, Inc. All rights reserved

7. Special Access Service (Cont'd)

7.4 Rate Regulations (Cont'd)

7.4.16 Video Service Arrangements#

(A) Minimum Service Period

Multichannel Video Service and Advanced Video Switching provisioned as a dedicated switching arrangement are only offered on a long term basis, 5 and 10-year term plans and a 10-year rate stability plans (RSP). **Effective April 20, 2002, the 10-year RSP for the Video Switch is not available to new customers).** The 10-year rate stability plan guarantees that rates will not increase during the plan period but may decrease. The minimum service period is one year for all service periods and all are subject to termination liability.

At the expiration of an existing term or payment plan, customers will be automatically converted to a new one year minimum service period at the then prevailing rate unless the customer gives written notice within 90 days of the expiration of the existing plan period to the telephone company of its intention to terminate service. After the expiration of an existing service period, contracts can only be renewed for minimum one year term period.

Advanced Video Switching provisioned through a shared switching arrangement is offered on a month-to-month basis or under 1-year, 3-year, and 5-year term plans. The minimum service period for month-to-month service is one month. The minimum service period for term plans is one year and service provided under a term plans is subject to termination liability.

(B) Terms and Conditions

For a Multichannel Video Service, the customer must specify the number of channels per service arrangement. Premises to premises arrangements are available in 3 to 8 channel arrangements; premise to Hub arrangements are available in 4 to 8 channel arrangements.

A customer must maintain the minimum number of channels per Multichannel Video Service arrangement or disconnect the service. Additional channels may be added or deleted during the life of the contract subject only to a one year minimum service guarantee for that particular channel (see termination liability following). All channels associated with a given arrangement are in the same term plan.

A change from Basic Video Service to Multichannel Video Service or vice versa requires a complete disconnect and a new service order for installation.

A move of any video service to another video hub/TVOC will be treated as a disconnect and new service orders.

Effective November 21, 2017, new subscriptions to Video Service Arrangements are no longer permitted. Video Service Arrangements customers subscribed as of November 21, 2017 may continue with their existing subscriptions. If at any time an existing customer terminates its Video Service Arrangements, the customer may not re-subscribe to the plan.

© 2022 Frontier Communications Parent, Inc. All rights reserved

7. Special Access Service (Cont'd)

7.4 Rate Regulations (Cont'd)

7.4.16 Video Service Arrangements# (Cont'd)

(C) Termination Liability

Term and rate stability plans for Multichannel Video and Advanced Video Switching are subject to termination liability for early discontinuance.

With the exception of Advanced Video Switching provisioned through a shared switching arrangement on a month-to-month basis, notice of discontinuance must be given by the customer at least three months prior to actual discontinuance. Monthly charges will apply for a period of three months from the date the Telephone Company receives discontinuance notification or until the requested discontinuance date, whichever period is longer.

(1) Five and Ten-year Term Plans

For contracts discontinued prior to the first year of the initial five or ten year period, the customer will be liable for 100% of the total monthly charges at the then-prevailing rate for the unexpired portion of the first year. In addition the customer will be responsible for 15% of the total monthly charges for the remaining portion of the 5-year period, or 10% of the total monthly charges for the remaining portion of the 10-year period.

For contracts discontinued beyond the first year of the initial contract period, the 5 year plan customer will be liable for 15% and the 10 year plan customer will be liable for 10% of the total monthly charges for the remaining portion of the initial period or of the one-year renewal period as is applicable.

(2) 10-Year Rate Stability

For the Video Switch 10-year RSP Plans, the maximum termination liability is $30,000.00 and is reduced by 1/120th for each month the service has been in effect.

For the 10-year RSP Multichannel Video Service Arrangement, the maximum termination liability for each initial arrangement is $15,000.00 and is reduced by 1/120th for each month this service has been in effect. Additionally, channel terminations subsequently added to the initial arrangement and disconnected prior to the one-year minimum service period are subject to termination liability of 100 percent for the remainder of the minimum period.

Service Availability is limited. Refer to # footnote on page 7-229.

© 2022 Frontier Communications Parent, Inc. All rights reserved

7. Special Access Service (Cont'd)

7.4 Rate Regulations (Cont'd)

7.4.16 Video Service Arrangements# (Cont'd)

Discontinuance Without Termination Liability

Reserved For Future Use (C)

A change to a new Video Service term plan of equal or greater value in revenue than the remainder of the present Multichannel Video term plan will not be subject to termination liability.

Customers who upgrade to a larger Video Switch Arrangement will not be subject to termination liability. However, the upgrade is subject to all applicable nonrecurring charges, and a new service period.

Advanced Video Switching customers who change from a shared switching arrangement to a dedicated switching arrangement will not be subject to termination liability. However, the change is subject to all applicable nonrecurring charges, and a new service period.

Advanced Video Switching customers may at any time prior to the expiration of a 5-year term plan, change to a longer-term plan without termination liability. Time in-service credit for the old/cancelled plan is applied to the new extended plan. The rate for the new longer commitment period applies effective with the first bill date following extension of the commitment period and continue through the remainder of the commitment period of the new term plan. No adjustment for the increased discount associated with the extended plan will be made to the monthly rates already billed on the old/cancelled plan.

Service Availability is limited. Refer to # footnote on page 7-229.

© 2024 Frontier Communications Parent, Inc. All rights reserved

7. Special Access Service (Cont'd)

7.4 Rate Regulations (Cont'd)

7.4.17 Digital Data and DS1 High Capacity Services

(A) Basic Service

The minimum service period for basic Digital Data Service (DDS) and DS1 High Capacity Service (DS1) is two months. When service is disconnected prior to the expiration of the minimum period, charges are applicable for the balance of the two-month minimum period.

Customers may, at any time, change their basic service payment option to a Term Payment Plan without assessment of the minimum period service charge.

(B) Term Pricing Plans (TPP) Description # (C)

Term Pricing Plans are pricing options available to customers who subscribe to specific longer term commitment periods in exchange for reduced monthly rates.

(1) TPPs for Digital Data Services are available in 2, 3, and 5-year commitment periods. DS1 High Capacity Services are available in 2, 3, 5, and 7-year commitment periods.

(2) Customers ordering TPP on or after September 10, 2013 must order all applicable rate elements from the same pricing plan. Customers ordering TPPs prior to September 10, 2013 have the option of purchasing channel terminations under one plan and channel mileage under another plan, or under the basic service plan. TPPs are available subject to the following:

- Digital Data Service plans are applicable to channel terminations and channel mileage. The fixed and per mile rate elements for a given circuit must be included in the same individual Term Pricing Plan.
- Multiple Digital Data Services must be of the same speed in order to be in the same individual Term Pricing Plan.
- DS1 High Capacity Service plans are applicable to channel terminations, associated DS1 Multiplexers (DS1 to Voice, DS1 to Digital, and DS1 to DS0), and channel mileage, fixed and per mile. The fixed and per mile rate elements for a given circuit must be included in the same TPP; the channel termination and associated multiplexer must also be included in the same plan.

Effective November 19, 2021 DS1 Term Pricing Plans (TPP) are no longer permitted. DS1 TPP in effect as of November 19, 2021 may continue the existing term but will not be eligible to extend, renew, reenroll in, convert to a new term period, or in any other way continue their existing plan beyond its current expiration. At expiration of a TPP, the service will convert to the Month to Month Rate. If at any time an existing customer terminates its DS1 TPP, the customer may not re-subscribe to the plan. (N)

Certain material previously appearing on this page currently appears on Page 7-232.1.

© 2022 Frontier Communications Parent, Inc. All rights reserved

7. Special Access Service (Cont'd)

7.4 Rate Regulations (Cont'd)

7.4.17 Digital Data and DS1 High Capacity Services

(B) Term Pricing Plans (TPP) Description # (Cont'd) (C)

(3) Rates for Term Pricing Plans are detailed in Section 7.5.16. Term Pricing Plans do not include optional features except for associated DS1 multiplexing in the DS1 TPPs. Other optional features are available at Basic Service rates.

Term Pricing Plans are not applicable to services in other rate plans, nor are Federal Telecommunications Access Services eligible for TPPs.

(N)

Service Offer is limited. See Footnote on page 7-232

(M) Certain material on this page previously appeared on Page 7-232.

© 2024 Frontier Communications Parent, Inc. All rights reserved

7. Special Access Service (Cont'd)

7.4 Rate Regulations (Cont'd)

7.4.17 Digital Data and DS1 High Capacity Services (Cont'd)

(C) TPP Terms and Conditions #

(1) When requesting a Term Pricing Plan, the customer must specify the length of the desired commitment period and the services which are to be included in the plan.

(2) When requesting any Term Pricing Plan activity regarding channel terminations, the customer must specify by billing account and circuit identification number which circuits are to be affected.

(3) When ordering Term Pricing Plan services prior to September 10, 2013, related rate elements must be ordered under the same plan. For example, both channel terminations and any DS1 associated multiplexing for a given circuit must be in the same plan and have the same service date. Similarly, both rate elements for channel mileage, fixed and per mile, must be in the same plan and have the same service date. For orders received on or after September 10, 2013, all applicable rate elements for a given circuit must be ordered under the same plan.

(4) At the end of a TPP commitment period, the service(s) will be billed at the basic rate unless the customer subscribes to a new TPP.

(5) Termination liability is assessed on channel terminations, fixed and per mile mileage, and multiplexing rate elements.

(6) Reserved For Future Use (C)

Service Offer is limited. See Footnote on page 7-232

(N)

© 2024 Frontier Communications Parent, Inc. All rights reserved

7. Special Access Service (Cont'd)

7.4 Rate Regulations (Cont'd)

7.4.17 Digital Data and DS1 High Capacity Services (Cont'd)

TPP Termination Liability # (C)

(1) A termination liability payment is applicable when a service is disconnected in full or in part prior to the end of the selected commitment period or where the customer fails to comply with the conditions required for a TPP, except as set forth in (E) following.

(2) If the customer requests all channels of a DS1 service to be used for Switched Access, the request will be treated as a disconnect and termination liability will be assessed.

(3) The termination liability payment applies to each channel termination, fixed and per-mile mileage, and multiplexing recurring rate element which is disconnected prior to the expiration of the commitment period of the Term Pricing Plan.

(4) The termination liability charge is calculated as set forth in (a) or (b) following: when calculating termination liability charges, the Telephone Company will apply the option which provides the customer with the lowest termination liability charge.

(a) Option I

For services discontinued within the first year, the customer will be liable for 100% of the total monthly charges for the unexpired portion of the initial 12 months, and 15% of the total monthly charges for the remainder of the TPP commitment period.

For services discontinued after the first 12 months of a plan, customers will be liable for 15% of the total monthly charges for the remaining portion of their Term Pricing Plan commitment period.

Service Offer is limited. See Footnote on page 7-232 (N)

© 2024 Frontier Communications Parent, Inc. All rights reserved

7. Special Access Service (Cont'd)

7.4 Rate Regulations (Cont'd)

7.4.17 Digital Data and DS1 High Capacity Services (Cont'd)

TPP Termination Liability (Cont'd) # (C)

(4) (Cont'd)

(b) Option II

For services discontinued within the first year and prior to the end of the selected commitment period, the termination liability charge will be the difference between the full Basic monthly rates and the TPP monthly rates for the period the plan has been in effect.

For services discontinued after the first 12 months of a plan but prior to the end of the selected commitment period, the following applies:

- Where there is no TPP period less than the actual time the services have been in effect the termination liability charge will be the difference between the full Basic monthly rates and the selected TPP monthly rates for the period the plan has been in effect.

- Where there is a TPP period less than the actual time the services have been in effect, the termination liability charge will be the difference between the monthly rates for the highest TPP period that could have been satisfied prior to discontinuation of the service and the monthly rates for the selected commitment period multiplied by the actual number of months the plan has been in effect.

For example, if a customer subscribes to a 5-year TPP and disconnects service during the thirty-seventh month, the highest TPP period that could have been satisfied is three years. The customer's termination liability would be calculated as follows: (3-year monthly TPP rate - 5-year monthly TPP X 37 months).

Service Offer is limited. See Footnote on page 7-232 (N)

© 2024 Frontier Communications Parent, Inc. All rights reserved

7. Special Access Service (Cont'd)

7.4 Rate Regulations (Cont'd)

7.4.17 Digital Data and DS1 High Capacity Services (Cont'd)

(E) TPP Termination Without Liability #

(1) Reserved For Future Use. (C)

(2) A request to change to a longer commitment period will nullify the current termination liability. All terms and conditions associated with the new TPP will apply.

(3) Termination liability is not applicable if the customer requests to upgrade service to a higher capacity (e.g., DDS to DS1, DS1 to DS3) or a higher speed (2.4 kbps to 4.8 kbps) service and meets all of the following conditions:

- The new service is purchased under a long-term agreement equal to or greater than the commitment period of the service being disconnected.
- The orders for the disconnect of the existing TPP rate elements and the new connect are received by the Telephone Company at the same time, with due dates within 90 days of each other, and are related together by a Related Purchase Order Number (RPON).
- The total bandwidth (in kbps) of the service is greater than or equal to the bandwidth of the discontinued service(s).

Service Offer is limited. See Footnote on page 7-232

© 2024 Frontier Communications Parent, Inc. All rights reserved

7. Special Access Service (Cont'd)

7.4 Rate Regulations (Cont'd)

7.4.17 Digital Data and DS1 High Capacity Services (Cont'd)

(E) TPP Termination Without Liability (Cont'd) # (C)

(4) Termination liability will not apply when a customer meets the requirements for "portability". Portability is the replacement of a service under a TPP with another service for the balance of the TPP commitment period. Portability requirements are as follows:

- The replacement service must be of the same speed or type, and must not already be in a Term Pricing Plan.
- The orders to accomplish the replacement are placed with the Telephone Company at the same time with due dates within 90 days of each other, and are related by a Related Purchase Order Number.
- The quantities associated with the replacement are equal to or greater than the disconnected service.

(5) A customer may cancel a term plan on its DS1 High Capacity Services without penalty in order to include such DS1 High Capacity Services in a Commitment Discount Plan (as set forth in Section 25.1 following).

(F) Additions to TPPs

Customers with existing Term Pricing Plans who wish to increase the number of their DDS or DS1 services have the following options:

- Subscribe to the additional services under the basic payment plan.
- Subscribe to the additional services under a separate Term Pricing Plan.

Service Offer is limited. See Footnote on page 7-232 (N)

© 2024 Frontier Communications Parent, Inc. All rights reserved

7. Special Access Service (Cont'd)

7.4 Rate Regulations (Cont'd)

7.4.17 Digital Data and DS1 High Capacity Services (Cont'd)# (C)

Service Offer is limited. See Footnote on page 7-232 (N)

© 2024 Frontier Communications Parent, Inc. All rights reserved

7. Special Access Service (Cont'd)

7.4 Rate Regulations (Cont'd)

7.4.17 Digital Data and DS1 High Capacity Services (Cont'd) (C)

Service Offer is limited. See Footnote on page 7-232 (N)

© 2024 Frontier Communications Parent, Inc. All rights reserved

7. Special Access Service (Cont'd)

7.4 Rate Regulations (Cont'd)

7.4.17 Digital Data and DS1 High Capacity Services (Cont'd)# (C)

Service Offer is limited. See Footnote on page 7-232 (N)

© 2024 Frontier Communications Parent, Inc. All rights reserved

7. Special Access Service (Cont'd)

7.4 Rate Regulations (Cont'd)

7.4.17 Digital Data and DS1 High Capacity Services (Cont'd)# (C)

Service Offer is limited. See Footnote on page 7-232

(N)

© 2024 Frontier Communications Parent, Inc. All rights reserved

7. Special Access Service (Cont'd)

7.4 Rate Regulations (Cont'd)

7.4.18 Voice Grade Service Term Pricing Plans

(A) Description

Term Pricing Plans, TPPs, are pricing options available to customers who subscribe to specific longer term commitment periods in exchange for reduced monthly rates.

(1) TPPs for Voice Grade Services are available in 3 and 5-year commitment periods.

(2) The channel termination and the channel mileage (fixed and per-mile) rate elements are applicable for Voice Grade Service TPPs.

(3) A customer may purchase channel terminations under one term plan and channel mileage under another plan.

(4) Customers have the option of designating the channel terminations, channel mileage (fixed and per-mile), or both on a circuit-by-circuit basis.

(5) Voice Grade Term Pricing Plans do not include optional features. Optional features for Voice Grade Services in TPPs are available at basic service rates.

(6) Term Pricing Plans are not applicable to services in other rate plans, nor are Federal Telecommunications Access Services eligible for TPPs.

(7) Rates for Term Pricing Plans are detailed in Section 7.5.3. The nonrecurring rates for TPPs are the same as for Basic Service.

© 2022 Frontier Communications Parent, Inc. All rights reserved

7. Special Access Service (Cont'd)

7.4 Rate Regulations (Cont'd)

7.4.18 Voice Grade Service Term Pricing Plans (Cont'd)

(B) Terms and Conditions

(1) When requesting a Term Pricing Plan, the customer must specify the length of the desired commitment period and the services which are to be included in the plan.

(2) When requesting any Term Pricing Plan activity regarding channel terminations, the customer must specify by billing account and circuit identification number which circuits are to be affected.

(3) When ordering Term Pricing Plan services, related rate elements must be ordered under the same plan. For example, both rate elements for channel mileage, fixed and per-mile, must be in the same plan and have the same service date.

(4) Customers with existing TPPs who wish to increase the number of their Voice Grade services must either subscribe the additional services to new and separate TPPs or to the basic service plan.

(5) At the end of a TPP commitment period, the service(s) will be billed at the basic rate unless the customer subscribes to a new TPP.

(C) TPP Termination Liability

(1) A termination liability payment is applicable when a service is disconnected in full or in part prior to the end of the selected commitment period or when the customer fails to comply with the conditions required for a TPP, except as set forth in following.

(2) For TPP services designated on a circuit-by-circuit basis, the termination liability payment applies to each channel termination and fixed and per-mile recurring rate element which is disconnected prior to the expiration of the commitment period of the Term Pricing Plan.

(3) The termination liability charge is calculated as set forth in (a) or (b) following. The Telephone Company will apply the option which provides the customer with the lowest termination liability charge.

© 2022 Frontier Communications Parent, Inc. All rights reserved

7. Special Access Service (Cont'd)

7.4 Rate Regulations (Cont'd)

7.4.18 Voice Grade Service Term Pricing Plans (Cont'd)

(C) TPP Termination Liability (Cont'd)

(3) (Cont'd)

(a) Option I

For services discontinued within the first year, the customer will be liable for 100% of the total monthly charges for the unexpired portion of the initial 12 months, and 15% of the total monthly charges for the remainder of the TPP commitment period.

For services discontinued after the first 12 months of a plan, customers will be liable for 15% of the total monthly charges for the remaining portion of their Term Pricing Plan commitment period.

(b) Option II

For services discontinued within the first year, the termination liability charge will be the difference between the full Basic monthly rates and the TPP monthly rates for the period the plan has been in effect.

For services discontinued after the first 12 months of a plan but prior to the end of the selected commitment period, the following applies:

- Where there is no TPP period less than the actual time the services have been in effect the termination liability charge will be the difference between the full Basic monthly rates and the selected TPP monthly rates for the period the plan has been in effect.

- Where there is a TPP period less than the actual time the services have been in effect, the termination liability charge will be the difference between the monthly rates for the highest TPP period that could have been satisfied prior to discontinuation of the service and the monthly rates for the selected commitment period multiplied by the actual number of months the plan has been in effect.

For example, if a customer subscribes to a 5-year TPP and disconnects service during the thirty-seventh month, the highest TPP period that could have been satisfied is three years. The termination liability would be calculated as follows: 3-year monthly TPP rate - 5-year monthly TPP rate X 37 months.

© 2022 Frontier Communications Parent, Inc. All rights reserved

7. Special Access Service (Cont'd)

7.4 Rate Regulations (Cont'd)

7.4.18 Voice Grade Service Term Pricing Plans (Cont'd)

TPP Termination Without Liability

(1) Reserved For Future Use. (C)

(2) Termination liability is not applicable if the service is converted to a term plan of equal or greater value in revenue than the remainder of the present plan and meets the following condition:

The orders for the disconnect of the existing TPP and the installation of the new TPP are received by the Telephone Company at the same time, with due dates within 90 days of each other, and are related together by a Related Purchase Order Number, RPON.

(3) Termination liability will not apply when a customer meets the requirements for "portability". Portability is the replacement of a service under a TPP with another service for the balance of the TPP commitment period. Portability requirements are as follows:

- The replacement Voice Grade service cannot already be in a Term Pricing Plan.
- The orders to accomplish the replacement are placed with the Telephone Company at the same time with due dates within 90 days of each other, and are related by a RPON.
- The quantities associated with the replacement are equal to or greater than the disconnected service.

© 2024 Frontier Communications Parent, Inc. All rights reserved

7. Special Access Service (Cont'd)

7.4 Rate Regulations (Cont'd)

7.4.19 Commitment Discount Plans – Not Available

(D)

(D)

© 2022 Frontier Communications Parent, Inc. All rights reserved

7. Special Access Service (Cont'd)

7.5 Rates and Charges (Cont'd)

7.5.1 Metallic Service

(A) Channel Termination

	Monthly Rates
- Per point of termination	
Price Band 4	28.13
Price Band 5	28.13
Price Band 6	28.13

	Nonrecurring Charges	
	First	Additional
- Per point of termination		
Installation/Change		
Price Band 4	250.00	187.50
Price Band 5	250.00	187.50
Price Band 6	250.00	187.50
Rearrangement		
Price Band 4	200.00	125.00
Price Band 5	200.00	125.00
Price Band 6	200.00	125.00

(B) Channel Mileage

	Monthly Rates	
	Fixed	Per Mile
Price Band 4	None	4.06
Price Band 5	None	4.06
Price Band 6	None	4.06

(C) Optional Features and Functions

	Monthly Rates	Nonrecurring Charges
(1) Bridging		
(a) Three Premises Bridging, per Port		
Price Band 4	12.50	None
Price Band 5	12.50	None
Price Band 6	12.50	None
(b) Series Bridging, Per Port		
Price Band 4	12.50	None
Price Band 5	12.50	None
Price Band 6	12.50	None

© 2022 Frontier Communications Parent, Inc. All rights reserved

7. Special Access Service (Cont'd)

7.5 Rates and Charges (Cont'd)

7.5.2 Telegraph Grade Service

(A) Channel Termination
-Per point of termination

	Monthly Rates
Price Band 4	40.00
Price Band 5	40.00
Price Band 6	40.00
Four-Wire, Price Cap	49.57
Price Band 4	62.50
Price Band 5	62.50
Price Band 6	62.50

-Per point of termination	Nonrecurring Charges First	Nonrecurring Charges Additional
Two-Wire		
Installation/Change		
Price Band 4	250.00	187.50
Price Band 5	250.00	187.50
Price Band 6	250.00	187.50
Rearrangement		
Price Band 4	625.00	375.00
Price Band 5	625.00	375.00
Price Band 6	625.00	375.00
Four-Wire		
Installation/Change*		
Price Band 4	250.00	187.50
Price Band 5	250.00	187.50
Price Band 6	250.00	187.50
Rearrangement		
Price Band 4	625.00	375.00
Price Band 5	625.00	375.00
Price Band 6	625.00	375.00

© 2022 Frontier Communications Parent, Inc. All rights reserved

7. Special Access Service (Cont'd)

7.5 Rates and Charges (Cont'd)

7.5.2 Telegraph Grade Service (Cont'd)

	Monthly Rates	
	Fixed	Per Mile
(B) Channel Mileage		
Price Band 4	17.81	0.48
Price Band 5	17.81	0.48
Price Band 6	17.81	0.48

(C) Optional Features and Functions	Monthly Rates	Nonrecurring Charges
(1) Telegraph Bridging -Per port		
Two-Wire		
Price Band 4	12.50	None
Price Band 5	12.50	None
Price Band 6	12.50	None
Four-Wire		
Price Band 4	12.50	None
Price Band 5	12.50	None
Price Band 6	2.50	None

© 2022 Frontier Communications Parent, Inc. All rights reserved

7. Special Access Service (Cont'd)

7.5 Rates and Charges (Cont'd)

7.5.3 Voice Grade Service

	Monthly Rates	
(A) Channel Termination - per point of termination		
(1) Payment Plan		
- Two-Wire		
Basic (month-to-month)		
All Price Bands	$495.38	(C)
3-Year TPP #		
All Price Bands	425.76	
5-Year TPP #		
All Price Bands	391.11	
- Four-Wire		
Basic		
All Price Bands	990.44	
3-Year TPP #		
All Price Bands	870.75	
5-Year TPP #		
All Price Bands	825.05	(C)

Effective November 19, 2021 VG Term Pricing Plans (TPP) are no longer permitted. VG TPP in effect as of November 19, 2021 may continue the existing term but will not be eligible to extend, renew, reenroll in, convert to a new term period, or in any other way continue their existing plan beyond its current expiration. At expiration of a TPP, the service will convert to the Month to Month Rate. If at any time an existing customer terminates its VG TPP, the customer may not re-subscribe to the plan.

© 2024 Frontier Communications Parent, Inc. All rights reserved

7. Special Access Service (Cont'd)

7.5 Rates and Charges (Cont'd)

7.5.3 Voice Grade Service (Cont'd)

(A) Channel Termination (Cont'd)
- per point of termination

(2) Nonrecurring Charges

	First	Additional	
- Two-Wire Installation/Change			
All Price Bands	$ 393.77	$ 236.29	(C)
Rearrangement All Price Bands	393.77	236.29	
- Four-Wire Installation/Change			
All Price Bands	393.77	236.29	
Rearrangement All Price Bands	393.77	236.29	

	Monthly Rates		
(B) Channel Mileage	Fixed	Per Mile	
Basic All Price Bands	$ 280.54	$ 7.56	
3-Year TPP # All Price Bands	271.39	7.09	
5-Year TPP # All Price Bands	261.95	6.47	(C)

Service offer is limited. See footnote on page 7-250

© 2024 Frontier Communications Parent, Inc. All rights reserved

7. Special Access Service (Cont'd)

7.5 Rates and Charges (Cont'd)

7.5.3 Voice Grade Service (Cont'd)

(C) Optional Features and Functions

	Monthly Rates	Nonrecurring Charges
(1) Bridging		
(a) Voice Bridging - per port		
Two-Wire		
Price Band 4	37.50	None
Price Band 5	37.50	None
Price Band 6	37.50	None
Four-Wire		
Price Band 4	25.00	None
Price Band 5	25.00	None
Price Band 6	25.00	None
(b) Data Bridging - per port		
Two-Wire		
Price Band 4	17.28	None
Price Band 5	17.28	None
Price Band 6	17.28	None
Four-Wire		
Price Band 4	17.28	None
Price Band 5	17.28	None
Price Band 6	17.28	None

© 2022 Frontier Communications Parent, Inc. All rights reserved

7. Special Access Service (Cont'd)

7.5 Rates and Charges (Cont'd)

7.5.3 Voice Grade Service (Cont'd)

(C) Optional Features and Functions (Cont'd)

(1) Bridging (Cont'd)

	Monthly Rates	Nonrecurring Charges
(c) Telephoto Bridging - Per Port		
- Two-Wire		
Price Band 4	17.28	None
Price Band 5	17.28	None
Price Band 6	17.28	None
- Four-Wire		
Price Band 4	17.28	None
Price Band 5	17.28	None
Price Band 6	17.28	None
DATAPHONE Select-A-Station Bridging		
Sequential Arrangement		
- Ports - Per 2-wire channel connected		
Price Band 4	18.75	None
Price Band 5	18.75	None
Price Band 6	18.75	None
- Per 4-wire channel connected		
Price Band 4	50.00	None
Price Band 5	50.00	None
Price Band 6	50.00	None

© 2022 Frontier Communications Parent, Inc. All rights reserved

7. Special Access Service (Cont'd)

7.5 Rates and Charges (Cont'd)

7.5.3 Voice Grade Service (Cont'd)

(C) Optional Features and Functions (Cont'd)

(1) Bridging (Cont'd)

DATAPHONE Select-A-Station Bridging (Cont'd)

	Monthly Rates	Nonrecurring Charges
Addressable Arrangement		
- Ports		
- Per 2-wire channel connected		
Price Band 4	18.75	None
Price Band 5	18.75	None
Price Band 6	18.75	None
- Per 4-wire channel connected		
Price Band 4	50.00	None
Price Band 5	50.00	None
Price Band 6	50.00	None

© 2022 Frontier Communications Parent, Inc. All rights reserved

7. Special Access Service (Cont'd)

7.5 Rates and Charges (Cont'd)

7.5.3 Voice Grade Service (Cont'd)

(C) Optional Features and Functions (Cont'd)

(1) Bridging (Cont'd)

(e) Telemetry and Alarm Bridging

	Monthly Rates	Nonrecurring Charges
Active Bridging Channel Connections		
Split Band		
- Per channel connected		
Price Band 4	25.00	None
Price Band 5	25.00	None
Price Band 6	25.00	None
Summation		
- Per channel connected		
Price Band 4	17.28	None
Price Band 5	17.28	None
Price Band 6	17.28	None
Passive Bridging Channel Connections		
- Per channel connected		
Price Band 4	25.00	None
Price Band 5	25.00	None
Price Band 6	25.00	None

© 2022 Frontier Communications Parent, Inc. All rights reserved

7. Special Access Service (Cont'd)

7.5 Rates and Charges (Cont'd)

7.5.3 Voice Grade Service (Cont'd)

	Monthly Rates	Nonrecurring Charges	
(2) Conditioning, - Per point of termination			
C – Type			
Price Cap	$ 2.00	None	(C)
Price Band 4	2.50	None	
Price Band 5	2.50	None	
Price Band 6	2.50	None	
Improved Attenuation Distortion			
Price Cap	$ 2.00	None	(C)
Price Band 4	2.50	None	
Price Band 5	2.50	None	
Price Band 6	2.50	None	
Improved Envelope Delay Distortion			
Price Cap	$75.16	None	(C)
Price Band 4	93.75	None	
Price Band 5	93.75	None	
Price Band 6	93.75	None	
Sealing Current			
Price Cap	None	None	(C)
Price Band 4	None	None	
Price Band 5	None	None	
Price Band 6	None	None	

© 2022 Frontier Communications Parent, Inc. All rights reserved

7. Special Access Service (Cont'd)

7.5 Rates and Charges (Cont'd)

7.5.3 Voice Grade Service (Cont'd)

(C) Optional Features and Functions (Cont'd)

	Monthly Rates	Nonrecurring Charges	
(3) Improved Return Loss for Effective Two-Wire Transmission or Improved Termination for Four-Wire Transmission			
Improved Return Loss - Per point of termination - Two-Wire			
Price Cap	$ 7.01	None	(C)
Price Band 4	8.75	None	
Price Band 5	8.75	None	
Price Band 6	8.75	None	
Improved Termination - Per point of termination - Four-Wire			
Price Cap	$ 9.02	None	(C)
Price Band 4	11.25	None	
Price Band 5	11.25	None	
Price Band 6	11.25	None	
(4) Multiplexing Voice to Telegraph Grade - Per arrangement			
Price Band 4	406.25	None	
Price Band 5	406.25	None	
Price Band 6	406.25	None	
(5) Data Capability, per point of termination			
Price Cap	$ 0.00	$250.52	(C)
Price Band 4	0.00	250.00	
Price Band 5	0.00	250.00	
Price Band 6	0.00	250.00	
(6) Telephoto Capability, per point of termination			
Price Cap	$ 3.51	$250.52	(C)
Price Band 4	4.38	250.00	
Price Band 5	4.38	250.00	
Price Band 6	4.38	250.00	

© 2022 Frontier Communications Parent, Inc. All rights reserved

7. Special Access Service (Cont'd)

7.5 Rates and Charges (Cont'd)

7.5.3 Voice Grade Service (Cont'd)

(C) Optional Features and Functions (Cont'd)

	Monthly Rates	Nonrecurring Charges	
(7) Signaling Capability, per point of termination			
Price Cap	$ 4.65	None	(C)
Price Band 4	12.46	None	
Price Band 5	12.46	None	
Price Band 6	12.46	None	

- In lieu of ++, substitute appropriate two digit code from following list to specify type of signaling.

AB
AC
CT
DX
DY
EA
EB
EC
EX
GO
GS
LA
LB
LC
LO
LR
LS
RV
SF

© 2022 Frontier Communications Parent, Inc. All rights reserved

7. Special Access Service (Cont'd)

7.5 Rates and Charges (Cont'd)

7.5.3 Voice Grade Service (Cont'd)

(C) Optional Features and Functions (Cont'd)

	Monthly Rates	Nonrecurring Charges	
(8) Selective Signaling Arrangement, per arrangement			
Price Cap	$55.11	None	(C)
Price Band 4	68.75	None	
Price Band 5	68.75	None	
Price Band 6	68.75	None	
(9) Transfer Arrangement (key activated* or dial-up**)			
- Per four port arrangement including control channel termination***			
Price Band 4	31.25	None	
Price Band 5	31.25	None	
Price Band 6	31.25	None	
- Per five port arrangement including control channel termination***			
Price Band 4	31.25	None	
Price Band 5	31.25	None	
Price Band 6	31.25	None	

* The key activated control channel is rated as a Metallic Channel Termination (use USOC T6EME in lieu of T6ECS) and Channel Mileage, if applicable (use USOC 1L5MS in lieu of 1L5LS).

** The Dial-up option requires the customer to purchase the Controller Arrangement (USOC XTDDU) from 13.3.7 following.

*** An additional Channel Termination charge will apply whenever a spare channel is configured as a leg to the customer's premises. Additional channel mileage charges will also apply when the transfer arrangement is not located in the customer premises serving the wire center.

© 2022 Frontier Communications Parent, Inc. All rights reserved

7. Special Access Service (Cont'd)

7.5 Rates and Charges (Cont'd)

7.5.3.1 WATS Access Line Service

	Monthly Rates	
(A) WATS Access Connection (WAC) -Per point of termination		
Two-Wire		
All Price Bands	$ 495.38	(C)
Four-Wire		
All Price Bands	$ 990.44	

Nonrecurring Charges			
-Per point of termination		First	Additional
-Two-Wire Installation/Charge			
	All Price Bands	$ 393.77	$ 236.29
Rearrangement			
	All Price Bands	393.77	236.29
-Four-Wire Installation/Change			
	All Price Bands	393.77	236.29
Rearrangement			
	All Price Bands	393.77	236.29 (C)

© 2024 Frontier Communications Parent, Inc. All rights reserved

7. Special Access Service (Cont'd)

7.5 Rates and Charges (Cont'd)

7.5.3.1 WATS Access Line Service

	Fixed	Monthly Rates Per Mile
(B) Channel Mileage		
Price Band 4	0.00	0.00
Price Band 5	0.00	0.00
Price Band 6	0.00	0.00

(C) Optional Features and Functions	Monthly Rates	Nonrecurring Charges
(1) Bridging		
(a) WAC Bridging, Per port		
- Two-Wire		
Price Band 4	37.50	None
Price Band 5	37.50	None
Price Band 6	37.50	None
- Four-Wire		
Price Band 4	25.00	None
Price Band 5	25.00	None
Price Band 6	25.00	None
(2) Improved Two-Wire Transmission Specifications		
- Per point of termination		
Price Cap	11.25	None (C)
Price Band 4	11.25	None
Price Band 5	11.25	None
Price Band 6	11.25	None

© 2022 Frontier Communications Parent, Inc. All rights reserved

7. Special Access Service (Cont'd)

7.5 Rates and Charges (Cont'd)

7.5.4 Program Audio Service

(A) Channel Termination
- Per point of termination

	Monthly Rates	Daily Rates	Nonrecurring Charges First	Nonrecurring Charges Additional	
200 to 3500 Hz					
Price Band 4	31.21	3.29	821.25	821.25	(I)
Price Band 5	31.21	3.29	821.25	821.25	(I)
Price Band 6	31.21	3.29	821.25	821.25	(I)
100 to 5000 Hz					
Price Band 4	41.61	4.38	1197.66	1197.66	(I)
Price Band 5	41.61	4.38	1197.66	1197.66	(I)
Price Band 6	41.61	4.38	1197.66	1197.66	(I)
50 to 8000 Hz					
Price Band 4	50.37	5.48	1198.13	1198.13	(I)
Price Band 5	50.37	5.48	1198.13	1198.13	(I)
Price Band 6	50.37	5.48	1198.13	1198.13	(I)
50 to 15000 Hz					
Price Band 4	104.03	10.95	1266.10	1266.10	(I)
Price Band 5	104.03	10.95	1266.10	1266.10	(I)
Price Band 6	104.03	10.95	1266.10	1266.10	(I)

(B) Channel Mileage

	Monthly Rates Fixed	Monthly Rates Per Mile	Daily Rates Fixed	Daily Rates Per Mile
(1) 200 to 3500 Hz				
Price Band 4	16.43	.49	1.64	.05
Price Band 5	16.43	.49	1.64	.05
Price Band 6	16.43	.49	1.64	.05
(2) 100 to 5000 Hz				
Price Band 4	32.85	.66	3.29	.07
Price Band 5	32.85	.66	3.29	.07
Price Band 6	32.85	.66	3.29	.07
(3) 50 to 8000 Hz				
Price Band 4	43.80	1.31	4.38	.13
Price Band 5	43.80	1.31	4.38	.13
Price Band 6	43.80	1.31	4.38	.13
(4) 50 to 15000 Hz				
Price Band 4	87.60	2.63	8.76	.26
Price Band 5	87.60	2.63	8.76	.26
Price Band 6	87.60	2.63	8.76	.26

© 2022 Frontier Communications Parent, Inc. All rights reserved

7. Special Access Service (Cont'd)

7.5 Rates and Charges (Cont'd)

7.5.4 Program Audio Service (Cont'd)

(C) Optional Features and Functions

	Monthly Rates	Daily Rates	Nonrecurring Charges Monthly	Nonrecurring Charges Daily
(1) Bridging (Distribution Amplifier) -Per port				
Price Band 4	21.90	2.19	None	None
Price Band 5	21.90	2.19	None	None
Price Band 6	21.90	2.19	None	None
(2) Gain Conditioning -Per service				
Price Band 4	20.19	2.19	328.50	$246.38
Price Band 5	20.19	2.19	328.50	$246.38
Price Band 6	20.19	2.19	328.50	$246.38
(3) Stereo -Per service				
Price Band 4	None	None	1,861.50	1,204.50
Price Band 5	None	None	1,861.50	1,204.50
Price Band 6	None	None	1,861.50	1,204.50

© 2022 Frontier Communications Parent, Inc. All rights reserved

7. Special Access Service (Cont'd)

7.5 Rates and Charges (Cont'd)

7.5.5 Video Service

(A) Channel Termination, Per Point of Termination

(1a) Basic Service - Premises to Premises Arrangement

Service Type	Monthly Rate	Daily Rate	Nonrecurring Charges Monthly First	Monthly Add'l	Daily First	Daily Add'l
- TV1 or 2						
Price Band 4	325.00	125.00	600.00	375.00	600.00	375.00
Price Band 5	325.00	125.00	600.00	375.00	600.00	375.00
Price Band 6	325.00	125.00	600.00	375.00	600.00	375.00
- 4TV-5						
Price Band 4	325.00	125.00	600.00	375.00	600.00	375.00
Price Band 5	325.00	125.00	600.00	375.00	600.00	375.00
Price Band 6	325.00	125.00	600.00	375.00	600.00	375.00
- 6TV-5						
Price Band 4	325.00	125.00	600.00	375.00	600.00	375.00
Price Band 5	325.00	125.00	600.00	375.00	600.00	375.00
Price Band 6	325.00	125.00	600.00	375.00	600.00	375.00
- TV-15						
Price Band 4	325.00	125.00	600.00	375.00	600.00	375.00
Price Band 5	325.00	125.00	600.00	375.00	600.00	375.00
Price Band 6	325.00	125.00	600.00	375.00	600.00	375.00

© 2022 Frontier Communications Parent, Inc. All rights reserved

7. Special Access Service (Cont'd)

7.5 Rates and Charges (Cont'd)

7.5.5 Video Service (Cont'd)

(A) Channel Termination, Per Point of Termination (Cont'd)

(1b) Basic Service - Premises to Hub Arrangement

Service Type	Monthly Rate	Daily Rate	Nonrecurring Charges Monthly First	Monthly Add'l	Daily First	Daily Add'l
- TV1 or 2						
Price Band 4	500.00	125.00	1000.00	625.00	1000.00	625.00
Price Band 5	500.00	125.00	1000.00	625.00	1000.00	625.00
Price Band 6	500.00	125.00	1000.00	625.00	1000.00	625.00
- 4TV-5						
Price Band 4	500.00	125.00	1000.00	625.00	1000.00	625.00
Price Band 5	500.00	125.00	1000.00	625.00	1000.00	625.00
Price Band 6	500.00	125.00	1000.00	625.00	1000.00	625.00
- 6TV-5						
Price Band 4	500.00	125.00	1000.00	625.00	1000.00	625.00
Price Band 5	500.00	125.00	1000.00	625.00	1000.00	625.00
Price Band 6	500.00	125.00	1000.00	625.00	1000.00	625.00
- TV-15						
Price Band 4	500.00	125.00	1000.00	625.00	1000.00	625.00
Price Band 5	500.00	125.00	1000.00	625.00	1000.00	625.00
Price Band 6	500.00	125.00	1000.00	625.00	1000.00	625.00

© 2022 Frontier Communications Parent, Inc. All rights reserved

7. Special Access Service (Cont'd)

7.5 Rates and Charges (Cont'd)

7.5.5 Video Service

(A) Channel Termination, Per Point of Termination (Cont'd)

(2) Multichannel Service

Type	Monthly Rate	Nonrecurring Charge
(a) Premises to Premises Arrangement		
(a1) Standard TV15		
5-year		
Price Band 4	275.00	None
Price Band 5	275.00	None
Price Band 6	275.00	None
10-year		
Price Band 4	265.00	None
Price Band 5	265.00	None
Price Band 6	256.00	None
(a2) TV-15 with CPE		
5-year		
Price Band 4	200.00	None
Price Band 5	200.00	None
Price Band 6	200.00	None
(b) Premises to Hub Arrangement		
(b1) Standard TV15		
5-year		
Price Band 4	375.00	None
Price Band 5	375.00	None
Price Band 6	375.00	None
10-year		
Price Band 4	360.00	None
Price Band 5	360.00	None
Price Band 6	360.00	None
(b2) TV-15 with CPE		
5-year		
Price Band 4	325.00	None
Price Band 5	325.00	None
Price Band 6	325.00	None

© 2022 Frontier Communications Parent, Inc. All rights reserved

7. Special Access Service (Cont'd)

7.5 Rates and Charges (Cont'd)

7.5.5 Video Service (Cont'd)

	Monthly Rates		Daily Rates	
	Fixed	Per Mile	Fixed	Per Mile
(B) Channel Mileage				
(1) Basic Service				
Price Band 4	$85.00	$60.00	$30.00	$35.00
Price Band 5	$85.00	$60.00	$30.00	$35.00
Price Band 6	$85.00	$60.00	$30.00	$35.00
(2) 5-Yr Multichannel Service, - Per service arrangement				
Price Band 4	60.00	150.00		
Price Band 5	60.00	150.00		
Price Band 6	60.00	150.00		
(3) 10-Yr Multichannel Service, - Per service arrangement				
Price Band 4	55.00	115.00		
Price Band 5	55.00	115.00		
Price Band 6	55.00	115.00		

© 2022 Frontier Communications Parent, Inc. All rights reserved

7. Special Access Service (Cont'd)

7.5 Rates and Charges (Cont'd)

7.5.5 Video Service (Cont'd)

	Monthly Rates	Nonrecurring Charges
(C) Optional Features and Functions		
(1) Video Switching Arrangement* - 5 Year Term Plan		
(a) Basic 20X10 Video Switch*		
Price Band 4	575.00	200.00
Price Band 5	575.00	200.00
Price Band 6	575.00	200.00
(b) Video Switch Expansion Module*		
Price Band 4	55.00	200.00
Price Band 5	55.00	200.00
Price Band 6	55.00	200.00
(c) 10X1 Video Switch*		
Price Band 4	365.00	200.00
Price Band 5	365.00	200.00
Price Band 6	365.00	200.00
32X32 Video Switch*		
Price Band 4	2050.00	200.00
Price Band 5	2050.00	200.00
Price Band 6	2050.00	200.00
(e) 48X48 Video Switch*		
Price Band 4	2730.00	200.00
Price Band 5	2730.00	200.00
Price Band 6	2730.00	200.00
(f) GPI*		
Price Band 4	125.00	
Price Band 5	125.00	
Price Band 6	125.00	

*** Note: Effective April 20, 2002, the services rated in (C)(1) & (2) are no longer available to new customers. Instead, new customers should see (C)(6) for Advanced Video Switching rates.**

© 2022 Frontier Communications Parent, Inc. All rights reserved

7. Special Access Service (Cont'd)

7.5 Rates and Charges (Cont'd)

7.5.5 Video Service (Cont'd)

(C) Optional Features and Functions (Cont'd)

	Monthly Rates	Nonrecurring Charges
(2) Video Switching Arrangement* - 10 Year Rate Stability Plan		
(a) 48X48 Video Switch*		
Price Band 4	2,570.00	200.00
Price Band 5	2,570.00	200.00
Price Band 6	2,570.00	200.00
(b) GPI*		
Price Band 4	110.00	
Price Band 5	110.00	
Price Band 6	110.00	

*** Note: Effective April 20, 2002, the services rated in (C)(1) & (2) are no longer available to new customers. Instead, new customers should see (C)(6) for Advanced Video Switching rates.**

	Monthly Rates	Daily Rates	Nonrecurring Charges First	Nonrecurring Charges Additional
(3) Video Patch Arrangement -Per Switch, Per Arrangement				
Price Band 4	50.00	50.00	200.00	200.00
Price Band 5	50.00	50.00	200.00	200.00
Price Band 6	50.00	50.00	200.00	200.00
(4) 1X6 Video Distribution Amplifier				
Price Band 4	75.00	75.00	200.00	200.00
Price Band 5	75.00	75.00	200.00	200.00
Price Band 6	75.00	75.00	200.00	200.00

© 2022 Frontier Communications Parent, Inc. All rights reserved

7. Special Access Service (Cont'd)

7.5 Rates and Charges (Cont'd)

7.5.5 Video Service (Cont'd)

(C) Optional Features and Functions (Cont'd)

	Monthly Rates	Nonrecurring Charge
(5) Additional Audio Channels - per associated video channel		
(a) Basic Service		
Price Band 4	80.00	NONE
Price Band 5	80.00	NONE
Price Band 6	80.00	NONE
(b) Multichannel Service		
Price Band 4	50.00	NONE
Price Band 5	50.00	NONE
Price Band 6	50.00	NONE

© 2022 Frontier Communications Parent, Inc. All rights reserved

7. Special Access Service (Cont'd)

7.5 Rates and Charges (Cont'd)

7.5.5 Video Service (Cont'd)

(C) Optional Features and Functions (Cont'd)

	Monthly Rates	Nonrecurring Charge
(6) Advanced Video Switching		
(a) Provisioned as a Dedicated Switching Arrangement		
(i) 5-year Term Plans		
32 X 32 Switch		
Price Band 4	2050.00	200.00
Price Band 5	2050.00	200.00
Price Band 6	2050.00	200.00
64 X 64 Switch		
Price Band 4	3800.00	200.00
Price Band 5	3800.00	200.00
Price Band 6	3800.00	200.00
96 X 64 Switch		
Price Band 4	4700.00	200.00
Price Band 5	4700.00	200.00
Price Band 6	4700.00	200.00
96 X 96 Switch		
Price Band 4	6900.00	200.00
Price Band 5	6900.00	200.00
Price Band 6	6900.00	200.00
128 X 96 Switch		
Price Band 4	8200.00	200.00
Price Band 5	8200.00	200.00
Price Band 6	8200.00	200.00
128 X 128 Switch		
Price Band 4	10,000.00	200.00
Price Band 5	10,000.00	200.00
Price Band 6	10,000.00	200.00

© 2022 Frontier Communications Parent, Inc. All rights reserved

7. Special Access Service (Cont'd)

7.5 Rates and Charges (Cont'd)

7.5.5 Video Service (Cont'd)

(C) Optional Features and Functions (Cont'd)

(6) Advanced Video Switching (Cont'd)

(a) Provisioned as a Dedicated Switching Arrangement (Cont'd)

	Monthly Rates	Nonrecurring Charge
(ii) 10-year Term Plans		
32 X 32 Switch		
Price Band 4	1800.00	200.00
Price Band 5	1800.00	200.00
Price Band 6	1800.00	200.00
64 X 64 Switch		
Price Band 4	3500.00	200.00
Price Band 5	3500.00	200.00
Price Band 6	3500.00	200.00
96 X 64 Switch		
Price Band 4	4400.00	200.00
Price Band 5	4400.00	200.00
Price Band 6	4400.00	200.00
96 X 96 Switch		
Price Band 4	6400.00	200.00
Price Band 5	6400.00	200.00
Price Band 6	6400.00	200.00
128 X 96 Switch		
Price Band 4	7600.00	200.00
Price Band 5	7600.00	200.00
Price Band 6	7600.00	200.00
128 X 128 Switch		
Price Band 4	9100.00	200.00
Price Band 5	9100.00	200.00
Price Band 6	9100.00	200.00

© 2022 Frontier Communications Parent, Inc. All rights reserved

7. Special Access Service (Cont'd)

7.5 Rates and Charges (Cont'd)

7.5.5 Video Service (Cont'd)

(C) Optional Features and Functions (Cont'd)

(6) Advanced Video Switching (Cont'd)

(b) Provisioned as a Shared Switching Arrangement

AVS Switch Port,
Per Port

Term Plan	Monthly Rate	Nonrecurring Charge
Month-to-Month		
Price Band 4	95.00	NONE
Price Band 5	95.00	NONE
Price Band 6	95.00	NONE
1-Year		
Price Band 4	80.00	NONE
Price Band 5	80.00	NONE
Price Band 6	80.00	NONE
3-Year		
Price Band 4	70.00	NONE
Price Band 5	70.00	NONE
Price Band 6	70.00	NONE
5-Year		
Price Band 4	60.00	NONE
Price Band 5	60.00	NONE
Price Band 6	60.00	NONE

© 2022 Frontier Communications Parent, Inc. All rights reserved

7. Special Access Service (Cont'd)

7.5 Rates and Charges (Cont'd)

7.5.5 Video Service (Cont'd)

Serial Component Video Service

(1) **RESERVED FOR FUTURE USE**

© 2022 Frontier Communications Parent, Inc. All rights reserved

7. Special Access Service (Cont'd)

7.5 Rates and Charges (Cont'd)

7.5.5 Video Service (Cont'd)

Serial Component Video Service

(1) **Channel Terminations,** one-way only, - **Price Band 4**
-per point of termination

(a) Premises-to-Premises

Term Plan	**Monthly Rate**	**Nonrecurring Charge**
Month-to-Month	$450.00	NONE
3-Year	405.00	NONE
5-Year	360.00	NONE

Daily	**Monthly Rate**	**Nonrecurring Charge**
(Part-time)	$300.00	First: $600.00 Add'l: $375.00

(b) Premises-to-Hub

Term Plan	**Monthly Rate**	**Nonrecurring Charge**
Month-to-Month	$575.00	NONE
3-Year	550.00	NONE
5-Year	525.00	NONE

Daily	**Monthly Rate**	**Nonrecurring Charge**
(Part-time)	$400.00	$600.00

© 2022 Frontier Communications Parent, Inc. All rights reserved

7. Special Access Service (Cont'd)

7.5 Rates and Charges (Cont'd)

7.5.5 Video Service (Cont'd)

Serial Component Video Service (Cont'd)
(1) **Channel Terminations,** one-way only - **Price Band 5**
-per point of termination

(a) Premises-to-Premises

Term Plan	**Monthly Rate**	**Nonrecurring Charge**
Month-to-Month	$450.00	NONE
3-Year	405.00	NONE
5-Year	360.00	NONE

Daily	**Monthly Rate**	**Nonrecurring Charge**
(Part-time)	$300.00	First: $600.00 Add'l: $375.00

(b) Premises-to-Hub

Term Plan	**Monthly Rate**	**Nonrecurring Charge**
Month-to-Month	$575.00	NONE
3-Year	550.00	NONE
5-Year	525.00	NONE

Daily	**Monthly Rate**	**Nonrecurring Charge**
(Part-time)	$400.00	$600.00

© 2022 Frontier Communications Parent, Inc. All rights reserved

7. Special Access Service (Cont'd)

7.5 Rates and Charges (Cont'd)

7.5.5 Video Service (Cont'd)

Serial Component Video Service (Cont'd)

(1) **Channel Terminations,** one-way only **- Price Band 6**
-per point of termination

(a) Premises-to-Premises

Term Plan	**Monthly Rate**	**Nonrecurring Charge**
Month-to-Month	$450.00	NONE
3-Year	405.00	NONE
5-Year	360.00	NONE

Daily	**Monthly Rate**	**Nonrecurring Charge**
(Part-time)	$300.00	First: $600.00 Add'l: $375.00

(b) Premises-to-Hub

Term Plan	**Monthly Rate**	**Nonrecurring Charge**
Month-to-Month	$575.00	NONE
3-Year	550.00	NONE
5-Year	525.00	NONE

Daily	**Monthly Rate**	**Nonrecurring Charge**
(Part-time)	$400.00	$600.00

© 2022 Frontier Communications Parent, Inc. All rights reserved

7. Special Access Service (Cont'd)

7.5 Rates and Charges (Cont'd)

7.5.5 Video Service (Cont'd)

Serial Component Video Service Cont'd)

(2) **Channel Mileage**

- N-MSA

Term Plan	**Monthly Rate**
Month-to-Month	
Fixed	$10.00
Per Mile	100.00
3-Year	
Fixed	9.00
Per Mile	90.00
5-Year	
Fixed	8.00
Per Mile	80.00
Daily	
- Fixed	10.00
- Per Mile	50.00

© 2022 Frontier Communications Parent, Inc. All rights reserved

7. Special Access Service (Cont'd)

7.5 Rates and Charges (Cont'd)

7.5.5 Video Service (Cont'd)

Serial Component Video Service (Cont'd)

(2) **Channel Mileage, Price Band 4**

Term Plan	**Monthly Rate**
Month-to-Month	
Fixed	$10.00
Per Mile	100.00
3-Year	
Fixed	9.00
Per Mile	90.00
5-Year	
Fixed	8.00
Per Mile	80.00
Daily	
- Fixed	10.00
- Per Mile	50.00

© 2022 Frontier Communications Parent, Inc. All rights reserved

7. Special Access Service (Cont'd)

7.5 Rates and Charges (Cont'd)

7.5.5 Video Service (Cont'd)

Serial Component Video Service (Cont'd)

(2) **Channel Mileage, Price Band 5**

Term Plan	**Monthly Rate**
Month-to-Month	
Fixed	$10.00
Per Mile	100.00
3-Year	
Fixed	9.00
Per Mile	90.00
5-Year	
Fixed	8.00
Per Mile	80.00
Daily	
- Fixed	10.00
- Per Mile	50.00

© 2022 Frontier Communications Parent, Inc. All rights reserved

7. Special Access Service (Cont'd)

7.5 Rates and Charges (Cont'd)

7.5.5 Video Service (Cont'd)

Serial Component Video Service (Cont'd)

(2) **Channel Mileage, Price Band 6**

Term Plan	**Monthly Rate**
Month-to-Month	
Fixed	$10.00
Per Mile	100.00
3-Year	
Fixed	9.00
Per Mile	90.00
5-Year	
Fixed	8.00
Per Mile	80.00
Daily	
- Fixed	10.00
- Per Mile	50.00

© 2022 Frontier Communications Parent, Inc. All rights reserved

7. Special Access Service (Cont'd)

7.5 Rates and Charges (Cont'd)

7.5.5 Video Service (Cont'd)

(E) RESERVED FOR FUTURE USE

© 2022 Frontier Communications Parent, Inc. All rights reserved

7. Special Access Service (Cont'd)

7.5 Rates and Charges (Cont'd)

7.5.5 Video Service (Cont'd)

(E) High-Definition (Hi-Def) Digital Video Transport Service, Price Band 4

(1) **Channel Terminations,** one-way only -per point of termination

(a) -premises-to-premises

Term Plan	Monthly Rate	Nonrecurring Charge
Month-to-Month	$589.50	$750.00
1-Year	450.00	NONE
3-Year	400.00	NONE
5-Year	350.00	NONE

(b) -premises-to-hub

Term Plan	Monthly Rate	Nonrecurring Charge
Month-to-Month	$589.50	$750.00
1-Year	485.00	NONE
3-Year	436.50	NONE
5-Year	388.00	NONE

(2) **Channel Mileage**

Term Plan	USOC	Monthly Rate
Month-to-Month		
Fixed		$25.00
Per Mile		130.00
1-Year		
Fixed		20.00
Per Mile		120.00
3-Year		
Fixed		18.00
Per Mile		110.00
5-Year		
Fixed		16.00
Per Mile		100.00

© 2022 Frontier Communications Parent, Inc. All rights reserved

7. Special Access Service (Cont'd)

7.5 Rates and Charges (Cont'd)

7.5.5 Video Service (Cont'd)

(E) High-Definition (Hi-Def) Digital Video Transport Service, Price Band 5

(1) **Channel Terminations,** one-way only -per point of termination

(a) -premises-to-premises

Term Plan	Monthly Rate	Nonrecurring Charge
Month-to-Month	$589.50	$750.00
1-Year	450.00	NONE
3-Year	400.00	NONE
5-Year	350.00	NONE

(b) -premises-to-hub

Term Plan	Monthly Rate	Nonrecurring Charge
Month-to-Month	$589.50	$750.00
1-Year	485.00	NONE
3-Year	436.50	NONE
5-Year	388.00	NONE

(2) **Channel Mileage**

Term Plan	Monthly Rate
Month-to-Month	
Fixed	$25.00
Per Mile	130.00
1-Year	
Fixed	20.00
Per Mile	120.00
3-Year	
Fixed	18.00
Per Mile	110.00
5-Year	
Fixed	16.00
Per Mile	100.00

© 2022 Frontier Communications Parent, Inc. All rights reserved

7. Special Access Service (Cont'd)

7.5 Rates and Charges (Cont'd)

7.5.5 Video Service (Cont'd)

(E) High-Definition (Hi-Def) Digital Video Transport Service, Price Band 6

(1) **Channel Terminations,** one-way only -per point of termination

(a) -premises-to-premises

Term Plan	Monthly Rate	Nonrecurring Charge
Month-to-Month	$589.50	$750.00
1-Year	450.00	NONE
3-Year	400.00	NONE
5-Year	350.00	NONE

(b) -premises-to-hub

Term Plan	Monthly Rate	Nonrecurring Charge
Month-to-Month	$589.50	$750.00
1-Year	485.00	NONE
3-Year	436.50	NONE
5-Year	388.00	NONE

(2) **Channel Mileage**

Term Plan	Monthly Rate
Month-to-Month	
Fixed	$25.00
Per Mile	130.00
1-Year	
Fixed	20.00
Per Mile	120.00
3-Year	
Fixed	18.00
Per Mile	110.00
5-Year	
Fixed	16.00
Per Mile	100.00

© 2022 Frontier Communications Parent, Inc. All rights reserved

7. Special Access Service (Cont'd)

7.5 Rates and Charges (Cont'd)

7.5.5 Video Service (Cont'd)

(F) 45 Mbps Digital Video Transport Service

(1) **RESERVED FOR FUTURE USE**

© 2022 Frontier Communications Parent, Inc. All rights reserved

7. Special Access Service (Cont'd)

7.5 Rates and Charges (Cont'd)

7.5.5 Video Service (Cont'd)

(F) 45 Mbps Digital Video Transport Service, (Cont'd)

(1) **Channel Terminations,** one-way only, **- Price Band 4** - per point of termination

(a) Premises-to-Premises

Term Plan	**Monthly Rate**	**Nonrecurring Charge**
Month-to-Month	$575.00	NONE
1-Year	380.00	NONE
3-Year	360.00	NONE
5-Year	340.00	NONE

Daily	**Monthly Rate**	**Nonrecurring Charge**
(Part-time)	$500.00	650.00

(b) Premises to Hub

Term Plan	**Monthly Rate**	**Nonrecurring Charge**
Month-to-Month	$575.00	NONE
1-Year	550.00	NONE
3-Year	525.00	NONE
5-Year	500.00	NONE

Daily	**Monthly Rate**	**Nonrecurring Charge**
(Part-time)	$400.00	$650.00

© 2022 Frontier Communications Parent, Inc. All rights reserved

7. Special Access Service (Cont'd)

7.5 Rates and Charges (Cont'd)

7.5.5 Video Service (Cont'd)

(F) 45 Mbps Digital Video Transport Service, (Cont'd)

(1) **Channel Terminations,** one-way only, **- Price Band 5**
-per point of termination

(a) Premises-to-Premises

Term Plan	Monthly Rate	Nonrecurring Charge
Month-to-Month	$575.00	NONE
1-Year	380.00	NONE
3-Year	360.00	NONE
5-Year	340.00	NONE

Daily	Monthly Rate	Nonrecurring Charge
(Part-time)	$500.00	650.00

(b) Premises to Hub

Term Plan	Monthly Rate	Nonrecurring Charge
Month-to-Month	$575.00	NONE
1-Year	550.00	NONE
3-Year	525.00	NONE
5-Year	500.00	NONE

Daily	Monthly Rate	Nonrecurring Charge
(Part-time)	$400.00	$650.00

© 2022 Frontier Communications Parent, Inc. All rights reserved

7. Special Access Service (Cont'd)

7.5 Rates and Charges (Cont'd)

7.5.5 Video Service (Cont'd)

(F) 45 Mbps Digital Video Transport Service, (Cont'd)

(1) **Channel Terminations** one-way only, **- Price Band 6**
-per point of termination

(a) Premises-to-Premises

Term Plan	**Monthly Rate**	**Nonrecurring Charge**
Month-to-Month	$575.00	NONE
1-Year	380.00	NONE
3-Year	360.00	NONE
5-Year	340.00	NONE

Daily	**Monthly Rate**	**Nonrecurring Charge**
(Part-time)	$500.00	650.00

(b) Premises to Hub

Term Plan	**Monthly Rate**	**Nonrecurring Charge**
Month-to-Month	$575.00	NONE
1-Year	550.00	NONE
3-Year	525.00	NONE
5-Year	500.00	NONE

Daily	**Monthly Rate**	**Nonrecurring Charge**
(Part-time)	$400.00	$650.00

© 2022 Frontier Communications Parent, Inc. All rights reserved

7. Special Access Service (Cont'd)

7.5 Rates and Charges (Cont'd)

7.5.5 Video Service (Cont'd)

© 2022 Frontier Communications Parent, Inc. All rights reserved

7. Special Access Service (Cont'd)

7.5 Rates and Charges (Cont'd)

7.5.5 Video Service (Cont'd)

(F) 45 Mbps Digital Video Transport Service (Cont'd)

(2) **Channel Mileage, Price Band 4**

Term Plan	**Monthly Rate**
Month-to-Month	
Fixed	$25.00
Per Mile	200.00
1-Year	
Fixed	20.00
Per Mile	150.00
3-Year	
Fixed	18.00
Per Mile	125.00
5-Year	
Fixed	16.00
Per Mile	110.00
Daily	
- Fixed	15.00
- Per Mile	100.00

© 2022 Frontier Communications Parent, Inc. All rights reserved

7. Special Access Service (Cont'd)

7.5 Rates and Charges (Cont'd)

7.5.5 Video Service (Cont'd)

(F) 45 Mbps Digital Video Transport Service (Cont'd)

(2) **Channel Mileage, Price Band 5**

Term Plan	**Monthly Rate**
Month-to-Month	
Fixed	$25.00
Per Mile	200.00
1-Year	
Fixed	20.00
Per Mile	150.00
3-Year	
Fixed	18.00
Per Mile	125.00
5-Year	
Fixed	16.00
Per Mile	110.00
Daily	
- Fixed	15.00
- Per Mile	100.00

© 2022 Frontier Communications Parent, Inc. All rights reserved

7. Special Access Service (Cont'd)

7.5 Rates and Charges (Cont'd)

7.5.5 Video Service (Cont'd)

(F) 45 Mbps Digital Video Transport Service (Cont'd)

(2) **Channel Mileage, Price Band 6**

Term Plan	**Monthly Rate**
Month-to-Month	
Fixed	$25.00
Per Mile	200.00
1-Year	
Fixed	20.00
Per Mile	150.00
3-Year	
Fixed	18.00
Per Mile	125.00
5-Year	
Fixed	16.00
Per Mile	110.00
Daily	
- Fixed	15.00
- Per Mile	100.00

© 2022 Frontier Communications Parent, Inc. All rights reserved

7. Special Access Service (Cont'd)

7.5 Rates and Charges (Cont'd)

7.5.5 Video Service (Cont'd)

(F) 45 Mbps Digital Video Transport Service (Cont'd)

(3) **Optional Features and Functions**

a) CODEC

	Monthly rate
Price Band 4	750.00
Price Band 5	750.00
Price Band 6	750.00

(G) Supertrunking Transport Video Service

(1) Channel Termination

	Monthly Rate	Nonrecurring Charge
- Transmit 750MHz		
Price Band 4	800.00	None
Price Band 5	800.00	None
Price Band 6	800.00	None
- Transmit 870MHz		
Price Band 4	850.00	None
Price Band 5	850.00	None
Price Band 6	850.00	None
- Receive 750MHz		
Price Band 4	525.00	None
Price Band 5	525.00	None
Price Band 6	525.00	None
- Receive 870MHz		
Price Band 4	600.00	None
Price Band 5	600.00	None
Price Band 6	600.00	None

© 2022 Frontier Communications Parent, Inc. All rights reserved

7. Special Access Service (Cont'd)

7.5 Rates and Charges (Cont'd)

7.5.5 Video Service (Cont'd)

(G) Supertrunking Transport Video Service (Cont'd)

(2) **Channel Mileage**

	Monthly Rates Fixed	Monthly Rates Per Mile
750 MHz		
Price Band 4		
0	None	None
Over 0	$26.00	$250.00
Price Band 5		
0	None	None
Over 0	$26.00	$250.00
Price Band 6		
0	None	None
Over 0	$26.00	$250.00
870 MHz		
Price Band 4		
0	None	None
Over 0	$85.00	$500.00
Price Band 5		
0	None	None
Over 0	$85.00	$500.00
Price Band 6		
0	None	None
Over 0	$85.00	$500.00

(3) **Optional Feature**

	Monthly Rate	Nonrecurring Charge With Initial Installation	Nonrecurring Charge Subsequent to Initial Installation
Video Bridging per Port			
Price Band 4	25.00	N/A	211.00*
Price Band 5	25.00	N/A	211.00*
Price Band 6	25.00	N/A	211.00*

* Applies to the addition of each occurrence of bridging service installed, subsequent to the initial service installation.

© 2022 Frontier Communications Parent, Inc. All rights reserved

7. Special Access Service (Cont'd)

7.5 Rates and Charges (Cont'd)

7.5.6 Wideband Analog Service

	Monthly Rates	Nonrecurring Charges
(A) Channel Termination - Per point of termination		
- 60 kHz - 108 kHz(AH-B)	ICB	ICB
- 312 kHz - 552 kHz(AH-C)	ICB	ICB
- 564 kHz - 3084 kHz(AH-D)	ICB	ICB
- 300 Hz - 18 kHz(WD-1)	ICB	ICB
- 28 kHz - 44 kHz(WD-2&3)	ICB	ICB

	Monthly Rates Fixed	Monthly Rates Per Mile
(B) Channel Mileage		
(1) 60 kHz - 108 kHz	ICB	ICB
(2) 312 kHz - 552 kHz	ICB	ICB
(3) 564 kHz - 3084 kHz	ICB	ICB
(4) 300 Hz - 18 kHz	ICB	ICB
(5) 28 kHz - 44 kHz	ICB	ICB

(C) Optional Features and Functions		
(1) Multiplexing		
(a) Mastergroup to Supergroup - Per arrangement	ICB	None
(b) Supergroup to Group - Per arrangement	ICB	None
(c) Group to Voice* - Per arrangement	ICB	None
Group to DS1** - Per arrangement	ICB	None

* A channel(s) of this Group level service to the Hub can be used for Program Audio or Metallic Services.

** Requires two 60-108 kHz Channel Terminations and Channel Mileage, one 1.544 Mbps Channel Mileage and either a 1.544 Mbps Channel Termination or a DS1 to Voice multiplexing optional feature, depending on whether the service terminates at a customer's premises or was purchased as a facility to a Telephone Company Hub for multiplexing to Voice Grade.

ICB rates and charges are filed in 7.6 following.

© 2022 Frontier Communications Parent, Inc. All rights reserved

7. Special Access Service (Cont'd)

7.5 Rates and Charges (Cont'd)

7.5.7 Wideband Data Service

	Monthly Rates	Nonrecurring Charges
(A) Channel Termination - Per point of termination		
- 19.2 or 18.75 kbps		
N-MSA	$306.80	None
Price Band 4	383.50	None
Price Band 5	383.50	None
Price Band 6	383.50	None
- 50.0 or 40.8 kbps		
N-MSA	318.60	None
Price Band 4	442.50	None
Price Band 5	442.50	None
Price Band 6	442.50	None
- 230.4 kbps		
N-MSA	236.00	None
Price Band 4	295.00	None
Price Band 5	295.00	None
Price Band 6	295.00	None

	Monthly Rates	
	Fixed	Per Mile
(B) Channel Mileage		
(1) 19.2 or 18.75 kbps		
N-MSA	$28.32	$7.55
Price Band 4	35.40	9.44
Price Band 5	35.40	9.44
Price Band 6	35.40	9.44
(2) 50.0 or 40.8 kbps		
N-MSA	28.32	7.55
Price Band 4	35.40	9.44
Price Band 5	35.40	9.44
Price Band 6	35.40	9.44
(3) 230.4 kbps		
N-MSA	28.32	7.55
Price Band 4	35.40	9.44
Price Band 5	35.40	9.44
Price Band 6	35.40	9.44

© 2022 Frontier Communications Parent, Inc. All rights reserved

7. Special Access Service (Cont'd)

7.5 Rates and Charges (Cont'd)

7.5.7 Wideband Data Service (Cont'd)

(C) Optional Features and Functions	Monthly Rate	Nonrecurring Charge
(1) Key Activated Transfer Arrangement - Per four port arrangement including control channel termination#		
N-MSA	$60.00	None
Price Band 4	75.00	None
Price Band 5	75.00	None
Price Band 6	75.00	None
303 Data Station - Per point of termination where provided		
N-MSA	$140.00	None
Price Band 4	175.00	None
Price Band 5	175.00	None
Price Band 6	175.00	None

The key activated control channel is rated as a Metallic Channel Termination and Channel Mileage, if applicable.

© 2022 Frontier Communications Parent, Inc. All rights reserved

7. Special Access Service (Cont'd)

7.5 Rates and Charges (Cont'd)

7.5.8 Digital Data Service

(A) Channel Termination
- Per point of termination

	Monthly Rates	Nonrecurring Charges First	Nonrecurring Charges Additional	
2.4 kbps				(C)
All Price Bands	1,436.85			
4.8 kbps				
All Price Bands	1,642.07			
9.6 kbps				
All Price Bands	1,847.18			
19.2 kbps				
All Price Bands	2,052.41			
56.0 kbps				
All Price Bands	2,336.86			
64.0 kbps				
All Price Bands	2,463.20			
Installation/Change				
All Price Bands		$ 3,937.84	$ 2,362.70	
Rearrangement				
All Price Bands		393.77	236.29	

(C)

© 2024 Frontier Communications Parent, Inc. All rights reserved

7. Special Access Service (Cont'd)

7.5 Rates and Charges (Cont'd)

7.5.8 Digital Data Service

Monthly Rates	Fixed	Per Mile	
(B) Channel Mileage			
2.4 kbps			(C)
All Price Bands	$1,026.35	$30.87	
4.8 kbps			
All Price Bands	1,231.44	32.93	
9.6 kbps			
All Price Bands	1,436.85	34.97	
19.2 kbps			
All Price Bands	1,642.07	37.02	
56 kbps			
All Price Bands	1,847.18	46.16	
64 kbps			
All Price Bands	2,052.41	51.37	(C)

© 2024 Frontier Communications Parent, Inc. All rights reserved

7. Special Access Service (Cont'd)

7.5 Rates and Charges (Cont'd)

7.5.8 Digital Data Service (Cont'd)

	Monthly Rates	Nonrecurring Charges
(C) Optional Features and Functions		
(1) Bridging, per port		
Price Band 4	22.80	None
Price Band 5	23.75	None
Price Band 6	24.70	None
(2) Loop Transfer Arrangement (Key activated* or Dial-up**), per four-port arrangement***		
Price Band 4	30.00	None
Price Band 5	31.25	None
Price Band 6	32.50	None

* The key activated control channel is rated as a Metallic Channel Termination and Channel Mileage, if applicable.

** The Dial-up option requires the customer to purchase the Controller Arrangement from 13.3.7 following.

*** An additional channel termination charge will apply whenever a spare channel is configured as a leg to the customer's premises. Additional channel mileage charges will also apply when the transfer arrangement is not located in the customer premises serving wire center.

© 2022 Frontier Communications Parent, Inc. All rights reserved

7. Special Access Service (Cont'd)

7.5 Rates and Charges (Cont'd)

7.5.8 Digital Data Service (Cont'd)

Optional Features and Functions (Cont'd)

	Monthly Rates	Nonrecurring Charges	
(3) Secondary Channel Capability			
- Per Channel Termination			
- 2.4 kbps			
Price Cap	$0.00	None	(C)
Price Band 4	0.00	None	
Price Band 5	0.00	None	
Price Band 6	0.00	None	
- 4.8 kbps			
Price Cap	$0.00	None	(C)
Price Band 4	0.00	None	
Price Band 5	0.00	None	
Price Band 6	0.00	None	
- 9.6 kbps			
Price Cap	$0.00	None	(C)
Price Band 4	0.00	None	
Price Band 5	0.00	None	
Price Band 6	0.00	None	
- 56.0 kbps			
Price Cap	$0.00	None	(C)
Price Band 4	0.00	None	
Price Band 5	0.00	None	
Price Band 6	0.00	None	

© 2022 Frontier Communications Parent, Inc. All rights reserved

7. Special Access Service (Cont'd)

7.5 Rates and Charges (Cont'd)

7.5.8.1 Bonded Digital Link Service

	Monthly Rates	Nonrecurring Charges
Intra-office Channel - Per DS0		
Price Band 4	7.00	None
Price Band 5	7.00	None
Price Band 6	7.00	None
Inter-office Channel - Per DS0		
Price Band 4	12.00	None
Price Band 5	12.00	None
Price Band 6	12.00	None

© 2022 Frontier Communications Parent, Inc. All rights reserved

7. Special Access Service (Cont'd)

7.5 Rates and Charges (Cont'd)

7.5.9 High Capacity Service

(A) Channel Termination
- Per point of termination

	Monthly Rates	Nonrecurring Charges First	Nonrecurring Charges Additional	
(1) Basic Service				
a) Electrical Interface 1.544Mbps/ DS1				
All Price Bands	$ 4,616.08			(C)
Installation/Change				
All Price Bands		$ 6,430.48	$ 4,331.61	
Rearrangement				
All Price Bands		$ 393.77	$ 236.29	
Coordinated Retermination				
All Price Bands		$ 7,481.90	N/A	(C)
3.152 Mbps/DS1C				
Rate Zone 1	ICB			
Rate Zone 2	ICB			
Rate Zone 3	ICB			

© 2024 Frontier Communications Parent, Inc. All rights reserved

7. Special Access Service (Cont'd)

7.5 Rates and Charges (Cont'd)

7.5.9 Reserved For Future Use

© 2022 Frontier Communications Parent, Inc. All rights reserved

7. Special Access Service (Cont'd)

7.5 Rates and Charges (Cont'd)

7.5.9 Reserved For Future Use

© 2022 Frontier Communications Parent, Inc. All rights reserved

7. Special Access Service (Cont'd)

7.5 Rates and Charges (Cont'd)

7.5.9 Reserved For Future Use

© 2022 Frontier Communications Parent, Inc. All rights reserved

7. Special Access Service (Cont'd)

7.5 Rates and Charges (Cont'd)

7.5.9 Reserved For Future Use

© 2022 Frontier Communications Parent, Inc. All rights reserved

7. Special Access Service (Cont'd)

7.5 Rates and Charges (Cont'd)

7.5.9 Reserved for Future Use

© 2022 Frontier Communications Parent, Inc. All rights reserved

7. Special Access Service (Cont'd)

7.5 Rates and Charges (Cont'd)

7.5.9 High Capacity Service (Cont'd)
(A) Channel Termination (Cont'd)
- Per point of termination (Cont'd)

(1) Basic Service (Cont'd)

(a) Electrical Interface (Cont'd)

44.736 Mbps/DS3 (Cont'd)
All Price Bands, Month-to-Month

# DS3 CTs Counted ##	Monthly Rate, Per CT ##	Nonrecurring Charge ##	
1	$14,984.45	$41.33	(C)
2	14,984.45	$41.33	
3	14,984.45	$41.33	
4	14,984.45	$41.33	
5	14,984.45	$41.33	
6	14,984.45	$41.33	
7	14,984.45	$41.33	
8	14,984.45	$41.33	
9	14,984.45	$41.33	
10	14,984.45	$41.33	
11	14,984.45	$41.33	
12	14,984.45	$41.33	
13	14,984.45	$41.33	
14	14,984.45	$41.33	
15	14,984.45	$41.33	
16	14,984.45	$41.33	
17	14,984.45	$41.33	
18	14,984.45	$41.33	
19	14,984.45	$41.33	
20	14,984.45	$41.33	
21	14,984.45	$41.33	
22	14,984.45	$41.33	
23	14,984.45	$41.33	
24	14,984.45	$41.33	
25 and Over	14,984.45	$41.33	
Coordinated Retermination	N/A	$5,985.52	
Month to Month Per DS3 CT at each Primary Premise	$24,014.49	$15,751.40	
Per DS3 CT at each Secondary Premises	$50,443.91	$15,751.40	(C)

Effective November 30, 2021 monthly rates for new DS3 High Capacity Services channel terminations at a primary premises will be billed at the Month to Month Per DS3 CT rate in 7.5.9 and the tapered schedule rate will not apply. DS3 High Capacity Service channel terminations at a primary premise in service prior to November 30, 2021 and billing rates on the tapered schedule will continue on the tapered schedule rate until the tapered schedule rate exceeds the Month to Month Per DS3 CT rate in 7.5.9 at which time the DS3 High Capacity channel termination at the primary premise will be converted to the Month to Month Per DS3 CT rate in 7.5.9.

© 2024 Frontier Communications Parent, Inc. All rights reserved

7. Special Access Service (Cont'd)

7.5 Rates and Charges (Cont'd)

7.5.9 Reserved for future Use

© 2022 Frontier Communications Parent, Inc. All rights reserved

7. Special Access Service (Cont'd)

7.5 Rates and Charges (Cont'd)

7.5.9 Reserved for future use

© 2022 Frontier Communications Parent, Inc. All rights reserved

7. Special Access Service (Cont'd)

7.5 Rates and Charges (Cont'd)

7.5.9 Reserved for future use

© 2022 Frontier Communications Parent, Inc. All rights reserved

7. Special Access Service (Cont'd)

7.5 Rates and Charges (Cont'd)

7.5.9 Reserved for Future Use

© 2022 Frontier Communications Parent, Inc. All rights reserved

7. Special Access Service (Cont'd)

7.5 Rates and Charges (Cont'd)

7.5.9 Reserved for Future Use

© 2022 Frontier Communications Parent, Inc. All rights reserved

7. Special Access Service (Cont'd)

7.5 Rates and Charges (Cont'd)

7.5.9 High Capacity Service (Cont'd)

(A) Channel Termination (Cont'd)
- Per point of termination (Cont'd)

(1) Basic Service (Cont'd)

(a) Electrical Interface (Cont'd)

44.736 Mbps/DS3 All Price Bands, Base Rates # (C)

# DS3 CTs Counted ##	Monthly Rate, Per CT ##	Nonrecurring Charge ##
1	$14,984.45	$41.33
2	14,984.45	$41.33
3	14,984.45	$41.33
4	14,984.45	$41.33
5	14,984.45	$41.33
6	14,984.45	$41.33
7	14,984.45	$41.33
8	14,984.45	$41.33
9	14,984.45	$41.33
10	14,984.45	$41.33
11	14,984.45	$41.33
12	14,984.45	$41.33
13	14,984.45	$41.33
14	14,984.45	$41.33
15	14,984.45	$41.33
16	14,984.45	$41.33
17	14,984.45	$41.33
18	14,984.45	$41.33
19	14,984.45	$41.33
20	14,984.45	$41.33
21	14,984.45	$41.33
22	14,984.45	$41.33
23	14,984.45	$41.33
24	14,984.45	$41.33
25 and Over	14,984.45	$41.33
Coordinated Retermination	N/A	$5,985.52
Per DS3 CT at each Secondary Premises	$45,858.06	$15,751.40

(C)

Service Offer is limited. See Footnote on page 7-221

See Footnote on page 7-310

© 2024 Frontier Communications Parent, Inc. All rights reserved

7. Special Access Service (Cont'd)

7.5 Rates and Charges (Cont'd)

7.5.9 Reserved for Future Use

© 2022 Frontier Communications Parent, Inc. All rights reserved

7. Special Access Service (Cont'd)

7.5 Rates and Charges (Cont'd)

7.5.9 Reserved for Future Use

© 2022 Frontier Communications Parent, Inc. All rights reserved

7. Special Access Service (Cont'd)

7.5 Rates and Charges (Cont'd)

7.5.9 Reserved for Future Use

© 2022 Frontier Communications Parent, Inc. All rights reserved

7. Special Access Service (Cont'd)

7.5 Rates and Charges (Cont'd)

High Capacity Service (Cont'd)

(A) Channel Termination (Cont'd)
- Per point of termination (Cont'd)

(1) Basic Service (Cont'd)

(a) Optical Interface - Not Available

© 2022 Frontier Communications Parent, Inc. All rights reserved

7. Special Access Service (Cont'd)

7.5 Rates and Charges (Cont'd)

7.5.9 Reserved for Future Use

© 2022 Frontier Communications Parent, Inc. All rights reserved

7. Special Access Service (Cont'd)

7.5 Rates and Charges (Cont'd)

7.5.9 Reserved for Future Use

© 2022 Frontier Communications Parent, Inc. All rights reserved

7. Special Access Service (Cont'd)

7.5 Rates and Charges (Cont'd)

7.5.9 Reserved for Future Use

© 2022 Frontier Communications Parent, Inc. All rights reserved

7. Special Access Service (Cont'd)

7.5 Rates and Charges (Cont'd)

7.5.9 Reserved for Future Use

© 2022 Frontier Communications Parent, Inc. All rights reserved

7. Special Access Service (Cont'd)

7.5 Rates and Charges (Cont'd)

7.5.9 Reserved for Future Use

© 2022 Frontier Communications Parent, Inc. All rights reserved

7. Special Access Service (Cont'd)

7.5 Rates and Charges (Cont'd)

7.5.9 Reserved for Future Use

© 2022 Frontier Communications Parent, Inc. All rights reserved

7. Special Access Service (Cont'd)

7.5 Rates and Charges (Cont'd)

7.5.9 Reserved for Future Use

© 2022 Frontier Communications Parent, Inc. All rights reserved

7. Special Access Service (Cont'd)

7.5 Rates and Charges (Cont'd)

7.5.9 Reserved for Future Use

© 2022 Frontier Communications Parent, Inc. All rights reserved

7. Special Access Service (Cont'd)

7.5 Rates and Charges (Cont'd)

7.5.9 High Capacity Service (Cont'd)

(A) Channel Termination (Cont'd)
- Per point of termination (Cont'd)

(1) Basic Service (Cont'd)

	Monthly Rates	Nonrecurring Charges	
(c) Short-Term DS3			
All Price Bands	$58,754.63	$28,352.47	(C)

© 2024 Frontier Communications Parent, Inc. All rights reserved

7. Special Access Service (Cont'd)

7.5 Rates and Charges (Cont'd)

7.5.9 High Capacity Service (Cont'd)

	Monthly Rates Fixed	per Mile	
(B) Channel Mileage			
(1) Basic Service and Month-to-Month			
(a) 64 Kbps*			
All Price Bands	$ 269.35	None	(C)
(b) 1.544 Mbps			
All Price Bands	$ 866.34	$ 431.10	(C)
(c) 3.152 Mbps	ICB		
(d) 44.736 Mbps			
Month-to-Month & Base Rates #			
All Price Bands	$ 12,994.87	$ 2,441.95	(C)

Service Offer is limited. See Footnote on page 7-221 & 7-232

* Applies to through-connections of 2.4, 4.8, 9.6, 56.0 and 64 Kbps.

© 2024 Frontier Communications Parent, Inc. All rights reserved

7. Special Access Service (Cont'd)

7.5 Rates and Charges (Cont'd)

7.5.9 High Capacity Service (Cont'd)

(B) Channel Mileage (Cont'd)

(1) Basic Service and Month-to-Month (Cont'd)

(e) 44.736 Mbps (Cont'd)

© 2022 Frontier Communications Parent, Inc. All rights reserved

7. Special Access Service (Cont'd)

7.5 Rates and Charges (Cont'd)

7.5.9 High Capacity Service (Cont'd)

(B) Channel Mileage (Cont'd)

(1) Basic Service and Month-to-Month (Cont'd)

(e) 44.736 Mbps (Cont'd)

© 2022 Frontier Communications Parent, Inc. All rights reserved

7. Special Access Service (Cont'd)

7.5 Rates and Charges (Cont'd)

7.5.9 High Capacity Service (Cont'd)

(C) Optional Features and Functions

(1) Multiplexing

	Monthly Rates	Nonrecurring Charges	
DS3 to DS1, per arrangement			
(a) Month-to-Month & (b) Base Rates #			
All Price Bands	$ 11,895.43	$ 15.74	(C)
DS1C to DS1 - per arrangement	ICB	None	
DS1 to Voice* - per arrangement			
All Price Bands	$ 3,985.09	None	(C)

Service Offer is limited. See Footnote on page 7-221 & 7-232

* A channel(s) of this DS1 to the Hub can be used for WATS Access Line, Program Audio or Metallic Services.

© 2024 Frontier Communications Parent, Inc. All rights reserved

7. Special Access Service (Cont'd)

7.5 Rates and Charges (Cont'd)

7.5.9 High Capacity Service (Cont'd)

(C) Optional Features and Functions (Cont'd)

(1) Multiplexing (Cont'd)

	Monthly Rates	Nonrecurring Charges	
DS1 to Digital* - per arrangement			
All Price Bands	$ 3,985.09	None	(C)
DS1 TO DS0 - per arrangement			
All Price Bands	$ 3,985.09	None	
- Conversion to Secondary Channel Capability, per Arrangement Converted			
All Price Bands	None	$ 3,081.79	(C)

* A channel(s) of this DS1 to the Hub can be used for WATS Access Line, Voice Grade, Program Audio, or Metallic Services.

© 2024 Frontier Communications Parent, Inc. All rights reserved

7. Special Access Service (Cont'd)

7.5 Rates and Charges (Cont'd)

7.5.9 High Capacity Service (Cont'd)

	Monthly Rates	Nonrecurring Charges	
(C) Optional Features and Functions (Cont'd)			
(1) Multiplexing (Cont'd)			
DS0 to Subrates - per arrangement			
- Up to 20 2.4 kbps services			
All Price Bands	$ 2,205.20	None	(C)
- Up to 10 4.8 kbps services			
All Price Bands	$ 1,732.64	None	
- Up to 5 9.6 kbps services			
All Price Bands	$ 1,260.10	None	(C)

© 2024 Frontier Communications Parent, Inc. All rights reserved

7. Special Access Service (Cont'd)

7.5 Rates and Charges (Cont'd)

7.5.9 High Capacity Service (Cont'd)

		Monthly Rates	Nonrecurring Charges
(C) Optional Features and Functions (Cont'd)			
(2) Automatic Loop Transfer - Per arrangement*			
Price Band 4		150.00	None
Price Band 5		150.00	None
Price Band 6		150.00	None
(3) Transfer Arrangement (key activated** or dial up***), - Per four port arrangement including control channel termination****			
Price Band 4		60.00	None
Price Band 5		60.00	None
Price Band 6		60.00	None
(4) Shared Network Arrangement			
- Processing Charge Per Service Order			
Price Cap	N	None	50.00
Price Band 4	N	None	50.00
Price Band 5	N	None	50.00
Price Band 6	N	None	50.00

* An additional Channel Termination charge will apply whenever the spare line is provided as a leg to the customer premises.

** The key activated control channel is rated as a Metallic Channel Termination and Channel Mileage, if applicable.

*** The Dial-up option requires the customer to purchase the Controller Arrangement from 13.3.7 following.

**** An additional Channel Termination charge will apply whenever a spare channel is configured as a leg to the customer's premises. Additional channel mileage charges will also apply when the transfer arrangement is not located in the customer premises serving wire center.

© 2022 Frontier Communications Parent, Inc. All rights reserved

7. Special Access Service (Cont'd)

7.5 Rates and Charges (Cont'd)

7.5.9 High Capacity Service (Cont'd)

(C) Optional Features and Functions (Cont'd)

(5) Alternate Serving Wire Center

	Monthly Rates	Nonrecurring Charges
1.544 Mbps/DS1 and DSEF DS1 on separated VT1.5s, per point of termination		
Rate Zone 1	$25.00	None
Rate Zone 2	25.00	None
Rate Zone 3	25.00	None
Price Band 4	25.00	None
Price Band 5	25.00	None
Price Band 6	25.00	None
44.736 Mbps/DS3 (Optical or Electrical), and DSEF DS3, STS1, and DS1s on Grouped VT1.5s, per point of termination		
- Month-to-Month		
Rate Zone 1	250.00	None
Rate Zone 2	250.00	None
Rate Zone 3	250.00	None
Price Band 4	250.00	None
Price Band 5	250.00	None
Price Band 6	250.00	None
- 3 Year RSPP		
Rate Zone 1	225.00	None
Rate Zone 2	225.00	None
Rate Zone 3	225.00	None
Price Band 4	225.00	None
Price Band 5	225.00	None
Price Band 6	225.00	None
- 5 Year RSPP		
Rate Zone 1	200.00	None
Rate Zone 2	200.00	None
Rate Zone 3	200.00	None
Price Band 4	200.00	None
Price Band 5	200.00	None
Price Band 6	200.00	None

© 2022 Frontier Communications Parent, Inc. All rights reserved

7. Special Access Service (Cont'd)

7.5 Rates and Charges (Cont'd)

© 2022 Frontier Communications Parent, Inc. All rights reserved

7. Special Access Service (Cont'd)

7.5 Rates and Charges (Cont'd)

7.5.10 RESERVED FOR FUTURE USE

7.5.11 RESERVED FOR FUTURE USE

© 2022 Frontier Communications Parent, Inc. All rights reserved

7. Special Access Service (Cont'd)

7.5 Rates and Charges (Cont'd)

7.5.12 RESERVED FOR FUTURE USE

© 2022 Frontier Communications Parent, Inc. All rights reserved

7. Special Access Service (Cont'd)

7.5 Rates and Charges (Cont'd)

7.5.12 RESERVED FOR FUTURE USE

© 2022 Frontier Communications Parent, Inc. All rights reserved

7. Special Access Service (Cont'd)

7.5 Rates and Charges (Cont'd)

7.5.13 RESERVED FOR FUTURE USE

7.5.14 RESERVED FOR FUTURE USE

7.5.15 RESERVED FOR FUTURE USE

© 2022 Frontier Communications Parent, Inc. All rights reserved

7. Special Access Service (Cont'd)

7.5 Rates and Charges (Cont'd)

7.5.16 Reserved for Future Use

© 2022 Frontier Communications Parent, Inc. All rights reserved

7. Special Access Service (Cont'd)

7.5 Rates and Charges (Cont'd)

7.5.16 Reserved for Future Use (C)

© 2022 Frontier Communications Parent, Inc. All rights reserved

7. Special Access Service (Cont'd)

7.5 Rates and Charges (Cont'd)

7.5.16 Reserved for Future Use (C)

© 2022 Frontier Communications Parent, Inc. All rights reserved

7. Special Access Service (Cont'd)

7.5 Rates and Charges (Cont'd)

7.5.16 Term Pricing Plans

(A) 2-year Commitment Period – DDS All Price Bands # Not Available (C)

Effective November 19, 2021 DDS Term Pricing Plans (TPP) are no longer permitted. DDS TPP in effect as of November 19, 2021 may continue the existing term but will not be eligible to extend, renew, reenroll in, convert to a new term period, or in any other way continue their existing plan beyond its current expiration. At expiration of a TPP, the service will convert to the Month to Month Rate. If at any time an existing customer terminates its DDS TPP, the customer may not re-subscribe to the plan.

© 2023 Frontier Communications Parent, Inc. All rights reserved

7. Special Access Service (Cont'd)

7.5 Rates and Charges (Cont'd)

7.5.16 Term Pricing Plans (Cont'd)

(A) 2-year Commitment Period – DS1 #

Service	Monthly Rate	Nonrecurring Charges First	Nonrecurring Charges Additional	
Per Channel Termination				(C)
1.544 Mbps/DS1				
All Price Bands	$ 3,923.65			
Installation/Change				
All Price Bands		$ 393.77	$ 236.29	
Grandfathered Market		393.77	236.29	
Rearrangement				
All Price Bands		393.77	236.29	
Coordinated Retermination				
All Price Bands		$5,985.52	N/A	(C)

Service Offer is limited. See Footnote on page 7-346

© 2024 Frontier Communications Parent, Inc. All rights reserved

7. Special Access Service (Cont'd)

7.5 Rates and Charges (Cont'd)

7.5.16 Term Pricing Plans (Cont'd)

(A) 2-year Commitment Period – DS1 (Cont"d) #

Service	Monthly Rate	Nonrecurring Charges First	Nonrecurring Charges Additional	
Channel Mileage				
Fixed				
All Price Bands	$ 736.40			(C)
Per mile				
All Price Bands	$ 366.39			
Multiplexing				
DS1 to Voice DS1 to Digital DS1 to DS0				
All Price Bands	$3,387.34			(C)

Service Offer is limited. See Footnote on page 7-346

© 2024 Frontier Communications Parent, Inc. All rights reserved

7. Special Access Service (Cont'd)

7.5 Rates and Charges (Cont'd)

7.5.16 Reserved for Future Use

© 2022 Frontier Communications Parent, Inc. All rights reserved

7. Special Access Service (Cont'd)

7.5 Rates and Charges (Cont'd)

7.5.16 Reserved for Future Use (C)

© 2022 Frontier Communications Parent, Inc. All rights reserved

7. Special Access Service (Cont'd)

7.5 Rates and Charges (Cont'd)

7.5.16 Reserved for Future Use (C)

© 2022 Frontier Communications Parent, Inc. All rights reserved

7. Special Access Service (Cont'd)

7.5 Rates and Charges (Cont'd)

7.5.16 Term Pricing Plans (Cont'd)

(B) 3-year Commitment Period – DDS All Price Bands # Not Available (C)

Effective November 19, 2021 DDS Term Pricing Plans (TPP) are no longer permitted. DDS TPP in effect as of November 19, 2021 may continue the existing term but will not be eligible to extend, renew, reenroll in, convert to a new term period, or in any other way continue their existing plan beyond its current expiration. At expiration of a TPP, the service will convert to the Month to Month Rate. If at any time an existing customer terminates its DDS TPP, the customer may not re-subscribe to the plan.

© 2023 Frontier Communications Parent, Inc. All rights reserved

7. Special Access Service (Cont'd)

7.5 Rates and Charges (Cont'd)

7.5.16 Term Pricing Plans (Cont'd)

(B) 3-year Commitment Period – DS1#

Service	Monthly Rate	Nonrecurring Charges First	Nonrecurring Charges Additional	
Per Channel Termination				
1.544 Mbps/DS1				(C)
All Price Bands	$ 3,462.16			
Installation/Change				
All Price Bands 4		$393.77	$236.29	
Rearrangement				
All Price Bands		$393.77	$236.29	
Coordinated Retermination				
All Price Bands		$5,985.52	N/A	(C)

Service Offer is limited. See Footnote on page 7-352

© 2024 Frontier Communications Parent, Inc. All rights reserved

7. Special Access Service (Cont'd)

7.5 Rates and Charges (Cont'd)

7.5.16 Term Pricing Plans (Cont'd)

(B) 3-year Commitment Period – DS1 (Cont'd) #

Service	Monthly Rate	Nonrecurring Charges First	Nonrecurring Charges Additional	
Channel Mileage				
Fixed				
All Price Bands	$ 649.76			(C)
Per mile				
All Price Bands	$ 323.37			
Multiplexing				
DS1 to Voice				
DS1 to Digital				
DS1 to DS0				
All Price Bands	$ 2,988.83			(C)

Service Offer is limited. See Footnote on page 7-352

© 2024 Frontier Communications Parent, Inc. All rights reserved

7. Special Access Service (Cont'd)

7.5 Rates and Charges (Cont'd)

7.5.16 Reserved for Future Use

© 2022 Frontier Communications Parent, Inc. All rights reserved

7. Special Access Service (Cont'd)

7.5 Rates and Charges (Cont'd)

7.5.16 Reserved For Future Use (C)

© 2022 Frontier Communications Parent, Inc. All rights reserved

7. Special Access Service (Cont'd)

7.5 Rates and Charges (Cont'd)

7.5.16 Reserved For Future Use (C)

© 2022 Frontier Communications Parent, Inc. All rights reserved

7. Special Access Service (Cont'd)

7.5 Rates and Charges (Cont'd)

7.5.16 Term Pricing Plans (Cont'd)

(C) 5-year Commitment Period –DDS All Price Bands # Not Available (C)

Effective November 19, 2021 DDS Term Pricing Plans (TPP) are no longer permitted. DDS TPP in effect as of November 19, 2021 may continue the existing term but will not be eligible to extend, renew, reenroll in, convert to a new term period, or in any other way continue their existing plan beyond its current expiration. At expiration of a TPP, the service will convert to the Month to Month Rate. If at any time an existing customer terminates its DDS TPP, the customer may not re-subscribe to the plan.

© 2023 Frontier Communications Parent, Inc. All rights reserved

7. Special Access Service (Cont'd)

7.5 Rates and Charges (Cont'd)

7.5.16 Term Pricing Plans (Cont'd)

(C) 5-year Commitment Period – DS1#

Service	Monthly Rate	Nonrecurring Charges First	Nonrecurring Charges Additional	
Per Channel Termination				
1.544 Mbps/DS1				(C)
All Price Bands	$ 3,000.47			
Installation/Change				
All Price Bands		$ 393.77	$ 236.29	
Rearrangement				
All Price Bands		$ 393.77	$ 236.29	
Coordinated Retermination				
All Price Bands		$ 5,985.52	N/A	(C)

Service Offer is limited. See Footnote on page 7-358

© 2024 Frontier Communications Parent, Inc. All rights reserved

7. Special Access Service (Cont'd)

7.5 Rates and Charges (Cont'd)

7.5.16 Term Pricing Plans (Cont'd)

(C) 5-year Commitment Period – DS1 (Cont'd) #

Service	Monthly Rate	Nonrecurring Charges First	Nonrecurring Charges Additional	
Channel Mileage				
Fixed				
All Price Bands	$ 563.10			(C)
Per mile				
All Price Bands	$ 220.51			
Multiplexing				
DS1 to Voice DS1 to Digital DS1 to DS0				
All Price Bands	$ 2,590.30			(C)

Service Offer is limited. See Footnote on page 7-358.

© 2024 Frontier Communications Parent, Inc. All rights reserved

7. Special Access Service (Cont'd)

7.5 Rates and Charges (Cont'd)

7.5.16 Term Pricing Plans (Cont'd)

7-year Commitment Period DS1 #

Service	Monthly Rate	Nonrecurring Charges First	Nonrecurring Charges Additional	
Per Channel Termination				
1.544 Mbps/DS1				(C)
All Price Bands	$ 2,769.73			
Installation/Change				
All Price Bands		$393.77	$236.29	
Rearrangement				
All Price Bands		$393.77	$236.29	
Coordinated Retermination				
All Price Bands		$5,985.52	N/A	(C)

Effective November 19, 2021 DS1 Term Pricing Plans (TPP) are no longer permitted. DS1 TPP in effect as of November 19, 2021 may continue the existing term but will not be eligible to extend, renew, reenroll in, convert to a new term period, or in any other way continue their existing plan beyond its current expiration. At expiration of a TPP, the service will convert to the Month to Month Rate. If at any time an existing customer terminates its DS1 TPP, the customer may not re-subscribe to the plan.

© 2024 Frontier Communications Parent, Inc. All rights reserved

7. Special Access Service (Cont'd)

7.5 Rates and Charges (Cont'd)

7.5.16 Term Pricing Plans (Cont'd)

7-year Commitment Period DS1 (Cont'd) #

Service	Monthly Rate	Nonrecurring Charges First	Nonrecurring Charges Additional	
Channel Mileage				
Fixed				
All Price Bands	$ 519.79			(C)
Per mile				
All Price Bands	$ 204.77			
Multiplexing				
DS1 to Voice				
DS1 to Digital				
DS1 to DS0				
All Price Bands	$ 2,391.05			(C)

Service Offer is limited. See Footnote on page 7-361

© 2024 Frontier Communications Parent, Inc. All rights reserved

7. Special Access Service (Cont'd)

7.5 Rates and Charges (Cont'd)

7.5.17 Reserved

© 2022 Frontier Communications Parent, Inc. All rights reserved

7. Special Access Service (Cont'd)

7.5 Rates and Charges (Cont'd)

7.5.18 Reserved

© 2022 Frontier Communications Parent, Inc. All rights reserved

7. Special Access Service (Cont'd)

7.5 Rates and Charges (Cont'd)

7.5.18 Reserved

© 2022 Frontier Communications Parent, Inc. All rights reserved

7. Special Access Service (Cont'd)

7.5 Rates and Charges (Cont'd)

7.5.18 Reserved

© 2022 Frontier Communications Parent, Inc. All rights reserved

7. Special Access Service (Cont'd)

7.5 Rates and Charges (Cont'd)

7.5.18 Reserved

© 2022 Frontier Communications Parent, Inc. All rights reserved

7. Special Access Service (Cont'd)

7.5 Rates and Charges (Cont'd)

7.5.18 Reserved

© 2022 Frontier Communications Parent, Inc. All rights reserved

7. Special Access Service (Cont'd)

7.5 Rates and Charges (Cont'd)

7.5.18 Reserved

© 2022 Frontier Communications Parent, Inc. All rights reserved

7. Special Access Service (Cont'd)

7.5 Rates and Charges (Cont'd)

7.5.18 Reserved

© 2022 Frontier Communications Parent, Inc. All rights reserved

7. Special Access Service (Cont'd)

7.5 Rates and Charges (Cont'd)

7.5.18 Reserved

© 2022 Frontier Communications Parent, Inc. All rights reserved

7. Special Access Service (Cont'd)

7.5 Rates and Charges (Cont'd)

7.5.18 Reserved

© 2022 Frontier Communications Parent, Inc. All rights reserved

7. Special Access Service (Cont'd)

7.5 Rates and Charges (Cont'd)

7.5.18 Reserved

© 2022 Frontier Communications Parent, Inc. All rights reserved

7. Special Access Service (Cont'd)

7.5 Rates and Charges (Cont'd)

7.5.18 Reserved

© 2022 Frontier Communications Parent, Inc. All rights reserved

7. Special Access Service (Cont'd)

7.5 Rates and Charges (Cont'd)

7.5.18 Reserved

© 2022 Frontier Communications Parent, Inc. All rights reserved

7. Special Access Service (Cont'd)

7.5 Rates and Charges (Cont'd)

7.5.18 Reserved

© 2022 Frontier Communications Parent, Inc. All rights reserved

7. Special Access Service (Cont'd)

7.5 Rates and Charges (Cont'd)

7.5.18 Reserved

© 2022 Frontier Communications Parent, Inc. All rights reserved

7. Special Access Service (Cont'd)

7.5 Rates and Charges (Cont'd)

7.5.18 Reserved

7.5.19 Reserved

© 2022 Frontier Communications Parent, Inc. All rights reserved

7. Special Access Service (Cont'd)

7.5 Rates and Charges (Cont'd)

7.5.20 Dedicated SONET Shared Dual Path

(A) DSSDP for DS1 or DSEF DS1
on a Separated VT1.5
- Per point of termination

Term	Monthly Rate
Month-to-Month	
Price Cap	$40.00
Price Band 4	40.00
Price Band 5	40.00
Price Band 6	40.00
2-Year	
Price Cap	35.00
Price Band 4	35.00
Price Band 5	35.00
Price Band 6	35.00
3-Year	
Price Cap	35.00
Price Band 4	35.00
Price Band 5	35.00
Price Band 6	35.00
5-Year	
Price Cap	30.00
Price Band 4	30.00
Price Band 5	30.00
Price Band 6	30.00
7-Year	
Price Cap	30.00
Price Band 4	30.00
Price Band 5	30.00
Price Band 6	30.00

© 2022 Frontier Communications Parent, Inc. All rights reserved

7. Special Access Service (Cont'd)

7.5 Rates and Charges (Cont'd)

7.5.20 Dedicated SONET Shared Dual Path (Cont'd)

(B) DSSDP DS1 Standby Mileage
- per mile

Month-to-Month	
Price Band 4	6.50
Price Band 5	6.50
Price Band 6	6.50
2-Year	
Price Band 4	5.50
Price Band 5	5.50
Price Band 6	5.50
3-Year	
Price Band 4	5.50
Price Band 5	5.50
Price Band 6	5.50
5-Year	
Price Band 4	4.50
Price Band 5	4.50
Price Band 6	4.50
7-Year	
Price Band 4	4.50
Price Band 5	4.50
Price Band 6	4.50

© 2022 Frontier Communications Parent, Inc. All rights reserved

7. Special Access Service (Cont'd)

7.5 Rates and Charges (Cont'd)

7.5.20 Dedicated SONET Shared Dual Path (Cont'd)

(C) DS3, DSEF DS3, DSSSP, DSEF, DSSSP, and DSEF DS1s w/ Grouped VT1.5s
- per point of termination

Month-to-Month	
Price Cap	400.00
Price Band 4	400.00
Price Band 5	400.00
Price Band 6	400.00
3-Year	
Price Cap	350.00
Price Band 4	350.00
Price Band 5	350.00
Price Band 6	350.00
5-Year	
Price Cap	300.00
Price Band 4	300.00
Price Band 5	300.00
Price Band 6	300.00

DSSDP DS3 Standby Mileage
- per mile

Month-to-Month	
Price Band 4	65.00
Price Band 5	65.00
Price Band 6	65.00
3-Year	
Price Band 4	55.00
Price Band 5	55.00
Price Band 6	55.00
5-Year	
Price Band 4	45.00
Price Band 5	45.00
Price Band 6	45.00

© 2022 Frontier Communications Parent, Inc. All rights reserved

7. Special Access Service (Cont'd)

7.5 Rates and Charges (Cont'd)

7.5.20 Dedicated SONET Shared Dual Path (Cont'd)

	Monthly Rate
(E) DS1 to DS3 Network Interface Conversions	
Per DS3	
Price Band 4	600.00
Price Band 5	600.00
Price Band 6	600.00
Per DS1	
Price Band 4	30.00
Price Band 5	30.00
Price Band 6	30.00

(F) DSSDP Nonrecurring Charges

	First	Additional
1. Installation of DS1, DS3, DSSSP, DSEF DSSSP, DSEF DS3, or DSEF DS1 - per point of termination		
Price Cap	$1.00	$0.75
Price Band 4	1.00	0.75
Price Band 5	1.00	0.75
Price Band 6	1.00	0.75
2. Installation of DS1 to DS3 Network Interface Converter - per M1/3 Mux		
Price Band 4	600.00	
Price Band 5	600.00	
Price Band 6	600.00	
- per DS1		
Price Band 4	25.00	
Price Band 5	25.00	
Price Band 6	25.00	

© 2022 Frontier Communications Parent, Inc. All rights reserved

7. Special Access Service (Cont'd)

7.5 Rates and Charges (Cont'd)

7.5.21 Dedicated SONET Entrance Facilities (DSEF)#

(A) Per **Price Cap**

STS1/51.84Mbps Termination*,	Monthly Rate 3 Year Term	Monthly Rate 5 Year Term
1	2,150.00	1,800.00
2	2,100.00	1,600.00
3	1,700.00	1,500.00
4	1,175.00	1,100.00
5	1,000.00	890.00
6	783.00	750.00
7	699.00	640.00
8	636.00	560.00
9	588.00	500.00
10	548.00	440.00
11	516.00	395.00
12	489.00	365.00
13	480.00	362.00
14	477.00	358.00
15	475.00	355.00
16	472.00	353.00
17	470.00	350.00
18	467.00	348.00
19	465.00	345.00
20	462.00	340.00
21	459.00	338.00
22	456.00	336.00
23	454.00	333.00
24	451.00	331.00

* Interface sold separately.
# Service availability limited. Refer to # footnote on Page 7-149.

© 2022 Frontier Communications Parent, Inc. All rights reserved

7. Special Access Service (Cont'd)

7.5 Rates and Charges (Cont'd)

7.5.21 Dedicated SONET Entrance Facilities (DSEF)# (Cont'd)

(A) Per **Price Cap**

STS1/51.84Mbps Termination*,	Monthly Rate 3 Year Term	Monthly Rate 5 Year Term
25	449.00	329.00
26	446.00	327.00
27	444.00	325.00
28	441.00	323.00
29	438.00	321.00
30	435.00	319.00
31	433.00	317.00
32	430.00	315.00
33	428.00	312.00
34	425.00	310.00
35	423.00	308.00
36	420.00	306.00
37	407.00	304.00
38	404.00	302.00
39	402.00	298.00
40	399.00	294.00
41	396.00	288.00
42	393.00	283.00
43	391.00	278.00
44	388.00	273.00
45	386.00	267.00
46	383.00	262.00
47	381.00	257.00
48 and up	378.00	252.00

* Interface sold separately

Service availability limited. Refer to # footnote on Page 7-149.

© 2022 Frontier Communications Parent, Inc. All rights reserved

7. Special Access Service (Cont'd)

7.5 Rates and Charges (Cont'd)

7.5.21 Dedicated SONET Entrance Facilities (DSEF)#

(A) Per **Price Band 4**

STS1/51.84Mbps Termination*,	Monthly Rate 3 Year Term	Monthly Rate 5 Year Term
1	2,150.00	1,800.00
2	2,100.00	1,600.00
3	1,700.00	1,500.00
4	1,175.00	1,100.00
5	1,000.00	890.00
6	783.00	750.00
7	699.00	640.00
8	636.00	560.00
9	588.00	500.00
10	548.00	440.00
11	516.00	395.00
12	489.00	365.00
13	480.00	362.00
14	477.00	358.00
15	475.00	355.00
16	472.00	353.00
17	470.00	350.00
18	467.00	348.00
19	465.00	345.00
20	462.00	340.00
21	459.00	338.00
22	456.00	336.00
23	454.00	333.00
24	451.00	331.00

* Interface sold separately.

Service availability limited. Refer to # footnote on Page 7-149.

© 2022 Frontier Communications Parent, Inc. All rights reserved

7. Special Access Service (Cont'd)

7.5 Rates and Charges (Cont'd)

7.5.21 Dedicated SONET Entrance Facilities (DSEF)#

(A) Per **Price Band 4**

STS1/51.84Mbps Termination*,	Monthly Rate 3 Year Term	Monthly Rate 5 Year Term
25	449.00	329.00
26	446.00	327.00
27	444.00	325.00
28	441.00	323.00
29	438.00	321.00
30	435.00	319.00
31	433.00	317.00
32	430.00	315.00
33	428.00	312.00
34	425.00	310.00
35	423.00	308.00
36	420.00	306.00
37	407.00	304.00
38	404.00	302.00
39	402.00	298.00
40	399.00	294.00
41	396.00	288.00
42	393.00	283.00
43	391.00	278.00
44	388.00	273.00
45	386.00	267.00
46	383.00	262.00
47	381.00	257.00
48 and up	378.00	252.00

* Interface sold separately.

Service availability limited. Refer to # footnote on Page 7-149.

© 2022 Frontier Communications Parent, Inc. All rights reserved

7. Special Access Service (Cont'd)

7.5 Rates and Charges (Cont'd)

7.5.21 Dedicated SONET Entrance Facilities (DSEF)#

(A) Per **Price Band 5**

STS1/51.84Mbps Termination*,	Monthly Rate 3 Year Term	Monthly Rate 5 Year Term
1	2,150.00	1,800.00
2	2,100.00	1,600.00
3	1,700.00	1,500.00
4	1,175.00	1,100.00
5	1,000.00	890.00
6	783.00	750.00
7	699.00	640.00
8	636.00	560.00
9	588.00	500.00
10	548.00	440.00
11	516.00	395.00
12	489.00	365.00
13	480.00	362.00
14	477.00	358.00
15	475.00	355.00
16	472.00	353.00
17	470.00	350.00
18	467.00	348.00
19	465.00	345.00
20	462.00	340.00
21	459.00	338.00
22	456.00	336.00
23	454.00	333.00
24	451.00	331.00

* Interface sold separately.

Service availability limited. Refer to # footnote on Page 7-149.

© 2022 Frontier Communications Parent, Inc. All rights reserved

7. Special Access Service (Cont'd)

7.5 Rates and Charges (Cont'd)

7.5.21 Dedicated SONET Entrance Facilities (DSEF)#

(A) Per **Price Band 5**

STS1/51.84Mbps Termination*,	Monthly Rate 3 Year Term	Monthly Rate 5 Year Term
25	449.00	329.00
26	446.00	327.00
27	444.00	325.00
28	441.00	323.00
29	438.00	321.00
30	435.00	319.00
31	433.00	317.00
32	430.00	315.00
33	428.00	312.00
34	425.00	310.00
35	423.00	308.00
36	420.00	306.00
37	407.00	304.00
38	404.00	302.00
39	402.00	298.00
40	399.00	294.00
41	396.00	288.00
42	393.00	283.00
43	391.00	278.00
44	388.00	273.00
45	386.00	267.00
46	383.00	262.00
47	381.00	257.00
48 and up	378.00	252.00

* Interface sold separately.

Service availability limited. Refer to # footnote on Page 7-149.

© 2022 Frontier Communications Parent, Inc. All rights reserved

7. Special Access Service (Cont'd)

7.5 Rates and Charges (Cont'd)

7.5.21 Dedicated SONET Entrance Facilities (DSEF)#

(A) Per **Price Band 6**

STS1/51.84Mbps Termination*,	Monthly Rate 3 Year Term	Monthly Rate 5 Year Term
1	2,150.00	1,800.00
2	2,100.00	1,600.00
3	1,700.00	1,500.00
4	1,175.00	1,100.00
5	1,000.00	890.00
6	783.00	750.00
7	699.00	640.00
8	636.00	560.00
9	588.00	500.00
10	548.00	440.00
11	516.00	395.00
12	489.00	365.00
13	480.00	362.00
14	477.00	358.00
15	475.00	355.00
16	472.00	353.00
17	470.00	350.00
18	467.00	348.00
19	465.00	345.00
20	462.00	340.00
21	459.00	338.00
22	456.00	336.00
23	454.00	333.00
24	451.00	331.00

* Interface sold separately.

Service availability limited. Refer to # footnote on Page 7-149.

© 2022 Frontier Communications Parent, Inc. All rights reserved

7. Special Access Service (Cont'd)

7.5 Rates and Charges (Cont'd)

7.5.21 Dedicated SONET Entrance Facilities (DSEF)#

(A) Per **Price Band 6**

STS1/51.84Mbps Termination*,	Monthly Rate 3 Year Term	Monthly Rate 5 Year Term
25	449.00	329.00
26	446.00	327.00
27	444.00	325.00
28	441.00	323.00
29	438.00	321.00
30	435.00	319.00
31	433.00	317.00
32	430.00	315.00
33	428.00	312.00
34	425.00	310.00
35	423.00	308.00
36	420.00	306.00
37	407.00	304.00
38	404.00	302.00
39	402.00	298.00
40	399.00	294.00
41	396.00	288.00
42	393.00	283.00
43	391.00	278.00
44	388.00	273.00
45	386.00	267.00
46	383.00	262.00
47	381.00	257.00
48 and up	378.00	252.00

* Interface sold separately.

Service availability limited. Refer to # footnote on Page 7-149.

© 2022 Frontier Communications Parent, Inc. All rights reserved

7. Special Access Service (Cont'd)

7.5 Rates and Charges (Cont'd)

7.5.21 Dedicated SONET Entrance Facilities (DSEF)# (Cont'd)

(A1) Per **Price Cap** STS1/51.84Mbps

Termination w/ a Fractional OC3 Interface	Monthly Rate 3 Year Term	Monthly Rate 5 Year Term
1	$2,310.00	1,905.00
2	2,260.00	1,705.00
3	1,860.00	1,605.00
4	1,335.00	1,205.00
5	1,175.00	855.00
6	971.00	690.00
7	891.00	633.00
8	831.00	590.00
9	785.00	557.00
10	747.00	530.00
11	717.00	508.00
12	691.00	490.00
13	683.00	488.00
14	680.00	486.00
15	678.00	484.00
16	675.00	482.00
17	673.00	480.00
18	670.00	478.00
19	668.00	476.00
20	665.00	474.00
21	663.00	472.00
22	660.00	470.00
23	658.00	468.00
24	655.00	466.00

Service availability limited. Refer to # footnote on Page 7-149.

© 2022 Frontier Communications Parent, Inc. All rights reserved

7. Special Access Service (Cont'd)

7.5 Rates and Charges (Cont'd)

7.5.21 Dedicated SONET Entrance Facilities (DSEF)# (Cont'd)

(A1) Per **Price Cap** STS1/51.84Mbps

Termination w/ a Fractional OC3 Interface	Monthly Rate 3 Year Term	Monthly Rate 5 Year Term
25	653.00	464.00
26	650.00	462.00
27	648.00	460.00
28	645.00	458.00
29	643.00	456.00
30	640.00	454.00
31	638.00	452.00
32	635.00	450.00
33	633.00	448.00
34	630.00	446.00
35	628.00	444.00
36	625.00	442.00
37	613.00	440.00
38	610.00	438.00
39	608.00	434.00
40	605.00	430.00
41	603.00	425.00
42	600.00	420.00
43	598.00	415.00
44	595.00	410.00
45	593.00	405.00
46	590.00	400.00
47	588.00	395.00
48 and up	585.00	390.00

Service availability limited. Refer to # footnote on Page 7-149.

© 2022 Frontier Communications Parent, Inc. All rights reserved

7. Special Access Service (Cont'd)

7.5 Rates and Charges (Cont'd)

7.5.21 Dedicated SONET Entrance Facilities (DSEF)# (Cont'd)

(A1) Per **Price Band 4** STS1/51.84Mbps

Termination w/ a Fractional OC3 Interface	Monthly Rate 3 Year Term	Monthly Rate 5 Year Term
1	$2,310.00	1,905.00
2	2,260.00	1,705.00
3	1,860.00	1,605.00
4	1,335.00	1,205.00
5	1,175.00	855.00
6	971.00	690.00
7	891.00	633.00
8	831.00	590.00
9	785.00	557.00
10	747.00	530.00
11	717.00	508.00
12	691.00	490.00
13	683.00	488.00
14	680.00	486.00
15	678.00	484.00
16	675.00	482.00
17	673.00	480.00
18	670.00	478.00
19	668.00	476.00
20	665.00	474.00
21	663.00	472.00
22	660.00	470.00
23	658.00	468.00
24	655.00	466.00

Service availability limited. Refer to # footnote on Page 7-149.

© 2022 Frontier Communications Parent, Inc. All rights reserved

7. Special Access Service (Cont'd)

7.5 Rates and Charges (Cont'd)

7.5.21 Dedicated SONET Entrance Facilities (DSEF)# (Cont'd)

(A1) Per **Price Band 4** STS1/51.84Mbps

Termination w/ a Fractional OC3 Interface	Monthly Rate 3 Year Term	Monthly Rate 5 Year Term
25	653.00	464.00
26	650.00	462.00
27	648.00	460.00
28	645.00	458.00
29	643.00	456.00
30	640.00	454.00
31	638.00	452.00
32	635.00	450.00
33	633.00	448.00
34	630.00	446.00
35	628.00	444.00
36	625.00	442.00
37	613.00	440.00
38	610.00	438.00
39	608.00	434.00
40	605.00	430.00
41	603.00	425.00
42	600.00	420.00
43	598.00	415.00
44	595.00	410.00
45	593.00	405.00
46	590.00	400.00
47	588.00	395.00
48 and up	585.00	390.00

Service availability limited. Refer to # footnote on Page 7-149.

© 2022 Frontier Communications Parent, Inc. All rights reserved

7. Special Access Service (Cont'd)

7.5 Rates and Charges (Cont'd)

7.5.21 Dedicated SONET Entrance Facilities (DSEF)# (Cont'd)

(A1) Per **Price Band 5** STS1/51.84Mbps

Termination w/ a Fractional OC3 Interface	Monthly Rate 3 Year Term	Monthly Rate 5 Year Term
1	$2,310.00	1,905.00
2	2,260.00	1,705.00
3	1,860.00	1,605.00
4	1,335.00	1,205.00
5	1,175.00	855.00
6	971.00	690.00
7	891.00	633.00
8	831.00	590.00
9	785.00	557.00
10	747.00	530.00
11	717.00	508.00
12	691.00	490.00
13	683.00	488.00
14	680.00	486.00
15	678.00	484.00
16	675.00	482.00
17	673.00	480.00
18	670.00	478.00
19	668.00	476.00
20	665.00	474.00
21	663.00	472.00
22	660.00	470.00
23	658.00	468.00
24	655.00	466.00

Service availability limited. Refer to # footnote on Page 7-149.

© 2022 Frontier Communications Parent, Inc. All rights reserved

7. Special Access Service (Cont'd)

7.5 Rates and Charges (Cont'd)

7.5.21 Dedicated SONET Entrance Facilities (DSEF)# (Cont'd)

(A1) Per **Price Band 5** STS1/51.84Mbps

Termination w/ a Fractional OC3 Interface	Monthly Rate 3 Year Term	Monthly Rate 5 Year Term
25	653.00	464.00
26	650.00	462.00
27	648.00	460.00
28	645.00	458.00
29	643.00	456.00
30	640.00	454.00
31	638.00	452.00
32	635.00	450.00
33	633.00	448.00
34	630.00	446.00
35	628.00	444.00
36	625.00	442.00
37	613.00	440.00
38	610.00	438.00
39	608.00	434.00
40	605.00	430.00
41	603.00	425.00
42	600.00	420.00
43	598.00	415.00
44	595.00	410.00
45	593.00	405.00
46	590.00	400.00
47	588.00	395.00
48 and up	585.00	390.00

Service availability limited. Refer to # footnote on Page 7-149.

© 2022 Frontier Communications Parent, Inc. All rights reserved

7. Special Access Service (Cont'd)

7.5 Rates and Charges (Cont'd)

7.5.21 Dedicated SONET Entrance Facilities (DSEF)# (Cont'd)

(A1) Per **Price Band 6** STS1/51.84Mbps

Termination w/ a Fractional OC3 Interface	Monthly Rate 3 Year Term	Monthly Rate 5 Year Term
1	$2,310.00	1,905.00
2	2,260.00	1,705.00
3	1,860.00	1,605.00
4	1,335.00	1,205.00
5	1,175.00	855.00
6	971.00	690.00
7	891.00	633.00
8	831.00	590.00
9	785.00	557.00
10	747.00	530.00
11	717.00	508.00
12	691.00	490.00
13	683.00	488.00
14	680.00	486.00
15	678.00	484.00
16	675.00	482.00
17	673.00	480.00
18	670.00	478.00
19	668.00	476.00
20	665.00	474.00
21	663.00	472.00
22	660.00	470.00
23	658.00	468.00
24	655.00	466.00

Service availability limited. Refer to # footnote on Page 7-149.

© 2022 Frontier Communications Parent, Inc. All rights reserved

7. Special Access Service (Cont'd)

7.5 Rates and Charges (Cont'd)

7.5.21 Dedicated SONET Entrance Facilities (DSEF)# (Cont'd)

(A1) Per **Price Band 6** STS1/51.84Mbps

Termination w/ a Fractional OC3 Interface	Monthly Rate 3 Year Term	Monthly Rate 5 Year Term
25	653.00	464.00
26	650.00	462.00
27	648.00	460.00
28	645.00	458.00
29	643.00	456.00
30	640.00	454.00
31	638.00	452.00
32	635.00	450.00
33	633.00	448.00
34	630.00	446.00
35	628.00	444.00
36	625.00	442.00
37	613.00	440.00
38	610.00	438.00
39	608.00	434.00
40	605.00	430.00
41	603.00	425.00
42	600.00	420.00
43	598.00	415.00
44	595.00	410.00
45	593.00	405.00
46	590.00	400.00
47	588.00	395.00
48 and up	585.00	390.00

Service availability limited. Refer to # footnote on Page 7-149.

© 2022 Frontier Communications Parent, Inc. All rights reserved

7. Special Access Service (Cont'd)

7.5 Rates and Charges (Cont'd)

7.5.21 Dedicated SONET Entrance Facilities (DSEF)# (Cont'd)

(A2) Per **Price Cap** STS1/51.84 Mbps Termination w/ a Fractional OC12 Interface	Monthly Rate 3 Year Term	Monthly Rate 5 Year Term
1	$2,310.00	$1,905.00
2	2,260.00	1,705.00
3	1,860.00	1,605.00
4	1,335.00	1,205.00
5	1,175.00	970.00
6	896.00	855.00
7	816.00	745.00
8	756.00	665.00
9	710.00	605.00
10	672.00	545.00
11	642.00	500.00
12	616.00	470.00
13	608.00	465.00
14	605.00	455.00
15	603.00	450.00
16	600.00	445.00
17	598.00	440.00
18	595.00	435.00
19	593.00	430.00
20	590.00	424.00
21	588.00	422.00
22	585.00	420.00
23	583.00	418.00
24	580.00	416.00

Service availability limited. Refer to # footnote on Page 7-149.

© 2022 Frontier Communications Parent, Inc. All rights reserved

7. Special Access Service (Cont'd)

7.5 Rates and Charges (Cont'd)

7.5.21 Dedicated SONET Entrance Facilities (DSEF)# (Cont'd)

(A2) Per **Price Cap** STS1/51.84 Mbps Termination w/ a Fractional OC12 Interface	Monthly Rate 3 Year Term	Monthly Rate 5 Year Term
25	578.00	414.00
26	575.00	412.00
27	573.00	410.00
28	570.00	408.00
29	568.00	406.00
30	565.00	404.00
31	563.00	402.00
32	560.00	400.00
33	558.00	398.00
34	555.00	396.00
35	553.00	394.00
36	550.00	392.00
37	538.00	390.00
38	535.00	388.00
39	533.00	384.00
40	530.00	380.00
41	528.00	375.00
42	525.00	370.00
43	523.00	365.00
44	520.00	360.00
45	518.00	355.00
46	515.00	350.00
47	513.00	345.00
48 and up	510.00	340.00

Service availability limited. Refer to # footnote on Page 7-149.

© 2022 Frontier Communications Parent, Inc. All rights reserved

7. Special Access Service (Cont'd)

7.5 Rates and Charges (Cont'd)

7.5.21 Dedicated SONET Entrance Facilities (DSEF)# (Cont'd)

(A2) Per **Price Band 4** STS1/51.84 Mbps Termination w/ a Fractional OC12 Interface	Monthly Rate 3 Year Term	Monthly Rate 5 Year Term
1	$2,310.00	$1,905.00
2	2,260.00	1,705.00
3	1,860.00	1,605.00
4	1,335.00	1,205.00
5	1,175.00	970.00
6	896.00	855.00
7	816.00	745.00
8	756.00	665.00
9	710.00	605.00
10	672.00	545.00
11	642.00	500.00
12	616.00	470.00
13	608.00	465.00
14	605.00	455.00
15	603.00	450.00
16	600.00	445.00
17	598.00	440.00
18	595.00	435.00
19	593.00	430.00
20	590.00	424.00
21	588.00	422.00
22	585.00	420.00
23	583.00	418.00
24	580.00	416.00

Service availability limited. Refer to # footnote on Page 7-149.

© 2022 Frontier Communications Parent, Inc. All rights reserved

7. Special Access Service (Cont'd)

7.5 Rates and Charges (Cont'd)

7.5.21 Dedicated SONET Entrance Facilities (DSEF)# (Cont'd)

(A2) Per **Price Band 4** STS1/51.84 Mbps Termination w/ a Fractional OC12 Interface	Monthly Rate 3 Year Term	Monthly Rate 5 Year Term
25	578.00	414.00
26	575.00	412.00
27	573.00	410.00
28	570.00	408.00
29	568.00	406.00
30	565.00	404.00
31	563.00	402.00
32	560.00	400.00
33	558.00	398.00
34	555.00	396.00
35	553.00	394.00
36	550.00	392.00
37	538.00	390.00
38	535.00	388.00
39	533.00	384.00
40	530.00	380.00
41	528.00	375.00
42	525.00	370.00
43	523.00	365.00
44	520.00	360.00
45	518.00	355.00
46	515.00	350.00
47	513.00	345.00
48 and up	510.00	340.00

Service availability limited. Refer to # footnote on Page 7-149.

© 2022 Frontier Communications Parent, Inc. All rights reserved

7. Special Access Service (Cont'd)

7.5 Rates and Charges (Cont'd)

7.5.21 Dedicated SONET Entrance Facilities (DSEF)# (Cont'd)

(A2) Per **Price Band 5** STS1/51.84 Mbps Termination w/ a Fractional OC12 Interface	Monthly Rate 3 Year Term	Monthly Rate 5 Year Term
1	$2,310.00	$1,905.00
2	2,260.00	1,705.00
3	1,860.00	1,605.00
4	1,335.00	1,205.00
5	1,175.00	970.00
6	896.00	855.00
7	816.00	745.00
8	756.00	665.00
9	710.00	605.00
10	672.00	545.00
11	642.00	500.00
12	616.00	470.00
13	608.00	465.00
14	605.00	455.00
15	603.00	450.00
16	600.00	445.00
17	598.00	440.00
18	595.00	435.00
19	593.00	430.00
20	590.00	424.00
21	588.00	422.00
22	585.00	420.00
23	583.00	418.00
24	580.00	416.00

Service availability limited. Refer to # footnote on Page 7-149.

© 2022 Frontier Communications Parent, Inc. All rights reserved

7. Special Access Service (Cont'd)

7.5 Rates and Charges (Cont'd)

7.5.21 Dedicated SONET Entrance Facilities (DSEF)# (Cont'd)

(A2) Per **Price Band 5** STS1/51.84 Mbps Termination w/ a Fractional OC12 Interface	Monthly Rate 3 Year Term	Monthly Rate 5 Year Term
25	578.00	414.00
26	575.00	412.00
27	573.00	410.00
28	570.00	408.00
29	568.00	406.00
30	565.00	404.00
31	563.00	402.00
32	560.00	400.00
33	558.00	398.00
34	555.00	396.00
35	553.00	394.00
36	550.00	392.00
37	538.00	390.00
38	535.00	388.00
39	533.00	384.00
40	530.00	380.00
41	528.00	375.00
42	525.00	370.00
43	523.00	365.00
44	520.00	360.00
45	518.00	355.00
46	515.00	350.00
47	513.00	345.00
48 and up	510.00	340.00

Service availability limited. Refer to # footnote on Page 7-149.

© 2022 Frontier Communications Parent, Inc. All rights reserved

7. Special Access Service (Cont'd)

7.5 Rates and Charges (Cont'd)

7.5.21 Dedicated SONET Entrance Facilities (DSEF)# (Cont'd)

(A2) Per **Price Band 6** STS1/51.84 Mbps Termination w/ a Fractional OC12 Interface	Monthly Rate 3 Year Term	Monthly Rate 5 Year Term
1	$2,310.00	$1,905.00
2	2,260.00	1,705.00
3	1,860.00	1,605.00
4	1,335.00	1,205.00
5	1,175.00	970.00
6	896.00	855.00
7	816.00	745.00
8	756.00	665.00
9	710.00	605.00
10	672.00	545.00
11	642.00	500.00
12	616.00	470.00
13	608.00	465.00
14	605.00	455.00
15	603.00	450.00
16	600.00	445.00
17	598.00	440.00
18	595.00	435.00
19	593.00	430.00
20	590.00	424.00
21	588.00	422.00
22	585.00	420.00
23	583.00	418.00
24	580.00	416.00

Service availability limited. Refer to # footnote on Page 7-149.

© 2022 Frontier Communications Parent, Inc. All rights reserved

7. Special Access Service (Cont'd)

7.5 Rates and Charges (Cont'd)

7.5.21 Dedicated SONET Entrance Facilities (DSEF)# (Cont'd)

(A2) Per **Price Band 6** STS1/51.84 Mbps Termination w/ a Fractional OC12 Interface	Monthly Rate 3 Year Term	Monthly Rate 5 Year Term
25	578.00	414.00
26	575.00	412.00
27	573.00	410.00
28	570.00	408.00
29	568.00	406.00
30	565.00	404.00
31	563.00	402.00
32	560.00	400.00
33	558.00	398.00
34	555.00	396.00
35	553.00	394.00
36	550.00	392.00
37	538.00	390.00
38	535.00	388.00
39	533.00	384.00
40	530.00	380.00
41	528.00	375.00
42	525.00	370.00
43	523.00	365.00
44	520.00	360.00
45	518.00	355.00
46	515.00	350.00
47	513.00	345.00
48 and up	510.00	340.00

Service availability limited. Refer to # footnote on Page 7-149.

© 2022 Frontier Communications Parent, Inc. All rights reserved

7. Special Access Service (Cont'd)

7.5 Rates and Charges (Cont'd)

7.5.21 Dedicated SONET Entrance Facilities (DSEF)# (Cont'd)

(A3) Per **N-MSA** STS3/ 155.52Mbps Termination W/ a Fractional OC3 Interface

	Monthly Rate 3 Year Term	Monthly Rate 5 Year Term
1	NA	NA
2	NA	NA
3	5,580.00	4,815.00
4	4,005.00	3,615.00
5	3,525.00	2,565.00
6	2,913.00	2,070.00
7	2,673.00	1,899.00
8	2,493.00	1,770.00
9	2,355.00	1,671.00
10	2,241.00	1,590.00
11	2,151.00	1,524.00
12	2,073.00	1,470.00
13	2,049.00	1,464.00
14	2,040.00	1,458.00
15	2,034.00	1,452.00
16	2,025.00	1,446.00
17	2,019.00	1,440.00
18	2,010.00	1,434.00
19	2,004.00	1,428.00
20	1,995.00	1,422.00
21	1,989.00	1,416.00
22	1,980.00	1,410.00
23	1,974.00	1,404.00
24	1,965.00	1,398.00

Service availability limited. Refer to # footnote on Page 7-149.

© 2022 Frontier Communications Parent, Inc. All rights reserved

7. Special Access Service (Cont'd)

7.5 Rates and Charges (Cont'd)

7.5.21 Dedicated SONET Entrance Facilities (DSEF)# (Cont'd)

(A3) Per **N-MSA** STS3/ 155.52Mbps Termination W/ a Fractional OC3 Interface

	Monthly Rate 3 Year Term	Monthly Rate 5 Year Term
25	1,959.00	1,392.00
26	1,950.00	1,386.00
27	1,944.00	1,380.00
28	1,935.00	1,374.00
29	1,929.00	1,368.00
30	1,920.00	1,362.00
31	1,914.00	1,356.00
32	1,905.00	1,350.00
33	1,899.00	1,344.00
34	1,890.00	1,338.00
35	1,884.00	1,332.00
36	1,875.00	1,326.00
37	1,839.00	1,320.00
38	1,830.00	1,314.00
39	1,824.00	1,302.00
40	1,815.00	1,290.00
41	1,809.00	1,275.00
42	1,800.00	1,260.00
43	1,794.00	1,245.00
44	1,785.00	1,230.00
45	1,779.00	1,215.00
46	1,770.00	1,200.00
47	1,764.00	1,185.00
48 and up	1,755.00	1,170.00

Service availability limited. Refer to # footnote on Page 7-149.

© 2022 Frontier Communications Parent, Inc. All rights reserved

7. Special Access Service (Cont'd)

7.5 Rates and Charges (Cont'd)

7.5.21 Dedicated SONET Entrance Facilities (DSEF)# (Cont'd)

(A3) Per **Price Band 4** STS3/ 155.52Mbps Termination W/ a Fractional OC3 Interface

	Monthly Rate 3 Year Term	Monthly Rate 5 Year Term
1	NA	NA
2	NA	NA
3	5,580.00	4,815.00
4	4,005.00	3,615.00
5	3,525.00	2,565.00
6	2,913.00	2,070.00
7	2,673.00	1,899.00
8	2,493.00	1,770.00
9	2,355.00	1,671.00
10	2,241.00	1,590.00
11	2,151.00	1,524.00
12	2,073.00	1,470.00
13	2,049.00	1,464.00
14	2,040.00	1,458.00
15	2,034.00	1,452.00
16	2,025.00	1,446.00
17	2,019.00	1,440.00
18	2,010.00	1,434.00
19	2,004.00	1,428.00
20	1,995.00	1,422.00
21	1,989.00	1,416.00
22	1,980.00	1,410.00
23	1,974.00	1,404.00
24	1,965.00	1,398.00

Service availability limited. Refer to # footnote on Page 7-149.

© 2022 Frontier Communications Parent, Inc. All rights reserved

7. Special Access Service (Cont'd)

7.5 Rates and Charges (Cont'd)

7.5.21 Dedicated SONET Entrance Facilities (DSEF)# (Cont'd)

(A3) Per **Price Band 4** STS3/ 155.52Mbps Termination W/ a Fractional OC3 Interface

	Monthly Rate 3 Year Term	Monthly Rate 5 Year Term
25	1,959.00	1,392.00
26	1,950.00	1,386.00
27	1,944.00	1,380.00
28	1,935.00	1,374.00
29	1,929.00	1,368.00
30	1,920.00	1,362.00
31	1,914.00	1,356.00
32	1,905.00	1,350.00
33	1,899.00	1,344.00
34	1,890.00	1,338.00
35	1,884.00	1,332.00
36	1,875.00	1,326.00
37	1,839.00	1,320.00
38	1,830.00	1,314.00
39	1,824.00	1,302.00
40	1,815.00	1,290.00
41	1,809.00	1,275.00
42	1,800.00	1,260.00
43	1,794.00	1,245.00
44	1,785.00	1,230.00
45	1,779.00	1,215.00
46	1,770.00	1,200.00
47	1,764.00	1,185.00
48 and up	1,755.00	1,170.00

Service availability limited. Refer to # footnote on Page 7-149.

© 2022 Frontier Communications Parent, Inc. All rights reserved

7. Special Access Service (Cont'd)

7.5 Rates and Charges (Cont'd)

7.5.21 Dedicated SONET Entrance Facilities (DSEF)# (Cont'd)

(A3) Per **Price Band 5** STS3/ 155.52Mbps Termination W/ a Fractional OC3 Interface

	Monthly Rate 3 Year Term	Monthly Rate 5 Year Term
1	NA	NA
2	NA	NA
3	5,580.00	4,815.00
4	4,005.00	3,615.00
5	3,525.00	2,565.00
6	2,913.00	2,070.00
7	2,673.00	1,899.00
8	2,493.00	1,770.00
9	2,355.00	1,671.00
10	2,241.00	1,590.00
11	2,151.00	1,524.00
12	2,073.00	1,470.00
13	2,049.00	1,464.00
14	2,040.00	1,458.00
15	2,034.00	1,452.00
16	2,025.00	1,446.00
17	2,019.00	1,440.00
18	2,010.00	1,434.00
19	2,004.00	1,428.00
20	1,995.00	1,422.00
21	1,989.00	1,416.00
22	1,980.00	1,410.00
23	1,974.00	1,404.00
24	1,965.00	1,398.00

Service availability limited. Refer to # footnote on Page 7-149.

© 2022 Frontier Communications Parent, Inc. All rights reserved

7. Special Access Service (Cont'd)

7.5 Rates and Charges (Cont'd)

7.5.21 Dedicated SONET Entrance Facilities (DSEF)# (Cont'd)

(A3) Per **Price Band 5** STS3/ 155.52Mbps Termination W/ a Fractional OC3 Interface

	Monthly Rate 3 Year Term	Monthly Rate 5 Year Term
25	1,959.00	1,392.00
26	1,950.00	1,386.00
27	1,944.00	1,380.00
28	1,935.00	1,374.00
29	1,929.00	1,368.00
30	1,920.00	1,362.00
31	1,914.00	1,356.00
32	1,905.00	1,350.00
33	1,899.00	1,344.00
34	1,890.00	1,338.00
35	1,884.00	1,332.00
36	1,875.00	1,326.00
37	1,839.00	1,320.00
38	1,830.00	1,314.00
39	1,824.00	1,302.00
40	1,815.00	1,290.00
41	1,809.00	1,275.00
42	1,800.00	1,260.00
43	1,794.00	1,245.00
44	1,785.00	1,230.00
45	1,779.00	1,215.00
46	1,770.00	1,200.00
47	1,764.00	1,185.00
48 and up	1,755.00	1,170.00

Service availability limited. Refer to # footnote on Page 7-149.

© 2022 Frontier Communications Parent, Inc. All rights reserved

7. Special Access Service (Cont'd)

7.5 Rates and Charges (Cont'd)

7.5.21 Dedicated SONET Entrance Facilities (DSEF)# (Cont'd)

(A3) Per **Price Band 6** STS3/ 155.52Mbps Termination W/ a Fractional OC3 Interface

	Monthly Rate 3 Year Term	Monthly Rate 5 Year Term
1	NA	NA
2	NA	NA
3	5,580.00	4,815.00
4	4,005.00	3,615.00
5	3,525.00	2,565.00
6	2,913.00	2,070.00
7	2,673.00	1,899.00
8	2,493.00	1,770.00
9	2,355.00	1,671.00
10	2,241.00	1,590.00
11	2,151.00	1,524.00
12	2,073.00	1,470.00
13	2,049.00	1,464.00
14	2,040.00	1,458.00
15	2,034.00	1,452.00
16	2,025.00	1,446.00
17	2,019.00	1,440.00
18	2,010.00	1,434.00
19	2,004.00	1,428.00
20	1,995.00	1,422.00
21	1,989.00	1,416.00
22	1,980.00	1,410.00
23	1,974.00	1,404.00
24	1,965.00	1,398.00

Service availability limited. Refer to # footnote on Page 7-149.

© 2022 Frontier Communications Parent, Inc. All rights reserved

7. Special Access Service (Cont'd)

7.5 Rates and Charges (Cont'd)

7.5.21 Dedicated SONET Entrance Facilities (DSEF)# (Cont'd)

(A3) Per **Price Band 6** STS3/ 155.52Mbps Termination W/ a Fractional OC3 Interface

	Monthly Rate 3 Year Term	Monthly Rate 5 Year Term
25	1,959.00	1,392.00
26	1,950.00	1,386.00
27	1,944.00	1,380.00
28	1,935.00	1,374.00
29	1,929.00	1,368.00
30	1,920.00	1,362.00
31	1,914.00	1,356.00
32	1,905.00	1,350.00
33	1,899.00	1,344.00
34	1,890.00	1,338.00
35	1,884.00	1,332.00
36	1,875.00	1,326.00
37	1,839.00	1,320.00
38	1,830.00	1,314.00
39	1,824.00	1,302.00
40	1,815.00	1,290.00
41	1,809.00	1,275.00
42	1,800.00	1,260.00
43	1,794.00	1,245.00
44	1,785.00	1,230.00
45	1,779.00	1,215.00
46	1,770.00	1,200.00
47	1,764.00	1,185.00
48 and up	1,755.00	1,170.00

Service availability limited. Refer to # footnote on Page 7-149.

© 2022 Frontier Communications Parent, Inc. All rights reserved

7. Special Access Service (Cont'd)

7.5 Rates and Charges (Cont'd)

7.5.21 Dedicated SONET Entrance Facilities (DSEF)# (Cont'd)

(A4) Per **N-MSA** STS3/

155.52 Mbps Termination W/ a Fractional OC12 Interface	Monthly Rate 3 Year Term	Monthly Rate 5 Year Term
1	NA	NA
2	NA	NA
3	5,580.00	4,815.00
4	4,005.00	3,615.00
5	3,525.00	2,910.00
6	2,688.00	2,565.00
7	2,448.00	2,235.00
8	2,268.00	1,995.00
9	2,130.00	1,815.00
10	2,016.00	1,635.00
11	1,926.00	1,500.00
12	1,848.00	1,410.00
13	1,824.00	1,395.00
14	1,815.00	1,365.00
15	1,809.00	1,350.00
16	1,800.00	1,335.00
17	1,794.00	1,320.00
18	1,785.00	1,305.00
19	1,779.00	1,290.00
20	1,770.00	1,272.00
21	1,764.00	1,266.00
22	1,755.00	1,260.00
23	1,749.00	1,254.00
24	1,740.00	1,248.00

Service availability limited. Refer to # footnote on Page 7-149.

© 2022 Frontier Communications Parent, Inc. All rights reserved

7. Special Access Service (Cont'd)

7.5 Rates and Charges (Cont'd)

7.5.21 Dedicated SONET Entrance Facilities (DSEF)# (Cont'd)

(A4) Per **N-MSA** STS3/ 155.52 Mbps Termination W/ a Fractional OC12 Interface

	Monthly Rate 3 Year Term	Monthly Rate 5 Year Term
25	1,734.00	1,242.00
26	1,725.00	1,236.00
27	1,719.00	1,230.00
28	1,710.00	1,224.00
29	1,704.00	1,218.00
30	1,695.00	1,212.00
31	1,689.00	1,206.00
32	1,680.00	1,200.00
33	1,674.00	1,194.00
34	1,665.00	1,188.00
35	1,659.00	1,182.00
36	1,650.00	1,176.00
37	1,614.00	1,170.00
38	1,605.00	1,164.00
39	1,599.00	1,152.00
40	1,590.00	1,140.00
41	1,584.00	1,125.00
42	1,575.00	1,110.00
43	1,569.00	1,095.00
44	1,560.00	1,080.00
45	1,554.00	1,065.00
46	1,545.00	1,050.00
47	1,539.00	1,035.00
48 and up	1,530.00	1,020.00

Service availability limited. Refer to # footnote on Page 7-149.

© 2022 Frontier Communications Parent, Inc. All rights reserved

7. Special Access Service (Cont'd)

7.5 Rates and Charges (Cont'd)

7.5.21 Dedicated SONET Entrance Facilities (DSEF)# (Cont'd)

(A4) Per **Price Band 4** STS3/ 155.52 Mbps Termination W/ a Fractional OC12 Interface

	Monthly Rate 3 Year Term	Monthly Rate 5 Year Term
1	NA	NA
2	NA	NA
3	5,580.00	4,815.00
4	4,005.00	3,615.00
5	3,525.00	2,910.00
6	2,688.00	2,565.00
7	2,448.00	2,235.00
8	2,268.00	1,995.00
9	2,130.00	1,815.00
10	2,016.00	1,635.00
11	1,926.00	1,500.00
12	1,848.00	1,410.00
13	1,824.00	1,395.00
14	1,815.00	1,365.00
15	1,809.00	1,350.00
16	1,800.00	1,335.00
17	1,794.00	1,320.00
18	1,785.00	1,305.00
19	1,779.00	1,290.00
20	1,770.00	1,272.00
21	1,764.00	1,266.00
22	1,755.00	1,260.00
23	1,749.00	1,254.00
24	1,740.00	1,248.00

Service availability limited. Refer to # footnote on Page 7-149.

© 2022 Frontier Communications Parent, Inc. All rights reserved

7. Special Access Service (Cont'd)

7.5 Rates and Charges (Cont'd)

7.5.21 Dedicated SONET Entrance Facilities (DSEF)# (Cont'd)

(A4) Per **Price Band 4** STS3/ 155.52 Mbps Termination W/ a Fractional OC12 Interface

	Monthly Rate 3 Year Term	Monthly Rate 5 Year Term
25	1,734.00	1,242.00
26	1,725.00	1,236.00
27	1,719.00	1,230.00
28	1,710.00	1,224.00
29	1,704.00	1,218.00
30	1,695.00	1,212.00
31	1,689.00	1,206.00
32	1,680.00	1,200.00
33	1,674.00	1,194.00
34	1,665.00	1,188.00
35	1,659.00	1,182.00
36	1,650.00	1,176.00
37	1,614.00	1,170.00
38	1,605.00	1,164.00
39	1,599.00	1,152.00
40	1,590.00	1,140.00
41	1,584.00	1,125.00
42	1,575.00	1,110.00
43	1,569.00	1,095.00
44	1,560.00	1,080.00
45	1,554.00	1,065.00
46	1,545.00	1,050.00
47	1,539.00	1,035.00
48 and up	1,530.00	1,020.00

Service availability limited. Refer to # footnote on Page 7-149.

© 2022 Frontier Communications Parent, Inc. All rights reserved

7. Special Access Service (Cont'd)

7.5 Rates and Charges (Cont'd)

7.5.21 Dedicated SONET Entrance Facilities (DSEF)# (Cont'd)

(A4) Per **Price Band 5** STS3/ 155.52 Mbps Termination W/ a Fractional OC12 Interface

	Monthly Rate 3 Year Term	Monthly Rate 5 Year Term
1	NA	NA
2	NA	NA
3	5,580.00	4,815.00
4	4,005.00	3,615.00
5	3,525.00	2,910.00
6	2,688.00	2,565.00
7	2,448.00	2,235.00
8	2,268.00	1,995.00
9	2,130.00	1,815.00
10	2,016.00	1,635.00
11	1,926.00	1,500.00
12	1,848.00	1,410.00
13	1,824.00	1,395.00
14	1,815.00	1,365.00
15	1,809.00	1,350.00
16	1,800.00	1,335.00
17	1,794.00	1,320.00
18	1,785.00	1,305.00
19	1,779.00	1,290.00
20	1,770.00	1,272.00
21	1,764.00	1,266.00
22	1,755.00	1,260.00
23	1,749.00	1,254.00
24	1,740.00	1,248.00

Service availability limited. Refer to # footnote on Page 7-149.

© 2022 Frontier Communications Parent, Inc. All rights reserved

7. Special Access Service (Cont'd)

7.5 Rates and Charges (Cont'd)

7.5.21 Dedicated SONET Entrance Facilities (DSEF)# (Cont'd)

(A4) Per **Price Band 5** STS3/ 155.52 Mbps Termination W/ a Fractional OC12 Interface

	Monthly Rate 3 Year Term	Monthly Rate 5 Year Term
25	1,734.00	1,242.00
26	1,725.00	1,236.00
27	1,719.00	1,230.00
28	1,710.00	1,224.00
29	1,704.00	1,218.00
30	1,695.00	1,212.00
31	1,689.00	1,206.00
32	1,680.00	1,200.00
33	1,674.00	1,194.00
34	1,665.00	1,188.00
35	1,659.00	1,182.00
36	1,650.00	1,176.00
37	1,614.00	1,170.00
38	1,605.00	1,164.00
39	1,599.00	1,152.00
40	1,590.00	1,140.00
41	1,584.00	1,125.00
42	1,575.00	1,110.00
43	1,569.00	1,095.00
44	1,560.00	1,080.00
45	1,554.00	1,065.00
46	1,545.00	1,050.00
47	1,539.00	1,035.00
48 and up	1,530.00	1,020.00

Service availability limited. Refer to # footnote on Page 7-149.

© 2022 Frontier Communications Parent, Inc. All rights reserved

7. Special Access Service (Cont'd)

7.5 Rates and Charges (Cont'd)

7.5.21 Dedicated SONET Entrance Facilities (DSEF)# (Cont'd)

(A4) Per **Price Band 6** STS3/ 155.52 Mbps Termination W/ a Fractional OC12 Interface

	Monthly Rate 3 Year Term	Monthly Rate 5 Year Term
1	NA	NA
2	NA	NA
3	5,580.00	4,815.00
4	4,005.00	3,615.00
5	3,525.00	2,910.00
6	2,688.00	2,565.00
7	2,448.00	2,235.00
8	2,268.00	1,995.00
9	2,130.00	1,815.00
10	2,016.00	1,635.00
11	1,926.00	1,500.00
12	1,848.00	1,410.00
13	1,824.00	1,395.00
14	1,815.00	1,365.00
15	1,809.00	1,350.00
16	1,800.00	1,335.00
17	1,794.00	1,320.00
18	1,785.00	1,305.00
19	1,779.00	1,290.00
20	1,770.00	1,272.00
21	1,764.00	1,266.00
22	1,755.00	1,260.00
23	1,749.00	1,254.00
24	1,740.00	1,248.00

Service availability limited. Refer to # footnote on Page 7-149.

© 2022 Frontier Communications Parent, Inc. All rights reserved

7. Special Access Service (Cont'd)

7.5 Rates and Charges (Cont'd)

7.5.21 Dedicated SONET Entrance Facilities (DSEF)# (Cont'd)

(A4) Per **Price Band 6** STS3/ 155.52 Mbps Termination W/ a Fractional OC12 Interface

	Monthly Rate 3 Year Term	Monthly Rate 5 Year Term
25	1,734.00	1,242.00
26	1,725.00	1,236.00
27	1,719.00	1,230.00
28	1,710.00	1,224.00
29	1,704.00	1,218.00
30	1,695.00	1,212.00
31	1,689.00	1,206.00
32	1,680.00	1,200.00
33	1,674.00	1,194.00
34	1,665.00	1,188.00
35	1,659.00	1,182.00
36	1,650.00	1,176.00
37	1,614.00	1,170.00
38	1,605.00	1,164.00
39	1,599.00	1,152.00
40	1,590.00	1,140.00
41	1,584.00	1,125.00
42	1,575.00	1,110.00
43	1,569.00	1,095.00
44	1,560.00	1,080.00
45	1,554.00	1,065.00
46	1,545.00	1,050.00
47	1,539.00	1,035.00
48 and up	1,530.00	1,020.00

Service availability limited. Refer to # footnote on Page 7-149.

© 2022 Frontier Communications Parent, Inc. All rights reserved

7. Special Access Service (Cont'd)

7.5 Rates and Charges (Cont'd)

7.5.21 Dedicated SONET Entrance Facilities (DSEF)# (Cont'd)

(A5) Per **N-MSA** STS12/ 662.08Mbps Termination W/ a Fractional OC12 Interface

	Monthly Rate 3 Year Term	Monthly Rate 5 Year Term
1 to 11	NA	NA
12	7,392.00	5,640.00
13	7,296.00	5,580.00
14	7,260.00	5,460.00
15	7,236.00	5,400.00
16	7,200.00	5,340.00
17	7,176.00	5,280.00
18	7,140.00	5,220.00
19	7,116.00	5,160.00
20	7,080.00	5,088.00
21	7,056.00	5,064.00
22	7,020.00	5,040.00
23	6,996.00	5,016.00
24	6,960.00	4,992.00
25	6,936.00	4,968.00
26	6,900.00	4,944.00
27	6,876.00	4,920.00
28	6,840.00	4,896.00
29	6,816.00	4,872.00
30	6,780.00	4,848.00
31	6,756.00	4,824.00
32	6,720.00	4,800.00
33	6,696.00	4,776.00
34	6,660.00	4,752.00
35	6,636.00	4,728.00
36	6,600.00	4,704.00
37	6,456.00	4,680.00
38	6,420.00	4,656.00
39	6,396.00	4,608.00
40	6,360.00	4,560.00
41	6,336.00	4,500.00
42	6,300.00	4,440.00
43	6,276.00	4,380.00
44	6,240.00	4,320.00
45	6,216.00	4,260.00
46	6,180.00	4,200.00
47	6,156.00	4,140.00
48 and up	6,120.00	4,080.00

Service availability limited. Refer to # footnote on Page 7-149.

© 2022 Frontier Communications Parent, Inc. All rights reserved

7. Special Access Service (Cont'd)

7.5 Rates and Charges (Cont'd)

7.5.21 Dedicated SONET Entrance Facilities (DSEF)# (Cont'd)

(A5) Per **Price Band 4** STS12/ 662.08Mbps Termination W/ Fractional OC12 Interface

	Monthly Rate 3 Year Term	Monthly Rate 5 Year Term
1 to 11	NA	NA
12	7,392.00	5,640.00
13	7,296.00	5,580.00
14	7,260.00	5,460.00
15	7,236.00	5,400.00
16	7,200.00	5,340.00
17	7,176.00	5,280.00
18	7,140.00	5,220.00
19	7,116.00	5,160.00
20	7,080.00	5,088.00
21	7,056.00	5,064.00
22	7,020.00	5,040.00
23	6,996.00	5,016.00
24	6,960.00	4,992.00
25	6,936.00	4,968.00
26	6,900.00	4,944.00
27	6,876.00	4,920.00
28	6,840.00	4,896.00
29	6,816.00	4,872.00
30	6,780.00	4,848.00
31	6,756.00	4,824.00
32	6,720.00	4,800.00
33	6,696.00	4,776.00
34	6,660.00	4,752.00
35	6,636.00	4,728.00
36	6,600.00	4,704.00
37	6,456.00	4,680.00
38	6,420.00	4,656.00
39	6,396.00	4,608.00
40	6,360.00	4,560.00
41	6,336.00	4,500.00
42	6,300.00	4,440.00
43	6,276.00	4,380.00
44	6,240.00	4,320.00
45	6,216.00	4,260.00
46	6,180.00	4,200.00
47	6,156.00	4,140.00
48 and up	6,120.00	4,080.00

Service availability limited. Refer to # footnote on Page 7-149.

© 2022 Frontier Communications Parent, Inc. All rights reserved

7. Special Access Service (Cont'd)

7.5 Rates and Charges (Cont'd)

7.5.21 Dedicated SONET Entrance Facilities (DSEF)# (Cont'd)

(A5) Per **Price Band 5** STS12/ 662.08Mbps Termination W/ Fractional OC12 Interface

	Monthly Rate 3 Year Term	Monthly Rate 5 Year Term
1 to 11	NA	NA
12	7,392.00	5,640.00
13	7,296.00	5,580.00
14	7,260.00	5,460.00
15	7,236.00	5,400.00
16	7,200.00	5,340.00
17	7,176.00	5,280.00
18	7,140.00	5,220.00
19	7,116.00	5,160.00
20	7,080.00	5,088.00
21	7,056.00	5,064.00
22	7,020.00	5,040.00
23	6,996.00	5,016.00
24	6,960.00	4,992.00
25	6,936.00	4,968.00
26	6,900.00	4,944.00
27	6,876.00	4,920.00
28	6,840.00	4,896.00
29	6,816.00	4,872.00
30	6,780.00	4,848.00
31	6,756.00	4,824.00
32	6,720.00	4,800.00
33	6,696.00	4,776.00
34	6,660.00	4,752.00
35	6,636.00	4,728.00
36	6,600.00	4,704.00
37	6,456.00	4,680.00
38	6,420.00	4,656.00
39	6,396.00	4,608.00
40	6,360.00	4,560.00
41	6,336.00	4,500.00
42	6,300.00	4,440.00
43	6,276.00	4,380.00
44	6,240.00	4,320.00
45	6,216.00	4,260.00
46	6,180.00	4,200.00
47	6,156.00	4,140.00
48 and up	6,120.00	4,080.00

Service availability limited. Refer to # footnote on Page 7-149.

© 2022 Frontier Communications Parent, Inc. All rights reserved

7. Special Access Service (Cont'd)

7.5 Rates and Charges (Cont'd)

7.5.21 Dedicated SONET Entrance Facilities (DSEF)# (Cont'd)

(A5) Per **Price Band 6** STS12/ 662.08Mbps Termination W/ Fractional OC12 Interface

	Monthly Rate 3 Year Term	Monthly Rate 5 Year Term
1 to 11	NA	NA
12	7,392.00	5,640.00
13	7,296.00	5,580.00
14	7,260.00	5,460.00
15	7,236.00	5,400.00
16	7,200.00	5,340.00
17	7,176.00	5,280.00
18	7,140.00	5,220.00
19	7,116.00	5,160.00
20	7,080.00	5,088.00
21	7,056.00	5,064.00
22	7,020.00	5,040.00
23	6,996.00	5,016.00
24	6,960.00	4,992.00
25	6,936.00	4,968.00
26	6,900.00	4,944.00
27	6,876.00	4,920.00
28	6,840.00	4,896.00
29	6,816.00	4,872.00
30	6,780.00	4,848.00
31	6,756.00	4,824.00
32	6,720.00	4,800.00
33	6,696.00	4,776.00
34	6,660.00	4,752.00
35	6,636.00	4,728.00
36	6,600.00	4,704.00
37	6,456.00	4,680.00
38	6,420.00	4,656.00
39	6,396.00	4,608.00
40	6,360.00	4,560.00
41	6,336.00	4,500.00
42	6,300.00	4,440.00
43	6,276.00	4,380.00
44	6,240.00	4,320.00
45	6,216.00	4,260.00
46	6,180.00	4,200.00
47	6,156.00	4,140.00
48 and up	6,120.00	4,080.00

Service availability limited. Refer to # footnote on Page 7-149.

© 2022 Frontier Communications Parent, Inc. All rights reserved

7. Special Access Service (Cont'd)

7.5 Rates and Charges (Cont'd)

7.5.21 Dedicated SONET Entrance Facilities (DSEF)# (Cont'd)

(A6) **Price Cap** Total

STS1 Terminations W/ an OC48 Interface	Per STS1/51.84 Mbps Monthly Rate 3 Year Term	Monthly Rate 5 Year Term
1	$6,288.00	$4,488.00
2	3,144.00	2,244.00
3	2,096.00	1,496.00
4	1,572.00	1,122.00
5	1,258.00	898.00
6	1,048.00	748.00
7	898.00	641.00
8	786.00	561.00
9	699.00	499.00
10	629.00	449.00
11	572.00	408.00
12	524.00	374.00
13	517.00	373.00
14	515.00	371.00
15	513.00	369.00
16	510.00	368.00
17	509.00	366.00
18	506.00	364.00
19	505.00	363.00
20	502.00	361.00
21	500.00	359.00
22	498.00	357.00
23	496.00	356.00
24	493.00	354.00

Service availability limited. Refer to # footnote on Page 7-149.

© 2022 Frontier Communications Parent, Inc. All rights reserved

7. Special Access Service (Cont'd)

7.5 Rates and Charges (Cont'd)

7.5.21 Dedicated SONET Entrance Facilities (DSEF)# (Cont'd)

(A6)

Price Cap Total STS1 Terminations W/ an OC48 Interface	Per STS1/51.84 Mbps Monthly Rate 3 Year Term	Monthly Rate 5 Year Term
25	492.00	352.00
26	489.00	351.00
27	488.00	349.00
28	485.00	347.00
29	483.00	346.00
30	481.00	344.00
31	479.00	342.00
32	476.00	340.00
33	475.00	339.00
34	472.00	337.00
35	471.00	335.00
36	468.00	334.00
37	458.00	332.00
38	455.00	330.00
39	454.00	327.00
40	451.00	323.00
41	449.00	319.00
42	447.00	315.00
43	445.00	311.00
44	442.00	306.00
45	441.00	302.00
46	438.00	298.00
47	437.00	294.00
48 and up	434.00	289.00

Service availability limited. Refer to # footnote on Page 7-149.

© 2022 Frontier Communications Parent, Inc. All rights reserved

7. Special Access Service (Cont'd)

7.5 Rates and Charges (Cont'd)

7.5.21 Dedicated SONET Entrance Facilities (DSEF)# (Cont'd)

(A6) **Price Band 4** Total

STS1 Terminations W/ an OC48 Interface	Per STS1/51.84 Mbps Monthly Rate 3 Year Term	Monthly Rate 5 Year Term
1	$6,288.00	$4,488.00
2	3,144.00	2,244.00
3	2,096.00	1,496.00
4	1,572.00	1,122.00
5	1,258.00	898.00
6	1,048.00	748.00
7	898.00	641.00
8	786.00	561.00
9	699.00	499.00
10	629.00	449.00
11	572.00	408.00
12	524.00	374.00
13	517.00	373.00
14	515.00	371.00
15	513.00	369.00
16	510.00	368.00
17	509.00	366.00
18	506.00	364.00
19	505.00	363.00
20	502.00	361.00
21	500.00	359.00
22	498.00	357.00
23	496.00	356.00
24	493.00	354.00

Service availability limited. Refer to # footnote on Page 7-149.

© 2022 Frontier Communications Parent, Inc. All rights reserved

7. Special Access Service (Cont'd)

7.5 Rates and Charges (Cont'd)

7.5.21 Dedicated SONET Entrance Facilities (DSEF)# (Cont'd)

(A6) **Price Band 4** Total STS1 Terminations W/ an OC48 Interface	Per STS1/51.84 Mbps Monthly Rate 3 Year Term	Monthly Rate 5 Year Term
25	492.00	352.00
26	489.00	351.00
27	488.00	349.00
28	485.00	347.00
29	483.00	346.00
30	481.00	344.00
31	479.00	342.00
32	476.00	340.00
33	475.00	339.00
34	472.00	337.00
35	471.00	335.00
36	468.00	334.00
37	458.00	332.00
38	455.00	330.00
39	454.00	327.00
40	451.00	323.00
41	449.00	319.00
42	447.00	315.00
43	445.00	311.00
44	442.00	306.00
45	441.00	302.00
46	438.00	298.00
47	437.00	294.00
48 and up	434.00	289.00

Service availability limited. Refer to # footnote on Page 7-149.

© 2022 Frontier Communications Parent, Inc. All rights reserved

7. Special Access Service (Cont'd)

7.5 Rates and Charges (Cont'd)

7.5.21 Dedicated SONET Entrance Facilities (DSEF)# (Cont'd)

(A6) **Price Band 5** Total

STS1 Terminations W/ an OC48 Interface	Per STS1/51.84 Mbps Monthly Rate 3 Year Term	Monthly Rate 5 Year Term
1	$6,288.00	$4,488.00
2	3,144.00	2,244.00
3	2,096.00	1,496.00
4	1,572.00	1,122.00
5	1,258.00	898.00
6	1,048.00	748.00
7	898.00	641.00
8	786.00	561.00
9	699.00	499.00
10	629.00	449.00
11	572.00	408.00
12	524.00	374.00
13	517.00	373.00
14	515.00	371.00
15	513.00	369.00
16	510.00	368.00
17	509.00	366.00
18	506.00	364.00
19	505.00	363.00
20	502.00	361.00
21	500.00	359.00
22	498.00	357.00
23	496.00	356.00
24	493.00	354.00

Service availability limited. Refer to # footnote on Page 7-149.

© 2022 Frontier Communications Parent, Inc. All rights reserved

7. Special Access Service (Cont'd)

7.5 Rates and Charges (Cont'd)

7.5.21 Dedicated SONET Entrance Facilities (DSEF)# (Cont'd)

(A6) **Price Band 5** Total STS1 Terminations W/ an OC48 Interface	Per STS1/51.84 Mbps Monthly Rate 3 Year Term	Monthly Rate 5 Year Term
25	492.00	352.00
26	489.00	351.00
27	488.00	349.00
28	485.00	347.00
29	483.00	346.00
30	481.00	344.00
31	479.00	342.00
32	476.00	340.00
33	475.00	339.00
34	472.00	337.00
35	471.00	335.00
36	468.00	334.00
37	458.00	332.00
38	455.00	330.00
39	454.00	327.00
40	451.00	323.00
41	449.00	319.00
42	447.00	315.00
43	445.00	311.00
44	442.00	306.00
45	441.00	302.00
46	438.00	298.00
47	437.00	294.00
48 and up	434.00	289.00

Service availability limited. Refer to # footnote on Page 7-149.

© 2022 Frontier Communications Parent, Inc. All rights reserved

7. Special Access Service (Cont'd)

7.5 Rates and Charges (Cont'd)

7.5.21 Dedicated SONET Entrance Facilities (DSEF)# (Cont'd)

(A6) **Price Band 6** Total

STS1 Terminations W/ an OC48 Interface	Per STS1/51.84 Mbps Monthly Rate 3 Year Term	Monthly Rate 5 Year Term
1	$6,288.00	$4,488.00
2	3,144.00	2,244.00
3	2,096.00	1,496.00
4	1,572.00	1,122.00
5	1,258.00	898.00
6	1,048.00	748.00
7	898.00	641.00
8	786.00	561.00
9	699.00	499.00
10	629.00	449.00
11	572.00	408.00
12	524.00	374.00
13	517.00	373.00
14	515.00	371.00
15	513.00	369.00
16	510.00	368.00
17	509.00	366.00
18	506.00	364.00
19	505.00	363.00
20	502.00	361.00
21	500.00	359.00
22	498.00	357.00
23	496.00	356.00
24	493.00	354.00

Service availability limited. Refer to # footnote on Page 7-149.

© 2022 Frontier Communications Parent, Inc. All rights reserved

7. Special Access Service (Cont'd)

7.5 Rates and Charges (Cont'd)

7.5.21 Dedicated SONET Entrance Facilities (DSEF)# (Cont'd)

(A6)

Price Band 6 Total STS1 Terminations W/ an OC48 Interface	Per STS1/51.84 Mbps Monthly Rate 3 Year Term	Monthly Rate 5 Year Term
25	492.00	352.00
26	489.00	351.00
27	488.00	349.00
28	485.00	347.00
29	483.00	346.00
30	481.00	344.00
31	479.00	342.00
32	476.00	340.00
33	475.00	339.00
34	472.00	337.00
35	471.00	335.00
36	468.00	334.00
37	458.00	332.00
38	455.00	330.00
39	454.00	327.00
40	451.00	323.00
41	449.00	319.00
42	447.00	315.00
43	445.00	311.00
44	442.00	306.00
45	441.00	302.00
46	438.00	298.00
47	437.00	294.00
48 and up	434.00	289.00

Service availability limited. Refer to # footnote on Page 7-149.

© 2022 Frontier Communications Parent, Inc. All rights reserved

7. Special Access Service (Cont'd)

7.5 Rates and Charges (Cont'd)

7.5.21 Dedicated SONET Entrance Facilities (DSEF)# (Cont'd)

(A7) **N-MSA**

Total STS1 Terminations With an OC48 Interface	Per STS3/155.58 Mbps Monthly Rate 3 Year Term	Per STS3/155.58 Mbps Monthly Rate 5 Year Term
NA	NA	NA
NA	NA	NA
3	$6,288.00	$4,488.00
4	4,716.00	3,366.00
5	3,774.00	2,694.00
6	3,144.00	2,244.00
7	2,694.00	1,923.00
8	2,358.00	1,683.00
9	2,097.00	1,497.00
10	1,887.00	1,347.00
11	1,716.00	1,224.00
12	1,572.00	1,122.00
13	1,551.00	1,119.00
14	1,545.00	1,113.00
15	1,539.00	1,107.00
16	1,530.00	1,104.00
17	1,527.00	1,098.00
18	1,518.00	1,092.00
19	1,515.00	1,089.00
20	1,506.00	1,083.00
21	1,500.00	1,077.00
22	1,494.00	1,071.00
23	1,488.00	1,068.00
24	1,479.00	1,062.00

Service availability limited. Refer to # footnote on Page 7-149.

© 2022 Frontier Communications Parent, Inc. All rights reserved

7. Special Access Service (Cont'd)

7.5 Rates and Charges (Cont'd)

7.5.21 Dedicated SONET Entrance Facilities (DSEF)# (Cont'd)

(A7) **N-MSA**

Total STS1 Terminations With an OC48 Interface	Per STS3/155.58 Mbps Monthly Rate 3 Year Term	Monthly Rate 5 Year Term
25	1,476.00	1,056.00
26	1,467.00	1,053.00
27	1,464.00	1,047.00
28	1,455.00	1,041.00
29	1,449.00	1,038.00
30	1,443.00	1,032.00
31	1,437.00	1,026.00
32	1,428.00	1,020.00
33	1,425.00	1,017.00
34	1,416.00	1,011.00
35	1,413.00	1,005.00
36	1,404.00	1,002.00
37	1,374.00	996.00
38	1,365.00	990.00
39	1,362.00	981.00
40	1,353.00	969.00
41	1,347.00	957.00
42	1,341.00	945.00
43	1,335.00	933.00
44	1,326.00	918.00
45	1,323.00	906.00
46	1,314.00	894.00
47	1,311.00	882.00
48 and up	1,302.00	867.00

Service availability limited. Refer to # footnote on Page 7-149.

© 2022 Frontier Communications Parent, Inc. All rights reserved

7. Special Access Service (Cont'd)

7.5 Rates and Charges (Cont'd)

7.5.21 Dedicated SONET Entrance Facilities (DSEF)# (Cont'd)

(A7) **Price Band 4**

Total STS1 Terminations With an OC48 Interface	Per STS3/155.58 Mbps Monthly Rate 3 Year Term	Monthly Rate 5 Year Term
NA	NA	NA
NA	NA	NA
3	$6,288.00	$4,488.00
4	4,716.00	3,366.00
5	3,774.00	2,694.00
6	3,144.00	2,244.00
7	2,694.00	1,923.00
8	2,358.00	1,683.00
9	2,097.00	1,497.00
10	1,887.00	1,347.00
11	1,716.00	1,224.00
12	1,572.00	1,122.00
13	1,551.00	1,119.00
14	1,545.00	1,113.00
15	1,539.00	1,107.00
16	1,530.00	1,104.00
17	1,527.00	1,098.00
18	1,518.00	1,092.00
19	1,515.00	1,089.00
20	1,506.00	1,083.00
21	1,500.00	1,077.00
22	1,494.00	1,071.00
23	1,488.00	1,068.00
24	1,479.00	1,062.00

Service availability limited. Refer to # footnote on Page 7-149.

© 2022 Frontier Communications Parent, Inc. All rights reserved

7. Special Access Service (Cont'd)

7.5 Rates and Charges (Cont'd)

7.5.21 Dedicated SONET Entrance Facilities (DSEF)# (Cont'd)

(A7) **Price Band 4**

Total STS1 Terminations With an OC48 Interface	Per STS3/155.58 Mbps Monthly Rate 3 Year Term	Monthly Rate 5 Year Term
25	1,476.00	1,056.00
26	1,467.00	1,053.00
27	1,464.00	1,047.00
28	1,455.00	1,041.00
29	1,449.00	1,038.00
30	1,443.00	1,032.00
31	1,437.00	1,026.00
32	1,428.00	1,020.00
33	1,425.00	1,017.00
34	1,416.00	1,011.00
35	1,413.00	1,005.00
36	1,404.00	1,002.00
37	1,374.00	996.00
38	1,365.00	990.00
39	1,362.00	981.00
40	1,353.00	969.00
41	1,347.00	957.00
42	1,341.00	945.00
43	1,335.00	933.00
44	1,326.00	918.00
45	1,323.00	906.00
46	1,314.00	894.00
47	1,311.00	882.00
48 and up	1,302.00	867.00

Service availability limited. Refer to # footnote on Page 7-149.

© 2022 Frontier Communications Parent, Inc. All rights reserved

7. Special Access Service (Cont'd)

7.5 Rates and Charges (Cont'd)

7.5.21 Dedicated SONET Entrance Facilities (DSEF)# (Cont'd)

(A7) **Price Band 5**

Total STS1 Terminations With an OC48 Interface	Per STS3/155.58 Mbps Monthly Rate 3 Year Term	Monthly Rate 5 Year Term
NA	NA	NA
NA	NA	NA
3	$6,288.00	$4,488.00
4	4,716.00	3,366.00
5	3,774.00	2,694.00
6	3,144.00	2,244.00
7	2,694.00	1,923.00
8	2,358.00	1,683.00
9	2,097.00	1,497.00
10	1,887.00	1,347.00
11	1,716.00	1,224.00
12	1,572.00	1,122.00
13	1,551.00	1,119.00
14	1,545.00	1,113.00
15	1,539.00	1,107.00
16	1,530.00	1,104.00
17	1,527.00	1,098.00
18	1,518.00	1,092.00
19	1,515.00	1,089.00
20	1,506.00	1,083.00
21	1,500.00	1,077.00
22	1,494.00	1,071.00
23	1,488.00	1,068.00
24	1,479.00	1,062.00

Service availability limited. Refer to # footnote on Page 7-149.

© 2022 Frontier Communications Parent, Inc. All rights reserved

7. Special Access Service (Cont'd)

7.5 Rates and Charges (Cont'd)

7.5.21 Dedicated SONET Entrance Facilities (DSEF)# (Cont'd)

(A7) **Price Band 5**

Total STS1 Terminations With an OC48 Interface	Per STS3/155.58 Mbps Monthly Rate 3 Year Term	Monthly Rate 5 Year Term
25	1,476.00	1,056.00
26	1,467.00	1,053.00
27	1,464.00	1,047.00
28	1,455.00	1,041.00
29	1,449.00	1,038.00
30	1,443.00	1,032.00
31	1,437.00	1,026.00
32	1,428.00	1,020.00
33	1,425.00	1,017.00
34	1,416.00	1,011.00
35	1,413.00	1,005.00
36	1,404.00	1,002.00
37	1,374.00	996.00
38	1,365.00	990.00
39	1,362.00	981.00
40	1,353.00	969.00
41	1,347.00	957.00
42	1,341.00	945.00
43	1,335.00	933.00
44	1,326.00	918.00
45	1,323.00	906.00
46	1,314.00	894.00
47	1,311.00	882.00
48 and up	1,302.00	867.00

Service availability limited. Refer to # footnote on Page 7-149.

© 2022 Frontier Communications Parent, Inc. All rights reserved

7. Special Access Service (Cont'd)

7.5 Rates and Charges (Cont'd)

7.5.21 Dedicated SONET Entrance Facilities (DSEF)# (Cont'd)

(A7) **Price Band 6**

Total STS1 Terminations With an OC48 Interface	Per STS3/155.58 Mbps Monthly Rate 3 Year Term	Per STS3/155.58 Mbps Monthly Rate 5 Year Term
NA	NA	NA
NA	NA	NA
3	$6,288.00	$4,488.00
4	4,716.00	3,366.00
5	3,774.00	2,694.00
6	3,144.00	2,244.00
7	2,694.00	1,923.00
8	2,358.00	1,683.00
9	2,097.00	1,497.00
10	1,887.00	1,347.00
11	1,716.00	1,224.00
12	1,572.00	1,122.00
13	1,551.00	1,119.00
14	1,545.00	1,113.00
15	1,539.00	1,107.00
16	1,530.00	1,104.00
17	1,527.00	1,098.00
18	1,518.00	1,092.00
19	1,515.00	1,089.00
20	1,506.00	1,083.00
21	1,500.00	1,077.00
22	1,494.00	1,071.00
23	1,488.00	1,068.00
24	1,479.00	1,062.00

Service availability limited. Refer to # footnote on Page 7-149.

© 2022 Frontier Communications Parent, Inc. All rights reserved

7. Special Access Service (Cont'd)

7.5 Rates and Charges (Cont'd)

7.5.21 Dedicated SONET Entrance Facilities (DSEF)# (Cont'd)

(A7) **Price Band 6**

Total STS1 Terminations With an OC48 Interface	Per STS3/155.58 Mbps Monthly Rate 3 Year Term	Monthly Rate 5 Year Term
25	1,476.00	1,056.00
26	1,467.00	1,053.00
27	1,464.00	1,047.00
28	1,455.00	1,041.00
29	1,449.00	1,038.00
30	1,443.00	1,032.00
31	1,437.00	1,026.00
32	1,428.00	1,020.00
33	1,425.00	1,017.00
34	1,416.00	1,011.00
35	1,413.00	1,005.00
36	1,404.00	1,002.00
37	1,374.00	996.00
38	1,365.00	990.00
39	1,362.00	981.00
40	1,353.00	969.00
41	1,347.00	957.00
42	1,341.00	945.00
43	1,335.00	933.00
44	1,326.00	918.00
45	1,323.00	906.00
46	1,314.00	894.00
47	1,311.00	882.00
48 and up	1,302.00	867.00

Service availability limited. Refer to # footnote on Page 7-149.

© 2022 Frontier Communications Parent, Inc. All rights reserved

7. Special Access Service (Cont'd)

7.5 Rates and Charges (Cont'd)

7.5.21 Dedicated SONET Entrance Facilities (DSEF)# (Cont'd)

(A8) **N-MSA**

Total STS1 Terminations With an OC48 Interface	Per STS12/662.08 Mbps Monthly Rate 3 Year Term	Monthly Rate 5 Year Term
1 to 11	NA	NA
12	6,288.00	4,488.00
13	6,204.00	4,476.00
14	6,180.00	4,452.00
15	6,156.00	4,428.00
16	6,120.00	4,416.00
17	6,108.00	4,392.00
18	6,072.00	4,368.00
19	6,060.00	4,356.00
20	6,024.00	4,332.00
21	6,000.00	4,308.00
22	5,976.00	4,284.00
23	5,952.00	4,272.00
24	5,916.00	4,248.00
25	5,904.00	4,224.00
26	5,868.00	4,212.00
27	5,856.00	4,188.00
28	5,820.00	4,164.00
29	5,796.00	4,152.00
30	5,772.00	4,128.00
31	5,748.00	4,104.00
32	5,712.00	4,080.00
33	5,700.00	4,068.00
34	5,664.00	4,044.00
35	5,652.00	4,020.00
36	5,616.00	4,008.00
37	5,496.00	3,984.00
38	5,460.00	3,960.00
39	5,448.00	3,924.00
40	5,412.00	3,876.00
41	5,388.00	3,828.00
42	5,364.00	3,780.00
43	5,340.00	3,732.00
44	5,304.00	3,672.00
45	5,292.00	3,624.00
46	5,256.00	3,576.00
47	5,244.00	3,528.00
48 and up	5,208.00	3,468.00

Service availability limited. Refer to # footnote on Page 7-149.

© 2022 Frontier Communications Parent, Inc. All rights reserved

7. Special Access Service (Cont'd)

7.5 Rates and Charges (Cont'd)

7.5.21 Dedicated SONET Entrance Facilities (DSEF)# (Cont'd)

(A8) **Price Band 4**

Total STS1 Terminations With an OC48 Interface	Per STS12/662.08 Mbps Monthly Rate 3 Year Term	Monthly Rate 5 Year Term
1 to 11	NA	NA
12	6,288.00	4,488.00
13	6,204.00	4,476.00
14	6,180.00	4,452.00
15	6,156.00	4,428.00
16	6,120.00	4,416.00
17	6,108.00	4,392.00
18	6,072.00	4,368.00
19	6,060.00	4,356.00
20	6,024.00	4,332.00
21	6,000.00	4,308.00
22	5,976.00	4,284.00
23	5,952.00	4,272.00
24	5,916.00	4,248.00
25	5,904.00	4,224.00
26	5,868.00	4,212.00
27	5,856.00	4,188.00
28	5,820.00	4,164.00
29	5,796.00	4,152.00
30	5,772.00	4,128.00
31	5,748.00	4,104.00
32	5,712.00	4,080.00
33	5,700.00	4,068.00
34	5,664.00	4,044.00
35	5,652.00	4,020.00
36	5,616.00	4,008.00
37	5,496.00	3,984.00
38	5,460.00	3,960.00
39	5,448.00	3,924.00
40	5,412.00	3,876.00
41	5,388.00	3,828.00
42	5,364.00	3,780.00
43	5,340.00	3,732.00
44	5,304.00	3,672.00
45	5,292.00	3,624.00
46	5,256.00	3,576.00
47	5,244.00	3,528.00
48 and up	5,208.00	3,468.00

Service availability limited. Refer to # footnote on Page 7-149.

© 2022 Frontier Communications Parent, Inc. All rights reserved

7. Special Access Service (Cont'd)

7.5 Rates and Charges (Cont'd)

7.5.21 Dedicated SONET Entrance Facilities (DSEF)# (Cont'd)

(A8) **Price Band 5**

Total STS1 Terminations With an OC48 Interface	Per STS12/662.08 Mbps Monthly Rate 3 Year Term	Monthly Rate 5 Year Term
1 to 11	NA	NA
12	6,288.00	4,488.00
13	6,204.00	4,476.00
14	6,180.00	4,452.00
15	6,156.00	4,428.00
16	6,120.00	4,416.00
17	6,108.00	4,392.00
18	6,072.00	4,368.00
19	6,060.00	4,356.00
20	6,024.00	4,332.00
21	6,000.00	4,308.00
22	5,976.00	4,284.00
23	5,952.00	4,272.00
24	5,916.00	4,248.00
25	5,904.00	4,224.00
26	5,868.00	4,212.00
27	5,856.00	4,188.00
28	5,820.00	4,164.00
29	5,796.00	4,152.00
30	5,772.00	4,128.00
31	5,748.00	4,104.00
32	5,712.00	4,080.00
33	5,700.00	4,068.00
34	5,664.00	4,044.00
35	5,652.00	4,020.00
36	5,616.00	4,008.00
37	5,496.00	3,984.00
38	5,460.00	3,960.00
39	5,448.00	3,924.00
40	5,412.00	3,876.00
41	5,388.00	3,828.00
42	5,364.00	3,780.00
43	5,340.00	3,732.00
44	5,304.00	3,672.00
45	5,292.00	3,624.00
46	5,256.00	3,576.00
47	5,244.00	3,528.00
48 and up	5,208.00	3,468.00

Service availability limited. Refer to # footnote on Page 7-149.

© 2022 Frontier Communications Parent, Inc. All rights reserved

7. Special Access Service (Cont'd)

7.5 Rates and Charges (Cont'd)

7.5.21 Dedicated SONET Entrance Facilities (DSEF)# (Cont'd)

(A8) **Price Band 6**

Total STS1 Terminations With an OC48 Interface	Per STS12/662.08 Mbps Monthly Rate 3 Year Term	Monthly Rate 5 Year Term
1 to 11	NA	NA
12	6,288.00	4,488.00
13	6,204.00	4,476.00
14	6,180.00	4,452.00
15	6,156.00	4,428.00
16	6,120.00	4,416.00
17	6,108.00	4,392.00
18	6,072.00	4,368.00
19	6,060.00	4,356.00
20	6,024.00	4,332.00
21	6,000.00	4,308.00
22	5,976.00	4,284.00
23	5,952.00	4,272.00
24	5,916.00	4,248.00
25	5,904.00	4,224.00
26	5,868.00	4,212.00
27	5,856.00	4,188.00
28	5,820.00	4,164.00
29	5,796.00	4,152.00
30	5,772.00	4,128.00
31	5,748.00	4,104.00
32	5,712.00	4,080.00
33	5,700.00	4,068.00
34	5,664.00	4,044.00
35	5,652.00	4,020.00
36	5,616.00	4,008.00
37	5,496.00	3,984.00
38	5,460.00	3,960.00
39	5,448.00	3,924.00
40	5,412.00	3,876.00
41	5,388.00	3,828.00
42	5,364.00	3,780.00
43	5,340.00	3,732.00
44	5,304.00	3,672.00
45	5,292.00	3,624.00
46	5,256.00	3,576.00
47	5,244.00	3,528.00
48 and up	5,208.00	3,468.00

Service availability limited. Refer to # footnote on Page 7-149.

© 2022 Frontier Communications Parent, Inc. All rights reserved

7. Special Access Service (Cont'd)

7.5 Rates and Charges (Cont'd)

7.5.21 Dedicated SONET Entrance Facilities (DSEF)# (Cont'd)

(B)

DSEF Electrical Interfaces	Monthly Rate 3 Year Term	Monthly Rate 5 Year Term
STS1 Interface		
Price Cap	$157.00	$105.00
Price Band 4	157.00	105.00
Price Band 5	157.00	105.00
Price Band 6	157.00	105.00
DS3 Interface		
Price Cap	157.00	105.00
Price Band 4	157.00	105.00
Price Band 5	157.00	105.00
Price Band 6	157.00	105.00
DS1 Interface		
Price Cap	45.00	35.00
Price Band 4	45.00	35.00
Price Band 5	45.00	35.00
Price Band 6	45.00	35.00

(C) DSEF Installation Charges

1) Initial Installation

1a) -Per Termination	Nonrecurring Charges First	Nonrecurring Charges Additional
-STS1 w/ separate Interface		
Price Cap	$1.00	$0.75
Price Band 4	1.00	0.75
Price Band 5	1.00	0.75
Price Band 6	1.00	0.75
-STS1 w/ Fract'l OC3 Interface		
Price Cap	2.00	1.50
Price Band 4	2.00	1.50
Price Band 5	2.00	1.50
Price Band 6	2.00	1.50

Service availability limited. Refer to # footnote on Page 7-149.

© 2022 Frontier Communications Parent, Inc. All rights reserved

7. Special Access Service (Cont'd)

7.5 Rates and Charges (Cont'd)

7.5.21 Dedicated SONET Entrance Facilities (DSEF)# (Cont'd)

(C) DSEF Installation Charges (Cont'd)

1) Initial Installation (Cont'd)

1a) -Per Termination	Nonrecurring Charges First	Nonrecurring Charges Additional
-STS1 w/ Fract'l OC12 Interface		
Price Cap	2.00	1.50
Price Band 4	2.00	1.50
Price Band 5	2.00	1.50
Price Band 6	2.00	1.50
-STS1 w/ OC48 Interface		
Price Cap	3.00	NA
Price Band 4	3.00	NA
Price Band 5	3.00	NA
Price Band 6	3.00	NA
-STS3 w/ Fract'l OC3 Interface		
N-MSA	6.00	4.50
Price Band 4	6.00	4.50
Price Band 5	6.00	4.50
Price Band 6	6.00	4.50
-STS3 w/ Fract'l OC12 Interface		
N-MSA	6.00	4.50
Price Band 4	6.00	4.50
Price Band 5	6.00	4.50
Price Band 6	6.00	4.50
-STS3 w/ OC48 Interface		
N-MSA	9.00	NA
Price Band 4	9.00	NA
Price Band 5	9.00	NA
Price Band 6	9.00	NA
-STS12 w/ Fract'l OC12 Interface		
N-MSA	24.00	9.00
Price Band 4	24.00	9.00
Price Band 5	24.00	9.00
Price Band 6	24.00	9.00
-STS12 w/ OC48 Interface		
N-MSA	36.00	NA
Price Band 4	36.00	NA
Price Band 5	36.00	NA
Price Band 6	36.00	NA

Service availability limited. Refer to # footnote on Page 7-149.

© 2022 Frontier Communications Parent, Inc. All rights reserved

7. Special Access Service (Cont'd)

7.5 Rates and Charges (Cont'd)

7.5.21 Dedicated SONET Entrance Facilities (DSEF)# (Cont'd)

(C) DSEF Installation Charges (Cont'd)

1b) -Per Interface	Nonrecurring Charges First	Nonrecurring Charges Additional
- per STS1		
Price Cap	$1.00	$0.75
Price Band 4	1.00	0.75
Price Band 5	1.00	0.75
Price Band 6	1.00	0.75
- per DS3		
Price Cap	1.00	0.75
Price Band 4	1.00	0.75
Price Band 5	1.00	0.75
Price Band 6	1.00	0.75
- per DS1		
Price Cap	1.00	0.75
Price Band 4	1.00	0.75
Price Band 5	1.00	0.75
Price Band 6	1.00	0.75

2) Subsequent Installation

2a) -Per Termination

-STS1 w/ separate Interface		
Price Cap	1.00	0.75
Price Band 4	1.00	0.75
Price Band 5	1.00	0.75
Price Band 6	1.00	0.75
-STS1 w/ Fract'l OC3 Interface		
Price Cap	2.00	1.50
Price Band 4	2.00	1.50
Price Band 5	2.00	1.50
Price Band 6	2.00	1.50
-STS1 w/ Fract'l OC12 Interface		
Price Cap	$2.00	$1.50
Price Band 4	2.00	1.50
Price Band 5	2.00	1.50
Price Band 6	2.00	1.50

Service availability limited. Refer to # footnote on Page 7-149.

© 2022 Frontier Communications Parent, Inc. All rights reserved

7. Special Access Service (Cont'd)

7.5 Rates and Charges (Cont'd)

7.5.21 Dedicated SONET Entrance Facilities (DSEF)# (Cont'd)

(C) DSEF Installation Charges (Cont'd)

2) Subsequent Installation Cont'd)

2a) -Per Termination (Cont'd)

	Nonrecurring Charges First	Nonrecurring Charges Additional
-STS1 w/ OC48 Interface		
Price Cap	3.00	NA
Price Band 4	3.00	NA
Price Band 5	3.00	NA
Price Band 6	3.00	NA
-STS3 w/ Fract'l OC3 Interface		
N-MSA	6.00	4.50
Price Band 4	6.00	4.50
Price Band 5	6.00	4.50
Price Band 6	6.00	4.50
-STS3 w/ Fract'l OC12 Interface		
N-MSA	6.00	4.50
Price Band 4	6.00	4.50
Price Band 5	6.00	4.50
Price Band 6	6.00	4.50
-STS3 w/ OC48 Interface		
N-MSA	9.00	NA
Price Band 4	9.00	NA
Price Band 5	9.00	NA
Price Band 6	9.00	NA
-STS12 w/ Fract'l OC12 Interface		
N-MSA	24.00	9.00
Price Band 4	24.00	9.00
Price Band 5	24.00	9.00
Price Band 6	24.00	9.00
-STS12 w/ OC48 Interface	36.00	NA
N-MSA	36.00	NA
Price Band 4	36.00	NA
Price Band 5	36.00	NA
Price Band 6	36.00	NA

Service availability limited. Refer to # footnote on Page 7-149.

© 2022 Frontier Communications Parent, Inc. All rights reserved

7. Special Access Service (Cont'd)

7.5 Rates and Charges (Cont'd)

7.5.21 Dedicated SONET Entrance Facilities (DSEF)# (Cont'd)

(C) DSEF Installation Charges (Cont'd)

2) Subsequent Installation (Cont'd)

2b) -Per Interface

- per STS1		
Price Cap	$1.00	$0.75
Price Band 4	1.00	0.75
Price Band 5	1.00	0.75
Price Band 6	1.00	0.75
- per DS3		
Price Cap	1.00	0.75
Price Band 4	1.00	0.75
Price Band 5	1.00	0.75
Price Band 6	1.00	0.75
- per DS1		
Price Cap	1.00	0.75
Price Band 4	1.00	0.75
Price Band 5	1.00	0.75
Price Band 6	1.00	0.75

Optional Features	Monthly Rate 3 Year Term	Monthly Rate 5 Year Term
1) Grooming		
Price Band 4	1.00	1.00
Price Band 5	1.00	1.00
Price Band 6	1.00	1.00

Service availability limited. Refer to # footnote on Page 7-149.

© 2022 Frontier Communications Parent, Inc. All rights reserved

7. Special Access Service (Cont'd)

7.5 Rates and Charges (Cont'd)

7.5.22 Dedicated SONET Shared Assurance Network#

© 2022 Frontier Communications Parent, Inc. All rights reserved

7. Special Access Service (Cont'd)

7.5 Rates and Charges (Cont'd)

7.5.22 Dedicated SONET Shared Assurance Network# (Cont'd)

(A) **DSSAN POP Entrance Ring** (Cont'd)
- Per STS3 termination

Price Band 4	Single POP	Two POP	
# of STS3s	Monthly Rate	Monthly Rate	Nonrecurring Rate
4 Minimum	$2,340.00	$2,890.00	$1.00
5	2,230.00	2,780.00	1.00
6	2,125.00	2,670.00	1.00
7	2,020.00	2,560.00	1.00
8	1,930.00	2,485.00	1.00
9	1,865.00	2,300.00	1.00
10	1,815.00	2,225.00	1.00
11	1,775.00	2,175.00	1.00
12	1,735.00	2,110.00	1.00
13	1,695.00	2,050.00	1.00
14	1,655.00	1,995.00	1.00
15	1,620.00	1,930.00	1.00
16	1,585.00	1,895.00	1.00
17	1,585.00	1,825.00	1.00
18	1,585.00	1,825.00	1.00
19	1,585.00	1,825.00	1.00
20	1,585.00	1,825.00	1.00
21	1,535.00	1,760.00	1.00
22	1,535.00	1,760.00	1.00
23	1,535.00	1,760.00	1.00
24	1,535.00	1,760.00	1.00
25	1,450.00	1,695.00	1.00
26	1,450.00	1,695.00	1.00
27	1,450.0	1,695.00	1.00
28	1,450.00	1,695.00	1.00
29	1,320.00	1,640.00	1.00
29 +	1,320.00	1,640.00	1.00

1) **Additional Price Band 4 POP Entrance Ring Mileage**
(for rings over 10 air miles in circumference)
- Per each group of 16 STS3s, per mile for each mile over 10

Monthly rate: $700.00

Service availability limited. Refer to # footnote on Page 7-106.

© 2022 Frontier Communications Parent, Inc. All rights reserved

© 2022 Frontier Communications Parent, Inc. All rights reserved

7. Special Access Service (Cont'd)

7.5 Rates and Charges (Cont'd)

7.5.22 Dedicated SONET Shared Assurance Network# (Cont'd)

(A) **DSSAN POP Entrance Ring** (Cont'd)
- Per STS3 termination

Price Band 5	Single POP	Two POP	
# of STS3s	Monthly Rate	Monthly Rate	Nonrecurring Rate
4 Minimum	$2,340.00	$2,890.00	$1.00
5	2,230.00	2,780.00	1.00
6	2,125.00	2,670.00	1.00
7	2,020.00	2,560.00	1.00
8	1,930.00	2,485.00	1.00
9	1,865.00	2,300.00	1.00
10	1,815.00	2,225.00	1.00
11	1,775.00	2,175.00	1.00
12	1,735.00	2,110.00	1.00
13	1,695.00	2,050.00	1.00
14	1,655.00	1,995.00	1.00
15	1,620.00	1,930.00	1.00
16	1,585.00	1,895.00	1.00
17	1,585.00	1,825.00	1.00
18	1,585.00	1,825.00	1.00
19	1,585.00	1,825.00	1.00
20	1,585.00	1,825.00	1.00
21	1,535.00	1,760.00	1.00
22	1,535.00	1,760.00	1.00
23	1,535.00	1,760.00	1.00
24	1,535.00	1,760.00	1.00
25	1,450.00	1,695.00	1.00
26	1,450.00	1,695.00	1.00
27	1,450.0	1,695.00	1.00
28	1,450.00	1,695.00	1.00
29	1,320.00	1,640.00	1.00
29 +	1,320.00	1,640.00	1.00

1) **Additional Price Band 5 POP Entrance Ring Mileage**
(for rings over 10 air miles in circumference)
- Per each group of 16 STS3s, per mile for each mile over 10

Monthly rate: $700.00

Service availability limited. Refer to # footnote on Page 7-106.

© 2022 Frontier Communications Parent, Inc. All rights reserved

7. Special Access Service (Cont'd)

7.5 Rates and Charges (Cont'd)

7.5.22 Dedicated SONET Shared Assurance Network# (Cont'd)

(A) **DSSAN POP Entrance Ring** (Cont'd)
- Per STS3 termination

Price Band 6	Single POP	Two POP	
# of STS3s	Monthly Rate	Monthly Rate	Nonrecurring Rate
4 Minimum	$2,340.00	$2,890.00	$1.00
5	2,230.00	2,780.00	1.00
6	2,125.00	2,670.00	1.00
7	2,020.00	2,560.00	1.00
8	1,930.00	2,485.00	1.00
9	1,865.00	2,300.00	1.00
10	1,815.00	2,225.00	1.00
11	1,775.00	2,175.00	1.00
12	1,735.00	2,110.00	1.00
13	1,695.00	2,050.00	1.00
14	1,655.00	1,995.00	1.00
15	1,620.00	1,930.00	1.00
16	1,585.00	1,895.00	1.00
17	1,585.00	1,825.00	1.00
18	1,585.00	1,825.00	1.00
19	1,585.00	1,825.00	1.00
20	1,585.00	1,825.00	1.00
21	1,535.00	1,760.00	1.00
22	1,535.00	1,760.00	1.00
23	1,535.00	1,760.00	1.00
24	1,535.00	1,760.00	1.00
25	1,450.00	1,695.00	1.00
26	1,450.00	1,695.00	1.00
27	1,450.0	1,695.00	1.00
28	1,450.00	1,695.00	1.00
29	1,320.00	1,640.00	1.00
29 +	1,320.00	1,640.00	1.00

1) **Additional Price Band 6 POP Entrance Ring Mileage**
(for rings over 10 air miles in circumference)
- Per each group of 16 STS3s, per mile for each mile over 10

Monthly rate: $700.00

Service availability limited. Refer to # footnote on Page 7-106.

© 2022 Frontier Communications Parent, Inc. All rights reserved

7. Special Access Service (Cont'd

7.5 Rates and Charges (Cont'd)

7.5.22 Dedicated SONET Shared Assurance Network# (Cont'd)

(B) **DSSAN Transport Channels**
-from the POP SWC

	Mileage Bands		
	0–3 Miles	4-20 Miles	20+ Miles
1) DS1 Transport			
Basic On-Net			
N-MSA	$200.00	$290.00	$400.00
Price Band 4	200.00	290.00	400.00
Price Band 5	200.00	290.00	400.00
Price Band 6	200.00	290.00	400.00
Premium On-Net			
N-MSA	220.00	320.00	440.00
Price Band 4	220.00	320.00	440.00
Price Band 5	220.00	320.00	440.00
Price Band 6	220.00	320.00	440.00
Basic Off-Net			
N-MSA	230.00	315.00	435.00
Price Band 4	230.00	315.00	435.00
Price Band 5	230.00	315.00	435.00
Price Band 6	230.00	315.00	435.00

Legend Notes

On-Net: survivability from POP SWC to End User

Off-Net: survivability from POP SWC to a wire center as close to EU as existing facilities allow with completion of service to EU on available facilities.

Service to Hub: survivability from POP SWC to a wire center as close to DS1 Hub as existing facilities allow with completion of service to the Hub on available facilities.

Service availability limited. Refer to # footnote on Page 7-106.

© 2022 Frontier Communications Parent, Inc. All rights reserved

7. Special Access Service (Cont'd

7.5 Rates and Charges (Cont'd)

7.5.22 Dedicated SONET Shared Assurance Network# (Cont'd)

(B) **DSSAN Transport Channels** (Cont'd**)**
-from the POP SWC

1) DS1 Transport (Cont'd)

	Mileage Bands		
	0–3 Miles	4-20 Miles	20+ Miles
Premium Off-Net			
N-MSA	$240.00	$330.00	$475.00
Price Band 4	240.00	330.00	475.00
Price Band 5	240.00	330.00	475.00
Price Band 6	240.00	330.00	475.00
Basic On-Net to Hub			
N-MSA	70.00	155.00	275.00
Price Band 4	70.00	155.00	275.00
Price Band 5	70.00	155.00	275.00
Price Band 6	70.00	155.00	275.00
Premium On-Net to Hub			
N-MSA	80.00	175.00	300.00
Price Band 4	80.00	175.00	300.00
Price Band 5	80.00	175.00	300.00
Price Band 6	80.00	175.00	300.00

Legend Notes

On-Net: survivability from POP SWC to End User

Off-Net: survivability from POP SWC to a wire center as close to EU as existing facilities allow with completion of service to EU on available facilities.

Service to Hub: survivability from POP SWC to a wire center as close to DS1 Hub as existing facilities allow with completion of service to the Hub on available facilities.

Service availability limited. Refer to # footnote on Page 7-106.

© 2022 Frontier Communications Parent, Inc. All rights reserved

7. Special Access Service (Cont'd

7.5 Rates and Charges (Cont'd)

7.5.22 Dedicated SONET Shared Assurance Network# (Cont'd)

(B) **DSSAN Transport Channels** (Cont'd)
-from the POP SWC

	Mileage Bands		
	0–3 Miles	4-20 Miles	20+ Miles
2) DS3 Transport			
Basic On-Net			
N-MSA	$2,000.00	$2,900.00	$4,400.00
Price Band 4	2,000.00	2,900.00	4,400.00
Price Band 5	2,000.00	2,900.00	4,400.00
Price Band 6	2,000.00	2,900.00	4,400.00
Premium On-Net			
N-MSA	2,500.00	3,700.00	5,500.00
Price Band 4	2,500.00	3,700.00	5,500.00
Price Band 5	2,500.00	3,700.00	5,500.00
Price Band 6	2,500.00	3,700.00	5,500.00
Basic Off-Net			
N-MSA	2,500.00	3,355.00	4,500.00
Price Band 4	2,500.00	3,355.00	4,500.00
Price Band 5	2,500.00	3,355.00	4,500.00
Price Band 6	2,500.00	3,355.00	4,500.00
Premium Off-Net			
N-MSA	2,700.00	4,100.00	5,800.00
Price Band 4	2,700.00	4,100.00	5,800.00
Price Band 5	2,700.00	4,100.00	5,800.00
Price Band 6	2,700.00	4,100.00	5,800.00

Legend Notes

On-Net: survivability from POP SWC to End User

Off-Net: survivability from POP SWC to a wire center as close to EU as existing facilities allow with completion of service to EU on available facilities.

Service to Hub: survivability from POP SWC to a wire center as close to DS1 Hub as existing facilities allow with completion of service to the Hub on available facilities.

Service availability limited. Refer to # footnote on Page 7-106.

© 2022 Frontier Communications Parent, Inc. All rights reserved

7. Special Access Service (Cont'd

7.5 Rates and Charges (Cont'd)

7.5.22 Dedicated SONET Shared Assurance Network# (Cont'd)

(B) **DSSAN Transport Channels** (Cont'd)
-from the POP SWC

	Mileage Bands		
	0–3 Miles	4-20 Miles	20+ Miles
3) OC3/OC3c Transport			
Basic On-Net 2F			
N-MSA	$5,400.00	$7,600.00	$10,000.00
Price Band 4	5,400.00	7,600.00	10,000.00
Price Band 5	5,400.00	7,600.00	10,000.00
Price Band 6	5,400.00	7,600.00	10,000.00
Basic On-Net 4F			
N-MSA	5,600.00	7,800.00	10,200.00
Price Band 4	5,600.00	7,800.00	10,200.00
Price Band 5	5,600.00	7,800.00	10,200.00
Price Band 6	5,600.00	7,800.00	10,200.00
Basic Off-Net 2F			
N-MSA	5,100.00	7,300.00	9,800.00
Price Band 4	5,100.00	7,300.00	9,800.00
Price Band 5	5,100.00	7,300.00	9,800.00
Price Band 6	5,100.00	7,300.00	9,800.00
Basic Off-Net 4F			
N-MSA	5,300.00	7,500.00	9,900.00
Price Band 4	5,300.00	7,500.00	9,900.00
Price Band 5	5,300.00	7,500.00	9,900.00
Price Band 6	5,300.00	7,500.00	9,900.00

Legend Notes

On-Net: survivability from POP SWC to End User

Off-Net: survivability from POP SWC to a wire center as close to EU as existing facilities allow with completion of service to EU on available facilities.

Service to Hub: survivability from POP SWC to a wire center as close to DS1 Hub as existing facilities allow with completion of service to the Hub on available facilities.

Service availability limited. Refer to # footnote on Page 7-106.

© 2022 Frontier Communications Parent, Inc. All rights reserved

7. Special Access Service (Cont'd)

7.5 Rates and Charges (Cont'd)

7.5.23 LAN Extension Service##

1. Channel Termination

		Monthly Rate	Nonrecurring Charge
a. Three-year Plan			
	10 Mbps		
N-MSA	$975.00	$1,300.00	
Price Band 4	975.00	1,300.00	
	Price Band 5	975.00	1,300.00
	Price Band 6	975.00	1,300.00
	16 Mbps#		
N-MSA	1,175.00	1,300.00	
	Price Band 4	1,175.00	1,300.00
	Price Band 5	1,175.00	1,300.00
	Price Band 6	1,175.00	1,300.00
	100 Mbps		
N-MSA	1,725.00	1,300.00	
	Price Band 4	1,725.00	1,300.00
	Price Band 5	1,725.00	1,300.00
	Price Band 6	1,725.00	1,300.00
	1 Gbps		
N-MSA	2,425.00	1,300.00	
	Price Band 4	2,425.00	1,300.00
	Price Band 5	2,425.00	1,300.00
	Price Band 6	2,425.00	1,300.00
	1Gbps (Extended Distance Access)		
N-MSA	2,825.00	1,300.00	
	Price Band 4	2,825.00	1,300.00
	Price Band 5	2,825.00	1,300.00
	Price Band 6	2,825.00	1,300.00

Service availability limited. Refer to # footnote on Page 7-70.

Services is limited to existing customers of record as of February 11, 2003. Customers who are already subscribing to LES with a 16MBPS Token Ring interface as of February 11, 2003, may continue with the service as described in Section 7.2.11(A) preceding.

© 2022 Frontier Communications Parent, Inc. All rights reserved

7. Special Access Service (Cont'd)

7.5 Rates and Charges (Cont'd)

7.5.23 LAN Extension Service## (Cont'd)

1. **Channel Termination** (Cont'd)

	Monthly Rate	Nonrecurring Charge
b. Five-year Plan		
10 Mbps		
N-MSA	$730.00	$1,300.00
Price Band 4	730.00	1,300.00
Price Band 5	730.00	1,300.00
Price Band 6	730.00	1,300.00
16 Mbps#		
N-MSA	975.00	1,300.00
Price Band 4	975.00	1,300.00
Price Band 5	975.00	1,300.00
Price Band 6	975.00	1,300.00
100 Mbps		
N-MSA	1,475.00	1,300.00
Price Band 4	1,475.00	1,300.00
Price Band 5	1,475.00	1,300.00
Price Band 6	1,475.00	1,300.00
1 Gbps TYTD5		
N-MSA	2,175.00	1,300.00
Price Band 4	2,175.00	1,300.00
Price Band 5	2,175.00	1,300.00
Price Band 6	2,175.00	1,300.00
1Gbps (Extended Distance Access)		
N-MSA	2,575.00	1,300.00
Price Band 4	2,575.00	1,300.00
Price Band 5	2,575.00	1,300.00
Price Band 6	2,575.00	1,300.00

Service availability limited. Refer to # footnote on Page 7-70.

Services is limited to existing customers of record as of February 11, 2003. Customers who are already subscribing to LES with a 16MBPS Token Ring interface as of February 11, 2003, may continue with the service as described in Section 7.2.11(A) preceding.

© 2022 Frontier Communications Parent, Inc. All rights reserved

7. Special Access Service (Cont'd)

7.5 Rates and Charges (Cont'd)

7.5.23 LAN Extension Service# (Cont'd)

© 2022 Frontier Communications Parent, Inc. All rights reserved

Special Access Service (Cont'd)
7.5 Rates and Charges (Cont'd)
7.5.24 Dedicated SONET Optical Transport Service#
(A) Nodes
(1) Monthly Rates, Per Node

Node Type	3-Year Term	Category I 5-Year Term	7-Year Term
4 Channel Nodes			
Primary or Expansion Customer Premises Node			
N-MSA	$7,500.00	$3,900.00	$3,480.00
Price Band 4	7,500.00	3,900.00	3,480.00
Price Band 5	7,500.00	3,900.00	3,480.00
Price Band 6	7,500.00	3,900.00	3,480.00
Primary or Expansion Central Office Node			
N-MSA	7,500.00	3,900.00	3,480.00
Price Band 4	7,500.00	3,900.00	3,480.00
Price Band 5	7,500.00	3,900.00	3,480.00
Price Band 6	7,500.00	3,900.00	3,480.00
16 Channel Nodes			
Primary Customer Premises Node			
N-MSA	12,500.00	6,500.00	5,800.00
Price Band 4	12,500.00	6,500.00	5,800.00
Price Band 5	12,500.00	6,500.00	5,800.00
Price Band 6	12,500.00	6,500.00	5,800.00
Primary Central Office Node			
N-MSA	12,500.00	6,500.00	5,800.00
Price Band 4	12,500.00	6,500.00	5,800.00
Price Band 5	12,500.00	6,500.00	5,800.00
Price Band 6	12,500.00	6,500.00	5,800.00
Expansion Customer Premises Node			
N-MSA	12,500.00	6,500.00	5,800.00
Price Band 4	12,500.00	6,500.00	5,800.00
Price Band 5	12,500.00	6,500.00	5,800.00
Price Band 6	12,500.00	6,500.00	5,800.00
Expansion Central Office Node			
N-MSA	12,500.00	6,500.00	5,800.00
Price Band 4	12,500.00	6,500.00	5,800.00
Price Band 5	12,500.00	6,500.00	5,800.00
Price Band 6	12,500.00	6,500.00	5,800.00

Service availability limited. Refer to # footnote on Page 7-117.

© 2022 Frontier Communications Parent, Inc. All rights reserved

7. Special Access Service (Cont'd)
7.5 Rates and Charges (Cont'd)
7.5.24 Dedicated SONET Optical Transport Service# (Cont'd)
(A) Nodes (Cont'd)
(1) Monthly Rates, Per Node (Cont'd)

Node Type	3-Year Term	Category II 5-Year Term	7-Year Term
4 Channel Nodes			
Primary or Expansion Customer Premises Node			
N-MSA	$6,530.00	$ 4,900.00	$4,850.00
Price Band 4	6,530.00	4,900.00	4,850.00
Price Band 5	6,530.00	4,900.00	4,850.00
Price Band 6	6,530.00	4,900.00	4,850.00
Primary or Expansion Central Office Node			
N-MSA	6,530.00	4,900.00	4,850.00
Price Band 4	6,530.00	4,900.00	4,850.00
Price Band 5	6,530.00	4,900.00	4,850.00
Price Band 6	6,530.00	4,900.00	4,850.00
16 Channel Nodes			
Primary Customer Premises Node			
N-MSA	8,270.00	6,200.00	6,100.00
Price Band 4	8,270.00	6,200.00	6,100.00
Price Band 5	8,270.00	6,200.00	6,100.00
Price Band 6	8,270.00	6,200.00	6,100.00
Primary Central Office Node			
N-MSA	8,270.00	6,200.00	6,100.00
Price Band 4	8,270.00	6,200.00	6,100.00
Price Band 5	8,270.00	6,200.00	6,100.00
Price Band 6	8,270.00	6,200.00	6,100.00
Expansion Customer Premises Node			
N-MSA	8,270.00	6,200.00	6,100.00
Price Band 4	8,270.00	6,200.00	6,100.00
Price Band 5	8,270.00	6,200.00	6,100.00
Price Band 6	8,270.00	6,200.00	6,100.00
Expansion Central Office Node			
N-MSA	8,270.00	6,200.00	6,100.00
Price Band 4	8,270.00	6,200.00	6,100.00
Price Band 5	8,270.00	6,200.00	6,100.00
Price Band 6	8,270.00	6,200.00	6,100.00

Service availability limited. Refer to # footnote on Page 7-117.

© 2022 Frontier Communications Parent, Inc. All rights reserved

7. Special Access Service (Cont'd)
7.5 Rates and Charges (Cont'd)
7.5.24 Dedicated SONET Optical Transport Service# (Cont'd)
(A) Nodes (Cont'd)
(2) Initial Nonrecurring Charge (Cont'd)

Node Type	3-Year Term	5-Year Term	7-Year Term
		Category I	
4 Channel Nodes			
Primary or Expansion Customer Premises Node			
N-MSA	$1.00	$1.00	$1.00
Price Band 4	1.00	1.00	1.00
Price Band 5	1.00	1.00	1.00
Price Band 6	1.00	1.00	1.00
Primary or Expansion Central Office Node			
N-MSA	1.00	1.00	1.00
Price Band 4	1.00	1.00	1.00
Price Band 5	1.00	1.00	1.00
Price Band 6	1.00	1.00	1.00
16 Channel Nodes			
Primary Customer Premises Node			
N-MSA	1.00	1.00	1.00
Price Band 4	1.00	1.00	1.00
Price Band 5	1.00	1.00	1.00
Price Band 6	1.00	1.00	1.00
Primary Central Office Node			
N-MSA	1.00	1.00	1.00
Price Band 4	1.00	1.00	1.00
Price Band 5	1.00	1.00	1.00
Price Band 6	1.00	1.00	1.00
Expansion Customer Premises Node			
N-MSA	1.00	1.00	1.00
Price Band 4	1.00	1.00	1.00
Price Band 5	1.00	1.00	1.00
Price Band 6	1.00	1.00	1.00
Expansion Central Office Node			
N-MSA	1.00	1.00	1.00
Price Band 4	1.00	1.00	1.00
Price Band 5	1.00	1.00	1.00
Price Band 6	1.00	1.00	1.00

Service availability limited. Refer to # footnote on Page 7-117.

© 2022 Frontier Communications Parent, Inc. All rights reserved

7. Special Access Service (Cont'd)
7.5 Rates and Charges (Cont'd)
7.5.24 Dedicated SONET Optical Transport Service# (Cont'd)
(A) Nodes (Cont'd)
(2) Initial Nonrecurring Charge (Cont'd)

Node Type	3-Year Term	5-Year Term	7-Year Term
		Category II	
4 Channel Nodes			
Primary or Expansion Customer Premises Node			
N-MSA	$1.00	$1.00	$1.00
Price Band 4	1.00	1.00	1.00
Price Band 5	1.00	1.00	1.00
Price Band 6	1.00	1.00	1.00
Primary or Expansion Central Office Node			
N-MSA	1.00	1.00	1.00
Price Band 4	1.00	1.00	1.00
Price Band 5	1.00	1.00	1.00
Price Band 6	1.00	1.00	1.00
16 Channel Nodes			
Primary Customer Premises Node			
N-MSA	1.00	1.00	1.00
Price Band 4	1.00	1.00	1.00
Price Band 5	1.00	1.00	1.00
Price Band 6	1.00	1.00	1.00
Primary Central Office Node			
N-MSA	1.00	1.00	1.00
Price Band 4	1.00	1.00	1.00
Price Band 5	1.00	1.00	1.00
Price Band 6	1.00	1.00	1.00
Expansion Customer Premises Node			
N-MSA	1.00	1.00	1.00
Price Band 4	1.00	1.00	1.00
Price Band 5	1.00	1.00	1.00
Price Band 6	1.00	1.00	1.00
Expansion Central Office Node			
N-MSA	1.00	1.00	1.00
Price Band 4	1.00	1.00	1.00
Price Band 5	1.00	1.00	1.00
Price Band 6	1.00	1.00	1.00

Service availability limited. Refer to # footnote on Page 7-117.

© 2022 Frontier Communications Parent, Inc. All rights reserved

7. Special Access Service (Cont'd)

7.5 Rates and Charges (Cont'd)

7.5.24 Dedicated SONET Optical Transport Service# (Cont'd)

(A) Nodes (Cont'd)

(3) Nonrecurring Charges

	Category I
Subsequent Installation, Per 4 Channel or 16 Channel Primary or Expansion Node	
N-MSA	$1,600.00
Price Band 4	1,600.00
Price Band 5	1,600.00
Price Band 6	1,600.00
Upgrade to 16 Channel Primary or Expansion Node, Per 4 Channel Primary or Expansion Node Upgraded	
N-MSA	20,000.00
Price Band 4	20,000.00
Price Band 5	20,000.00
Price Band 6	20,000.00

	Category II
Subsequent Installation, Per 4 Channel or 16 Channel Primary or Expansion Node	
N-MSA	$1,600.00
Price Band 4	1,600.00
Price Band 5	1,600.00
Price Band 6	1,600.00
Upgrade to 16 Channel Primary or Expansion Node, Per 4 Channel Primary or Expansion Node Upgraded	
N-MSA	20,000.00
Price Band 4	20,000.00
Price Band 5	20,000.00
Price Band 6	20,000.00

Service availability limited. Refer to # footnote on Page 7-117.

© 2022 Frontier Communications Parent, Inc. All rights reserved

7. Special Access Service (Cont'd)

7.5 Rates and Charges (Cont'd)

7.5.24 Dedicated SONET Optical Transport Service# (Cont'd)

(B) Ring Mileage, Per Mile

Category I

	3-Year Term	5-Year Term	7-Year Term
Miles 1 - 20			
N-MSA	$1,100.00	$639.00	$575.00
Price Band 4	1,100.00	639.00	575.00
Price Band 5	1,100.00	639.00	575.00
Price Band 6	1,100.00	639.00	575.00
Miles 21 and Over			
N-MSA	520.00	300.00	270.00
Price Band 4	520.00	300.00	270.00
Price Band 5	520.00	300.00	270.00
Price Band 6	520.00	300.00	270.00

Category II

	3-Year Term	5-Year Term	7-Year Term
Miles 1 - 20			
N-MSA	310.00	230.00	225.00
Price Band 4	310.00	230.00	225.00
Price Band 5	310.00	230.00	225.00
Price Band 6	310.00	230.00	225.00
Miles 21 and Over			
N-MSA	310.00	230.00	225.00
Price Band 4	310.00	230.00	225.00
Price Band 5	310.00	230.00	225.00
Price Band 6	310.00	230.00	225.00

Service availability limited. Refer to # footnote on Page 7-117.

© 2022 Frontier Communications Parent, Inc. All rights reserved

7. Special Access Service (Cont'd)

7.5 Rates and Charges (Cont'd)

7.5.24 Dedicated SONET Optical Transport Service# (Cont'd)

(C) Network Optimization

(1) Monthly Rate,
Per Amplification Device

	Category I		
	3-Year Term	5-Year Term	7-Year Term
At Node			
N-MSA	$5,000.00	$2,650.00	$2,400.00
Price Band 4	5,000.00	2,650.00	2,400.00
Price Band 5	5,000.00	2,650.00	2,400.00
Price Band 6	5,000.00	2,650.00	2,400.00
Mid-Span			
N-MSA	5,400.00	2,800.00	2,600.00
Price Band 4	5,400.00	2,800.00	2,600.00
Price Band 5	5,400.00	2,800.00	2,600.00
Price Band 6	5,400.00	2,800.00	2,600.00

	Category II		
	3-Year Term	5-Year Term	7-Year Term
Mid-Span			
N-MSA	5,130.00	3,850.00	3,825.00
Price Band 4	5,130.00	3,850.00	3,825.00
Price Band 5	5,130.00	3,850.00	3,825.00
Price Band 6	5,130.00	3,850.00	3,825.00

Service availability limited. Refer to # footnote on Page 7-117.

© 2022 Frontier Communications Parent, Inc. All rights reserved

7. Special Access Service (Cont'd)

7.5 Rates and Charges (Cont'd)

7.5.24 Dedicated SONET Optical Transport Service# (Cont'd)

(C) Network Optimization (Cont'd)

(2) Initial Nonrecurring Charges

	Category I		
	3-Year Term	5-Year Term	7-Year Term
At Node			
N-MSA	$1.00	$1.00	$1.00
Price Band 4	1.00	1.00	1.00
Price Band 5	1.00	1.00	1.00
Price Band 6	1.00	1.00	1.00
Mid-Span			
N-MSA	1.00	1.00	1.00
Price Band 4	1.00	1.00	1.00
Price Band 5	1.00	1.00	1.00
Price Band 6	1.00	1.00	1.00

	Category II		
	3-Year Term	5-Year Term	7-Year Term
Mid-Span			
N-MSA	1.00	1.00	1.00
Price Band 4	1.00	1.00	1.00
Price Band 5	1.00	1.00	1.00
Price Band 6	1.00	1.00	1.00

Service availability limited. Refer to # footnote on Page 7-117.

© 2022 Frontier Communications Parent, Inc. All rights reserved

7. Special Access Service (Cont'd)

7.5 Rates and Charges (Cont'd)

7.5.24 Dedicated SONET Optical Transport Service# (Cont'd)

(C) Network Optimization (Cont'd)

(3) Nonrecurring Charges,
Subsequent Installation,
Per Amplification Device

	Category I
N-MSA	$1,600.00
Price Band 4	1,600.00
Price Band 5	1,600.00
Price Band 6	1,600.00

	Category II
N-MSA	1,600.00
Price Band 4	1,600.00
Price Band 5	1,600.00
Price Band 6	1,600.00

Partial Ring High Speed (Pass-through) Interface,
Per Interface

(1) Monthly Rates

Category I

3-Year Term	5-Year Term	7-Year Term
$5,400.00	$2,800.00	$2,600.00

Category II

3-Year Term	5-Year Term	7-Year Term
5,130.00	3,850.00	3,825.00

Service availability limited. Refer to # footnote on Page 7-117.

© 2022 Frontier Communications Parent, Inc. All rights reserved

7. Special Access Service (Cont'd)

7.5 Rates and Charges (Cont'd)

7.5.24 Dedicated SONET Optical Transport Service# (Cont'd)

(E) Point-to-Point Optical Transport Channels

(1) Monthly Rates

		Category I	
Interface Type	3-Year Term	5-Year Term	7-Year Term
Unprotected SONET OC3/OC3c			
N-MSA	$ 850.00	$ 450.00	$ 400.00
Price Band 4	850.00	450.00	400.00
Price Band 5	850.00	450.00	400.00
Price Band 6	850.00	450.00	400.00
Unprotected SONET OC12/OC12c			
N-MSA	1,400.00	725.00	650.00
Price Band 4	1,400.00	725.00	650.00
Price Band 5	1,400.00	725.00	650.00
Price Band 6	1,400.00	725.00	650.00
Unprotected SONET OC48/OC48c			
N-MSA	3,450.00	1,870.00	1,625.00
Price Band 4	3,450.00	1,870.00	1,625.00
Price Band 5	3,450.00	1,870.00	1,625.00
Price Band 6	3,450.00	1,870.00	1,625.00
Unprotected SONET OC192/OC192c			
N-MSA	5,800.00	4,100.00	3,250.00
Price Band 4	5,800.00	4,100.00	3,250.00
Price Band 5	5,800.00	4,100.00	3,250.00
Price Band 6	5,800.00	4,100.00	3,250.00
Unprotected 1 Gbps FICON			
N-MSA	3,450.00	1,800.00	1,600.00
Price Band 4	3,450.00	1,800.00	1,600.00
Price Band 5	3,450.00	1,800.00	1,600.00
Price Band 6	3,450.00	1,800.00	1,600.00
Unprotected 2Gbps FICON			
N-MSA	3,450.00	1,900.00	1,600.00
Price Band 4	3,450.00	1,900.00	1,600.00
Price Band 5	3,450.00	1,900.00	1,600.00
Price Band 6	3,450.00	1,900.00	1,600.00

Service availability limited. Refer to # footnote on Page 7-117.

© 2022 Frontier Communications Parent, Inc. All rights reserved

7. Special Access Service (Cont'd)

7.5 Rates and Charges (Cont'd)

7.5.24 Dedicated SONET Optical Transport Service# (Cont'd)

(E) Point-to-Point Optical Transport Channels (Cont'd)

(1) Monthly Rates (Cont'd)

	Category I		
Interface Type	3-Year Term	5-Year Term	7-Year Term
Unprotected 1 Gbps Fibre Channel			
N-MSA	$3,450.00	$1,800.00	$1,600.00
Price Band 4	3,450.00	1,800.00	1,600.00
Price Band 5	3,450.00	1,800.00	1,600.00
Price Band 6	3,450.00	1,800.00	1,600.00
Unprotected 2 Gbps Fibre Channel			
N-MSA	3,450.00	1,900.00	1,600.00
Price Band 4	3,450.00	1,900.00	1,600.00
Price Band 5	3,450.00	1,900.00	1,600.00
Price Band 6	3,450.00	1,900.00	1,600.00
Unprotected ETR/CLO			
N-MSA	$3,450.00	$1,800.00	$1,600.00
Price Band 4	3,450.00	1,800.00	1,600.00
Price Band 5	3,450.00	1,800.00	1,600.00
Price Band 6	3,450.00	1,800.00	1,600.00
Unprotected FDDI			
N-MSA	3,450.00	1,800.00	1,600.00
Price Band 4	3,450.00	1,800.00	1,600.00
Price Band 5	3,450.00	1,800.00	1,600.00
Price Band 6	3,450.00	1,800.00	1,600.00
Unprotected ISC			
N-MSA	3,450.00	1,800.00	1,600.00
Price Band 4	3,450.00	1,800.00	1,600.00
Price Band 5	3,450.00	1,800.00	1,600.00
Price Band 6	3,450.00	1,800.00	1,600.00
Unprotected ISC3			
N-MSA	3,450.00	1,900.00	1,600.00
Price Band 4	3,450.00	1,900.00	1,600.00
Price Band 5	3,450.00	1,900.00	1,600.00
Price Band 6	3,450.00	1,900.00	1,600.00

Service availability limited. Refer to # footnote on Page 7-117.

© 2022 Frontier Communications Parent, Inc. All rights reserved

7. Special Access Service (Cont'd)

7.5 Rates and Charges (Cont'd)

7.5.24 Dedicated SONET Optical Transport Service# (Cont'd)

(E) Point-to-Point Optical Transport Channels (Cont'd)

(1) Monthly Rates (Cont'd)

	Category I		
Interface Type	3-Year Term	5-Year Term	7-Year Term
Unprotected Fast Ethernet			
N-MSA	$3,450.00	$1,800.00	$1,600.00
Price Band 4	3,450.00	1,800.00	1,600.00
Price Band 5	3,450.00	1,800.00	1,600.00
Price Band 6	3,450.00	1,800.00	1,600.00
Unprotected Gigabit Ethernet			
N-MSA	3,450.00	1,800.00	1,600.00
Price Band 4	3,450.00	1,800.00	1,600.00
Price Band 5	3,450.00	1,800.00	1,600.00
Price Band 6	3,450.00	1,800.00	1,600.00
Unprotected 10 Gigabit Ethernet LAN-PHY/WAN-PHY			
N-MSA	5,800.00	4,100.00	3,250.00
Price Band 4	5,800.00	4,100.00	3,250.00
Price Band 5	5,800.00	4,100.00	3,250.00
Price Band 6	5,800.00	4,100.00	3,250.00
Unprotected D1 Video			
N-MSA	3,450.00	1,800.00	1,600.00
Price Band 4	3,450.00	1,800.00	1,600.00
Price Band 5	3,450.00	1,800.00	1,600.00
Price Band 6	3,450.00	1,800.00	1,600.00

Service availability limited. Refer to # footnote on Page 7-117.

© 2022 Frontier Communications Parent, Inc. All rights reserved

7. Special Access Service (Cont'd)

7.5 Rates and Charges (Cont'd)

7.5.24 Dedicated SONET Optical Transport Service# (Cont'd)

(E) Point-to-Point Optical Transport Channels (Cont'd)

(1) Monthly Rates (Cont'd)

		Category I	
Interface Type	3-Year Term	5-Year Term	7-Year Term
Unprotected Multi-Port Facility			
N-MSA	$4,700.00	$2,500.00	$2,200.00
Price Band 4	4,700.00	2,500.00	2,200.00
Price Band 5	4,700.00	2,500.00	2,200.00
Price Band 6	4,700.00	2,500.00	2,200.00
Unprotected Multi-Port Channel			
ESCON			
N-MSA	225.00	225.00	225.00
Price Band 4	225.00	225.00	225.00
Price Band 5	225.00	225.00	225.00
Price Band 6	225.00	225.00	225.00
Fibre Channel			
N-MSA	225.00	225.00	225.00
Price Band 4	225.00	225.00	225.00
Price Band 5	225.00	225.00	225.00
Price Band 6	225.00	225.00	225.00
FDDI			
N-MSA	225.00	225.00	225.00
Price Band 4	225.00	225.00	225.00
Price Band 5	225.00	225.00	225.00
Price Band 6	225.00	225.00	225.00
Fast Ethernet			
N-MSA	225.00	225.00	225.00
Price Band 4	225.00	225.00	225.00
Price Band 5	225.00	225.00	225.00
Price Band 6	225.00	225.00	225.00
D1 Video			
N-MSA	225.00	225.00	225.00
Price Band 4	225.00	225.00	225.00
Price Band 5	225.00	225.00	225.00
Price Band 6	225.00	225.00	225.00

Service availability limited. Refer to # footnote on Page 7-117.

© 2022 Frontier Communications Parent, Inc. All rights reserved

7. Special Access Service (Cont'd)

7.5 Rates and Charges (Cont'd)

7.5.24 Dedicated SONET Optical Transport Service# (Cont'd)

(E) Point-to-Point Optical Transport Channels (Cont'd)

(1) Monthly Rates (Cont'd)

		Category I	
Interface Type	3-Year Term	5-Year Term	7-Year Term
Protected SONET OC3/OC3c			
N-MSA	$1,400.00	$725.00	$650.00
Price Band 4	1,400.00	725.00	650.00
Price Band 5	1,400.00	725.00	650.00
Price Band 6	1,400.00	725.00	650.00
Protected SONET OC12/OC12c			
N-MSA	1,950.00	1,000.00	900.00
Price Band 4	1,950.00	1,000.00	900.00
Price Band 5	1,950.00	1,000.00	900.00
Price Band 6	1,950.00	1,000.00	900.00
Protected SONET OC48/OC48c			
N-MSA	4,100.00	2,150.00	1,925.00
Price Band 4	4,100.00	2,150.00	1,925.00
Price Band 5	4,100.00	2,150.00	1,925.00
Price Band 6	4,100.00	2,150.00	1,925.00
Protected SONET OC192/192c			
N-MSA	7,000.00	5,600.00	4,750.00
Price Band 4	7,000.00	5,600.00	4,750.00
Price Band 5	7,000.00	5,600.00	4,750.00
Price Band 6	7,000.00	5,600.00	4,750.00

Service availability limited. Refer to # footnote on Page 7-117.

© 2022 Frontier Communications Parent, Inc. All rights reserved

7. Special Access Service (Cont'd)

7.5 Rates and Charges (Cont'd)

7.5.24 Dedicated SONET Optical Transport Service# (Cont'd)

(E) Point-to-Point Optical Transport Channels (Cont'd)

(1) Monthly Rates (Cont'd)

	Category I		
Interface Type	3-Year Term	5-Year Term	7-Year Term
Protected 1 Gbps FICON			
N-MSA	$4,200.00	$2,200.00	$1,950.00
Price Band 4	4,200.00	2,200.00	1,950.00
Price Band 5	4,200.00	2,200.00	1,950.00
Price Band 6	4,200.00	2,200.00	1,950.00
Protected 2Gbps FICON			
N-MSA	4,200.00	2,300.00	1,950.00
Price Band 4	4,200.00	2,300.00	1,950.00
Price Band 5	4,200.00	2,300.00	1,950.00
Price Band 6	4,200.00	2,300.00	1,950.00
Protected 1 Gbps Fibre Channel			
N-MSA	4,200.00	2,200.00	1,950.00
Price Band 4	4,200.00	2,200.00	1,950.00
Price Band 5	4,200.00	2,200.00	1,950.00
Price Band 6	4,200.00	2,200.00	1,950.00
Protected 2G Fibre Channel			
N-MSA	4,200.00	2,300.00	1,950.00
Price Band 4	4,200.00	2,300.00	1,950.00
Price Band 5	4,200.00	2,300.00	1,950.00
Price Band 6	4,200.00	2,300.00	1,950.00
Protected FDDI			
N-MSA	4,200.00	2,200.00	1,950.00
Price Band 4	4,200.00	2,200.00	1,950.00
Price Band 5	4,200.00	2,200.00	1,950.00
Price Band 6	4,200.00	2,200.00	1,950.00

Service availability limited. Refer to # footnote on Page 7-117.

© 2022 Frontier Communications Parent, Inc. All rights reserved

7. Special Access Service (Cont'd)

7.5 Rates and Charges (Cont'd)

7.5.24 Dedicated SONET Optical Transport Service# (Cont'd)

(E) Point-to-Point Optical Transport Channels (Cont'd)

(1) Monthly Rates (Cont'd)

		Category I	
Interface Type	3-Year Term	5-Year Term	7-Year Term
Protected ISC			
N-MSA	$4,200.00	$2,200.00	$1,950.00
Price Band 4	4,200.00	2,200.00	1,950.00
Price Band 5	4,200.00	2,200.00	1,950.00
Price Band 6	4,200.00	2,200.00	1,950.00
Protected ISC3			
N-MSA	4,200.00	2,300.00	1,950.00
Price Band 4	4,200.00	2,300.00	1,950.00
Price Band 5	4,200.00	2,300.00	1,950.00
Price Band 6	4,200.00	2,300.00	1,950.00
Protected Fast Ethernet			
N-MSA	4,200.00	2,200.00	1,950.00
Price Band 4	4,200.00	2,200.00	1,950.00
Price Band 5	4,200.00	2,200.00	1,950.00
Price Band 6	4,200.00	2,200.00	1,950.00
Protected Gigabit Ethernet			
N-MSA	4,200.00	2,200.00	1,950.00
Price Band 4	4,200.00	2,200.00	1,950.00
Price Band 5	4,200.00	2,200.00	1,950.00
Price Band 6	4,200.00	2,200.00	1,950.00
Protected 10 Gigabit Ethernet LAN-PHY/WAN-PHY			
N-MSA	7,000.00	5,600.00	4,750.00
Price Band 4	7,000.00	5,600.00	4,750.00
Price Band 5	7,000.00	5,600.00	4,750.00
Price Band 6	7,000.00	5,600.00	4,750.00
Protected D1 Video			
N-MSA	4,200.00	2,200.00	1,950.00
Price Band 4	4,200.00	2,200.00	1,950.00
Price Band 5	4,200.00	2,200.00	1,950.00
Price Band 6	4,200.00	2,200.00	1,950.00

Service availability limited. Refer to # footnote on Page 7-117.

© 2022 Frontier Communications Parent, Inc. All rights reserved

7. Special Access Service (Cont'd)

7.5 Rates and Charges (Cont'd)

7.5.24 Dedicated SONET Optical Transport Service# (Cont'd)

(E) Point-to-Point Optical Transport Channels (Cont'd)

(1) Monthly Rates (Cont'd)

		Category I	
Interface Type	3-Year Term	5-Year Term	7-Year Term
Protected Multi-Port Facility			
N-MSA	$5,700.00	$3,000.00	$2,700.00
Price Band 4	5,700.00	3,000.00	2,700.00
Price Band 5	5,700.00	3,000.00	2,700.00
Price Band 6	5,700.00	3,000.00	2,700.00
Protected Multi-Port Channel			
ESCON			
N-MSA	225.00	225.00	225.00
Price Band 4	225.00	225.00	225.00
Price Band 5	225.00	225.00	225.00
Price Band 6	225.00	225.00	225.00
Fibre Channel			
N-MSA	225.00	225.00	225.00
Price Band 4	225.00	225.00	225.00
Price Band 5	225.00	225.00	225.00
Price Band 6	225.00	225.00	225.00
FDDI			
N-MSA	225.00	225.00	225.00
Price Band 4	225.00	225.00	225.00
Price Band 5	225.00	225.00	225.00
Price Band 6	225.00	225.00	225.00
Fast Ethernet			
N-MSA	225.00	225.00	225.00
Price Band 4	225.00	225.00	225.00
Price Band 5	225.00	225.00	225.00
Price Band 6	225.00	225.00	225.00
D1 Video			
N-MSA	225.00	225.00	225.00
Price Band 4	225.00	225.00	225.00
Price Band 5	225.00	225.00	225.00
Price Band 6	225.00	225.00	225.00

Service availability limited. Refer to # footnote on Page 7-117.

© 2022 Frontier Communications Parent, Inc. All rights reserved

7. Special Access Service (Cont'd)

7.5 Rates and Charges (Cont'd)

7.5.24 Dedicated SONET Optical Transport Service# (Cont'd)

(E) Point-to-Point Optical Transport Channels (Cont'd)

(1) Monthly Rates (Cont'd)

		Category II	
Interface Type	3-Year Term	5-Year Term	7-Year Term
Unprotected SONET OC3/OC3c			
N-MSA	$,270.00	$ 950.00	$ 850.00
Price Band 4	1,270.00	950.00	850.00
Price Band 5	1,270.00	950.00	850.00
Price Band 6	1,270.00	950.00	850.00
Unprotected SONET OC12/OC12c			
N-MSA	1,400.00	1,050.00	950.00
Price Band 4	1,400.00	1,050.00	950.00
Price Band 5	1,400.00	1,050.00	950.00
Price Band 6	1,400.00	1,050.00	950.00
Unprotected SONET OC48/OC48c			
N-MSA	1,870.00	1,400.00	1,300.00
Price Band 4	1,870.00	1,400.00	1,300.00
Price Band 5	1,870.00	1,400.00	1,300.00
Price Band 6	1,870.00	1,400.00	1,300.00
Unprotected SONET OC192/OC192c			
N-MSA	4,600.00	3,450.00	3,350.00
Price Band 4	4,600.00	3,450.00	3,350.00
Price Band 5	4,600.00	3,450.00	3,350.00
Price Band 6	4,600.00	3,450.00	3,350.00
Unprotected 1 Gbps FICON			
N-MSA	2,400.00	1,800.00	1,600.00
Price Band 4	2,400.00	1,800.00	1,600.00
Price Band 5	2,400.00	1,800.00	1,600.00
Price Band 6	2,400.00	1,800.00	1,600.00
Unprotected 2Gbps FICON			
N-MSA	2,400.00	1,800.00	1,600.00
Price Band 4	2,400.00	1,800.00	1,600.00
Price Band 5	2,400.00	1,800.00	1,600.00
Price Band 6	2,400.00	1,800.00	1,600.00

Service availability limited. Refer to # footnote on Page 7-117.

© 2022 Frontier Communications Parent, Inc. All rights reserved

7. Special Access Service (Cont'd)

7.5 Rates and Charges (Cont'd)

7.5.24 Dedicated SONET Optical Transport Service# (Cont'd)

(E) Point-to-Point Optical Transport Channels (Cont'd)

(1) Monthly Rates (Cont'd)

	Category II		
Interface Type	3-Year Term	5-Year Term	7-Year Term
Unprotected 1 Gbps Fibre Channel			
N-MSA	$2,400.00	$1,800.00	$1,600.00
Price Band 4	2,400.00	1,800.00	1,600.00
Price Band 5	2,400.00	1,800.00	1,600.00
Price Band 6	2,400.00	1,800.00	1,600.00
Unprotected 2 Gbps Fibre Channel			
N-MSA	2,400.00	1,800.00	1,600.00
Price Band 4	2,400.00	1,800.00	1,600.00
Price Band 5	2,400.00	1,800.00	1,600.00
Price Band 6	2,400.00	1,800.00	1,600.00
Unprotected ETR/CLO			
N-MSA	$2,400.00	$1,800.00	$1,600.00
Price Band 4	2,400.00	1,800.00	1,600.00
Price Band 5	2,400.00	1,800.00	1,600.00
Price Band 6	2,400.00	1,800.00	1,600.00
Unprotected FDDI			
N-MSA	2,400.00	1,800.00	1,600.00
Price Band 4	2,400.00	1,800.00	1,600.00
Price Band 5	2,400.00	1,800.00	1,600.00
Price Band 6	2,400.00	1,800.00	1,600.00
Unprotected ISC			
N-MSA	2,400.00	1,800.00	1,600.00
Price Band 4	2,400.00	1,800.00	1,600.00
Price Band 5	2,400.00	1,800.00	1,600.00
Price Band 6	2,400.00	1,800.00	1,600.00
Unprotected ISC3			
N-MSA	2,400.00	1,800.00	1,600.00
Price Band 4	2,400.00	1,800.00	1,600.00
Price Band 5	2,400.00	1,800.00	1,600.00
Price Band 6	2,400.00	1,800.00	1,600.00

Service availability limited. Refer to # footnote on Page 7-117.

© 2022 Frontier Communications Parent, Inc. All rights reserved

7. Special Access Service (Cont'd)

7.5 Rates and Charges (Cont'd)

7.5.24 Dedicated SONET Optical Transport Service# (Cont'd)

(E) Point-to-Point Optical Transport Channels (Cont'd)

(1) Monthly Rates (Cont'd)

	Category II		
Interface Type	3-Year Term	5-Year Term	7-Year Term
Unprotected Fast Ethernet			
N-MSA	$2,400.00	$1,800.00	$1,600.00
Price Band 4	2,400.00	1,800.00	1,600.00
Price Band 5	2,400.00	1,800.00	1,600.00
Price Band 6	2,400.00	1,800.00	1,600.00
Unprotected Gigabit Ethernet			
N-MSA	2,400.00	1,800.00	1,600.00
Price Band 4	2,400.00	1,800.00	1,600.00
Price Band 5	2,400.00	1,800.00	1,600.00
Price Band 6	2,400.00	1,800.00	1,600.00
Unprotected 10 Gigabit Ethernet LAN-PHY/WAN-PHY			
N-MSA	4,600.00	3,450.00	3,350.00
Price Band 4	4,600.00	3,450.00	3,350.00
Price Band 5	4,600.00	3,450.00	3,350.00
Price Band 6	4,600.00	3,450.00	3,350.00
Unprotected D1 Video			
N-MSA	2,400.00	1,800.00	1,600.00
Price Band 4	2,400.00	1,800.00	1,600.00
Price Band 5	2,400.00	1,800.00	1,600.00
Price Band 6	2,400.00	1,800.00	1,600.00

Service availability limited. Refer to # footnote on Page 7-117.

© 2022 Frontier Communications Parent, Inc. All rights reserved

7. Special Access Service (Cont'd)

7.5 Rates and Charges (Cont'd)

7.5.24 Dedicated SONET Optical Transport Service# (Cont'd)

(E) Point-to-Point Optical Transport Channels (Cont'd)

(1) Monthly Rates (Cont'd)

	Category II		
Interface Type	3-Year Term	5-Year Term	7-Year Term
Unprotected Multi-Port Facility			
N-MSA	$3,330.00	$2,500.00	$2,200.00
Price Band 4	3,330.00	2,500.00	2,200.00
Price Band 5	3,330.00	2,500.00	2,200.00
Price Band 6	3,330.00	2,500.00	2,200.00
Unprotected Multi-Port Channel			
ESCON			
N-MSA	225.00	225.00	225.00
Price Band 4	225.00	225.00	225.00
Price Band 5	225.00	225.00	225.00
Price Band 6	225.00	225.00	225.00
Fibre Channel			
N-MSA	225.00	225.00	225.00
Price Band 4	225.00	225.00	225.00
Price Band 5	225.00	225.00	225.00
Price Band 6	225.00	225.00	225.00
FDDI			
N-MSA	225.00	225.00	225.00
Price Band 4	225.00	225.00	225.00
Price Band 5	225.00	225.00	225.00
Price Band 6	225.00	225.00	225.00
Fast Ethernet			
N-MSA	225.00	225.00	225.00
Price Band 4	225.00	225.00	225.00
Price Band 5	225.00	225.00	225.00
Price Band 6	225.00	225.00	225.00
D1 Video			
N-MSA	225.00	225.00	225.00
Price Band 4	225.00	225.00	225.00
Price Band 5	225.00	225.00	225.00
Price Band 6	225.00	225.00	225.00

Service availability limited. Refer to # footnote on Page 7-117.

© 2022 Frontier Communications Parent, Inc. All rights reserved

7. Special Access Service (Cont'd)

7.5 Rates and Charges (Cont'd)

7.5.24 Dedicated SONET Optical Transport Service# (Cont'd)

(E) Point-to-Point Optical Transport Channels (Cont'd)

(1) Monthly Rates (Cont'd)

	Category II		
Interface Type	3-Year Term	5-Year Term	7-Year Term
Protected SONET OC3/OC3c			
N-MSA	$1,600.00	$1,200.00	$1,100.00
Price Band 4	1,600.00	1,200.00	1,100.00
Price Band 5	1,600.00	1,200.00	1,100.00
Price Band 6	1,600.00	1,200.00	1,100.00
Protected SONET OC12/OC12c			
N-MSA	1,730.00	1,300.00	1,200.00
Price Band 4	1,730.00	1,300.00	1,200.00
Price Band 5	1,730.00	1,300.00	1,200.00
Price Band 6	1,730.00	1,300.00	1,200.00
Protected SONET OC48/OC48c			
N-MSA	2,870.00	2,150.00	1,925.00
Price Band 4	2,870.00	2,150.00	1,925.00
Price Band 5	2,870.00	2,150.00	1,925.00
Price Band 6	2,870.00	2,150.00	1,925.00
Protected SONET OC192/192c			
N-MSA	7,470.00	5,600.00	4,750.00
Price Band 4	7,470.00	5,600.00	4,750.00
Price Band 5	7,470.00	5,600.00	4,750.00
Price Band 6	7,470.00	5,600.00	4,750.00

Service availability limited. Refer to # footnote on Page 7-117.

© 2022 Frontier Communications Parent, Inc. All rights reserved

7. Special Access Service (Cont'd)

7.5 Rates and Charges (Cont'd)

7.5.24 Dedicated SONET Optical Transport Service# (Cont'd)

(E) Point-to-Point Optical Transport Channels (Cont'd)

(1) Monthly Rates (Cont'd)

	Category II		
Interface Type	3-Year Term	5-Year Term	7-Year Term
Protected 1 Gbps FICON			
N-MSA	$2,930.00	$2,200.00	$1,950.00
Price Band 4	2,930.00	2,200.00	1,950.00
Price Band 5	2,930.00	2,200.00	1,950.00
Price Band 6	2,930.00	2,200.00	1,950.00
Protected 2Gbps FICON			
N-MSA	2,930.00	2,200.00	1,950.00
Price Band 4	2,930.00	2,200.00	1,950.00
Price Band 5	2,930.00	2,200.00	1,950.00
Price Band 6	2,930.00	2,200.00	1,950.00
Protected 1 Gbps Fibre Channel			
N-MSA	2,930.00	2,200.00	1,950.00
Price Band 4	2,930.00	2,200.00	1,950.00
Price Band 5	2,930.00	2,200.00	1,950.00
Price Band 6	2,930.00	2,200.00	1,950.00
Protected 2G Fibre Channel			
N-MSA	2,930.00	2,200.00	1,950.00
Price Band 4	2,930.00	2,200.00	1,950.00
Price Band 5	2,930.00	2,200.00	1,950.00
Price Band 6	2,930.00	2,200.00	1,950.00
Protected FDDI			
N-MSA	2,930.00	2,200.00	1,950.00
Price Band 4	2,930.00	2,200.00	1,950.00
Price Band 5	2,930.00	2,200.00	1,950.00
Price Band 6	2,930.00	2,200.00	1,950.00

Service availability limited. Refer to # footnote on Page 7-117.

© 2022 Frontier Communications Parent, Inc. All rights reserved

7. Special Access Service (Cont'd)

7.5 Rates and Charges (Cont'd)

7.5.24 Dedicated SONET Optical Transport Service# (Cont'd)

(E) Point-to-Point Optical Transport Channels (Cont'd)

(1) Monthly Rates (Cont'd)

	Category II		
Interface Type	3-Year Term	5-Year Term	7-Year Term
Protected ISC			
N-MSA	$2,930.00	$2,200.00	$1,950.00
Price Band 4	2,930.00	2,200.00	1,950.00
Price Band 5	2,930.00	2,200.00	1,950.00
Price Band 6	2,930.00	2,200.00	1,950.00
Protected ISC3			
N-MSA	2,930.00	2,200.00	1,950.00
Price Band 4	2,930.00	2,200.00	1,950.00
Price Band 5	2,930.00	2,200.00	1,950.00
Price Band 6	2,930.00	2,200.00	1,950.00
Protected Fast Ethernet			
N-MSA	2,930.00	2,200.00	1,950.00
Price Band 4	2,930.00	2,200.00	1,950.00
Price Band 5	2,930.00	2,200.00	1,950.00
Price Band 6	2,930.00	2,200.00	1,950.00
Protected Gigabit Ethernet			
N-MSA	2,930.00	2,200.00	1,950.00
Price Band 4	2,930.00	2,200.00	1,950.00
Price Band 5	2,930.00	2,200.00	1,950.00
Price Band 6	2,930.00	2,200.00	1,950.00
Protected 10 Gigabit Ethernet LAN-PHY/WAN-PHY			
N-MSA	7,470.00	5,600.00	4,750.00
Price Band 4	7,470.00	5,600.00	4,750.00
Price Band 5	7,470.00	5,600.00	4,750.00
Price Band 6	7,470.00	5,600.00	4,750.00
Protected D1 Video			
N-MSA	2,930.00	2,200.00	1,950.00
Price Band 4	2,930.00	2,200.00	1,950.00
Price Band 5	2,930.00	2,200.00	1,950.00
Price Band 6	2,930.00	2,200.00	1,950.00

Service availability limited. Refer to # footnote on Page 7-117.

© 2022 Frontier Communications Parent, Inc. All rights reserved

7. Special Access Service (Cont'd)

7.5 Rates and Charges (Cont'd)

7.5.24 Dedicated SONET Optical Transport Service# (Cont'd)

(E) Point-to-Point Optical Transport Channels (Cont'd)

(1) Monthly Rates (Cont'd)

		Category II*	
Interface Type	3-Year Term	5-Year Term	7-Year Term
Protected Multi-Port Facility			
N-MSA	$4,000.00	$3,000.00	$2,700.00
Price Band 4	4,000.00	3,000.00	2,700.00
Price Band 5	4,000.00	3,000.00	2,700.00
Price Band 6	4,000.00	3,000.00	2,700.00
Protected Multi-Port Channel			
ESCON			
N-MSA	225.00	225.00	225.00
Price Band 4	225.00	225.00	225.00
Price Band 5	225.00	225.00	225.00
Price Band 6	225.00	225.00	225.00
Fibre Channel			
N-MSA	225.00	225.00	225.00
Price Band 4	225.00	225.00	225.00
Price Band 5	225.00	225.00	225.00
Price Band 6	225.00	225.00	225.00
FDDI			
N-MSA	225.00	225.00	225.00
Price Band 4	225.00	225.00	225.00
Price Band 5	225.00	225.00	225.00
Price Band 6	225.00	225.00	225.00
Fast Ethernet			
N-MSA	225.00	225.00	225.00
Price Band 4	225.00	225.00	225.00
Price Band 5	225.00	225.00	225.00
Price Band 6	225.00	225.00	225.00
D1 Video			
N-MSA	225.00	225.00	225.00
Price Band 4	225.00	225.00	225.00
Price Band 5	225.00	225.00	225.00
Price Band 6	225.00	225.00	225.00

Service availability limited. Refer to # footnote on Page 7-117.

© 2022 Frontier Communications Parent, Inc. All rights reserved

7. Special Access Service (Cont'd)

7.5 Rates and Charges (Cont'd)

7.5.24 Dedicated SONET Optical Transport Service# (Cont'd)

(E) Point-to-Point Optical Transport Channels (Cont'd)

(2) Nonrecurring Charges

(a) Initial Installation Charges, Per Optical Transport Channel

Interface Type	Category I Nonrecurring Charges
Unprotected SONET OC3/OC3c	
N-MSA	$1.00
Price Band 4	1.00
Price Band 5	1.00
Price Band 6	1.00
Unprotected SONET OC12/OC12c	
N-MSA	1.00
Price Band 4	1.00
Price Band 5	1.00
Price Band 6	1.00
Unprotected SONET OC48/OC48c	
N-MSA	1.00
Price Band 4	1.00
Price Band 5	1.00
Price Band 6	1.00
Unprotected SONET OC192/OC192c	
N-MSA	1.00
Price Band 4	1.00
Price Band 5	1.00
Price Band 6	1.00
Unprotected 1 Gbps FICON	
N-MSA	1.00
Price Band 4	1.00
Price Band 5	1.00
Price Band 6	1.00
Unprotected 2 Gbps FICON	
N-MSA	1.00
Price Band 4	1.00
Price Band 5	1.00
Price Band 6	1.00

Service availability limited. Refer to # footnote on Page 7-117.

© 2022 Frontier Communications Parent, Inc. All rights reserved

7. Special Access Service (Cont'd)

7.5 Rates and Charges (Cont'd)

7.5.24 Dedicated SONET Optical Transport Service# (Cont'd)

(E) Point-to-Point Optical Transport Channels (Cont'd)

(2) Nonrecurring Charges (Cont'd)

(a) Initial Installation Charges, Per Optical Transport Channel (Cont'd)

Interface Type	Category I Nonrecurring Charges
Unprotected 1 Gbps Fibre Channel	
N-MSA	$1.00
Price Band 4	1.00
Price Band 5	1.00
Price Band 6	1.00
Unprotected 2G Fibre Channel	
N-MSA	1.00
Price Band 4	1.00
Price Band 5	1.00
Price Band 6	1.00
Unprotected ETR/CLO	
N-MSA	1.00
Price Band 4	1.00
Price Band 5	1.00
Price Band 6	1.00
Unprotected FDDI	
N-MSA	1.00
Price Band 4	1.00
Price Band 5	1.00
Price Band 6	1.00
Unprotected ISC	
N-MSA	1.00
Price Band 4	1.00
Price Band 5	1.00
Price Band 6	1.00

Service availability limited. Refer to # footnote on Page 7-117.

© 2022 Frontier Communications Parent, Inc. All rights reserved

7. Special Access Service (Cont'd)

7.5 Rates and Charges (Cont'd)

7.5.24 Dedicated SONET Optical Transport Service# (Cont'd)

(E) Point-to-Point Optical Transport Channels (Cont'd)

(2) Nonrecurring Charges (Cont'd)

(a) Initial Installation Charges, Per Optical Transport Channel (Cont'd)

Interface Type	Category I Nonrecurring Charges
Unprotected ISC3	
N-MSA	$1.00
Price Band 4	1.00
Price Band 5	1.00
Price Band 6	1.00
Unprotected Fast Ethernet	
N-MSA	1.00
Price Band 4	1.00
Price Band 5	1.00
Price Band 6	1.00
Unprotected Gigabit Ethernet	
N-MSA	1.00
Price Band 4	1.00
Price Band 5	1.00
Price Band 6	1.00
Unprotected 10 Gigabit Ethernet LAN-PHY/WAN-PHY	
N-MSA	1.00
Price Band 4	1.00
Price Band 5	1.00
Price Band 6	1.00
Unprotected D1 Video	
N-MSA	1.00
Price Band 4	1.00
Price Band 5	1.00
Price Band 6	1.00

Service availability limited. Refer to # footnote on Page 7-117.

© 2022 Frontier Communications Parent, Inc. All rights reserved

7. Special Access Service (Cont'd)

7.5 Rates and Charges (Cont'd)

7.5.24 Dedicated SONET Optical Transport Service# (Cont'd)

(E) Point-to-Point Optical Transport Channels (Cont'd)

(2) Nonrecurring Charges (Cont'd)

(a) Initial Installation Charges, Per Optical Transport Channel (Cont'd)

Interface Type	Category I Nonrecurring Charges
Unprotected Multi-Port Facility	
N-MSA	$1.00
Price Band 4	1.00
Price Band 5	1.00
Price Band 6	1.00
Unprotected Multi-Port Channel	
ESCON	
N-MSA	1.00
Price Band 4	1.00
Price Band 5	1.00
Price Band 6	1.00
Fibre Channel	
N-MSA	1.00
Price Band 4	1.00
Price Band 5	1.00
Price Band 6	1.00
FDDI	
N-MSA	1.00
Price Band 4	1.00
Price Band 5	1.00
Price Band 6	1.00
Fast Ethernet	
N-MSA	1.00
Price Band 4	1.00
Price Band 5	1.00
Price Band 6	1.00
D1 Video	
N-MSA	1.00
Price Band 4	1.00
Price Band 5	1.00
Price Band 6	1.00

Service availability limited. Refer to # footnote on Page 7-117.

© 2022 Frontier Communications Parent, Inc. All rights reserved

7. Special Access Service (Cont'd)

7.5 Rates and Charges (Cont'd)

7.5.24 Dedicated SONET Optical Transport Service# (Cont'd)

(E) Point-to-Point Optical Transport Channels (Cont'd)

(2) Nonrecurring Charges (Cont'd)

(a) Initial Installation Charges, Per Optical Transport Channel (Cont'd)

Interface Type	Category I Nonrecurring Charges
Protected SONET OC3/OC3c	
N-MSA	$1.00
Price Band 4	1.00
Price Band 5	1.00
Price Band 6	1.00
Protected OC12/OC12c	
N-MSA	1.00
Price Band 4	1.00
Price Band 5	1.00
Price Band 6	1.00
Protected OC48/OC48c	
N-MSA	1.00
Price Band 4	1.00
Price Band 5	1.00
Price Band 6	1.00
Protected OC192/OC192c	
N-MSA	1.00
Price Band 4	1.00
Price Band 5	1.00
Price Band 6	1.00

Service availability limited. Refer to # footnote on Page 7-117.

© 2022 Frontier Communications Parent, Inc. All rights reserved

7. Special Access Service (Cont'd)

7.5 Rates and Charges (Cont'd)

7.5.24 Dedicated SONET Optical Transport Service# (Cont'd)

(E) Point-to-Point Optical Transport Channels (Cont'd)

(2) Nonrecurring Charges (Cont'd)

(a) Initial Installation Charges, Per Optical Transport Channel (Cont'd)

Interface Type	Category I Nonrecurring Charges
Protected 1 Gbps FICON	
N-MSA	$1.00
Price Band 4	1.00
Price Band 5	1.00
Price Band 6	1.00
Protected 2 Gbps FICON	
N-MSA	1.00
Price Band 4	1.00
Price Band 5	1.00
Price Band 6	1.00
Protected 1 Gbps Fibre Channel	
N-MSA	1.00
Price Band 4	1.00
Price Band 5	1.00
Price Band 6	1.00
Protected 2 Gbps Fibre Channel	
N-MSA	1.00
Price Band 4	1.00
Price Band 5	1.00
Price Band 6	1.00
Protected FDDI	
N-MSA	1.00
Price Band 4	1.00
Price Band 5	1.00
Price Band 6	1.00

Service availability limited. Refer to # footnote on Page 7-117.

© 2022 Frontier Communications Parent, Inc. All rights reserved

7. Special Access Service (Cont'd)

7.5 Rates and Charges (Cont'd)

7.5.24 Dedicated SONET Optical Transport Service# (Cont'd)

(E) Point-to-Point Optical Transport Channels (Cont'd)

(2) Nonrecurring Charges (Cont'd)

(a) Initial Installation Charges, Per Optical Transport Channel (Cont'd)

Interface Type	Category I Nonrecurring Charges
Protected 1 Gbps FICON	
N-MSA	$1.00
Price Band 4	1.00
Price Band 5	1.00
Price Band 6	1.00
Protected 2 Gbps FICON	
N-MSA	1.00
Price Band 4	1.00
Price Band 5	1.00
Price Band 6	1.00
Protected 1 Gbps Fibre Channel	
N-MSA	1.00
Price Band 4	1.00
Price Band 5	1.00
Price Band 6	1.00
Protected 2 Gbps Fibre Channel	
N-MSA	1.00
Price Band 4	1.00
Price Band 5	1.00
Price Band 6	1.00
Protected FDDI	
N-MSA	1.00
Price Band 4	1.00
Price Band 5	1.00
Price Band 6	1.00

Service availability limited. Refer to # footnote on Page 7-117.

© 2022 Frontier Communications Parent, Inc. All rights reserved

7. Special Access Service (Cont'd)

7.5 Rates and Charges (Cont'd)

7.5.24 Dedicated SONET Optical Transport Service# (Cont'd)

(E) Point-to-Point Optical Transport Channels (Cont'd)

(2) Nonrecurring Charges (Cont'd)

(a) Initial Installation Charges, Per Optical Transport Channel (Cont'd)

Interface Type	Category I Nonrecurring Charges
Protected Multi-Port Facility	
N-MSA	$1.00
Price Band 4	1.00
Price Band 5	1.00
Price Band 6	1.00
Protected Multi-Port Channel	
ESCON	
N-MSA	1.00
Price Band 4	1.00
Price Band 5	1.00
Price Band 6	1.00
Fibre Channel	
N-MSA	1.00
Price Band 4	1.00
Price Band 5	1.00
Price Band 6	1.00
FDDI	
N-MSA	1.00
Price Band 4	1.00
Price Band 5	1.00
Price Band 6	1.00
Fast Ethernet	
N-MSA	1.00
Price Band 4	1.00
Price Band 5	1.00
Price Band 6	1.00
D1 Video	
N-MSA	1.00
Price Band 4	1.00
Price Band 5	1.00
Price Band 6	1.00

Service availability limited. Refer to # footnote on Page 7-117.

© 2022 Frontier Communications Parent, Inc. All rights reserved

7. Special Access Service (Cont'd)

7.5 Rates and Charges (Cont'd)

7.5.24 Dedicated SONET Optical Transport Service# (Cont'd)

(E) Point-to-Point Optical Transport Channels (Cont'd)

(2) Nonrecurring Charges (Cont'd)

(a) Initial Installation Charges, Per Optical Transport Channel (Cont'd)

Interface Type	Category II Nonrecurring Charges
Unprotected SONET OC3/OC3c	
N-MSA	$1.00
Price Band 4	1.00
Price Band 5	1.00
Price Band 6	1.00
Unprotected SONET OC12/OC12c	
N-MSA	1.00
Price Band 4	1.00
Price Band 5	1.00
Price Band 6	1.00
Unprotected SONET OC48/OC48c	
N-MSA	1.00
Price Band 4	1.00
Price Band 5	1.00
Price Band 6	1.00
Unprotected SONET OC192/OC192c	
N-MSA	1.00
Price Band 4	1.00
Price Band 5	1.00
Price Band 6	1.00
Unprotected 1 Gbps FICON	
N-MSA	1.00
Price Band 4	1.00
Price Band 5	1.00
Price Band 6	1.00
Unprotected 2 Gbps FICON	
N-MSA	1.00
Price Band 4	1.00
Price Band 5	1.00
Price Band 6	1.00

Service availability limited. Refer to # footnote on Page 7-117.

© 2022 Frontier Communications Parent, Inc. All rights reserved

7. Special Access Service (Cont'd)

7.5 Rates and Charges (Cont'd)

7.5.24 Dedicated SONET Optical Transport Service# (Cont'd)

(E) Point-to-Point Optical Transport Channels (Cont'd)

(2) Nonrecurring Charges (Cont'd)

(a) Initial Installation Charges, Per Optical Transport Channel (Cont'd)

Interface Type	Category II Nonrecurring Charges
Unprotected 1 Gbps Fibre Channel	
N-MSA	$1.00
Price Band 4	1.00
Price Band 5	1.00
Price Band 6	1.00
Unprotected 2G Fibre Channel	
N-MSA	1.00
Price Band 4	1.00
Price Band 5	1.00
Price Band 6	1.00
Unprotected ETR/CLO	
N-MSA	1.00
Price Band 4	1.00
Price Band 5	1.00
Price Band 6	1.00
Unprotected FDDI	
N-MSA	1.00
Price Band 4	1.00
Price Band 5	1.00
Price Band 6	1.00
Unprotected ISC	
N-MSA	1.00
Price Band 4	1.00
Price Band 5	1.00
Price Band 6	1.00

Service availability limited. Refer to # footnote on Page 7-117.

© 2022 Frontier Communications Parent, Inc. All rights reserved

7. Special Access Service (Cont'd)

7.5 Rates and Charges (Cont'd)

7.5.24 Dedicated SONET Optical Transport Service# (Cont'd)

(E) Point-to-Point Optical Transport Channels (Cont'd)

(2) Nonrecurring Charges (Cont'd)

(a) Initial Installation Charges, Per Optical Transport Channel (Cont'd)

Interface Type	Category II Nonrecurring Charges
Unprotected ISC3	
N-MSA	$1.00
Price Band 4	1.00
Price Band 5	1.00
Price Band 6	1.00
Unprotected Fast Ethernet	
N-MSA	1.00
Price Band 4	1.00
Price Band 5	1.00
Price Band 6	1.00
Unprotected Gigabit Ethernet	
N-MSA	1.00
Price Band 4	1.00
Price Band 5	1.00
Price Band 6	1.00
Unprotected 10 Gigabit Ethernet LAN-PHY/WAN-PHY	
N-MSA	1.00
Price Band 4	1.00
Price Band 5	1.00
Price Band 6	1.00
Unprotected D1 Video	
N-MSA	1.00
Price Band 4	1.00
Price Band 5	1.00
Price Band 6	1.00

Service availability limited. Refer to # footnote on Page 7-117.

© 2022 Frontier Communications Parent, Inc. All rights reserved

7. Special Access Service (Cont'd)

7.5 Rates and Charges (Cont'd)

7.5.24 Dedicated SONET Optical Transport Service# (Cont'd)

(E) Point-to-Point Optical Transport Channels (Cont'd)

(2) Nonrecurring Charges (Cont'd)

(a) Initial Installation Charges, Per Optical Transport Channel (Cont'd)

Interface Type	Category II Nonrecurring Charges
Unprotected Multi-Port Facility	
N-MSA	$1.00
Price Band 4	1.00
Price Band 5	1.00
Price Band 6	1.00
Unprotected Multi-Port Channel	
ESCON	
N-MSA	1.00
Price Band 4	1.00
Price Band 5	1.00
Price Band 6	1.00
Fibre Channel	
N-MSA	1.00
Price Band 4	1.00
Price Band 5	1.00
Price Band 6	1.00
FDDI	
N-MSA	1.00
Price Band 4	1.00
Price Band 5	1.00
Price Band 6	1.00
Fast Ethernet	
N-MSA	1.00
Price Band 4	1.00
Price Band 5	1.00
Price Band 6	1.00
D1 Video	
N-MSA	1.00
Price Band 4	1.00
Price Band 5	1.00
Price Band 6	1.00

Service availability limited. Refer to # footnote on Page 7-117.

© 2022 Frontier Communications Parent, Inc. All rights reserved

7. Special Access Service (Cont'd)

7.5 Rates and Charges (Cont'd)

7.5.24 Dedicated SONET Optical Transport Service# (Cont'd)

(E) Point-to-Point Optical Transport Channels (Cont'd)

(2) Nonrecurring Charges (Cont'd)

(a) Initial Installation Charges,
Per Optical Transport Channel (Cont'd)

Interface Type	Category II Nonrecurring Charges
Protected SONET OC3/OC3c	
N-MSA	$1.00
Price Band 4	1.00
Price Band 5	1.00
Price Band 6	1.00
Protected OC12/OC12c	
N-MSA	1.00
Price Band 4	1.00
Price Band 5	1.00
Price Band 6	1.00
Protected OC48/OC48c	
N-MSA	1.00
Price Band 4	1.00
Price Band 5	1.00
Price Band 6	1.00
Protected OC192/OC192c	
N-MSA	1.00
Price Band 4	1.00
Price Band 5	1.00
Price Band 6	1.00

Service availability limited. Refer to # footnote on Page 7-117.

© 2022 Frontier Communications Parent, Inc. All rights reserved

7. Special Access Service (Cont'd)

7.5 Rates and Charges (Cont'd)

7.5.24 Dedicated SONET Optical Transport Service# (Cont'd)

(E) Point-to-Point Optical Transport Channels (Cont'd)

(2) Nonrecurring Charges (Cont'd)

(a) Initial Installation Charges, Per Optical Transport Channel (Cont'd)

Interface Type	Category II Nonrecurring Charges
Protected 1 Gbps FICON	
N-MSA	$1.00
Price Band 4	1.00
Price Band 5	1.00
Price Band 6	1.00
Protected 2 Gbps FICON	
N-MSA	1.00
Price Band 4	1.00
Price Band 5	1.00
Price Band 6	1.00
Protected 1 Gbps Fibre Channel	
N-MSA	1.00
Price Band 4	1.00
Price Band 5	1.00
Price Band 6	1.00
Protected 2 Gbps Fibre Channel	
N-MSA	1.00
Price Band 4	1.00
Price Band 5	1.00
Price Band 6	1.00
Protected FDDI	
N-MSA	1.00
Price Band 4	1.00
Price Band 5	1.00
Price Band 6	1.00

Service availability limited. Refer to # footnote on Page 7-117.

© 2022 Frontier Communications Parent, Inc. All rights reserved

7. Special Access Service (Cont'd)

7.5 Rates and Charges (Cont'd)

7.5.24 Dedicated SONET Optical Transport Service# (Cont'd)

(E) Point-to-Point Optical Transport Channels (Cont'd)

(2) Nonrecurring Charges (Cont'd)

(a) Initial Installation Charges, Per Optical Transport Channel (Cont'd)

Interface Type	Category II Nonrecurring Charges
Protected ISC	
N-MSA	$1.00
Price Band 4	1.00
Price Band 5	1.00
Price Band 6	1.00
Protected ISC3	
N-MSA	1.00
Price Band 4	1.00
Price Band 5	1.00
Price Band 6	1.00
Protected Fast Ethernet	
N-MSA	1.00
Price Band 4	1.00
Price Band 5	1.00
Price Band 6	1.00
Protected Gigabit Ethernet	
N-MSA	1.00
Price Band 4	1.00
Price Band 5	1.00
Price Band 6	1.00
Protected 10 Gigabit Ethernet LAN-PHY/WAN-PHY	
N-MSA	1.00
Price Band 4	1.00
Price Band 5	1.00
Price Band 6	1.00
Protected D1 Video	
N-MSA	1.00
Price Band 4	1.00
Price Band 5	1.00
Price Band 6	1.00

Service availability limited. Refer to # footnote on Page 7-117.

© 2022 Frontier Communications Parent, Inc. All rights reserved

7. Special Access Service (Cont'd)

7.5 Rates and Charges (Cont'd)

7.5.24 Dedicated SONET Optical Transport Service# (Cont'd)

(E) Point-to-Point Optical Transport Channels (Cont'd)

(2) Nonrecurring Charges (Cont'd)

(a) Initial Installation Charges, Per Optical Transport Channel (Cont'd)

Interface Type	Category II Nonrecurring Charges
Protected Multi-Port Facility	
N-MSA	$1.00
Price Band 4	1.00
Price Band 5	1.00
Price Band 6	1.00
Protected Multi-Port Channel	
ESCON	
N-MSA	1.00
Price Band 4	1.00
Price Band 5	1.00
Price Band 6	1.00
Fibre Channel	
N-MSA	1.00
Price Band 4	1.00
Price Band 5	1.00
Price Band 6	1.00
FDDI	
N-MSA	1.00
Price Band 4	1.00
Price Band 5	1.00
Price Band 6	1.00
Fast Ethernet	
N-MSA	1.00
Price Band 4	1.00
Price Band 5	1.00
Price Band 6	1.00
D1 Video	
N-MSA	1.00
Price Band 4	1.00
Price Band 5	1.00
Price Band 6	1.00

Service availability limited. Refer to # footnote on Page 7-117.

© 2022 Frontier Communications Parent, Inc. All rights reserved

7. Special Access Service (Cont'd)

7.5 Rates and Charges (Cont'd)

7.5.24 Dedicated SONET Optical Transport Service# (Cont'd)

(E) Point-to-Point Optical Transport Channels (Cont'd)

(2) Nonrecurring Charges (Cont'd)

(b) Subsequent Installation Charges, Per Optical Transport Channel

Interface Type	Category I Nonrecurring Charges
Unprotected SONET OC3/OC3c	
N-MSA	$1.00
Price Band 4	1.00
Price Band 5	1.00
Price Band 6	1.00
Unprotected OC12/OC12c	
N-MSA	1.00
Price Band 4	1.00
Price Band 5	1.00
Price Band 6	1.00
Unprotected OC48/48c	
N-MSA	1.00
Price Band 4	1.00
Price Band 5	1.00
Price Band 6	1.00
Unprotected OC192/OC192c	
N-MSA	1.00
Price Band 4	1.00
Price Band 5	1.00
Price Band 6	1.00
Unprotected 1 Gbps FICON	
N-MSA	1.00
Price Band 4	1.00
Price Band 5	1.00
Price Band 6	1.00

Service availability limited. Refer to # footnote on Page 7-117.

© 2022 Frontier Communications Parent, Inc. All rights reserved

7. Special Access Service (Cont'd)

7.5 Rates and Charges (Cont'd)

7.5.24 Dedicated SONET Optical Transport Service# (Cont'd)

(E) Point-to-Point Optical Transport Channels (Cont'd)

(2) Nonrecurring Charges (Cont'd)

(b) Subsequent Installation Charges, Per Optical Transport Channel (Cont'd)

	Category I
Interface Type	Nonrecurring Charges
Unprotected 2 Gbps FICON	
N-MSA	$1.00
Price Band 4	1.00
Price Band 5	1.00
Price Band 6	1.00
Unprotected 1 Gbps Fibre Channel	
N-MSA	1.00
Price Band 4	1.00
Price Band 5	1.00
Price Band 6	1.00
Unprotected 2 Gbps Fibre Channel	
N-MSA	1.00
Price Band 4	1.00
Price Band 5	1.00
Price Band 6	1.00
Unprotected ETR/CLO	
N-MSA	1.00
Price Band 4	1.00
Price Band 5	1.00
Price Band 6	1.00
Unprotected FDDI	
N-MSA	1.00
Price Band 4	1.00
Price Band 5	1.00
Price Band 6	1.00

Service availability limited. Refer to # footnote on Page 7-117.

© 2022 Frontier Communications Parent, Inc. All rights reserved

7. Special Access Service (Cont'd)

7.5 Rates and Charges (Cont'd)

7.5.24 Dedicated SONET Optical Transport Service# (Cont'd)

(E) Point-to-Point Optical Transport Channels (Cont'd)

(2) Nonrecurring Charges (Cont'd)

(b) Subsequent Installation Charges, Per Optical Transport Channel (Cont'd)

Interface Type	Category I Nonrecurring Charges
Unprotected ISC	
N-MSA	$1.00
Price Band 4	1.00
Price Band 5	1.00
Price Band 6	1.00
Unprotected ISC3	
N-MSA	1.00
Price Band 4	1.00
Price Band 5	1.00
Price Band 6	1.00
Unprotected Fast Ethernet	
N-MSA	1.00
Price Band 4	1.00
Price Band 5	1.00
Price Band 6	1.00
Unprotected Gigabit Ethernet	
N-MSA	1.00
Price Band 4	1.00
Price Band 5	1.00
Price Band 6	1.00
Unprotected 10 Gigabit Ethernet LAN-PHY/WAN-PHY	
N-MSA	1.00
Price Band 4	1.00
Price Band 5	1.00
Price Band 6	1.00
Unprotected D1 Video	
N-MSA	1.00
Price Band 4	1.00
Price Band 5	1.00
Price Band 6	1.00

Service availability limited. Refer to # footnote on Page 7-117.

© 2022 Frontier Communications Parent, Inc. All rights reserved

7. Special Access Service (Cont'd)

7.5 Rates and Charges (Cont'd)

7.5.24 Dedicated SONET Optical Transport Service# (Cont'd)

(E) Point-to-Point Optical Transport Channels (Cont'd)

(2) Nonrecurring Charges (Cont'd)

(b) Subsequent Installation Charges, Per Optical Transport Channel (Cont'd)

Interface Type	Category I Nonrecurring Charges
Unprotected Multi-Port Facility	
N-MSA	$1.00
Price Band 4	1.00
Price Band 5	1.00
Price Band 6	1.00
Unprotected Multi-Port Channel	
ESCON	
N-MSA	1.00
Price Band 4	1.00
Price Band 5	1.00
Price Band 6	1.00
Fibre Channel	
N-MSA	1.00
Price Band 4	1.00
Price Band 5	1.00
Price Band 6	1.00
FDDI	
N-MSA	1.00
Price Band 4	1.00
Price Band 5	1.00
Price Band 6	1.00
Fast Ethernet	
N-MSA	1.00
Price Band 4	1.00
Price Band 5	1.00
Price Band 6	1.00
D1 Video	
N-MSA	1.00
Price Band 4	1.00
Price Band 5	1.00
Price Band 6	1.00

Service availability limited. Refer to # footnote on Page 7-117.

© 2022 Frontier Communications Parent, Inc. All rights reserved

7. Special Access Service (Cont'd)

7.5 Rates and Charges (Cont'd)

7.5.24 Dedicated SONET Optical Transport Service# (Cont'd)

(E) Point-to-Point Optical Transport Channels (Cont'd)

(2) Nonrecurring Charges (Cont'd)

(b) Subsequent Installation Charges, Per Optical Transport Channel (Cont'd)

Interface Type	Category I Nonrecurring Charges
Protected SONET OC3/OC3c	
N-MSA	$1.00
Price Band 4	1.00
Price Band 5	1.00
Price Band 6	1.00
Protected OC12/OC12c	
N-MSA	1.00
Price Band 4	1.00
Price Band 5	1.00
Price Band 6	1.00
Protected OC48/OC48c	
N-MSA	1.00
Price Band 4	1.00
Price Band 5	1.00
Price Band 6	1.00
Protected OC192/192c	
N-MSA	1.00
Price Band 4	1.00
Price Band 5	1.00
Price Band 6	1.00

Service availability limited. Refer to # footnote on Page 7-117.

© 2022 Frontier Communications Parent, Inc. All rights reserved

7. Special Access Service (Cont'd)

7.5 Rates and Charges (Cont'd)

7.5.24 Dedicated SONET Optical Transport Service# (Cont'd)

(E) Point-to-Point Optical Transport Channels (Cont'd)

(2) Nonrecurring Charges (Cont'd)

(b) Subsequent Installation Charges, Per Optical Transport Channel (Cont'd)

Interface Type	Category I Nonrecurring Charges
Protected 1 Gbps FICON	
N-MSA	$1.00
Price Band 4	1.00
Price Band 5	1.00
Price Band 6	1.00
Protected 2 Gbps FICON	
N-MSA	1.00
Price Band 4	1.00
Price Band 5	1.00
Price Band 6	1.00
Protected 1 Gbps Fibre Channel	
N-MSA	1.00
Price Band 4	1.00
Price Band 5	1.00
Price Band 6	1.00
Protected 2 Gbps Fibre Channel	
N-MSA	1.00
Price Band 4	1.00
Price Band 5	1.00
Price Band 6	1.00
Protected FDDI	
N-MSA	1.00
Price Band 4	1.00
Price Band 5	1.00
Price Band 6	1.00

Service availability limited. Refer to # footnote on Page 7-117.

© 2022 Frontier Communications Parent, Inc. All rights reserved

7. Special Access Service (Cont'd)

7.5 Rates and Charges (Cont'd)

7.5.24 Dedicated SONET Optical Transport Service# (Cont'd)

(E) Point-to-Point Optical Transport Channels (Cont'd)

(2) Nonrecurring Charges (Cont'd)

(b) Subsequent Installation Charges, Per Optical Transport Channel (Cont'd)

Interface Type	Category I Nonrecurring Charges
Protected ISC	
N-MSA	$1.00
Price Band 4	1.00
Price Band 5	1.00
Price Band 6	1.00
Protected ISC3	
N-MSA	1.00
Price Band 4	1.00
Price Band 5	1.00
Price Band 6	1.00
Protected Fast Ethernet	
N-MSA	1.00
Price Band 4	1.00
Price Band 5	1.00
Price Band 6	1.00
Protected Gigabit Ethernet	
N-MSA	1.00
Price Band 4	1.00
Price Band 5	1.00
Price Band 6	1.00
Protected 10 Gigabit Ethernet LAN-PHY/WAN-PHY	
N-MSA	1.00
Price Band 4	1.00
Price Band 5	1.00
Price Band 6	1.00
Protected D1 Video	
N-MSA	1.00
Price Band 4	1.00
Price Band 5	1.00
Price Band 6	1.00

Service availability limited. Refer to # footnote on Page 7-117.

© 2022 Frontier Communications Parent, Inc. All rights reserved

7. Special Access Service (Cont'd)

7.5 Rates and Charges (Cont'd)

7.5.24 Dedicated SONET Optical Transport Service# (Cont'd)

(E) Point-to-Point Optical Transport Channels (Cont'd)

(2) Nonrecurring Charges (Cont'd)

(b) Subsequent Installation Charges, Per Optical Transport Channel (Cont'd)

Interface Type	Category I Nonrecurring Charges
Protected Multi-Port Facility	
N-MSA	$1.00
Price Band 4	1.00
Price Band 5	1.00
Price Band 6	1.00
Protected Multi-Port Channel	
ESCON	
N-MSA	1.00
Price Band 4	1.00
Price Band 5	1.00
Price Band 6	1.00
Fibre Channel	
N-MSA	1.00
Price Band 4	1.00
Price Band 5	1.00
Price Band 6	1.00
FDDI	
N-MSA	1.00
Price Band 4	1.00
Price Band 5	1.00
Price Band 6	1.00
Fast Ethernet	
N-MSA	1.00
Price Band 4	1.00
Price Band 5	1.00
Price Band 6	1.00
D1 Video	
N-MSA	1.00
Price Band 4	1.00
Price Band 5	1.00
Price Band 6	1.00

Service availability limited. Refer to # footnote on Page 7-117.

© 2022 Frontier Communications Parent, Inc. All rights reserved

7. Special Access Service (Cont'd)

7.5 Rates and Charges (Cont'd)

7.5.24 Dedicated SONET Optical Transport Service# (Cont'd)

(E) Point-to-Point Optical Transport Channels (Cont'd)

(2) Nonrecurring Charges (Cont'd)

(b) Subsequent Installation Charges, Per Optical Transport Channel (Cont'd)

Interface Type	Category II Nonrecurring Charges
Unprotected SONET OC3/OC3c	
N-MSA	$1.00
Price Band 4	1.00
Price Band 5	1.00
Price Band 6	1.00
Unprotected OC12/OC12c	
N-MSA	1.00
Price Band 4	1.00
Price Band 5	1.00
Price Band 6	1.00
Unprotected OC48/48c	
N-MSA	1.00
Price Band 4	1.00
Price Band 5	1.00
Price Band 6	1.00
Unprotected OC192/OC192c	
N-MSA	1.00
Price Band 4	1.00
Price Band 5	1.00
Price Band 6	1.00
Unprotected 1 Gbps FICON	
N-MSA	1.00
Price Band 4	1.00
Price Band 5	1.00
Price Band 6	1.00

Service availability limited. Refer to # footnote on Page 7-117.

© 2022 Frontier Communications Parent, Inc. All rights reserved

7. Special Access Service (Cont'd)

7.5 Rates and Charges (Cont'd)

7.5.24 Dedicated SONET Optical Transport Service# (Cont'd)

(E) Point-to-Point Optical Transport Channels (Cont'd)

(2) Nonrecurring Charges (Cont'd)

(b) Subsequent Installation Charges, Per Optical Transport Channel (Cont'd)

Interface Type	Category II Nonrecurring Charges
Unprotected 2 Gbps FICON	
N-MSA	$1.00
Price Band 4	1.00
Price Band 5	1.00
Price Band 6	1.00
Unprotected 1 Gbps Fibre Channel	
N-MSA	1.00
Price Band 4	1.00
Price Band 5	1.00
Price Band 6	1.00
Unprotected 2 Gbps Fibre Channel	
N-MSA	1.00
Price Band 4	1.00
Price Band 5	1.00
Price Band 6	1.00
Unprotected ETR/CLO	
N-MSA	1.00
Price Band 4	1.00
Price Band 5	1.00
Price Band 6	1.00
Unprotected FDDI	
N-MSA	1.00
Price Band 4	1.00
Price Band 5	1.00
Price Band 6	1.00

Service availability limited. Refer to # footnote on Page 7-117.

© 2022 Frontier Communications Parent, Inc. All rights reserved

7. Special Access Service (Cont'd)

7.5 Rates and Charges (Cont'd)

7.5.24 Dedicated SONET Optical Transport Service# (Cont'd)

(E) Point-to-Point Optical Transport Channels (Cont'd)

(2) Nonrecurring Charges (Cont'd)

(b) Subsequent Installation Charges, Per Optical Transport Channel (Cont'd)

Interface Type	Category II Nonrecurring Charges
Unprotected ISC	
N-MSA	$1.00
Price Band 4	1.00
Price Band 5	1.00
Price Band 6	1.00
Unprotected ISC3	
N-MSA	1.00
Price Band 4	1.00
Price Band 5	1.00
Price Band 6	1.00
Unprotected Fast Ethernet	
N-MSA	1.00
Price Band 4	1.00
Price Band 5	1.00
Price Band 6	1.00
Unprotected Gigabit Ethernet	
N-MSA	1.00
Price Band 4	1.00
Price Band 5	1.00
Price Band 6	1.00
Unprotected 10 Gigabit Ethernet LAN-PHY/WAN-PHY	
N-MSA	1.00
Price Band 4	1.00
Price Band 5	1.00
Price Band 6	1.00
Unprotected D1 Video	
N-MSA	1.00
Price Band 4	1.00
Price Band 5	1.00
Price Band 6	1.00

Service availability limited. Refer to # footnote on Page 7-117.

© 2022 Frontier Communications Parent, Inc. All rights reserved

7. Special Access Service (Cont'd)

7.5 Rates and Charges (Cont'd)

7.5.24 Dedicated SONET Optical Transport Service# (Cont'd)

(E) Point-to-Point Optical Transport Channels (Cont'd)

(2) Nonrecurring Charges (Cont'd)

(b) Subsequent Installation Charges, Per Optical Transport Channel (Cont'd)

Interface Type	Category II Nonrecurring Charges
Unprotected Multi-Port Facility	
N-MSA	$1.00
Price Band 4	1.00
Price Band 5	1.00
Price Band 6	1.00
Unprotected Multi-Port Channel	
ESCON	
N-MSA	1.00
Price Band 4	1.00
Price Band 5	1.00
Price Band 6	1.00
Fibre Channel	
N-MSA	1.00
Price Band 4	1.00
Price Band 5	1.00
Price Band 6	1.00
FDDI	
N-MSA	1.00
Price Band 4	1.00
Price Band 5	1.00
Price Band 6	1.00
Fast Ethernet	
N-MSA	1.00
Price Band 4	1.00
Price Band 5	1.00
Price Band 6	1.00
D1 Video	
N-MSA	1.00
Price Band 4	1.00
Price Band 5	1.00
Price Band 6	1.00

Service availability limited. Refer to # footnote on Page 7-117.

© 2022 Frontier Communications Parent, Inc. All rights reserved

7. Special Access Service (Cont'd)

7.5 Rates and Charges (Cont'd)

7.5.24 Dedicated SONET Optical Transport Service# (Cont'd)

(E) Point-to-Point Optical Transport Channels (Cont'd)

(2) Nonrecurring Charges (Cont'd)

(b) Subsequent Installation Charges, Per Optical Transport Channel (Cont'd)

Interface Type	Category II Nonrecurring Charges
Protected SONET OC3/OC3c	
N-MSA	$1.00
Price Band 4	1.00
Price Band 5	1.00
Price Band 6	1.00
Protected OC12/OC12c	
N-MSA	1.00
Price Band 4	1.00
Price Band 5	1.00
Price Band 6	1.00
Protected OC48/OC48c	
N-MSA	1.00
Price Band 4	1.00
Price Band 5	1.00
Price Band 6	1.00
Protected OC192/192c	
N-MSA	1.00
Price Band 4	1.00
Price Band 5	1.00
Price Band 6	1.00

Service availability limited. Refer to # footnote on Page 7-117.

© 2022 Frontier Communications Parent, Inc. All rights reserved

7. Special Access Service (Cont'd)

7.5 Rates and Charges (Cont'd)

7.5.24 Dedicated SONET Optical Transport Service# (Cont'd)

(E) Point-to-Point Optical Transport Channels (Cont'd)

(2) Nonrecurring Charges (Cont'd)

(b) Subsequent Installation Charges, Per Optical Transport Channel (Cont'd)

Interface Type	Category II Nonrecurring Charges
Protected 1 Gbps FICON	
N-MSA	$1.00
Price Band 4	1.00
Price Band 5	1.00
Price Band 6	1.00
Protected 2 Gbps FICON	
N-MSA	1.00
Price Band 4	1.00
Price Band 5	1.00
Price Band 6	1.00
Protected 1 Gbps Fibre Channel	
N-MSA	1.00
Price Band 4	1.00
Price Band 5	1.00
Price Band 6	1.00
Protected 2 Gbps Fibre Channel	
N-MSA	1.00
Price Band 4	1.00
Price Band 5	1.00
Price Band 6	1.00
Protected FDDI	
N-MSA	1.00
Price Band 4	1.00
Price Band 5	1.00
Price Band 6	1.00

Service availability limited. Refer to # footnote on Page 7-117.

© 2022 Frontier Communications Parent, Inc. All rights reserved

7. Special Access Service (Cont'd)

7.5 Rates and Charges (Cont'd)

7.5.24 Dedicated SONET Optical Transport Service# (Cont'd)

(E) Point-to-Point Optical Transport Channels (Cont'd)

(2) Nonrecurring Charges (Cont'd)

(b) Subsequent Installation Charges, Per Optical Transport Channel (Cont'd)

Interface Type	Category II Nonrecurring Charges
Protected ISC	
N-MSA	$1.00
Price Band 4	1.00
Price Band 5	1.00
Price Band 6	1.00
Protected ISC3	
N-MSA	1.00
Price Band 4	1.00
Price Band 5	1.00
Price Band 6	1.00
Protected Fast Ethernet	
N-MSA	1.00
Price Band 4	1.00
Price Band 5	1.00
Price Band 6	1.00
Protected Gigabit Ethernet	
N-MSA	1.00
Price Band 4	1.00
Price Band 5	1.00
Price Band 6	1.00
Protected 10 Gigabit Ethernet LAN-PHY/WAN-PHY	
N-MSA	1.00
Price Band 4	1.00
Price Band 5	1.00
Price Band 6	1.00
Protected D1 Video	
N-MSA	1.00
Price Band 4	1.00
Price Band 5	1.00
Price Band 6	1.00

Service availability limited. Refer to # footnote on Page 7-117.

© 2022 Frontier Communications Parent, Inc. All rights reserved

7. Special Access Service (Cont'd)

7.5 Rates and Charges (Cont'd)

7.5.24 Dedicated SONET Optical Transport Service# (Cont'd)

(E) Point-to-Point Optical Transport Channels (Cont'd)

(2) Nonrecurring Charges (Cont'd)

(b) Subsequent Installation Charges, Per Optical Transport Channel (Cont'd)

Interface Type	Category II Nonrecurring Charges
Protected Multi-Port Facility	
N-MSA	$1.00
Price Band 4	1.00
Price Band 5	1.00
Price Band 6	1.00
Protected Multi-Port Channel	
ESCON	
N-MSA	1.00
Price Band 4	1.00
Price Band 5	1.00
Price Band 6	1.00
Fibre Channel	
N-MSA	1.00
Price Band 4	1.00
Price Band 5	1.00
Price Band 6	1.00
FDDI	
N-MSA	1.00
Price Band 4	1.00
Price Band 5	1.00
Price Band 6	1.00
Fast Ethernet	
N-MSA	1.00
Price Band 4	1.00
Price Band 5	1.00
Price Band 6	1.00
D1 Video	
N-MSA	1.00
Price Band 4	1.00
Price Band 5	1.00
Price Band 6	1.00

Service availability limited. Refer to # footnote on Page 7-117.

© 2022 Frontier Communications Parent, Inc. All rights reserved

7. Special Access Service (Cont'd)

7.5 Rates and Charges (Cont'd)

7.5.24 Dedicated SONET Optical Transport Service# (Cont'd)

(F) Point-to-Fiber-Meet Optical Transport Channels

(1) Monthly Rates

		Category I	
Interface Type	3-Year Term	5-Year Term	7-Year Term
Unprotected SONET OC3/OC3c			
N-MSA	$ 425.00	$ 225.00	$ 200.00
Price Band 4	425.00	225.00	200.00
Price Band 5	425.00	225.00	200.00
Price Band 6	425.00	225.00	200.00
Unprotected SONET OC12/OC12c			
N-MSA	700.00	362.50	325.00
Price Band 4	700.00	362.50	325.00
Price Band 5	700.00	362.50	325.00
Price Band 6	700.00	362.50	325.00
Unprotected SONET OC48/OC48c			
N-MSA	1,725.00	935.00	812.50
Price Band 4	1,725.00	935.00	812.50
Price Band 5	1,725.00	935.00	812.50
Price Band 6	1,725.00	935.00	812.50
Unprotected SONET OC192/OC192c			
N-MSA	2,900.00	2,050.00	1,625.00
Price Band 4	2,900.00	2,050.00	1,625.00
Price Band 5	2,900.00	2,050.00	1,625.00
Price Band 6	2,900.00	2,050.00	1,625.00
Unprotected 1 Gbps FICON			
N-MSA	1,725.00	900.00	800.00
Price Band 4	1,725.00	900.00	800.00
Price Band 5	1,725.00	900.00	800.00
Price Band 6	1,725.00	900.00	800.00

Service availability limited. Refer to # footnote on Page 7-117.

© 2022 Frontier Communications Parent, Inc. All rights reserved

7. Special Access Service (Cont'd)

7.5 Rates and Charges (Cont'd)

7.5.24 Dedicated SONET Optical Transport Service# (Cont'd)

(F) Point-to-Fiber-Meet Optical Transport Channels (Cont'd)

(1) Monthly Rates (Cont'd)

		Category I	
Interface Type	3-Year Term	5-Year Term	7-Year Term
Unprotected 2 Gbps FICON			
N-MSA	$1,725.00	$950.00	$800.00
Price Band 4	1,725.00	950.00	800.00
Price Band 5	1,725.00	950.00	800.00
Price Band 6	1,725.00	950.00	800.00
Unprotected 1 Gbps Fibre Channel			
N-MSA	1,725.00	900.00	800.00
Price Band 4	1,725.00	900.00	800.00
Price Band 5	1,725.00	900.00	800.00
Price Band 6	1,725.00	900.00	800.00
Unprotected 2 Gbps Fibre Channel			
N-MSA	1,725.00	950.00	800.00
Price Band 4	1,725.00	950.00	800.00
Price Band 5	1,725.00	950.00	800.00
Price Band 6	1,725.00	950.00	800.00
Unprotected ETR/CLO			
N-MSA	1,725.00	900.00	800.00
Price Band 4	1,725.00	900.00	800.00
Price Band 5	1,725.00	900.00	800.00
Price Band 6	1,725.00	900.00	800.00
Unprotected FDDI			
N-MSA	1,725.00	900.00	800.00
Price Band 4	1,725.00	900.00	800.00
Price Band 5	1,725.00	900.00	800.00
Price Band 6	1,725.00	900.00	800.00

Service availability limited. Refer to # footnote on Page 7-117.

© 2022 Frontier Communications Parent, Inc. All rights reserved

7. Special Access Service (Cont'd)

7.5 Rates and Charges (Cont'd)

7.5.24 Dedicated SONET Optical Transport Service# (Cont'd)

(F) Point-to-Fiber-Meet Optical Transport Channels (Cont'd)

(1) Monthly Rates (Cont'd)

		Category I	
Interface Type	3-Year Term	5-Year Term	7-Year Term
Unprotected ISC			
N-MSA	$1,725.00	$900.00	$800.00
Price Band 4	1,725.00	900.00	800.00
Price Band 5	1,725.00	900.00	800.00
Price Band 6	1,725.00	900.00	800.00
Unprotected ISC3			
N-MSA	1,725.00	950.00	800.00
Price Band 4	1,725.00	950.00	800.00
Price Band 5	1,725.00	950.00	800.00
Price Band 6	1,725.00	950.00	800.00
Unprotected Fast Ethernet			
N-MSA	1,725.00	900.00	800.00
Price Band 4	1,725.00	900.00	800.00
Price Band 5	1,725.00	900.00	800.00
Price Band 6	1,725.00	900.00	800.00
Unprotected Gigabit Ethernet			
N-MSA	1,725.00	900.00	800.00
Price Band 4	1,725.00	900.00	800.00
Price Band 5	1,725.00	900.00	800.00
Price Band 6	1,725.00	900.00	800.00
Unprotected 10 Gigabit Ethernet LAN-PHY/WAN-PHY			
N-MSA	2,900.00	2,050.00	1,625.00
Price Band 4	2,900.00	2,050.00	1,625.00
Price Band 5	2,900.00	2,050.00	1,625.00
Price Band 6	2,900.00	2,050.00	1,625.00
Unprotected D1 Video			
N-MSA	1,725.00	900.00	800.00
Price Band 4	1,725.00	900.00	800.00
Price Band 5	1,725.00	900.00	800.00
Price Band 6	1,725.00	900.00	800.00

Service availability limited. Refer to # footnote on Page 7-117.

© 2022 Frontier Communications Parent, Inc. All rights reserved

7. Special Access Service (Cont'd)

7.5 Rates and Charges (Cont'd)

7.5.24 Dedicated SONET Optical Transport Service# (Cont'd)

(F) Point-to-Fiber-Meet Optical Transport Channels (Cont'd)

(1) Monthly Rates (Cont'd)

		Category I	
Interface Type	3-Year Term	5-Year Term	7-Year Term
Unprotected Multi-Port Facility			
N-MSA	$2,350.00	$1,250.00	$1,100.00
Price Band 4	2,350.00	1,250.00	1,100.00
Price Band 5	2,350.00	1,250.00	1,100.00
Price Band 6	2,350.00	1,250.00	1,100.00
Unprotected Multi-Port Channel			
ESCON			
N-MSA	112.50	112.50	112.50
Price Band 4	112.50	112.50	112.50
Price Band 5	112.50	112.50	112.50
Price Band 6	112.50	112.50	112.50
Fibre Channel			
N-MSA	112.50	112.50	112.50
Price Band 4	112.50	112.50	112.50
Price Band 5	112.50	112.50	112.50
Price Band 6	112.50	112.50	112.50
FDDI			
N-MSA	112.50	112.50	112.50
Price Band 4	112.50	112.50	112.50
Price Band 5	112.50	112.50	112.50
Price Band 6	112.50	112.50	112.50
Fast Ethernet			
N-MSA	112.50	112.50	112.50
Price Band 4	112.50	112.50	112.50
Price Band 5	112.50	112.50	112.50
Price Band 6	112.50	112.50	112.50
D1 Video			
N-MSA	112.50	112.50	112.50
Price Band 4	112.50	112.50	112.50
Price Band 5	112.50	112.50	112.50
Price Band 6	112.50	112.50	112.50
Protected SONET OC3/OC3c			
N-MSA	700.00	362.50	325.00
Price Band 4	700.00	362.50	325.00
Price Band 5	700.00	362.50	325.00
Price Band 6	700.00	362.50	325.00

Service availability limited. Refer to # footnote on Page 7-117.

© 2022 Frontier Communications Parent, Inc. All rights reserved

7. Special Access Service (Cont'd)

7.5 Rates and Charges (Cont'd)

7.5.24 Dedicated SONET Optical Transport Service# (Cont'd)

(F) Point-to-Fiber-Meet Optical Transport Channels (Cont'd)

(1) Monthly Rates (Cont'd)

		Category I	
Interface Type	3-Year Term	5-Year Term	7-Year Term
Protected SONET OC12/OC12c			
N-MSA	$ 975.00	$ 500.00	$ 450.00
Price Band 4	975.00	500.00	450.00
Price Band 5	975.00	500.00	450.00
Price Band 6	975.00	500.00	450.00
Protected SONET OC48/OC48c			
N-MSA	2,050.00	1,075.00	962.50
Price Band 4	2,050.00	1,075.00	962.50
Price Band 5	2,050.00	1,075.00	962.50
Price Band 6	2,050.00	1,075.00	962.50
Protected SONET OC192/OC192c			
N-MSA	3,500.00	2,800.00	2,375.00
Price Band 4	3,500.00	2,800.00	2,375.00
Price Band 5	3,500.00	2,800.00	2,375.00
Price Band 6	3,500.00	2,800.00	2,375.00
Protected 1 Gbps FICON			
N-MSA	2,100.00	1,100.00	975.00
Price Band 4	2,100.00	1,100.00	975.00
Price Band 5	2,100.00	1,100.00	975.00
Price Band 6	2,100.00	1,100.00	975.00
Protected 2 Gbps FICON			
N-MSA	2,100.00	1,150.00	975.00
Price Band	2,100.00	1,150.00	975.00
Price Band	2,100.00	1,150.00	975.00
Price Band	2,100.00	1,150.00	975.00

Service availability limited. Refer to # footnote on Page 7-117.

© 2022 Frontier Communications Parent, Inc. All rights reserved

7. Special Access Service (Cont'd)

7.5 Rates and Charges (Cont'd)

7.5.24 Dedicated SONET Optical Transport Service# (Cont'd)

(F) Point-to-Fiber-Meet Optical Transport Channels (Cont'd)

(1) Monthly Rates (Cont'd)

		Category I	
Interface Type	3-Year Term	5-Year Term	7-Year Term
Protected 1 Gbps Fibre Channel			
N-MSA	$2,100.00	$1,100.00	$975.00
Price Band 4	2,100.00	1,100.00	975.00
Price Band 5	2,100.00	1,100.00	975.00
Price Band 6	2,100.00	1,100.00	975.00
Protected 2 Gbps Fibre Channel			
N-MSA	2,100.00	1,150.00	975.00
Price Band	2,100.00	1,150.00	975.00
Price Band	2,100.00	1,150.00	975.00
Price Band	2,100.00	1,150.00	975.00
Protected FDDI			
N-MSA	2,100.00	1,100.00	975.00
Price Band 4	2,100.00	1,100.00	975.00
Price Band 5	2,100.00	1,100.00	975.00
Price Band 6	2,100.00	1,100.00	975.00
Protected ISC			
N-MSA	2,100.00	1,100.00	975.00
Price Band 4	2,100.00	1,100.00	975.00
Price Band 5	2,100.00	1,100.00	975.00
Price Band 6	2,100.00	1,100.00	975.00
Protected ISC3			
N-MSA	2,100.00	1,150.00	975.00
Price Band	2,100.00	1,150.00	975.00
Price Band	2,100.00	1,150.00	975.00
Price Band	2,100.00	1,150.00	975.00

Service availability limited. Refer to # footnote on Page 7-117.

© 2022 Frontier Communications Parent, Inc. All rights reserved

7. Special Access Service (Cont'd)

7.5 Rates and Charges (Cont'd)

7.5.24 Dedicated SONET Optical Transport Service# (Cont'd)

(F) Point-to-Fiber-Meet Optical Transport Channels (Cont'd)

(1) Monthly Rates (Cont'd)

		Category I	
Interface Type	3-Year Term	5-Year Term	7-Year Term
Protected Fast Ethernet			
N-MSA	$2,100.00	$1,100.00	$975.00
Price Band 4	2,100.00	1,100.00	975.00
Price Band 5	2,100.00	1,100.00	975.00
Price Band 6	2,100.00	1,100.00	975.00
Protected Gigabit Ethernet			
N-MSA	2,100.00	1,100.00	975.00
Price Band 4	2,100.00	1,100.00	975.00
Price Band 5	2,100.00	1,100.00	975.00
Price Band 6	2,100.00	1,100.00	975.00
Protected 10 Gigabit Ethernet LAN-PHY/WAN-PHY			
N-MSA	3,500.00	2,800.00	2,375.00
Price Band	3,500.00	2,800.00	2,375.00
Price Band	3,500.00	2,800.00	2,375.00
Price Band	3,500.00	2,800.00	2,375.00
Protected D1 Video			
N-MSA	2,100.00	1,100.00	975.00
Price Band 4	2,100.00	1,100.00	975.00
Price Band 5	2,100.00	1,100.00	975.00
Price Band 6	2,100.00	1,100.00	975.00
Protected Multi-Port Facility			
N-MSA	2,850.00	1,500.00	1,350.00
Price Band 4	2,850.00	1,500.00	1,350.00
Price Band 5	2,850.00	1,500.00	1,350.00
Price Band 6	2,850.00	1,500.00	1,350.00

Service availability limited. Refer to # footnote on Page 7-117.

© 2022 Frontier Communications Parent, Inc. All rights reserved

7. Special Access Service (Cont'd)

7.5 Rates and Charges (Cont'd)

7.5.24 Dedicated SONET Optical Transport Service# (Cont'd)

(F) Point-to-Fiber-Meet Optical Transport Channels (Cont'd)

(1) Monthly Rates (Cont'd)

	Category I		
Interface Type	3-Year Term	5-Year Term	7-Year Term
Protected Multi-Port Channel			
ESCON			
N-MSA	$112.50	$112.50	$112.50
Price Band 4	112.50	112.50	112.50
Price Band 5	112.50	112.50	112.50
Price Band 6	112.50	112.50	112.50
Fibre Channel			
N-MSA	112.50	112.50	112.50
Price Band 4	112.50	112.50	112.50
Price Band 5	112.50	112.50	112.50
Price Band 6	112.50	112.50	112.50
FDDI			
N-MSA	112.50	112.50	112.50
Price Band 4	112.50	112.50	112.50
Price Band 5	112.50	112.50	112.50
Price Band 6	112.50	112.50	112.50
Fast Ethernet			
N-MSA	112.50	112.50	112.50
Price Band 4	112.50	112.50	112.50
Price Band 5	112.50	112.50	112.50
Price Band 6	112.50	112.50	112.50
D1 Video			
N-MSA	112.50	112.50	112.50
Price Band 4	112.50	112.50	112.50
Price Band 5	112.50	112.50	112.50
Price Band 6	112.50	112.50	112.50

Service availability limited. Refer to # footnote on Page 7-117.

© 2022 Frontier Communications Parent, Inc. All rights reserved

7. Special Access Service (Cont'd)

7.5 Rates and Charges (Cont'd)

7.5.24 Dedicated SONET Optical Transport Service# (Cont'd)

(F) Point-to-Fiber-Meet Optical Transport Channels (Cont'd)

(1) Monthly Rates (Cont'd)

	Category II		
Interface Type	3-Year Term	5-Year Term	7-Year Term
Unprotected SONET OC3/OC3c			
N-MSA	$ 800.00	$ 600.00	$ 500.00
Price Band 4	800.00	600.00	500.00
Price Band 5	800.00	600.00	500.00
Price Band 6	800.00	600.00	500.00
Unprotected SONET OC12/OC12c			
N-MSA	930.00	700.00	600.00
Price Band 4	930.00	700.00	600.00
Price Band 5	930.00	700.00	600.00
Price Band 6	930.00	700.00	600.00
Unprotected SONET OC48/OC48c			
N-MSA	1,000.00	750.00	700.00
Price Band 4	1,000.00	750.00	700.00
Price Band 5	1,000.00	750.00	700.00
Price Band 6	1,000.00	750.00	700.00
Unprotected SONET OC192/OC192c			
N-MSA	2,800.00	2,100.00	2,000.00
Price Band 4	2,800.00	2,100.00	2,000.00
Price Band 5	2,800.00	2,100.00	2,000.00
Price Band 6	2,800.00	2,100.00	2,000.00
Unprotected 1 Gbps FICON			
N-MSA	1,200.00	900.00	800.00
Price Band 4	1,200.00	900.00	800.00
Price Band 5	1,200.00	900.00	800.00
Price Band 6	1,200.00	900.00	800.00

Service availability limited. Refer to # footnote on Page 7-117.

© 2022 Frontier Communications Parent, Inc. All rights reserved

7. Special Access Service (Cont'd)

7.5 Rates and Charges (Cont'd)

7.5.24 Dedicated SONET Optical Transport Service# (Cont'd)

(F) Point-to-Fiber-Meet Optical Transport Channels (Cont'd)

(1) Monthly Rates (Cont'd)

	Category II		
Interface Type	3-Year Term	5-Year Term	7-Year Term
Unprotected 2 Gbps FICON			
N-MSA	$1,200.00	$900.00	$800.00
Price Band 4	1,200.00	900.00	800.00
Price Band 5	1,200.00	900.00	800.00
Price Band 6	1,200.00	900.00	800.00
Unprotected 1 Gbps Fibre Channel			
N-MSA	1,200.00	900.00	800.00
Price Band 4	1,200.00	900.00	800.00
Price Band 5	1,200.00	900.00	800.00
Price Band 6	1,200.00	900.00	800.00
Unprotected 2 Gbps Fibre Channel			
N-MSA	1,200.00	900.00	800.00
Price Band 4	1,200.00	900.00	800.00
Price Band 5	1,200.00	900.00	800.00
Price Band 6	1,200.00	900.00	800.00
Unprotected ETR/CLO			
N-MSA	1,200.00	900.00	800.00
Price Band 4	1,200.00	900.00	800.00
Price Band 5	1,200.00	900.00	800.00
Price Band 6	1,200.00	900.00	800.00
Unprotected FDDI			
N-MSA	1,200.00	900.00	800.00
Price Band 4	1,200.00	900.00	800.00
Price Band 5	1,200.00	900.00	800.00
Price Band 6	1,200.00	900.00	800.00

Service availability limited. Refer to # footnote on Page 7-117.

© 2022 Frontier Communications Parent, Inc. All rights reserved

7. Special Access Service (Cont'd)

7.5 Rates and Charges (Cont'd)

7.5.24 Dedicated SONET Optical Transport Service# (Cont'd)

(F) Point-to-Fiber-Meet Optical Transport Channels (Cont'd)

(1) Monthly Rates (Cont'd)

	Category II		
Interface Type	3-Year Term	5-Year Term	7-Year Term
Unprotected ISC			
N-MSA	$1,200.00	$900.00	$800.00
Price Band 4	1,200.00	900.00	800.00
Price Band 5	1,200.00	900.00	800.00
Price Band 6	1,200.00	900.00	800.00
Unprotected ISC3			
N-MSA	1,200.00	900.00	800.00
Price Band 4	1,200.00	900.00	800.00
Price Band 5	1,200.00	900.00	800.00
Price Band 6	1,200.00	900.00	800.00
Unprotected Fast Ethernet			
N-MSA	1,200.00	900.00	800.00
Price Band 4	1,200.00	900.00	800.00
Price Band 5	1,200.00	900.00	800.00
Price Band 6	1,200.00	900.00	800.00
Unprotected Gigabit Ethernet			
N-MSA	1,200.00	900.00	800.00
Price Band 4	1,200.00	900.00	800.00
Price Band 5	1,200.00	900.00	800.00
Price Band 6	1,200.00	900.00	800.00
Unprotected 10 Gigabit Ethernet LAN-PHY/WAN-PHY			
N-MSA	2,800.00	2,100.00	2,000.00
Price Band 4	2,800.00	2,100.00	2,000.00
Price Band 5	2,800.00	2,100.00	2,000.00
Price Band 6	2,800.00	2,100.00	2,000.00
Unprotected D1 Video			
N-MSA	1,200.00	900.00	800.00
Price Band 4	1,200.00	900.00	800.00
Price Band 5	1,200.00	900.00	800.00
Price Band 6	1,200.00	900.00	800.00

Service availability limited. Refer to # footnote on Page 7-117.

© 2022 Frontier Communications Parent, Inc. All rights reserved

7. Special Access Service (Cont'd)

7.5 Rates and Charges (Cont'd)

7.5.24 Dedicated SONET Optical Transport Service# (Cont'd)

(F) Point-to-Fiber-Meet Optical Transport Channels (Cont'd)

(1) Monthly Rates (Cont'd)

		Category II	
Interface Type	3-Year Term	5-Year Term	7-Year Term
Unprotected Multi-Port Facility			
N-MSA	$1,670.00	$1,250.00	$1,100.00
Price Band 4	1,670.00	1,250.00	1,100.00
Price Band 5	1,670.00	1,250.00	1,100.00
Price Band 6	1,670.00	1,250.00	1,100.00
Unprotected Multi-Port Channel			
ESCON			
N-MSA	112.50	112.50	112.50
Price Band 4	112.50	112.50	112.50
Price Band 5	112.50	112.50	112.50
Price Band 6	112.50	112.50	112.50
Fibre Channel			
N-MSA	112.50	112.50	112.50
Price Band 4	112.50	112.50	112.50
Price Band 5	112.50	112.50	112.50
Price Band 6	112.50	112.50	112.50
FDDI			
N-MSA	112.50	112.50	112.50
Price Band 4	112.50	112.50	112.50
Price Band 5	112.50	112.50	112.50
Price Band 6	112.50	112.50	112.50
Fast Ethernet			
N-MSA	112.50	112.50	112.50
Price Band 4	112.50	112.50	112.50
Price Band 5	112.50	112.50	112.50
Price Band 6	112.50	112.50	112.50
D1 Video			
N-MSA	112.50	112.50	112.50
Price Band 4	112.50	112.50	112.50
Price Band 5	112.50	112.50	112.50
Price Band 6	112.50	112.50	112.50
Protected SONET OC3/OC3c			
N-MSA	930.00	700.00	600.00
Price Band 4	930.00	700.00	600.00
Price Band 5	930.00	700.00	600.00
Price Band 6	930.00	700.00	600.00

Service availability limited. Refer to # footnote on Page 7-117.

© 2022 Frontier Communications Parent, Inc. All rights reserved

7. Special Access Service (Cont'd)

7.5 Rates and Charges (Cont'd)

7.5.24 Dedicated SONET Optical Transport Service# (Cont'd)

(F) Point-to-Fiber-Meet Optical Transport Channels (Cont'd)

(1) Monthly Rates (Cont'd)

		Category II	
Interface Type	3-Year Term	5-Year Term	7-Year Term
Protected SONET OC12/OC12c			
N-MSA	$,070.00	$ 800.00	$ 700.00
Price Band 4	1,070.00	800.00	700.00
Price Band 5	1,070.00	800.00	700.00
Price Band 6	1,070.00	800.00	700.00
Protected SONET OC48/OC48c			
N-MSA	1,470.00	1,100.00	1,000.00
Price Band 4	1,470.00	1,100.00	1,000.00
Price Band 5	1,470.00	1,100.00	1,000.00
Price Band 6	1,470.00	1,100.00	1,000.00
Protected SONET OC192/OC192c			
N-MSA	3,730.00	2,800.00	2,500.00
Price Band 4	3,730.00	2,800.00	2,500.00
Price Band 5	3,730.00	2,800.00	2,500.00
Price Band 6	3,730.00	2,800.00	2,500.00
Protected 1 Gbps FICON			
N-MSA	1,470.00	1,100.00	1,000.00
Price Band 4	1,470.00	1,100.00	1,000.00
Price Band 5	1,470.00	1,100.00	1,000.00
Price Band 6	1,470.00	1,100.00	1,000.00
Protected 2 Gbps FICON			
N-MSA	1,470.00	1,100.00	1,000.00
Price Band	1,470.00	1,100.00	1,000.00
Price Band	1,470.00	1,100.00	1,000.00
Price Band	1,470.00	1,100.00	1,000.00

Service availability limited. Refer to # footnote on Page 7-117.

© 2022 Frontier Communications Parent, Inc. All rights reserved

7. Special Access Service (Cont'd)

7.5 Rates and Charges (Cont'd)

7.5.24 Dedicated SONET Optical Transport Service# (Cont'd)

(F) Point-to-Fiber-Meet Optical Transport Channels (Cont'd)

(1) Monthly Rates (Cont'd)

		Category II	
Interface Type	3-Year Term	5-Year Term	7-Year Term
Protected 1 Gbps Fibre Channel			
N-MSA	$1,470.00	$1,100.00	$1,000.00
Price Band 4	1,470.00	1,100.00	1,000.00
Price Band 5	1,470.00	1,100.00	1,000.00
Price Band 6	1,470.00	1,100.00	1,000.00
Protected 2 Gbps Fibre Channel			
N-MSA	1,470.00	1,100.00	1,000.00
Price Band	1,470.00	1,100.00	1,000.00
Price Band	1,470.00	1,100.00	1,000.00
Price Band	1,470.00	1,100.00	1,000.00
Protected FDDI			
N-MSA	1,470.00	1,100.00	1,000.00
Price Band 4	1,470.00	1,100.00	1,000.00
Price Band 5	1,470.00	1,100.00	1,000.00
Price Band 6	1,470.00	1,100.00	1,000.00
Protected ISC			
N-MSA	1,470.00	1,100.00	1,000.00
Price Band 4	1,470.00	1,100.00	1,000.00
Price Band 5	1,470.00	1,100.00	1,000.00
Price Band 6	1,470.00	1,100.00	1,000.00
Protected ISC3			
N-MSA	1,470.00	1,100.00	1,000.00
Price Band	1,470.00	1,100.00	1,000.00
Price Band	1,470.00	1,100.00	1,000.00
Price Band	1,470.00	1,100.00	1,000.00

Service availability limited. Refer to # footnote on Page 7-117.

© 2022 Frontier Communications Parent, Inc. All rights reserved

7. Special Access Service (Cont'd)

7.5 Rates and Charges (Cont'd)

7.5.24 Dedicated SONET Optical Transport Service# (Cont'd)

(F) Point-to-Fiber-Meet Optical Transport Channels (Cont'd)

(1) Monthly Rates (Cont'd)

		Category II	
Interface Type	3-Year Term	5-Year Term	7-Year Term
Protected Fast Ethernet			
N-MSA	$1,470.00	$1,100.00	$1,000.00
Price Band 4	1,470.00	1,100.00	1,000.00
Price Band 5	1,470.00	1,100.00	1,000.00
Price Band 6	1,470.00	1,100.00	1,000.00
Protected Gigabit Ethernet			
N-MSA	1,470.00	1,100.00	1,000.00
Price Band 4	1,470.00	1,100.00	1,000.00
Price Band 5	1,470.00	1,100.00	1,000.00
Price Band 6	1,470.00	1,100.00	1,000.00
Protected 10 Gigabit Ethernet LAN-PHY/WAN-PHY			
N-MSA	3,730.00	2,800.00	2,500.00
Price Band	3,730.00	2,800.00	2,500.00
Price Band	3,730.00	2,800.00	2,500.00
Price Band	3,730.00	2,800.00	2,500.00
Protected D1 Video			
N-MSA	1,470.00	1,100.00	1,000.00
Price Band 4	1,470.00	1,100.00	1,000.00
Price Band 5	1,470.00	1,100.00	1,000.00
Price Band 6	1,470.00	1,100.00	1,000.00
Protected Multi-Port Facility			
N-MSA	2,000.00	1,500.00	1,350.00
Price Band 4	2,000.00	1,500.00	1,350.00
Price Band 5	2,000.00	1,500.00	1,350.00
Price Band 6	2,000.00	1,500.00	1,350.00

Service availability limited. Refer to # footnote on Page 7-117.

© 2022 Frontier Communications Parent, Inc. All rights reserved

7. Special Access Service (Cont'd)

7.5 Rates and Charges (Cont'd)

7.5.24 Dedicated SONET Optical Transport Service# (Cont'd)

(F) Point-to-Fiber-Meet Optical Transport Channels (Cont'd)

(1) Monthly Rates (Cont'd)

	Category II		
Interface Type	3-Year Term	5-Year Term	7-Year Term
Protected Multi-Port Channel			
ESCON			
N-MSA	$112.50	$112.50	$112.50
Price Band 4	112.50	112.50	112.50
Price Band 5	112.50	112.50	112.50
Price Band 6	112.50	112.50	112.50
Fibre Channel			
N-MSA	112.50	112.50	112.50
Price Band 4	112.50	112.50	112.50
Price Band 5	112.50	112.50	112.50
Price Band 6	112.50	112.50	112.50
FDDI			
N-MSA	112.50	112.50	112.50
Price Band 4	112.50	112.50	112.50
Price Band 5	112.50	112.50	112.50
Price Band 6	112.50	112.50	112.50
Fast Ethernet			
N-MSA	112.50	112.50	112.50
Price Band 4	112.50	112.50	112.50
Price Band 5	112.50	112.50	112.50
Price Band 6	112.50	112.50	112.50
D1 Video			
N-MSA	112.50	112.50	112.50
Price Band 4	112.50	112.50	112.50
Price Band 5	112.50	112.50	112.50
Price Band 6	112.50	112.50	112.50

Service availability limited. Refer to # footnote on Page 7-117.

© 2022 Frontier Communications Parent, Inc. All rights reserved

7. Special Access Service (Cont'd)

7.5 Rates and Charges (Cont'd)

7.5.24 Dedicated SONET Optical Transport Service# (Cont'd)

(F) Point-to-Fiber-Meet Optical Transport Channels (Cont'd)

(2) Nonrecurring Charges

(a) Initial Installation Charges,
Per Partial Optical Transport Channel

Interface Type	Category I Nonrecurring Charges
Unprotected SONET OC3/OC3c	
N-MSA	$1.00
Price Band 4	1.00
Price Band 5	1.00
Price Band 6	1.00
Unprotected SONET OC12/OC12c	
N-MSA	1.00
Price Band 4	1.00
Price Band 5	1.00
Price Band 6	1.00
Unprotected SONET OC48/OC48c	
N-MSA	1.00
Price Band 4	1.00
Price Band 5	1.00
Price Band 6	1.00
Unprotected SONET OC192/OC192c	
N-MSA	1.00
Price Band 4	1.00
Price Band 5	1.00
Price Band 6	1.00
Unprotected 1 Gbps FICON	
N-MSA	1.00
Price Band 4	1.00
Price Band 5	1.00
Price Band 6	1.00
Unprotected 2 Gbps FICON	
N-MSA	1.00
Price Band 4	1.00
Price Band 5	1.00
Price Band 6	1.00

Service availability limited. Refer to # footnote on Page 7-117.

© 2022 Frontier Communications Parent, Inc. All rights reserved

7. Special Access Service (Cont'd)

7.5 Rates and Charges (Cont'd)

7.5.24 Dedicated SONET Optical Transport Service# (Cont'd)

(F) Point-to-Fiber-Meet Optical Transport Channels (Cont'd)

(2) Nonrecurring Charges (Cont'd)

(a) Initial Installation Charges,
Per Partial Optical Transport Channel (Cont'd)

Interface Type	Category I Nonrecurring Charges
Unprotected 1 Gbps Fibre Channel	
N-MSA	$1.00
Price Band 4	1.00
Price Band 5	1.00
Price Band 6	1.00
Unprotected 2 Gbps Fibre Channel	
N-MSA	1.00
Price Band 4	1.00
Price Band 5	1.00
Price Band 6	1.00
Unprotected ETR/CLO	
N-MSA	1.00
Price Band 4	1.00
Price Band 5	1.00
Price Band 6	1.00
Unprotected FDDI	
N-MSA	1.00
Price Band 4	1.00
Price Band 5	1.00
Price Band 6	1.00
Unprotected ISC	
N-MSA	1.00
Price Band 4	1.00
Price Band 5	1.00
Price Band 6	1.00

Service availability limited. Refer to # footnote on Page 7-117.

© 2022 Frontier Communications Parent, Inc. All rights reserved

7. Special Access Service (Cont'd)

7.5 Rates and Charges (Cont'd)

7.5.24 Dedicated SONET Optical Transport Service# (Cont'd)

(F) Point-to-Fiber-Meet Optical Transport Channels (Cont'd)

(2) Nonrecurring Charges (Cont'd)

(a) Initial Installation Charges,
Per Partial Optical Transport Channel (Cont'd)

Interface Type	Category I Nonrecurring Charges
Unprotected ISC3	
N-MSA	$1.00
Price Band 4	1.00
Price Band 5	1.00
Price Band 6	1.00
Unprotected Fast Ethernet	
N-MSA	1.00
Price Band 4	1.00
Price Band 5	1.00
Price Band 6	1.00
Unprotected Gigabit Ethernet	
N-MSA	1.00
Price Band 4	1.00
Price Band 5	1.00
Price Band 6	1.00
Unprotected 10 Gigabit Ethernet LAN-PHY/WAN-PHY	
N-MSA	1.00
Price Band 4	1.00
Price Band 5	1.00
Price Band 6	1.00
Unprotected D1 Video	
N-MSA	1.00
Price Band 4	1.00
Price Band 5	1.00
Price Band 6	1.00

Service availability limited. Refer to # footnote on Page 7-117.

© 2022 Frontier Communications Parent, Inc. All rights reserved

7. Special Access Service (Cont'd)

7.5 Rates and Charges (Cont'd)

7.5.24 Dedicated SONET Optical Transport Service# (Cont'd)

(F) Point-to-Fiber-Meet Optical Transport Channels (Cont'd)

(2) Nonrecurring Charges (Cont'd)

(a) Initial Installation Charges,
Per Partial Optical Transport Channel (Cont'd)

Interface Type	Category I Nonrecurring Charges
Unprotected Multi-Port Facility	
N-MSA	$1.00
Price Band 4	1.00
Price Band 5	1.00
Price Band 6	1.00
Unprotected Multi-Port Channel	
ESCON	
N-MSA	1.00
Price Band 4	1.00
Price Band 5	1.00
Price Band 6	1.00
Fibre Channel	
N-MSA	1.00
Price Band 4	1.00
Price Band 5	1.00
Price Band 6	1.00
FDDI	
N-MSA	1.00
Price Band 4	1.00
Price Band 5	1.00
Price Band 6	1.00
Fast Ethernet	
N-MSA	1.00
Price Band 4	1.00
Price Band 5	1.00
Price Band 6	1.00
D1 Video	
N-MSA	1.00
Price Band 4	1.00
Price Band 5	1.00
Price Band 6	1.00

Service availability limited. Refer to # footnote on Page 7-117.

© 2022 Frontier Communications Parent, Inc. All rights reserved

7. Special Access Service (Cont'd)

7.5 Rates and Charges (Cont'd)

7.5.24 Dedicated SONET Optical Transport Service# (Cont'd)

(F) Point-to-Fiber-Meet Optical Transport Channels (Cont'd)

(2) Nonrecurring Charges (Cont'd)

(a) Initial Installation Charges,
Per Partial Optical Transport Channel (Cont'd)

Interface Type	Category I Nonrecurring Charges
Protected SONET OC3/OC3c	
N-MSA	$1.00
Price Band 4	1.00
Price Band 5	1.00
Price Band 6	1.00
Protected SONET OC12/OC12c	
N-MSA	1.00
Price Band 4	1.00
Price Band 5	1.00
Price Band 6	1.00
Protected SONET OC48/OC48c	
N-MSA	1.00
Price Band 4	1.00
Price Band 5	1.00
Price Band 6	1.00
Protected SONET OC192/OC192c	
N-MSA	1.00
Price Band 4	1.00
Price Band 5	1.00
Price Band 6	1.00
Protected 1 Gbps FICON	
N-MSA	1.00
Price Band 4	1.00
Price Band 5	1.00
Price Band 6	1.00

Service availability limited. Refer to # footnote on Page 7-117.

© 2022 Frontier Communications Parent, Inc. All rights reserved

7. Special Access Service (Cont'd)

7.5 Rates and Charges (Cont'd)

7.5.24 Dedicated SONET Optical Transport Service# (Cont'd)

(F) Point-to-Fiber-Meet Optical Transport Channels (Cont'd)

(2) Nonrecurring Charges (Cont'd)

(a) Initial Installation Charges,
Per Partial Optical Transport Channel (Cont'd)

Interface Type	Category I Nonrecurring Charges
Protected 2 Gbps FICON	
N-MSA	$1.00
Price Band 4	1.00
Price Band 5	1.00
Price Band 6	1.00
Protected 1 Gbps Fibre Channel	
N-MSA	1.00
Price Band 4	1.00
Price Band 5	1.00
Price Band 6	1.00
Protected 2 Gbps Fibre Channel	
N-MSA	1.00
Price Band 4	1.00
Price Band 5	1.00
Price Band 6	1.00
Protected FDDI	
N-MSA	1.00
Price Band 4	1.00
Price Band 5	1.00
Price Band 6	1.00
Protected ISC	
N-MSA	1.00
Price Band 4	1.00
Price Band 5	1.00
Price Band 6	1.00

Service availability limited. Refer to # footnote on Page 7-117.

© 2022 Frontier Communications Parent, Inc. All rights reserved

7. Special Access Service (Cont'd)

7.5 Rates and Charges (Cont'd)

7.5.24 Dedicated SONET Optical Transport Service# (Cont'd)

(F) Point-to-Fiber-Meet Optical Transport Channels (Cont'd)

(2) Nonrecurring Charges (Cont'd)

(a) Initial Installation Charges,
Per Partial Optical Transport Channel (Cont'd)

Interface Type	Category I Nonrecurring Charges
Protected ISC3	
N-MSA	$1.00
Price Band 4	1.00
Price Band 5	1.00
Price Band 6	1.00
Protected Fast Ethernet	
N-MSA	1.00
Price Band 4	1.00
Price Band 5	1.00
Price Band 6	1.00
Protected Gigabit Ethernet	
N-MSA	1.00
Price Band 4	1.00
Price Band 5	1.00
Price Band 6	1.00
Protected 10 Gigabit Ethernet LAN-PHY/WAN-PHY	
N-MSA	1.00
Price Band 4	1.00
Price Band 5	1.00
Price Band 6	1.00
Protected D1 Video	
N-MSA	1.00
Price Band 4	1.00
Price Band 5	1.00
Price Band 6	1.00
Protected Multi-Port Facility	
N-MSA	1.00
Price Band 4	1.00
Price Band 5	1.00
Price Band 6	1.00

Service availability limited. Refer to # footnote on Page 7-117.

© 2022 Frontier Communications Parent, Inc. All rights reserved

7. Special Access Service (Cont'd)

7.5 Rates and Charges (Cont'd)

7.5.24 Dedicated SONET Optical Transport Service# (Cont'd)

(F) Point-to-Fiber-Meet Optical Transport Channels (Cont'd)

(2) Nonrecurring Charges (Cont'd)

(a) Initial Installation Charges,
Per Partial Optical Transport Channel (Cont'd)

Interface Type	Category I Nonrecurring Charges
Protected Multi-Port Channel	
ESCON	
N-MSA	$1.00
Price Band 4	1.00
Price Band 5	1.00
Price Band 6	1.00
Fibre Channel	
N-MSA	1.00
Price Band 4	1.00
Price Band 5	1.00
Price Band 6	1.00
FDDI	
N-MSA	1.00
Price Band 4	1.00
Price Band 5	1.00
Price Band 6	1.00
Fast Ethernet	
N-MSA	1.00
Price Band 4	1.00
Price Band 5	1.00
Price Band 6	1.00
D1 Video	
N-MSA	1.00
Price Band 4	1.00
Price Band 5	1.00
Price Band 6	1.00

Service availability limited. Refer to # footnote on Page 7-117.

© 2022 Frontier Communications Parent, Inc. All rights reserved

7. Special Access Service (Cont'd)

7.5 Rates and Charges (Cont'd)

7.5.24 Dedicated SONET Optical Transport Service# (Cont'd)

(F) Point-to-Fiber-Meet Optical Transport Channels (Cont'd)

(2) Nonrecurring Charges (Cont'd)

(a) Initial Installation Charges,
Per Partial Optical Transport Channel (Cont'd)

Interface Type	Category II Nonrecurring Charges
Unprotected SONET OC3/OC3c	
N-MSA	$1.00
Price Band 4	1.00
Price Band 5	1.00
Price Band 6	1.00
Unprotected SONET OC12/OC12c	
N-MSA	1.00
Price Band 4	1.00
Price Band 5	1.00
Price Band 6	1.00
Unprotected SONET OC48/OC48c	
N-MSA	1.00
Price Band 4	1.00
Price Band 5	1.00
Price Band 6	1.00
Unprotected SONET OC192/OC192c	
N-MSA	1.00
Price Band 4	1.00
Price Band 5	1.00
Price Band 6	1.00
Unprotected 1 Gbps FICON	
N-MSA	1.00
Price Band 4	1.00
Price Band 5	1.00
Price Band 6	1.00
Unprotected 2 Gbps FICON	
N-MSA	1.00
Price Band 4	1.00
Price Band 5	1.00
Price Band 6	1.00

Service availability limited. Refer to # footnote on Page 7-117.

© 2022 Frontier Communications Parent, Inc. All rights reserved

7. Special Access Service (Cont'd)

7.5 Rates and Charges (Cont'd)

7.5.24 Dedicated SONET Optical Transport Service# (Cont'd)

(F) Point-to-Fiber-Meet Optical Transport Channels (Cont'd)

(2) Nonrecurring Charges (Cont'd)

(a) Initial Installation Charges,
Per Partial Optical Transport Channel (Cont'd)

Interface Type	Category II Nonrecurring Charges
Unprotected 1 Gbps Fibre Channel	
N-MSA	$1.00
Price Band 4	1.00
Price Band 5	1.00
Price Band 6	1.00
Unprotected 2 Gbps Fibre Channel	
N-MSA	1.00
Price Band 4	1.00
Price Band 5	1.00
Price Band 6	1.00
Unprotected ETR/CLO	
N-MSA	1.00
Price Band 4	1.00
Price Band 5	1.00
Price Band 6	1.00
Unprotected FDDI	
N-MSA	1.00
Price Band 4	1.00
Price Band 5	1.00
Price Band 6	1.00
Unprotected ISC	
N-MSA	1.00
Price Band 4	1.00
Price Band 5	1.00
Price Band 6	1.00

Service availability limited. Refer to # footnote on Page 7-117.

© 2022 Frontier Communications Parent, Inc. All rights reserved

7. Special Access Service (Cont'd)

7.5 Rates and Charges (Cont'd)

7.5.24 Dedicated SONET Optical Transport Service# (Cont'd)

(F) Point-to-Fiber-Meet Optical Transport Channels (Cont'd)

(2) Nonrecurring Charges (Cont'd)

(a) Initial Installation Charges,
Per Partial Optical Transport Channel (Cont'd)

Interface Type	Category II Nonrecurring Charges
Unprotected ISC3	
N-MSA	$1.00
Price Band 4	1.00
Price Band 5	1.00
Price Band 6	1.00
Unprotected Fast Ethernet	
N-MSA	1.00
Price Band 4	1.00
Price Band 5	1.00
Price Band 6	1.00
Unprotected Gigabit Ethernet	
N-MSA	1.00
Price Band 4	1.00
Price Band 5	1.00
Price Band 6	1.00
Unprotected 10 Gigabit Ethernet LAN-PHY/WAN-PHY	
N-MSA	1.00
Price Band 4	1.00
Price Band 5	1.00
Price Band 6	1.00
Unprotected D1 Video	
N-MSA	1.00
Price Band 4	1.00
Price Band 5	1.00
Price Band 6	1.00

Service availability limited. Refer to # footnote on Page 7-117.

© 2022 Frontier Communications Parent, Inc. All rights reserved

7. Special Access Service (Cont'd)

7.5 Rates and Charges (Cont'd)

7.5.24 Dedicated SONET Optical Transport Service# (Cont'd)

(F) Point-to-Fiber-Meet Optical Transport Channels (Cont'd)

(2) Nonrecurring Charges (Cont'd)

(a) Initial Installation Charges,
Per Partial Optical Transport Channel (Cont'd)

Interface Type	Category II Nonrecurring Charges
Unprotected Multi-Port Facility	
N-MSA	$1.00
Price Band 4	1.00
Price Band 5	1.00
Price Band 6	1.00
Unprotected Multi-Port Channel	
ESCON	
N-MSA	1.00
Price Band 4	1.00
Price Band 5	1.00
Price Band 6	1.00
Fibre Channel	
N-MSA	1.00
Price Band 4	1.00
Price Band 5	1.00
Price Band 6	1.00
FDDI	
N-MSA	1.00
Price Band 4	1.00
Price Band 5	1.00
Price Band 6	1.00
Fast Ethernet	
N-MSA	1.00
Price Band 4	1.00
Price Band 5	1.00
Price Band 6	1.00
D1 Video	
N-MSA	1.00
Price Band 4	1.00
Price Band 5	1.00
Price Band 6	1.00

Service availability limited. Refer to # footnote on Page 7-117.

© 2022 Frontier Communications Parent, Inc. All rights reserved

7. Special Access Service (Cont'd)

7.5 Rates and Charges (Cont'd)

7.5.24 Dedicated SONET Optical Transport Service# (Cont'd)

(F) Point-to-Fiber-Meet Optical Transport Channels (Cont'd)

(2) Nonrecurring Charges (Cont'd)

(a) Initial Installation Charges,
Per Partial Optical Transport Channel (Cont'd)

Interface Type	Category II Nonrecurring Charges
Protected SONET OC3/OC3c	
N-MSA	$1.00
Price Band 4	1.00
Price Band 5	1.00
Price Band 6	1.00
Protected SONET OC12/OC12c	
N-MSA	1.00
Price Band 4	1.00
Price Band 5	1.00
Price Band 6	1.00
Protected SONET OC48/OC48c	
N-MSA	1.00
Price Band 4	1.00
Price Band 5	1.00
Price Band 6	1.00
Protected SONET OC192/OC192c	
N-MSA	1.00
Price Band 4	1.00
Price Band 5	1.00
Price Band 6	1.00
Protected 1 Gbps FICON	
N-MSA	1.00
Price Band 4	1.00
Price Band 5	1.00
Price Band 6	1.00

Service availability limited. Refer to # footnote on Page 7-117.

© 2022 Frontier Communications Parent, Inc. All rights reserved

7. Special Access Service (Cont'd)

7.5 Rates and Charges (Cont'd)

7.5.24 Dedicated SONET Optical Transport Service# (Cont'd)

(F) Point-to-Fiber-Meet Optical Transport Channels (Cont'd)

(2) Nonrecurring Charges (Cont'd)

(a) Initial Installation Charges,
Per Partial Optical Transport Channel (Cont'd)

Interface Type	Category II Nonrecurring Charges
Protected 2 Gbps FICON	
N-MSA	$1.00
Price Band 4	1.00
Price Band 5	1.00
Price Band 6	1.00
Protected 1 Gbps Fibre Channel	
N-MSA	1.00
Price Band 4	1.00
Price Band 5	1.00
Price Band 6	1.00
Protected 2 Gbps Fibre Channel	
N-MSA	1.00
Price Band 4	1.00
Price Band 5	1.00
Price Band 6	1.00
Protected FDDI	
N-MSA	1.00
Price Band 4	1.00
Price Band 5	1.00
Price Band 6	1.00
Protected ISC	
N-MSA	1.00
Price Band 4	1.00
Price Band 5	1.00
Price Band 6	1.00

Service availability limited. Refer to # footnote on Page 7-117.

© 2022 Frontier Communications Parent, Inc. All rights reserved

7. Special Access Service (Cont'd)

7.5 Rates and Charges (Cont'd)

7.5.24 Dedicated SONET Optical Transport Service# (Cont'd)

(F) Point-to-Fiber-Meet Optical Transport Channels (Cont'd)

(2) Nonrecurring Charges (Cont'd)

(a) Initial Installation Charges,
Per Partial Optical Transport Channel (Cont'd)

Interface Type	Category II Nonrecurring Charges
Protected ISC3	
N-MSA	$1.00
Price Band 4	1.00
Price Band 5	1.00
Price Band 6	1.00
Protected Fast Ethernet	
N-MSA	1.00
Price Band 4	1.00
Price Band 5	1.00
Price Band 6	1.00
Protected Gigabit Ethernet	
N-MSA	1.00
Price Band 4	1.00
Price Band 5	1.00
Price Band 6	1.00
Protected 10 Gigabit Ethernet LAN-PHY/WAN-PHY	
N-MSA	1.00
Price Band 4	1.00
Price Band 5	1.00
Price Band 6	1.00
Protected D1 Video	
N-MSA	1.00
Price Band 4	1.00
Price Band 5	1.00
Price Band 6	1.00
Protected Multi-Port Facility	
N-MSA	1.00
Price Band 4	1.00
Price Band 5	1.00
Price Band 6	1.00

Service availability limited. Refer to # footnote on Page 7-117.

© 2022 Frontier Communications Parent, Inc. All rights reserved

7. Special Access Service (Cont'd)

7.5 Rates and Charges (Cont'd)

7.5.24 Dedicated SONET Optical Transport Service# (Cont'd)

(F) Point-to-Fiber-Meet Optical Transport Channels (Cont'd)

(2) Nonrecurring Charges (Cont'd)

(a) Initial Installation Charges,
Per Partial Optical Transport Channel (Cont'd)

Interface Type	Category II Nonrecurring Charges
Protected Multi-Port Channel	
ESCON	
N-MSA	$1.00
Price Band 4	1.00
Price Band 5	1.00
Price Band 6	1.00
Fibre Channel	
N-MSA	1.00
Price Band 4	1.00
Price Band 5	1.00
Price Band 6	1.00
FDDI	
N-MSA	1.00
Price Band 4	1.00
Price Band 5	1.00
Price Band 6	1.00
Fast Ethernet	
N-MSA	1.00
Price Band 4	1.00
Price Band 5	1.00
Price Band 6	1.00
D1 Video	
N-MSA	1.00
Price Band 4	1.00
Price Band 5	1.00
Price Band 6	1.00

Service availability limited. Refer to # footnote on Page 7-117.

© 2022 Frontier Communications Parent, Inc. All rights reserved

7. Special Access Service (Cont'd)

7.5 Rates and Charges (Cont'd)

7.5.24 Dedicated SONET Optical Transport Service# (Cont'd)

(F) Point-to-Fiber-Meet Optical Transport Channels (Cont'd)

(2) Nonrecurring Charges (Cont'd)

(b) Subsequent Installation Charges,
Per Partial Optical Transport Channel

Interface Type	Category I Nonrecurring Charges
Unprotected SONET OC3/OC3c	
N-MSA	$1.00
Price Band 4	1.00
Price Band 5	1.00
Price Band 6	1.00
Unprotected SONET OC12/OC12c	
N-MSA	1.00
Price Band 4	1.00
Price Band 5	1.00
Price Band 6	1.00
Unprotected SONET OC48/OC48c	
N-MSA	1.00
Price Band 4	1.00
Price Band 5	1.00
Price Band 6	1.00
Unprotected SONET OC192/OC192c	
N-MSA	1.00
Price Band 4	1.00
Price Band 5	1.00
Price Band 6	1.00
Unprotected 1 Gbps FICON	
N-MSA	1.00
Price Band 4	1.00
Price Band 5	1.00
Price Band 6	1.00

Service availability limited. Refer to # footnote on Page 7-117.

© 2022 Frontier Communications Parent, Inc. All rights reserved

7. Special Access Service (Cont'd)

7.5 Rates and Charges (Cont'd)

7.5.24 Dedicated SONET Optical Transport Service# (Cont'd)

(F) Point-to-Fiber-Meet Optical Transport Channels (Cont'd)

(2) Nonrecurring Charges (Cont'd)

(b) Subsequent Installation Charges,
Per Partial Optical Transport Channel (Cont'd)

Interface Type	Category I Nonrecurring Charges
Unprotected 2 Gbps FICON	
N-MSA	$1.00
Price Band 4	1.00
Price Band 5	1.00
Price Band 6	1.00
Unprotected 1 Gbps Fibre Channel	
N-MSA	1.00
Price Band 4	1.00
Price Band 5	1.00
Price Band 6	1.00
Unprotected 2 Gbps Fibre Channel	
N-MSA	1.00
Price Band 4	1.00
Price Band 5	1.00
Price Band 6	1.00
Unprotected ETR/CLO	
N-MSA	1.00
Price Band 4	1.00
Price Band 5	1.00
Price Band 6	1.00
Unprotected FDDI	
N-MSA	1.00
Price Band 4	1.00
Price Band 5	1.00
Price Band 6	1.00

Service availability limited. Refer to # footnote on Page 7-117.

© 2022 Frontier Communications Parent, Inc. All rights reserved

7. Special Access Service (Cont'd)

7.5 Rates and Charges (Cont'd)

7.5.24 Dedicated SONET Optical Transport Service# (Cont'd)

(F) Point-to-Fiber-Meet Optical Transport Channels (Cont'd)

(2) Nonrecurring Charges (Cont'd)

(b) Subsequent Installation Charges,
Per Partial Optical Transport Channel (Cont'd)

Interface Type	Category I Nonrecurring Charges
Unprotected ISC	
N-MSA	$1.00
Price Band 4	1.00
Price Band 5	1.00
Price Band 6	1.00
Unprotected ISC3	
N-MSA	1.00
Price Band 4	1.00
Price Band 5	1.00
Price Band 6	1.00
Unprotected Fast Ethernet	
N-MSA	1.00
Price Band 4	1.00
Price Band 5	1.00
Price Band 6	1.00
Unprotected Gigabit Ethernet	
N-MSA	1.00
Price Band 4	1.00
Price Band 5	1.00
Price Band 6	1.00
Unprotected 10 Gigabit Ethernet LAN-PHY/WAN-PHY	
N-MSA	1.00
Price Band 4	1.00
Price Band 5	1.00
Price Band 6	1.00
Unprotected D1 Video	
N-MSA	1.00
Price Band 4	1.00
Price Band 5	1.00
Price Band 6	1.00

Service availability limited. Refer to # footnote on Page 7-117.

© 2022 Frontier Communications Parent, Inc. All rights reserved

7. Special Access Service (Cont'd)

7.5 Rates and Charges (Cont'd)

7.5.24 Dedicated SONET Optical Transport Service# (Cont'd)

(F) Point-to-Fiber-Meet Optical Transport Channels (Cont'd)

(2) Nonrecurring Charges (Cont'd)

(b) Subsequent Installation Charges,
Per Partial Optical Transport Channel (Cont'd)

Interface Type	Category I Nonrecurring Charges
Unprotected Multi-Port Facility	
N-MSA	$1.00
Price Band 4	1.00
Price Band 5	1.00
Price Band 6	1.00
Unprotected Multi-Port Channel	
ESCON	
N-MSA	1.00
Price Band 4	1.00
Price Band 5	1.00
Price Band 6	1.00
Fibre Channel	
N-MSA	1.00
Price Band 4	1.00
Price Band 5	1.00
Price Band 6	1.00
FDDI	
N-MSA	1.00
Price Band 4	1.00
Price Band 5	1.00
Price Band 6	1.00
Fast Ethernet	
N-MSA	1.00
Price Band 4	1.00
Price Band 5	1.00
Price Band 6	1.00
D1 Video	
N-MSA	1.00
Price Band 4	1.00
Price Band 5	1.00
Price Band 6	1.00

Service availability limited. Refer to # footnote on Page 7-117.

© 2022 Frontier Communications Parent, Inc. All rights reserved

7. Special Access Service (Cont'd)

7.5 Rates and Charges (Cont'd)

7.5.24 Dedicated SONET Optical Transport Service# (Cont'd)

(F) Point-to-Fiber-Meet Optical Transport Channels (Cont'd)

(2) Nonrecurring Charges (Cont'd)

(b) Subsequent Installation Charges,
Per Partial Optical Transport Channel (Cont'd)

Interface Type	Category I Nonrecurring Charges
Protected SONET OC3/OC3c	
N-MSA	$1.00
Price Band 4	1.00
Price Band 5	1.00
Price Band 6	1.00
Protected SONET OC12/OC12c	
N-MSA	1.00
Price Band 4	1.00
Price Band 5	1.00
Price Band 6	1.00
Protected SONET OC48/OC48c	
N-MSA	1.00
Price Band 4	1.00
Price Band 5	1.00
Price Band 6	1.00
Protected SONET O192/OC192c	
N-MSA	1.00
Price Band 4	1.00
Price Band 5	1.00
Price Band 6	1.00
Protected 1 Gbps FICON	
N-MSA	1.00
Price Band 4	1.00
Price Band 5	1.00
Price Band 6	1.00

Service availability limited. Refer to # footnote on Page 7-117.

© 2022 Frontier Communications Parent, Inc. All rights reserved

7. Special Access Service (Cont'd)

7.5 Rates and Charges (Cont'd)

7.5.24 Dedicated SONET Optical Transport Service# (Cont'd)

(F) Point-to-Fiber-Meet Optical Transport Channels (Cont'd)

(2) Nonrecurring Charges (Cont'd)

(b) Subsequent Installation Charges,
Per Partial Optical Transport Channel (Cont'd)

Interface Type	Category I Nonrecurring Charges
Protected 2 Gbps FICON	
N-MSA	$1.00
Price Band 4	1.00
Price Band 5	1.00
Price Band 6	1.00
Protected 1 Gbps Fibre Channel	
N-MSA	1.00
Price Band 4	1.00
Price Band 5	1.00
Price Band 6	1.00
Protected 2 Gbps Fibre Channel	
N-MSA	1.00
Price Band 4	1.00
Price Band 5	1.00
Price Band 6	1.00
Protected FDDI	
N-MSA	1.00
Price Band 4	1.00
Price Band 5	1.00
Price Band 6	1.00
Protected ISC	
N-MSA	1.00
Price Band 4	1.00
Price Band 5	1.00
Price Band 6	1.00

Service availability limited. Refer to # footnote on Page 7-117.

© 2022 Frontier Communications Parent, Inc. All rights reserved

7. Special Access Service (Cont'd)

7.5 Rates and Charges (Cont'd)

7.5.24 Dedicated SONET Optical Transport Service# (Cont'd)

(F) Point-to-Fiber-Meet Optical Transport Channels (Cont'd)

(2) Nonrecurring Charges (Cont'd)

(b) Subsequent Installation Charges,
Per Partial Optical Transport Channel (Cont'd)

Interface Type	Category I Nonrecurring Charges
Protected ISC3	
N-MSA	$1.00
Price Band 4	1.00
Price Band 5	1.00
Price Band 6	1.00
Protected Fast Ethernet	
N-MSA	1.00
Price Band 4	1.00
Price Band 5	1.00
Price Band 6	1.00
Protected Gigabit Ethernet	
N-MSA	1.00
Price Band 4	1.00
Price Band 5	1.00
Price Band 6	1.00
Protected 10 Gigabit Ethernet LAN-PHY/WAN-PHY	
N-MSA	1.00
Price Band 4	1.00
Price Band 5	1.00
Price Band 6	1.00
Protected D1 Video	
N-MSA	1.00
Price Band 4	1.00
Price Band 5	1.00
Price Band 6	1.00
Protected Multi-Port Facility	
N-MSA	1.00
Price Band 4	1.00
Price Band 5	1.00
Price Band 6	1.00

Service availability limited. Refer to # footnote on Page 7-117.

© 2022 Frontier Communications Parent, Inc. All rights reserved

7. Special Access Service (Cont'd)

7.5 Rates and Charges (Cont'd)

7.5.24 Dedicated SONET Optical Transport Service# (Cont'd)

(F) Point-to-Fiber-Meet Optical Transport Channels (Cont'd)

(2) Nonrecurring Charges (Cont'd)

(b) Subsequent Installation Charges,
Per Partial Optical Transport Channel (Cont'd)

Interface Type	Category I Nonrecurring Charges
Protected Multi-Port Channel	
ESCON	
N-MSA	$1.00
Price Band 4	1.00
Price Band 5	1.00
Price Band 6	1.00
Fibre Channel	
N-MSA	1.00
Price Band 4	1.00
Price Band 5	1.00
Price Band 6	1.00
FDDI	
N-MSA	1.00
Price Band 4	1.00
Price Band 5	1.00
Price Band 6	1.00
Fast Ethernet	
N-MSA	1.00
Price Band 4	1.00
Price Band 5	1.00
Price Band 6	1.00
D1 Video	
N-MSA	1.00
Price Band 4	1.00
Price Band 5	1.00
Price Band 6	1.00

Service availability limited. Refer to # footnote on Page 7-117.

© 2022 Frontier Communications Parent, Inc. All rights reserved

7. Special Access Service (Cont'd)

7.5 Rates and Charges (Cont'd)

7.5.24 Dedicated SONET Optical Transport Service# (Cont'd)

(F) Point-to-Fiber-Meet Optical Transport Channels (Cont'd)

(2) Nonrecurring Charges (Cont'd)

(b) Subsequent Installation Charges,
Per Partial Optical Transport Channel (Cont'd)

Interface Type	Category II Nonrecurring Charges
Unprotected SONET OC3/OC3c	
N-MSA	$1.00
Price Band 4	1.00
Price Band 5	1.00
Price Band 6	1.00
Unprotected SONET OC12/OC12c	
N-MSA	1.00
Price Band 4	1.00
Price Band 5	1.00
Price Band 6	1.00
Unprotected SONET OC48/OC48c	
N-MSA	1.00
Price Band 4	1.00
Price Band 5	1.00
Price Band 6	1.00
Unprotected SONET OC192/OC192c	
N-MSA	1.00
Price Band 4	1.00
Price Band 5	1.00
Price Band 6	1.00
Unprotected 1 Gbps FICON	
N-MSA	1.00
Price Band 4	1.00
Price Band 5	1.00
Price Band 6	1.00

Service availability limited. Refer to # footnote on Page 7-117.

© 2022 Frontier Communications Parent, Inc. All rights reserved

7. Special Access Service (Cont'd)

7.5 Rates and Charges (Cont'd)

7.5.24 Dedicated SONET Optical Transport Service# (Cont'd)

(F) Point-to-Fiber-Meet Optical Transport Channels (Cont'd)

(2) Nonrecurring Charges (Cont'd)

(b) Subsequent Installation Charges,
Per Partial Optical Transport Channel (Cont'd)

Interface Type	Category II Nonrecurring Charges
Unprotected 2 Gbps FICON	
N-MSA	$1.00
Price Band 4	1.00
Price Band 5	1.00
Price Band 6	1.00
Unprotected 1 Gbps Fibre Channel	
N-MSA	1.00
Price Band 4	1.00
Price Band 5	1.00
Price Band 6	1.00
Unprotected 2 Gbps Fibre Channel	
N-MSA	1.00
Price Band 4	1.00
Price Band 5	1.00
Price Band 6	1.00
Unprotected ETR/CLO	
N-MSA	1.00
Price Band 4	1.00
Price Band 5	1.00
Price Band 6	1.00
Unprotected FDDI	
N-MSA	1.00
Price Band 4	1.00
Price Band 5	1.00
Price Band 6	1.00

Service availability limited. Refer to # footnote on Page 7-117.

© 2022 Frontier Communications Parent, Inc. All rights reserved

7. Special Access Service (Cont'd)

7.5 Rates and Charges (Cont'd)

7.5.24 Dedicated SONET Optical Transport Service# (Cont'd)

(F) Point-to-Fiber-Meet Optical Transport Channels (Cont'd)

(2) Nonrecurring Charges (Cont'd)

(b) Subsequent Installation Charges,
Per Partial Optical Transport Channel (Cont'd)

Interface Type	Category I Nonrecurring Charges
Unprotected ISC	
N-MSA	$1.00
Price Band 4	1.00
Price Band 5	1.00
Price Band 6	1.00
Unprotected ISC3	
N-MSA	1.00
Price Band 4	1.00
Price Band 5	1.00
Price Band 6	1.00
Unprotected Fast Ethernet	
N-MSA	1.00
Price Band 4	1.00
Price Band 5	1.00
Price Band 6	1.00
Unprotected Gigabit Ethernet	
N-MSA	1.00
Price Band 4	1.00
Price Band 5	1.00
Price Band 6	1.00
Unprotected 10 Gigabit Ethernet LAN-PHY/WAN-PHY	
N-MSA	1.00
Price Band 4	1.00
Price Band 5	1.00
Price Band 6	1.00
Unprotected D1 Video	
N-MSA	1.00
Price Band 4	1.00
Price Band 5	1.00
Price Band 6	1.00

Service availability limited. Refer to # footnote on Page 7-117.

© 2022 Frontier Communications Parent, Inc. All rights reserved

7. Special Access Service (Cont'd)

7.5 Rates and Charges (Cont'd)

7.5.24 Dedicated SONET Optical Transport Service# (Cont'd)

(F) Point-to-Fiber-Meet Optical Transport Channels (Cont'd)

(2) Nonrecurring Charges (Cont'd)

(b) Subsequent Installation Charges,
Per Partial Optical Transport Channel (Cont'd)

Interface Type	Category II Nonrecurring Charges
Unprotected Multi-Port Facility	
N-MSA	$1.00
Price Band 4	1.00
Price Band 5	1.00
Price Band 6	1.00
Unprotected Multi-Port Channel	
ESCON	
N-MSA	1.00
Price Band 4	1.00
Price Band 5	1.00
Price Band 6	1.00
Fibre Channel	
N-MSA	1.00
Price Band 4	1.00
Price Band 5	1.00
Price Band 6	1.00
FDDI	
N-MSA	1.00
Price Band 4	1.00
Price Band 5	1.00
Price Band 6	1.00
Fast Ethernet	
N-MSA	1.00
Price Band 4	1.00
Price Band 5	1.00
Price Band 6	1.00
D1 Video	
N-MSA	1.00
Price Band 4	1.00
Price Band 5	1.00
Price Band 6	1.00

Service availability limited. Refer to # footnote on Page 7-117.

© 2022 Frontier Communications Parent, Inc. All rights reserved

7. Special Access Service (Cont'd)

7.5 Rates and Charges (Cont'd)

7.5.24 Dedicated SONET Optical Transport Service# (Cont'd)

(F) Point-to-Fiber-Meet Optical Transport Channels (Cont'd)

(2) Nonrecurring Charges (Cont'd)

(b) Subsequent Installation Charges,
Per Partial Optical Transport Channel (Cont'd)

Interface Type	Category II Nonrecurring Charges
Protected SONET OC3/OC3c	
N-MSA	$1.00
Price Band 4	1.00
Price Band 5	1.00
Price Band 6	1.00
Protected SONET OC12/OC12c	
N-MSA	1.00
Price Band 4	1.00
Price Band 5	1.00
Price Band 6	1.00
Protected SONET OC48/OC48c	
N-MSA	1.00
Price Band 4	1.00
Price Band 5	1.00
Price Band 6	1.00
Protected SONET O192/OC192c	
N-MSA	1.00
Price Band 4	1.00
Price Band 5	1.00
Price Band 6	1.00
Protected 1 Gbps FICON	
N-MSA	1.00
Price Band 4	1.00
Price Band 5	1.00
Price Band 6	1.00

Service availability limited. Refer to # footnote on Page 7-117.

© 2022 Frontier Communications Parent, Inc. All rights reserved

7. Special Access Service (Cont'd)

7.5 Rates and Charges (Cont'd)

7.5.24 Dedicated SONET Optical Transport Service# (Cont'd)

(F) Point-to-Fiber-Meet Optical Transport Channels (Cont'd)

(2) Nonrecurring Charges (Cont'd)

(b) Subsequent Installation Charges,
Per Partial Optical Transport Channel (Cont'd)

Interface Type	Category II Nonrecurring Charges
Protected 2 Gbps FICON	
N-MSA	$1.00
Price Band 4	1.00
Price Band 5	1.00
Price Band 6	1.00
Protected 1 Gbps Fibre Channel	
N-MSA	1.00
Price Band 4	1.00
Price Band 5	1.00
Price Band 6	1.00
Protected 2 Gbps Fibre Channel	
N-MSA	1.00
Price Band 4	1.00
Price Band 5	1.00
Price Band 6	1.00
Protected FDDI	
N-MSA	1.00
Price Band 4	1.00
Price Band 5	1.00
Price Band 6	1.00
Protected ISC	
N-MSA	1.00
Price Band 4	1.00
Price Band 5	1.00
Price Band 6	1.00

Service availability limited. Refer to # footnote on Page 7-117.

© 2022 Frontier Communications Parent, Inc. All rights reserved

7. Special Access Service (Cont'd)

7.5 Rates and Charges (Cont'd)

7.5.24 Dedicated SONET Optical Transport Service# (Cont'd)

(F) Point-to-Fiber-Meet Optical Transport Channels (Cont'd)

(2) Nonrecurring Charges (Cont'd)

(b) Subsequent Installation Charges, Per Partial Optical Transport Channel (Cont'd)

Interface Type	Category II Nonrecurring Charges
Protected ISC3	
N-MSA	$1.00
Price Band 4	1.00
Price Band 5	1.00
Price Band 6	1.00
Protected Fast Ethernet	
N-MSA	1.00
Price Band 4	1.00
Price Band 5	1.00
Price Band 6	1.00
Protected Gigabit Ethernet	
N-MSA	1.00
Price Band 4	1.00
Price Band 5	1.00
Price Band 6	1.00
Protected 10 Gigabit Ethernet LAN-PHY/WAN-PHY	
N-MSA	1.00
Price Band 4	1.00
Price Band 5	1.00
Price Band 6	1.00
Protected D1 Video	
N-MSA	1.00
Price Band 4	1.00
Price Band 5	1.00
Price Band 6	1.00
Protected Multi-Port Facility	
N-MSA	1.00
Price Band 4	1.00
Price Band 5	1.00
Price Band 6	1.00

Service availability limited. Refer to # footnote on Page 7-117.

© 2022 Frontier Communications Parent, Inc. All rights reserved

7. Special Access Service (Cont'd)

7.5 Rates and Charges (Cont'd)

7.5.24 Dedicated SONET Optical Transport Service# (Cont'd)

(F) Point-to-Fiber-Meet Optical Transport Channels (Cont'd)

(2) Nonrecurring Charges (Cont'd)

(b) Subsequent Installation Charges,
Per Partial Optical Transport Channel (Cont'd)

Interface Type	Category II Nonrecurring Charges
Protected Multi-Port Channel	
ESCON	
N-MSA	$1.00
Price Band 4	1.00
Price Band 5	1.00
Price Band 6	1.00
Fibre Channel	
N-MSA	1.00
Price Band 4	1.00
Price Band 5	1.00
Price Band 6	1.00
FDDI	
N-MSA	1.00
Price Band 4	1.00
Price Band 5	1.00
Price Band 6	1.00
Fast Ethernet	
N-MSA	1.00
Price Band 4	1.00
Price Band 5	1.00
Price Band 6	1.00
D1 Video	
N-MSA	1.00
Price Band 4	1.00
Price Band 5	1.00
Price Band 6	1.00

Service availability limited. Refer to # footnote on Page 7-117.

© 2022 Frontier Communications Parent, Inc. All rights reserved

7. Special Access Service (Cont'd)

7.5 Rates and Charges (Cont'd)

7.5.24 Dedicated SONET Optical Transport Service# (Cont'd)

(G) Partial Ring Channel Mapping
Per Channel Mapped on a Partial Ring

Interface Type	Category I Nonrecurring Charge
Unprotected SONET OC3/OC3c	
N-MSA	$150.00
Price Band 4	150.00
Price Band 5	150.00
Price Band 6	150.00
Unprotected SONET OC12/OC12c	
N-MSA	150.00
Price Band 4	150.00
Price Band 5	150.00
Price Band 6	150.00
Unprotected SONET OC48/OC48c	
N-MSA	150.00
Price Band 4	150.00
Price Band 5	150.00
Price Band 6	150.00
Unprotected SONET OC192/OC192c	
N-MSA	150.00
Price Band 4	150.00
Price Band 5	150.00
Price Band 6	150.00
Unprotected 1 Gbps FICON	
N-MSA	150.00
Price Band 4	150.00
Price Band 5	150.00
Price Band 6	150.00
Unprotected 2 Gbps FICON	
N-MSA	150.00
Price Band 4	150.00
Price Band 5	150.00
Price Band 6	150.00

Service availability limited. Refer to # footnote on Page 7-117.

© 2022 Frontier Communications Parent, Inc. All rights reserved

7. Special Access Service (Cont'd)

7.5 Rates and Charges (Cont'd)

7.5.24 Dedicated SONET Optical Transport Service# (Cont'd)

(G) Partial Ring Channel Mapping
Per Channel Mapped on a Partial Ring (Cont'd)

Interface Type	Category I Nonrecurring Charge
Unprotected 1 Gbps Fibre Channel	
N-MSA	$150.00
Price Band 4	150.00
Price Band 5	150.00
Price Band 6	150.00
Unprotected 2 Gbps Fibre Channel	
N-MSA	150.00
Price Band 4	150.00
Price Band 5	150.00
Price Band 6	150.00
Unprotected ETR/CLO	
N-MSA	150.00
Price Band 4	150.00
Price Band 5	150.00
Price Band 6	150.00
Unprotected FDDI	
N-MSA	150.00
Price Band 4	150.00
Price Band 5	150.00
Price Band 6	150.00
Unprotected ISC	
N-MSA	150.00
Price Band 4	150.00
Price Band 5	150.00
Price Band 6	150.00

Service availability limited. Refer to # footnote on Page 7-117.

© 2022 Frontier Communications Parent, Inc. All rights reserved

7. Special Access Service (Cont'd)

7.5 Rates and Charges (Cont'd)

7.5.24 Dedicated SONET Optical Transport Service# (Cont'd)

(G) Partial Ring Channel Mapping
Per Channel Mapped on a Partial Ring (Cont'd)

Interface Type	Category I Nonrecurring Charge
Unprotected ISC3	
N-MSA	$150.00
Price Band 4	150.00
Price Band 5	150.00
Price Band 6	150.00
Unprotected Fast Ethernet	
N-MSA	150.00
Price Band 4	150.00
Price Band 5	150.00
Price Band 6	150.00
Unprotected Gigabit Ethernet	
N-MSA	150.00
Price Band 4	150.00
Price Band 5	150.00
Price Band 6	150.00
Unprotected 10 Gigabit Ethernet LAN-PHY/WAN-PHY	
N-MSA	150.00
Price Band 4	150.00
Price Band 5	150.00
Price Band 6	150.00
Unprotected D1 Video	
N-MSA	150.00
Price Band 4	150.00
Price Band 5	150.00
Price Band 6	150.00

Service availability limited. Refer to # footnote on Page 7-117.

© 2022 Frontier Communications Parent, Inc. All rights reserved

7. Special Access Service (Cont'd)

7.5 Rates and Charges (Cont'd)

7.5.24 Dedicated SONET Optical Transport Service# (Cont'd)

(G) Partial Ring Channel Mapping
Per Channel Mapped on a Partial Ring (Cont'd)

Interface Type	Category I Nonrecurring Charge
Unprotected Multi-Port Facility	
N-MSA	$150.00
Price Band 4	150.00
Price Band 5	150.00
Price Band 6	150.00
Unprotected Multi-Port Channel	
ESCON	
N-MSA	150.00
Price Band 4	150.00
Price Band 5	150.00
Price Band 6	150.00
Fibre Channel	
N-MSA	150.00
Price Band 4	150.00
Price Band 5	150.00
Price Band 6	150.00
FDDI	
N-MSA	150.00
Price Band 4	150.00
Price Band 5	150.00
Price Band 6	150.00
Fast Ethernet	
N-MSA	150.00
Price Band 4	150.00
Price Band 5	150.00
Price Band 6	150.00
D1 Video	
N-MSA	150.00
Price Band 4	150.00
Price Band 5	150.00
Price Band 6	150.00

Service availability limited. Refer to # footnote on Page 7-117.

© 2022 Frontier Communications Parent, Inc. All rights reserved

7. Special Access Service (Cont'd)

7.5 Rates and Charges (Cont'd)

7.5.24 Dedicated SONET Optical Transport Service# (Cont'd)

(G) Partial Ring Channel Mapping
Per Channel Mapped on a Partial Ring (Cont'd)

Interface Type	Category I Nonrecurring Charge
Protected SONET OC3/OC3c	
N-MSA	$150.00
Price Band 4	150.00
Price Band 5	150.00
Price Band 6	150.00
Protected SONET OC12/OC12c	
N-MSA	150.00
Price Band 4	150.00
Price Band 5	150.00
Price Band 6	150.00
Protected SONET OC48/OC48c	
N-MSA	150.00
Price Band 4	150.00
Price Band 5	150.00
Price Band 6	150.00
Protected SONET OC192/OC192c	
N-MSA	150.00
Price Band 4	150.00
Price Band 5	150.00
Price Band 6	150.00
Protected 1 Gbps FICON	
N-MSA	150.00
Price Band 4	150.00
Price Band 5	150.00
Price Band 6	150.00

Service availability limited. Refer to # footnote on Page 7-117.

© 2022 Frontier Communications Parent, Inc. All rights reserved

7. Special Access Service (Cont'd)

7.5 Rates and Charges (Cont'd)

7.5.24 Dedicated SONET Optical Transport Service# (Cont'd)

(G) Partial Ring Channel Mapping
Per Channel Mapped on a Partial Ring (Cont'd)

Interface Type	Category I Nonrecurring Charge
Protected 2 Gbps FICON	
N-MSA	$150.00
Price Band 4	150.00
Price Band 5	150.00
Price Band 6	150.00
Protected 1 Gbps Fibre Channel	
N-MSA	150.00
Price Band 4	150.00
Price Band 5	150.00
Price Band 6	150.00
Protected 2 Gbps Fibre Channel	
N-MSA	150.00
Price Band 4	150.00
Price Band 5	150.00
Price Band 6	150.00
Protected FDDI	
N-MSA	150.00
Price Band 4	150.00
Price Band 5	150.00
Price Band 6	150.00
Protected ISC	
N-MSA	150.00
Price Band 4	150.00
Price Band 5	150.00
Price Band 6	150.00

Service availability limited. Refer to # footnote on Page 7-117.

© 2022 Frontier Communications Parent, Inc. All rights reserved

7. Special Access Service (Cont'd)

7.5 Rates and Charges (Cont'd)

7.5.24 Dedicated SONET Optical Transport Service# (Cont'd)

(G) Partial Ring Channel Mapping
Per Channel Mapped on a Partial Ring (Cont'd)

Interface Type	Category I Nonrecurring Charge
Protected ISC3	
N-MSA	$150.00
Price Band 4	150.00
Price Band 5	150.00
Price Band 6	150.00
Protected Fast Ethernet	
N-MSA	150.00
Price Band 4	150.00
Price Band 5	150.00
Price Band 6	150.00
Protected Gigabit Ethernet	
N-MSA	150.00
Price Band 4	150.00
Price Band 5	150.00
Price Band 6	150.00
Protected 10 Gigabit Ethernet LAN-PHY/WAN-PHY	
N-MSA	150.00
Price Band 4	150.00
Price Band 5	150.00
Price Band 6	150.00
Protected D1 Video	
N-MSA	150.00
Price Band 4	150.00
Price Band 5	150.00
Price Band 6	150.00
Protected Multi-Port Facility	
N-MSA	150.00
Price Band 4	150.00
Price Band 5	150.00
Price Band 6	150.00

Service availability limited. Refer to # footnote on Page 7-117.

© 2022 Frontier Communications Parent, Inc. All rights reserved

7. Special Access Service (Cont'd)

7.5 Rates and Charges (Cont'd)

7.5.24 Dedicated SONET Optical Transport Service# (Cont'd)

(G) Partial Ring Channel Mapping
Per Channel Mapped on a Partial Ring (Cont'd)

Interface Type	Category I Nonrecurring Charge
Protected Multi-Port Channel	
ESCON	
N-MSA	$150.00
Price Band 4	150.00
Price Band 5	150.00
Price Band 6	150.00
Fibre Channel	
N-MSA	150.00
Price Band 4	150.00
Price Band 5	150.00
Price Band 6	150.00
FDDI	
N-MSA	150.00
Price Band 4	150.00
Price Band 5	150.00
Price Band 6	150.00
Fast Ethernet	
N-MSA	150.00
Price Band 4	150.00
Price Band 5	150.00
Price Band 6	150.00
D1 Video	
N-MSA	150.00
Price Band 4	150.00
Price Band 5	150.00
Price Band 6	150.00

Service availability limited. Refer to # footnote on Page 7-117.

© 2022 Frontier Communications Parent, Inc. All rights reserved

7. Special Access Service (Cont'd)

7.5 Rates and Charges (Cont'd)

7.5.24 Dedicated SONET Optical Transport Service# (Cont'd)

(G) Partial Ring Channel Mapping
Per Channel Mapped on a Partial Ring (Cont'd)

Interface Type	Category II Nonrecurring Charge
Unprotected SONET OC3/OC3c	
N-MSA	$150.00
Price Band 4	150.00
Price Band 5	150.00
Price Band 6	150.00
Unprotected SONET OC12/OC12c	
N-MSA	150.00
Price Band 4	150.00
Price Band 5	150.00
Price Band 6	150.00
Unprotected SONET OC48/OC48c	
N-MSA	150.00
Price Band 4	150.00
Price Band 5	150.00
Price Band 6	150.00
Unprotected SONET OC192/OC192c	
N-MSA	150.00
Price Band 4	150.00
Price Band 5	150.00
Price Band 6	150.00
Unprotected 1 Gbps FICON	
N-MSA	150.00
Price Band 4	150.00
Price Band 5	150.00
Price Band 6	150.00
Unprotected 2 Gbps FICON	
N-MSA	150.00
Price Band 4	150.00
Price Band 5	150.00
Price Band 6	150.00

Service availability limited. Refer to # footnote on Page 7-117.

© 2022 Frontier Communications Parent, Inc. All rights reserved

7. Special Access Service (Cont'd)

7.5 Rates and Charges (Cont'd)

7.5.24 Dedicated SONET Optical Transport Service# (Cont'd)

(G) Partial Ring Channel Mapping
Per Channel Mapped on a Partial Ring (Cont'd)

Interface Type	Category II Nonrecurring Charge
Unprotected 1 Gbps Fibre Channel	
N-MSA	$150.00
Price Band 4	150.00
Price Band 5	150.00
Price Band 6	150.00
Unprotected 2 Gbps Fibre Channel	
N-MSA	150.00
Price Band 4	150.00
Price Band 5	150.00
Price Band 6	150.00
Unprotected ETR/CLO	
N-MSA	150.00
Price Band 4	150.00
Price Band 5	150.00
Price Band 6	150.00
Unprotected FDDI	
N-MSA	150.00
Price Band 4	150.00
Price Band 5	150.00
Price Band 6	150.00
Unprotected ISC	
N-MSA	150.00
Price Band 4	150.00
Price Band 5	150.00
Price Band 6	150.00

Service availability limited. Refer to # footnote on Page 7-117.

© 2022 Frontier Communications Parent, Inc. All rights reserved

7. Special Access Service (Cont'd)

7.5 Rates and Charges (Cont'd)

7.5.24 Dedicated SONET Optical Transport Service# (Cont'd)

(G) Partial Ring Channel Mapping
Per Channel Mapped on a Partial Ring (Cont'd)

Interface Type	Category II Nonrecurring Charge
Unprotected ISC3	
N-MSA	$150.00
Price Band 4	150.00
Price Band 5	150.00
Price Band 6	150.00
Unprotected Fast Ethernet	
N-MSA	150.00
Price Band 4	150.00
Price Band 5	150.00
Price Band 6	150.00
Unprotected Gigabit Ethernet	
N-MSA	150.00
Price Band 4	150.00
Price Band 5	150.00
Price Band 6	150.00
Unprotected 10 Gigabit Ethernet LAN-PHY/WAN-PHY	
N-MSA	150.00
Price Band 4	150.00
Price Band 5	150.00
Price Band 6	150.00
Unprotected D1 Video	
N-MSA	150.00
Price Band 4	150.00
Price Band 5	150.00
Price Band 6	150.00

Service availability limited. Refer to # footnote on Page 7-117.

© 2022 Frontier Communications Parent, Inc. All rights reserved

7. Special Access Service (Cont'd)

7.5 Rates and Charges (Cont'd)

7.5.24 Dedicated SONET Optical Transport Service# (Cont'd)

(G) Partial Ring Channel Mapping
Per Channel Mapped on a Partial Ring (Cont'd)

Interface Type	Category II Nonrecurring Charge
Unprotected Multi-Port Facility	
N-MSA	$150.00
Price Band 4	150.00
Price Band 5	150.00
Price Band 6	150.00
Unprotected Multi-Port Channel	
ESCON	
N-MSA	150.00
Price Band 4	150.00
Price Band 5	150.00
Price Band 6	150.00
Fibre Channel	
N-MSA	150.00
Price Band 4	150.00
Price Band 5	150.00
Price Band 6	150.00
FDDI	
N-MSA	150.00
Price Band 4	150.00
Price Band 5	150.00
Price Band 6	150.00
Fast Ethernet	
N-MSA	150.00
Price Band 4	150.00
Price Band 5	150.00
Price Band 6	150.00
D1 Video	
N-MSA	150.00
Price Band 4	150.00
Price Band 5	150.00
Price Band 6	150.00

Service availability limited. Refer to # footnote on Page 7-117.

© 2022 Frontier Communications Parent, Inc. All rights reserved

7. Special Access Service (Cont'd)

7.5 Rates and Charges (Cont'd)

7.5.24 Dedicated SONET Optical Transport Service# (Cont'd)

(G) Partial Ring Channel Mapping
Per Channel Mapped on a Partial Ring (Cont'd)

Interface Type	Category II Nonrecurring Charge
Protected SONET OC3/OC3c	
N-MSA	$150.00
Price Band 4	150.00
Price Band 5	150.00
Price Band 6	150.00
Protected SONET OC12/OC12c	
N-MSA	150.00
Price Band 4	150.00
Price Band 5	150.00
Price Band 6	150.00
Protected SONET OC48/OC48c	
N-MSA	150.00
Price Band 4	150.00
Price Band 5	150.00
Price Band 6	150.00
Protected SONET OC192/OC192c	
N-MSA	150.00
Price Band 4	150.00
Price Band 5	150.00
Price Band 6	150.00
Protected 1 Gbps FICON	
N-MSA	150.00
Price Band 4	150.00
Price Band 5	150.00
Price Band 6	150.00

Service availability limited. Refer to # footnote on Page 7-117.

© 2022 Frontier Communications Parent, Inc. All rights reserved

7. Special Access Service (Cont'd)

7.5 Rates and Charges (Cont'd)

7.5.24 Dedicated SONET Optical Transport Service# (Cont'd)

(G) Partial Ring Channel Mapping
Per Channel Mapped on a Partial Ring (Cont'd)

Interface Type	Category II Nonrecurring Charge
Protected 2 Gbps FICON	
N-MSA	$150.00
Price Band 4	150.00
Price Band 5	150.00
Price Band 6	150.00
Protected 1 Gbps Fibre Channel	
N-MSA	150.00
Price Band 4	150.00
Price Band 5	150.00
Price Band 6	150.00
Protected 2 Gbps Fibre Channel	
N-MSA	150.00
Price Band 4	150.00
Price Band 5	150.00
Price Band 6	150.00
Protected FDDI	
N-MSA	150.00
Price Band 4	150.00
Price Band 5	150.00
Price Band 6	150.00
Protected ISC	
N-MSA	150.00
Price Band 4	150.00
Price Band 5	150.00
Price Band 6	150.00

Service availability limited. Refer to # footnote on Page 7-117.

© 2022 Frontier Communications Parent, Inc. All rights reserved

7. Special Access Service (Cont'd)

7.5 Rates and Charges (Cont'd)

7.5.24 Dedicated SONET Optical Transport Service# (Cont'd)

(G) Partial Ring Channel Mapping
Per Channel Mapped on a Partial Ring (Cont'd)

Interface Type	Category II Nonrecurring Charge
Protected ISC3	
N-MSA	$150.00
Price Band 4	150.00
Price Band 5	150.00
Price Band 6	150.00
Protected Fast Ethernet	
N-MSA	150.00
Price Band 4	150.00
Price Band 5	150.00
Price Band 6	150.00
Protected Gigabit Ethernet	
N-MSA	150.00
Price Band 4	150.00
Price Band 5	150.00
Price Band 6	150.00
Protected 10 Gigabit Ethernet LAN-PHY/WAN-PHY	
N-MSA	150.00
Price Band 4	150.00
Price Band 5	150.00
Price Band 6	150.00
Protected D1 Video	
N-MSA	150.00
Price Band 4	150.00
Price Band 5	150.00
Price Band 6	150.00
Protected Multi-Port Facility	
N-MSA	150.00
Price Band 4	150.00
Price Band 5	150.00
Price Band 6	150.00

Service availability limited. Refer to # footnote on Page 7-117.

© 2022 Frontier Communications Parent, Inc. All rights reserved

7. Special Access Service (Cont'd)

7.5 Rates and Charges (Cont'd)

7.5.24 Dedicated SONET Optical Transport Service# (Cont'd)

(G) Partial Ring Channel Mapping
Per Channel Mapped on a Partial Ring (Cont'd)

Interface Type	Category II Nonrecurring Charge
Protected Multi-Port Channel	
ESCON	
N-MSA	$150.00
Price Band 4	150.00
Price Band 5	150.00
Price Band 6	150.00
Fibre Channel	
N-MSA	150.00
Price Band 4	150.00
Price Band 5	150.00
Price Band 6	150.00
FDDI	
N-MSA	150.00
Price Band 4	150.00
Price Band 5	150.00
Price Band 6	150.00
Fast Ethernet	
N-MSA	150.00
Price Band 4	150.00
Price Band 5	150.00
Price Band 6	150.00
D1 Video	
N-MSA	150.00
Price Band 4	150.00
Price Band 5	150.00
Price Band 6	150.00

Service availability limited. Refer to # footnote on Page 7-117.

© 2022 Frontier Communications Parent, Inc. All rights reserved

7. Special Access Service (Cont'd)

7.5 Rates and Charges (Cont'd)

7.5.24 Dedicated SONET Optical Transport Service# (Cont'd)

(H) Network Management Methods

(1) Customer Service Management Optional Feature (CSM)

			Monthly Rate
(a)	CSM, per full or partial ring		
	3 year		$450.00
	5 year		450.00
	7 year		450.00
(b)	Customized reports		ICB
			Nonrecurring Charge
(c)	Node Setup, per primary or expansion node on the ring equipped during initial establishment		$200.00
	Initial CSM Setup, first partition with up to 6 users	500.00	
(e)	Setup of Additional Partition		500.00
(f)	Setup of Additional Users, up to 6 additional users		350.00
(g)	Add/Remove Node, per primary or expansion node added to, or removed from, the CSM ring subsequent to initial establishment		200.00
(h)	Consultation and Support, each 30 minutes or fraction thereof	100.00	
(i)	Change in Network Management Method, from CSM to DTM, per node		200.00

Service availability limited. Refer to # footnote on Page 7-117.

© 2022 Frontier Communications Parent, Inc. All rights reserved

7. Special Access Service (Cont'd)

7.5 Rates and Charges (Cont'd)

7.5.24 Dedicated SONET Optical Transport Service# (Cont'd)

(H) Network Management Methods (Cont'd)

(2) Direct TL1 Monitoring Optional Feature (DTM)

		Monthly Rate
(a)	DTM, per full or partial ring	
	3 year	$450.00
	5 year	450.00
	7 year	450.00

		Nonrecurring Charge
(b)	Node Setup, per primary or expansion node on the ring equipped during initial establishment	$200.00
(c)	DTM Setup	500.00
	Add/Remove Node, per primary or expansion node added to, or removed from, the DTM ring subsequent to initial establishment	200.00
(e)	Consultation and Support, each 30 minutes or fraction thereof 100.00	
(f)	Change in Network Management Method, from DTM to CSM, per node	200.00

Service availability limited. Refer to # footnote on Page 7-117.

© 2022 Frontier Communications Parent, Inc. All rights reserved

7. Special Access Service (Cont'd)

7.5 Rates and Charges (Cont'd)

7.5.25 Ethernet Private Line#

(A) On-Net Channel Extensions
- Per Channel Extension

(1) Protected

(a) 1-year Commitment Period/Term Plan

Interface Type	Monthly Rate	Nonrecurring Charge
10 Mbps Ethernet (Full Rate)		
N-MSA	$1,200.00	$1.00
Price Band 4	1,200.00	1.00
Price Band 5	1,200.00	1.00
Price Band 6	1,200.00	1.00
100 Mbps Ethernet (50 Mbps)		
N-MSA	1,920.00	1.00
Price Band 4	1,920.00	1.00
Price Band 5	1,920.00	1.00
Price Band 6	1,920.00	1.00
100 Mbps Ethernet (Full Rate)		
N-MSA	2,630.00	1.00
Price Band 4	2,630.00	1.00
Price Band 5	2,630.00	1.00
Price Band 6	2,630.00	1.00
1 Gbps Ethernet (50 Mbps)		
N-MSA	1,920.00	1.00
Price Band 4	1,920.00	1.00
Price Band 5	1,920.00	1.00
Price Band 6	1,920.00	1.00
1 Gbps Ethernet (150 Mbps)		
N-MSA	2,790.00	1.00
Price Band 4	2,790.00	1.00
Price Band 5	2,790.00	1.00
Price Band 6	2,790.00	1.00

Service availability limited. Refer to # footnote on Page 7-159.

© 2022 Frontier Communications Parent, Inc. All rights reserved

7. Special Access Service (Cont'd)

7.5 Rates and Charges (Cont'd)

7.5.25 Ethernet Private Line# (Cont'd)

(A) On-Net Channel Extensions (Cont'd)
- Per Channel Extension

(1) Protected (Cont'd)

(a) 1-year Commitment Period/Term Plan (Cont'd)

Interface Type	Monthly Rate	Nonrecurring Charge
1 Gbps Ethernet (300 Mbps)		
N-MSA	$3,660.00	$1.00
Price Band 4	3,660.00	1.00
Price Band 5	3,660.00	1.00
Price Band 6	3,660.00	1.00
1 Gbps Ethernet (450 Mbps)		
N-MSA	4,530.00	1.00
Price Band 4	4,530.00	1.00
Price Band 5	4,530.00	1.00
Price Band 6	4,530.00	1.00
1 Gbps Ethernet (600 Mbps)		
N-MSA	5,400.00	1.00
Price Band 4	5,400.00	1.00
Price Band 5	5,400.00	1.00
Price Band 6	5,400.00	1.00
1 Gbps Ethernet (Full Rate)		
N-MSA	7,560.00	1.00
Price Band 4	7,560.00	1.00
Price Band 5	7,560.00	1.00
Price Band 6	7,560.00	1.00
1 Gbps Fibre Channel (Full Rate)		
N-MSA	8,320.00	1.00
Price Band 4	8,320.00	1.00
Price Band 5	8,320.00	1.00
Price Band 6	8,320.00	1.00
1 Gbps FiCON (Full Rate)		
N-MSA	8,320.00	1.00
Price Band 4	8,320.00	1.00
Price Band 5	8,320.00	1.00
Price Band 6	8,320.00	1.00

Service availability limited. Refer to # footnote on Page 7-159.

© 2022 Frontier Communications Parent, Inc. All rights reserved

7. Special Access Service (Cont'd)

7.5 Rates and Charges (Cont'd)

7.5.25 Ethernet Private Line# (Cont'd)

(A) On-Net Channel Extensions (Cont'd)
- Per Channel Extension

(1) Protected (Cont'd)

(a) 1-year Commitment Period/Term Plan (Cont'd)

Interface Type	Monthly Rate	Nonrecurring Charge
(Mapped to SONET at one end)		
10 Mbps Ethernet (Full Rate) to STS1		
N-MSA	$1,200.00	$1.00
Price Band 4	1,200.00	1.00
Price Band 5	1,200.00	1.00
Price Band 6	1,200.00	1.00
100 Mbps Ethernet (50 Mbps) to STS1		
N-MSA	1,920.00	1.00
Price Band 4	1,920.00	1.00
Price Band 5	1,920.00	1.00
Price Band 6	1,920.00	1.00
100 Mbps Ethernet (Full Rate) to OC3c		
N-MSA	2,630.00	1.00
Price Band 4	2,630.00	1.00
Price Band 5	2,630.00	1.00
Price Band 6	2,630.00	1.00
1 Gbps Ethernet (50 Mbps) to OC3		
N-MSA	1,920.00	1.00
Price Band 4	1,920.00	1.00
Price Band 5	1,920.00	1.00
Price Band 6	1,920.00	1.00
1 Gbps Ethernet (150 Mbps) to OC3		
N-MSA	2,790.00	1.00
Price Band 4	2,790.00	1.00
Price Band 5	2,790.00	1.00
Price Band 6	2,790.00	1.00
1 Gbps Ethernet (300 Mbps) to OC12		
N-MSA	3,660.00	1.00
Price Band 4	3,660.00	1.00
Price Band 5	3,660.00	1.00
Price Band 6	3,660.00	1.00

Service availability limited. Refer to # footnote on Page 7-159.

© 2022 Frontier Communications Parent, Inc. All rights reserved

7. Special Access Service (Cont'd)

7.5 Rates and Charges (Cont'd)

7.5.25 Ethernet Private Line# (Cont'd)

(A) On-Net Channel Extensions (Cont'd)
- Per Channel Extension

(1) Protected (Cont'd)

(a) 1-year Commitment Period/Term Plan (Cont'd)

Interface Type	Monthly Rate	Nonrecurring Charge
(Mapped to SONET at one end) (Cont'd)		
1 Gbps Ethernet (450 Mbps) to OC12		
N-MSA	$4,530.00	$1.00
Price Band 4	4,530.00	1.00
Price Band 5	4,530.00	1.00
Price Band 6	4,530.00	1.00
1 Gbps Ethernet (600 Mbps) to OC12		
N-MSA	5,400.00	1.00
Price Band 4	5,400.00	1.00
Price Band 5	5,400.00	1.00
Price Band 6	5,400.00	1.00
1 Gbps Ethernet (600 Mbps) mapped to OC12c		
N-MSA	5,400.00	1.00
Price Band 4	5,400.00	1.00
Price Band 5	5,400.00	1.00
Price Band 6	5,400.00	1.00
1 Gbps Ethernet (Full Rate) to OC48		
N-MSA	7,560.00	1.00
Price Band 4	7,560.00	1.00
Price Band 5	7,560.00	1.00
Price Band 6	7,560.00	1.00
1 Gbps Fibre Channel (Full Rate) to OC48		
N-MSA	8,320.00	1.00
Price Band 4	8,320.00	1.00
Price Band 5	8,320.00	1.00
Price Band 6	8,320.00	1.00
1 Gbps FiCON (Full Rate) to OC48		
N-MSA	8,320.00	1.00
Price Band 4	8,320.00	1.00
Price Band 5	8,320.00	1.00
Price Band 6	8,320.00	1.00

Service availability limited. Refer to # footnote on Page 7-159.

© 2022 Frontier Communications Parent, Inc. All rights reserved

7. Special Access Service (Cont'd)

7.5 Rates and Charges (Cont'd)

7.5.25 Ethernet Private Line# (Cont'd)

(A) On-Net Channel Extensions (Cont'd)
- Per Channel Extension

(1) Protected (Cont'd)

(b) 3-year Commitment Period/Term Plan

Interface Type	Monthly Rate	Nonrecurring Charge
10 Mbps Ethernet (Full Rate)		
N-MSA	$ 900.00	$1.00
Price Band 4	900.00	1.00
Price Band 5	900.00	1.00
Price Band 6	900.00	1.00
100 Mbps Ethernet (50 Mbps)		
N-MSA	1,470.00	1.00
Price Band 4	1,470.00	1.00
Price Band 5	1,470.00	1.00
Price Band 6	1,470.00	1.00
100 Mbps Ethernet (Full Rate)		
N-MSA	2,030.00	1.00
Price Band 4	2,030.00	1.00
Price Band 5	2,030.00	1.00
Price Band 6	2,030.00	1.00
1 Gbps Ethernet (50 Mbps)		
N-MSA	1,470.00	1.00
Price Band 4	1,470.00	1.00
Price Band 5	1,470.00	1.00
Price Band 6	1,470.00	1.00
1 Gbps Ethernet (150 Mbps)		
N-MSA	2,310.00	1.00
Price Band 4	2,310.00	1.00
Price Band 5	2,310.00	1.00
Price Band 6	2,310.00	1.00

Service availability limited. Refer to # footnote on Page 7-159.

© 2022 Frontier Communications Parent, Inc. All rights reserved

7. Special Access Service (Cont'd)

7.5 Rates and Charges (Cont'd)

7.5.25 Ethernet Private Line# (Cont'd)

(A) On-Net Channel Extensions (Cont'd)
- Per Channel Extension

(1) Protected (Cont'd)

(b) 3-year Commitment Period/Term Plan (Cont'd)

Interface Type	Monthly Rate	Nonrecurring Charge
1 Gbps Ethernet (300 Mbps)		
N-MSA	$3,140.00	$1.00
Price Band 4	3,140.00	1.00
Price Band 5	3,140.00	1.00
Price Band 6	3,140.00	1.00
1 Gbps Ethernet (450 Mbps)		
N-MSA	3,970.00	1.00
Price Band 4	3,970.00	1.00
Price Band 5	3,970.00	1.00
Price Band 6	3,970.00	1.00
1 Gbps Ethernet (600 Mbps)		
N-MSA	4,800.00	1.00
Price Band 4	4,800.00	1.00
Price Band 5	4,800.00	1.00
Price Band 6	4,800.00	1.00
1 Gbps Ethernet (Full Rate)		
N-MSA	6,720.00	1.00
Price Band 4	6,720.00	1.00
Price Band 5	6,720.00	1.00
Price Band 6	6,720.00	1.00
1 Gbps Fibre Channel (Full Rate)		
N-MSA	7,400.00	1.00
Price Band 4	7,400.00	1.00
Price Band 5	7,400.00	1.00
Price Band 6	7,400.00	1.00
1 Gbps FiCON (Full Rate)		
N-MSA	7,400.00	1.00
Price Band 4	7,400.00	1.00
Price Band 5	7,400.00	1.00
Price Band 6	7,400.00	1.00

Service availability limited. Refer to # footnote on Page 7-159.

© 2022 Frontier Communications Parent, Inc. All rights reserved

7. Special Access Service (Cont'd)

7.5 Rates and Charges (Cont'd)

7.5.25 Ethernet Private Line# (Cont'd)

(A) On-Net Channel Extensions (Cont'd)
- Per Channel Extension

(1) Protected (Cont'd)

(b) 3-year Commitment Period/Term Plan (Cont'd)

Interface Type	Monthly Rate	Nonrecurring Charge
(Mapped to SONET at one end)		
10 Mbps Ethernet (Full Rate) to STS1		
N-MSA	$ 900.00	$1.00
Price Band 4	900.00	1.00
Price Band 5	900.00	1.00
Price Band 6	900.00	1.00
100 Mbps Ethernet (50 Mbps) to STS1		
N-MSA	1,470.00	1.00
Price Band 4	1,470.00	1.00
Price Band 5	1,470.00	1.00
Price Band 6	1,470.00	1.00
100 Mbps Ethernet (Full Rate) to OC3c		
N-MSA	2,030.00	1.00
Price Band 4	2,030.00	1.00
Price Band 5	2,030.00	1.00
Price Band 6	2,030.00	1.00
1 Gbps Ethernet (50 Mbps) to OC3		
N-MSA	1,470.00	1.00
Price Band 4	1,470.00	1.00
Price Band 5	1,470.00	1.00
Price Band 6	1,470.00	1.00
1 Gbps Ethernet (150 Mbps) to OC3		
N-MSA	2,310.00	1.00
Price Band 4	2,310.00	1.00
Price Band 5	2,310.00	1.00
Price Band 6	2,310.00	1.00
1 Gbps Ethernet (300 Mbps) to OC12		
N-MSA	3,140.00	1.00
Price Band 4	3,140.00	1.00
Price Band 5	3,140.00	1.00
Price Band 6	3,140.00	1.00

Service availability limited. Refer to # footnote on Page 7-159.

© 2022 Frontier Communications Parent, Inc. All rights reserved

7. Special Access Service (Cont'd)

7.5 Rates and Charges (Cont'd)

7.5.25 Ethernet Private Line# (Cont'd)

(A) On-Net Channel Extensions (Cont'd)
- Per Channel Extension

(1) Protected (Cont'd)

(b) 3-year Commitment Period/Term Plan (Cont'd)

Interface Type	Monthly Rate	Nonrecurring Charge
(Mapped to SONET at one end) (Cont'd)		
1 Gbps Ethernet (450 Mbps) to OC12		
N-MSA	$3,970.00	$1.00
Price Band 4	3,970.00	1.00
Price Band 5	3,970.00	1.00
Price Band 6	3,970.00	1.00
1 Gbps Ethernet (600 Mbps) to OC12		
N-MSA	4,800.00	1.00
Price Band 4	4,800.00	1.00
Price Band 5	4,800.00	1.00
Price Band 6	4,800.00	1.00
1 Gbps Ethernet (600 Mbps) to OC12c		
N-MSA	4,800.00	1.00
Price Band 4	4,800.00	1.00
Price Band 5	4,800.00	1.00
Price Band 6	4,800.00	1.00
1 Gbps Ethernet (Full Rate) to OC48		
N-MSA	6,720.00	1.00
Price Band 4	6,720.00	1.00
Price Band 5	6,720.00	1.00
Price Band 6	6,720.00	1.00
1 Gbps Fibre Channel (Full Rate) to OC48		
N-MSA	7,400.00	1.00
Price Band 4	7,400.00	1.00
Price Band 5	7,400.00	1.00
Price Band 6	7,400.00	1.00
1 Gbps FiCON (Full Rate) to OC48		
N-MSA	7,400.00	1.00
Price Band 4	7,400.00	1.00
Price Band 5	7,400.00	1.00
Price Band 6	7,400.00	1.00

Service availability limited. Refer to # footnote on Page 7-159.

© 2022 Frontier Communications Parent, Inc. All rights reserved

7. Special Access Service (Cont'd)

7.5 Rates and Charges (Cont'd)

7.5.25 Ethernet Private Line# (Cont'd)

(A) On-Net Channel Extensions (Cont'd)
- Per Channel Extension

(1) Protected (Cont'd)

(c) 5-year Commitment Period/Term Plan

Interface Type	Monthly Rate	Nonrecurring Charge
10 Mbps Ethernet (Full Rate)		
N-MSA	$ 720.00	$1.00
Price Band 4	720.00	1.00
Price Band 5	720.00	1.00
Price Band 6	720.00	1.00
100 Mbps Ethernet (50 Mbps)		
N-MSA	1,200.00	1.00
Price Band 4	1,200.00	1.00
Price Band 5	1,200.00	1.00
Price Band 6	1,200.00	1.00
100 Mbps Ethernet (Full Rate)		
N-MSA	1,680.00	1.00
Price Band 4	1,680.00	1.00
Price Band 5	1,680.00	1.00
Price Band 6	1,680.00	1.00
1 Gbps Ethernet (50 Mbps)		
N-MSA	1,200.00	1.00
Price Band 4	1,200.00	1.00
Price Band 5	1,200.00	1.00
Price Band 6	1,200.00	1.00
1 Gbps Ethernet (150 Mbps)		
N-MSA	2,000.00	1.00
Price Band 4	2,000.00	1.00
Price Band 5	2,000.00	1.00
Price Band 6	2,000.00	1.00

Service availability limited. Refer to # footnote on Page 7-159.

© 2022 Frontier Communications Parent, Inc. All rights reserved

7. Special Access Service (Cont'd)

7.5 Rates and Charges (Cont'd)

7.5.25 Ethernet Private Line# (Cont'd)

(A) On-Net Channel Extensions (Cont'd)
- Per Channel Extension

(1) Protected (Cont'd)

(c) 5-year Commitment Period/Term Plan (Cont'd)

Interface Type	Monthly Rate	Nonrecurring Charge
1 Gbps Ethernet (300 Mbps)		
N-MSA	$2,790.00	$1.00
Price Band 4	2,790.00	1.00
Price Band 5	2,790.00	1.00
Price Band 6	2,790.00	1.00
1 Gbps Ethernet (450 Mbps)		
N-MSA	3,590.00	1.00
Price Band 4	3,590.00	1.00
Price Band 5	3,590.00	1.00
Price Band 6	3,590.00	1.00
1 Gbps Ethernet (600 Mbps)		
N-MSA	4,380.00	1.00
Price Band 4	4,380.00	1.00
Price Band 5	4,380.00	1.00
Price Band 6	4,380.00	1.00
1 Gbps Ethernet (Full Rate)		
N-MSA	6,140.00	1.00
Price Band 4	6,140.00	1.00
Price Band 5	6,140.00	1.00
Price Band 6	6,140.00	1.00
1 Gbps Fibre Channel (Full Rate)		
N-MSA	6,760.00	1.00
Price Band 4	6,760.00	1.00
Price Band 5	6,760.00	1.00
Price Band 6	6,760.00	1.00
1 Gbps FiCON (Full Rate)		
N-MSA	6,760.00	1.00
Price Band 4	6,760.00	1.00
Price Band 5	6,760.00	1.00
Price Band 6	6,760.00	1.00

Service availability limited. Refer to # footnote on Page 7-159.

© 2022 Frontier Communications Parent, Inc. All rights reserved

7. Special Access Service (Cont'd)

7.5 Rates and Charges (Cont'd)

7.5.25 Ethernet Private Line# (Cont'd)

(A) On-Net Channel Extensions (Cont'd)
- Per Channel Extension

(1) Protected (Cont'd)

(c) 5-year Commitment Period/Term Plan (Cont'd)

Interface Type	Monthly Rate	Nonrecurring Charge
(Mapped to SONET at one end)		
10 Mbps Ethernet (Full Rate) to STS1		
N-MSA	$ 720.00	$1.00
Price Band 4	720.00	1.00
Price Band 5	720.00	1.00
Price Band 6	720.00	1.00
100 Mbps Ethernet (50 Mbps) to STS1		
N-MSA	1,200.00	1.00
Price Band 4	1,200.00	1.00
Price Band 5	1,200.00	1.00
Price Band 6	1,200.00	1.00
100 Mbps Ethernet (Full Rate) to OC3c		
N-MSA	1,680.00	1.00
Price Band 4	1,680.00	1.00
Price Band 5	1,680.00	1.00
Price Band 6	1,680.00	1.00
1 Gbps Ethernet (50 Mbps) to OC3		
N-MSA	1,200.00	1.00
Price Band 4	1,200.00	1.00
Price Band 5	1,200.00	1.00
Price Band 6	1,200.00	1.00
1 Gbps Ethernet (150 Mbps) to OC3		
N-MSA	2,000.00	1.00
Price Band 4	2,000.00	1.00
Price Band 5	2,000.00	1.00
Price Band 6	2,000.00	1.00
1 Gbps Ethernet (300 Mbps) to OC12		
N-MSA	2,790.00	1.00
Price Band 4	2,790.00	1.00
Price Band 5	2,790.00	1.00
Price Band 6	2,790.00	1.00

Service availability limited. Refer to # footnote on Page 7-159.

© 2022 Frontier Communications Parent, Inc. All rights reserved

7. Special Access Service (Cont'd)

7.5 Rates and Charges (Cont'd)

7.5.25 Ethernet Private Line# (Cont'd)

(A) On-Net Channel Extensions (Cont'd)
- Per Channel Extension

(1) Protected (Cont'd)

(c) 5-year Commitment Period/Term Plan (Cont'd)

Interface Type	Monthly Rate	Nonrecurring Charge
(Mapped to SONET at one end) (Cont'd)		
1 Gbps Ethernet (450 Mbps) to OC12		
N-MSA	$3,590.00	$1.00
Price Band 4	3,590.00	1.00
Price Band 5	3,590.00	1.00
Price Band 6	3,590.00	1.00
1 Gbps Ethernet (600 Mbps) to OC12		
N-MSA	4,380.00	1.00
Price Band 4	4,380.00	1.00
Price Band 5	4,380.00	1.00
Price Band 6	4,380.00	1.00
1 Gbps Ethernet (600 Mbps) to OC12c		
N-MSA	4,380.00	1.00
Price Band 4	4,380.00	1.00
Price Band 5	4,380.00	1.00
Price Band 6	4,380.00	1.00
1 Gbps Ethernet (Full Rate) to OC48		
N-MSA	6,140.00	1.00
Price Band 4	6,140.00	1.00
Price Band 5	6,140.00	1.00
Price Band 6	6,140.00	1.00
1 Gbps Fibre Channel (Full Rate) to OC48		
N-MSA	6,760.00	1.00
Price Band 4	6,760.00	1.00
Price Band 5	6,760.00	1.00
Price Band 6	6,760.00	1.00
1 Gbps FiCON (Full Rate) to OC48		
N-MSA	6,760.00	1.00
Price Band 4	6,760.00	1.00
Price Band 5	6,760.00	1.00
Price Band 6	6,760.00	1.00

Service availability limited. Refer to # footnote on Page 7-159.

© 2022 Frontier Communications Parent, Inc. All rights reserved

7. Special Access Service (Cont'd)

7.5 Rates and Charges (Cont'd)

7.5.25 Ethernet Private Line# (Cont'd)

(A) On-Net Channel Extensions (Cont'd)
- Per Channel Extension

(1) Protected (Cont'd)

7-year Commitment Period/Term Plan

Interface Type	Monthly Rate	Nonrecurring Charge
10 Mbps Ethernet (Full Rate)		
N-MSA	$ 600.00	$1.00
Price Band 4	600.00	1.00
Price Band 5	600.00	1.00
Price Band 6	600.00	1.00
100 Mbps Ethernet (50 Mbps)		
N-MSA	1,020.00	1.00
Price Band 4	1,020.00	1.00
Price Band 5	1,020.00	1.00
Price Band 6	1,020.00	1.00
100 Mbps Ethernet (Full Rate)		
N-MSA	1,430.00	1.00
Price Band 4	1,430.00	1.00
Price Band 5	1,430.00	1.00
Price Band 6	1,430.00	1.00
1 Gbps Ethernet (50 Mbps)		
N-MSA	1,020.00	1.00
Price Band 4	1,020.00	1.00
Price Band 5	1,020.00	1.00
Price Band 6	1,020.00	1.00
1 Gbps Ethernet (150 Mbps)		
N-MSA	1,840.00	1.00
Price Band 4	1,840.00	1.00
Price Band 5	1,840.00	1.00
Price Band 6	1,840.00	1.00

Service availability limited. Refer to # footnote on Page 7-159.

© 2022 Frontier Communications Parent, Inc. All rights reserved

7. Special Access Service (Cont'd)

7.5 Rates and Charges (Cont'd)

7.5.25 Ethernet Private Line# (Cont'd)

(A) On-Net Channel Extensions (Cont'd)
- Per Channel Extension

(1) Protected (Cont'd)

7-year Commitment Period/Term Plan (Cont'd)

Interface Type	Monthly Rate	Nonrecurring Charge
1 Gbps Ethernet (300 Mbps)		
N-MSA	$2,660.00	$1.00
Price Band 4	2,660.00	1.00
Price Band 5	2,660.00	1.00
Price Band 6	2,660.00	1.00
1 Gbps Ethernet (450 Mbps)		
N-MSA	3,480.00	1.00
Price Band 4	3,480.00	1.00
Price Band 5	3,480.00	1.00
Price Band 6	3,480.00	1.00
1 Gbps Ethernet (600 Mbps)		
N-MSA	4,300.00	1.00
Price Band 4	4,300.00	1.00
Price Band 5	4,300.00	1.00
Price Band 6	4,300.00	1.00
1 Gbps Ethernet (Full Rate)		
N-MSA	6,020.00	1.00
Price Band 4	6,020.00	1.00
Price Band 5	6,020.00	1.00
Price Band 6	6,020.00	1.00
1 Gbps Fibre Channel (Full Rate)		
N-MSA	6,630.00	1.00
Price Band 4	6,630.00	1.00
Price Band 5	6,630.00	1.00
Price Band 6	6,630.00	1.00
1 Gbps FiCON (Full Rate)		
N-MSA	6,630.00	1.00
Price Band 4	6,630.00	1.00
Price Band 5	6,630.00	1.00
Price Band 6	6,630.00	1.00

Service availability limited. Refer to # footnote on Page 7-159.

© 2022 Frontier Communications Parent, Inc. All rights reserved

7. Special Access Service (Cont'd)

7.5 Rates and Charges (Cont'd)

7.5.25 Ethernet Private Line# (Cont'd)

(A) On-Net Channel Extensions (Cont'd)
- Per Channel Extension

(1) Protected (Cont'd)

7-year Commitment Period/Term Plan (Cont'd)

Interface Type	Monthly Rate	Nonrecurring Charge
(Mapped to SONET at one end)		
10 Mbps Ethernet (Full Rate) to STS1		
N-MSA	$ 600.00	$1.00
Price Band 4	600.00	1.00
Price Band 5	600.00	1.00
Price Band 6	600.00	1.00
100 Mbps Ethernet (50 Mbps) to STS1		
N-MSA	1,020.00	1.00
Price Band 4	1,020.00	1.00
Price Band 5	1,020.00	1.00
Price Band 6	1,020.00	1.00
100 Mbps Ethernet (Full Rate) to OC3c		
N-MSA	1,430.00	1.00
Price Band 4	1,430.00	1.00
Price Band 5	1,430.00	1.00
Price Band 6	1,430.00	1.00
1 Gbps Ethernet (50 Mbps) to OC3		
N-MSA	1,020.00	1.00
Price Band 4	1,020.00	1.00
Price Band 5	1,020.00	1.00
Price Band 6	1,020.00	1.00
1 Gbps Ethernet (150 Mbps) to OC3		
N-MSA	1,840.00	1.00
Price Band 4	1,840.00	1.00
Price Band 5	1,840.00	1.00
Price Band 6	1,840.00	1.00
1 Gbps Ethernet (300 Mbps) to OC12		
N-MSA	2,660.00	1.00
Price Band 4	2,660.00	1.00
Price Band 5	2,660.00	1.00
Price Band 6	2,660.00	1.00

Service availability limited. Refer to # footnote on Page 7-159.

© 2022 Frontier Communications Parent, Inc. All rights reserved

7. Special Access Service (Cont'd)

7.5 Rates and Charges (Cont'd)

7.5.25 Ethernet Private Line# (Cont'd)

(A) On-Net Channel Extensions (Cont'd)
- Per Channel Extension

(1) Protected (Cont'd)

7-year Commitment Period/Term Plan (Cont'd)

Interface Type	Monthly Rate	Nonrecurring Charge
(Mapped to SONET at one end) (Cont'd)		
1 Gbps Ethernet (450 Mbps) to OC12		
N-MSA	$3,480.00	$1.00
Price Band 4	3,480.00	1.00
Price Band 5	3,480.00	1.00
Price Band 6	3,480.00	1.00
1 Gbps Ethernet (600 Mbps) to OC12		
N-MSA	4,300.00	1.00
Price Band 4	4,300.00	1.00
Price Band 5	4,300.00	1.00
Price Band 6	4,300.00	1.00
1 Gbps Ethernet (600 Mbps) to OC12c		
N-MSA	4,300.00	1.00
Price Band 4	4,300.00	1.00
Price Band 5	4,300.00	1.00
Price Band 6	4,300.00	1.00
1 Gbps Ethernet (Full Rate) to OC48		
N-MSA	6,020.00	1.00
Price Band 4	6,020.00	1.00
Price Band 5	6,020.00	1.00
Price Band 6	6,020.00	1.00
1 Gbps Fibre Channel (Full Rate) to OC48		
N-MSA	6,630.00	1.00
Price Band 4	6,630.00	1.00
Price Band 5	6,630.00	1.00
Price Band 6	6,630.00	1.00
1 Gbps FiCON (Full Rate) to OC48		
N-MSA	6,630.00	1.00
Price Band 4	6,630.00	1.00
Price Band 5	6,630.00	1.00
Price Band 6	6,630.00	1.00

Service availability limited. Refer to # footnote on Page 7-159.

© 2022 Frontier Communications Parent, Inc. All rights reserved

7. Special Access Service (Cont'd)

7.5 Rates and Charges (Cont'd)

7.5.25 Ethernet Private Line# (Cont'd)

(A) On-Net Channel Extensions (Cont'd)
- Per Channel Extension

(2) Unprotected

(a) 1-year Commitment Period/Term Plan

Interface Type	Monthly Rate	Nonrecurring Charge
10 Mbps Ethernet (Full Rate)		
N-MSA	$ 900.00	$1.00
Price Band 4	900.00	1.00
Price Band 5	900.00	1.00
Price Band 6	900.00	1.00
100 Mbps Ethernet (50 Mbps)		
N-MSA	1,470.00	1.00
Price Band 4	1,470.00	1.00
Price Band 5	1,470.00	1.00
Price Band 6	1,470.00	1.00
100 Mbps Ethernet (Full Rate)		
N-MSA	2,030.00	1.00
Price Band 4	2,030.00	1.00
Price Band 5	2,030.00	1.00
Price Band 6	2,030.00	1.00
1 Gbps Ethernet (50 Mbps)		
N-MSA	1,470.00	1.00
Price Band 4	1,470.00	1.00
Price Band 5	1,470.00	1.00
Price Band 6	1,470.00	1.00
1 Gbps Ethernet (150 Mbps)		
N-MSA	2,160.00	1.00
Price Band 4	2,160.00	1.00
Price Band 5	2,160.00	1.00
Price Band 6	2,160.00	1.00

Service availability limited. Refer to # footnote on Page 7-159.

© 2022 Frontier Communications Parent, Inc. All rights reserved

7. Special Access Service (Cont'd)

7.5 Rates and Charges (Cont'd)

7.5.25 Ethernet Private Line# (Cont'd)

(A) On-Net Channel Extensions (Cont'd)
- Per Channel Extension

(2) Unprotected (Cont'd)

(a) 1-year Commitment Period/Term Plan (Cont'd)

Interface Type	Monthly Rate	Nonrecurring Charge
1 Gbps Ethernet (300 Mbps)		
N-MSA	$2,840.00	$1.00
Price Band 4	2,840.00	1.00
Price Band 5	2,840.00	1.00
Price Band 6	2,840.00	1.00
1 Gbps Ethernet (450 Mbps)		
N-MSA	3,520.00	1.00
Price Band 4	3,520.00	1.00
Price Band 5	3,520.00	1.00
Price Band 6	3,520.00	1.00
1 Gbps Ethernet (600 Mbps)		
N-MSA	4,200.00	1.00
Price Band 4	4,200.00	1.00
Price Band 5	4,200.00	1.00
Price Band 6	4,200.00	1.00
1 Gbps Ethernet (Full Rate)		
N-MSA	5,880.00	1.00
Price Band 4	5,880.00	1.00
Price Band 5	5,880.00	1.00
Price Band 6	5,880.00	1.00
1 Gbps Fibre Channel (Full Rate)		
N-MSA	6,470.00	1.00
Price Band 4	6,470.00	1.00
Price Band 5	6,470.00	1.00
Price Band 6	6,470.00	1.00
1 Gbps FiCON (Full Rate)		
N-MSA	6,470.00	1.00
Price Band 4	6,470.00	1.00
Price Band 5	6,470.00	1.00
Price Band 6	6,470.00	1.00

Service availability limited. Refer to # footnote on Page 7-159.

© 2022 Frontier Communications Parent, Inc. All rights reserved

7. Special Access Service (Cont'd)

7.5 Rates and Charges (Cont'd)

7.5.25 Ethernet Private Line# (Cont'd)

(A) On-Net Channel Extensions (Cont'd)
- Per Channel Extension

(2) Unprotected (Cont'd)

(a) 1-year Commitment Period/Term Plan (Cont'd)

Interface Type	Monthly Rate	Nonrecurring Charge
(Mapped to SONET at one end)		
10 Mbps Ethernet (Full Rate) to STS1		
N-MSA	$ 900.00	$1.00
Price Band 4	900.00	1.00
Price Band 5	900.00	1.00
Price Band 6	900.00	1.00
100 Mbps Ethernet (50 Mbps) to STS1		
N-MSA	1,470.00	1.00
Price Band 4	1,470.00	1.00
Price Band 5	1,470.00	1.00
Price Band 6	1,470.00	1.00
100 Mbps Ethernet (Full Rate) to OC3c		
N-MSA	2,030.00	1.00
Price Band 4	2,030.00	1.00
Price Band 5	2,030.00	1.00
Price Band 6	2,030.00	1.00
1 Gbps Ethernet (50 Mbps) to OC3		
N-MSA	1,470.00	1.00
Price Band 4	1,470.00	1.00
Price Band 5	1,470.00	1.00
Price Band 6	1,470.00	1.00
1 Gbps Ethernet (150 Mbps) to OC3		
N-MSA	2,160.00	1.00
Price Band 4	2,160.00	1.00
Price Band 5	2,160.00	1.00
Price Band 6	2,160.00	1.00
1 Gbps Ethernet (300 Mbps) to OC12		
N-MSA	2,840.00	1.00
Price Band 4	2,840.00	1.00
Price Band 5	2,840.00	1.00
Price Band 6	2,840.00	1.00

Service availability limited. Refer to # footnote on Page 7-159.

© 2022 Frontier Communications Parent, Inc. All rights reserved

7. Special Access Service (Cont'd)

7.5 Rates and Charges (Cont'd)

7.5.25 Ethernet Private Line# (Cont'd)

(A) On-Net Channel Extensions (Cont'd)
- Per Channel Extension

(2) Unprotected (Cont'd)

(a) 1-year Commitment Period/Term Plan (Cont'd)

Interface Type	Monthly Rate	Nonrecurring Charge
(Mapped to SONET at one end) (Cont'd)		
1 Gbps Ethernet (450 Mbps) to OC12		
N-MSA	3,520.00	1.00
Price Band 4	3,520.00	1.00
Price Band 5	3,520.00	1.00
Price Band 6	3,520.00	1.00
1 Gbps Ethernet (600 Mbps) to OC12		
N-MSA	4,200.00	1.00
Price Band 4	4,200.00	1.00
Price Band 5	4,200.00	1.00
Price Band 6	4,200.00	1.00
1 Gbps Ethernet (600 Mbps) to OC12c		
N-MSA	4,200.00	1.00
Price Band 4	4,200.00	1.00
Price Band 5	4,200.00	1.00
Price Band 6	4,200.00	1.00
1 Gbps Ethernet (Full Rate) to OC48		
N-MSA	5,880.00	1.00
Price Band 4	5,880.00	1.00
Price Band 5	5,880.00	1.00
Price Band 6	5,880.00	1.00
1 Gbps Fibre Channel (Full Rate) to OC48		
N-MSA	6,470.00	1.00
Price Band 4	6,470.00	1.00
Price Band 5	6,470.00	1.00
Price Band 6	6,470.00	1.00
1 Gbps FiCON (Full Rate) to OC48		
N-MSA	6,470.00	1.00
Price Band 4	6,470.00	1.00
Price Band 5	6,470.00	1.00
Price Band 6	6,470.00	1.00

Service availability limited. Refer to # footnote on Page 7-159.

© 2022 Frontier Communications Parent, Inc. All rights reserved

7. Special Access Service (Cont'd)

7.5 Rates and Charges (Cont'd)

7.5.25 Ethernet Private Line# (Cont'd)

(A) On-Net Channel Extensions (Cont'd)
- Per Channel Extension

(2) Unprotected (Cont'd)

(b) 3-year Commitment Period/Term Plan

Interface Type	Monthly Rate	Nonrecurring Charge
10 Mbps Ethernet (Full Rate)		
N-MSA	$ 740.00	$1.00
Price Band 4	740.00	1.00
Price Band 5	740.00	1.00
Price Band 6	740.00	1.00
100 Mbps Ethernet (50 Mbps)		
N-MSA	1,180.00	1.00
Price Band 4	1,180.00	1.00
Price Band 5	1,180.00	1.00
Price Band 6	1,180.00	1.00
100 Mbps Ethernet (Full Rate)		
N-MSA	1,620.00	1.00
Price Band 4	1,620.00	1.00
Price Band 5	1,620.00	1.00
Price Band 6	1,620.00	1.00
1 Gbps Ethernet (50 Mbps)		
N-MSA	1,180.00	1.00
Price Band 4	1,180.00	1.00
Price Band 5	1,180.00	1.00
Price Band 6	1,180.00	1.00
1 Gbps Ethernet (150 Mbps)		
N-MSA	1,840.00	1.00
Price Band 4	1,840.00	1.00
Price Band 5	1,840.00	1.00
Price Band 6	1,840.00	1.00

Service availability limited. Refer to # footnote on Page 7-159.

© 2022 Frontier Communications Parent, Inc. All rights reserved

7. Special Access Service (Cont'd)

7.5 Rates and Charges (Cont'd)

7.5.25 Ethernet Private Line# (Cont'd)

(A) On-Net Channel Extensions (Cont'd)
- Per Channel Extension

(2) Unprotected (Cont'd)

(b) 3-year Commitment Period/Term Plan (Cont'd)

Interface Type	Monthly Rate	Nonrecurring Charge
1 Gbps Ethernet (300 Mbps)		
N-MSA	$2,490.00	$1.00
Price Band 4	2,490.00	1.00
Price Band 5	2,490.00	1.00
Price Band 6	2,490.00	1.00
1 Gbps Ethernet (450 Mbps)		
N-MSA	3,150.00	1.00
Price Band 4	3,150.00	1.00
Price Band 5	3,150.00	1.00
Price Band 6	3,150.00	1.00
1 Gbps Ethernet (600 Mbps)		
N-MSA	3,800.00	1.00
Price Band 4	3,800.00	1.00
Price Band 5	3,800.00	1.00
Price Band 6	3,800.00	1.00
1 Gbps Ethernet (Full Rate)		
N-MSA	5,320.00	1.00
Price Band 4	5,320.00	1.00
Price Band 5	5,320.00	1.00
Price Band 6	5,320.00	1.00
1 Gbps Fibre Channel (Full Rate)		
N-MSA	5,860.00	1.00
Price Band 4	5,860.00	1.00
Price Band 5	5,860.00	1.00
Price Band 6	5,860.00	1.00
1 Gbps FiCON (Full Rate)		
N-MSA	5,860.00	1.00
Price Band 4	5,860.00	1.00
Price Band 5	5,860.00	1.00
Price Band 6	5,860.00	1.00

Service availability limited. Refer to # footnote on Page 7-159.

© 2022 Frontier Communications Parent, Inc. All rights reserved

7. Special Access Service (Cont'd)

7.5 Rates and Charges (Cont'd)

7.5.25 Ethernet Private Line# (Cont'd)

(A) On-Net Channel Extensions (Cont'd)
- Per Channel Extension

(2) Unprotected (Cont'd)

(b) 3-year Commitment Period/Term Plan (Cont'd)

Interface Type	Monthly Rate	Nonrecurring Charge
(Mapped to SONET at one end)		
10 Mbps Ethernet (Full Rate) to STS1		
N-MSA	$ 740.00	$1.00
Price Band 4	740.00	1.00
Price Band 5	740.00	1.00
Price Band 6	740.00	1.00
100 Mbps Ethernet (50 Mbps) to STS1		
N-MSA	1,180.00	1.00
Price Band 4	1,180.00	1.00
Price Band 5	1,180.00	1.00
Price Band 6	1,180.00	1.00
100 Mbps Ethernet (Full Rate) to OC3c		
N-MSA	1,620.00	1.00
Price Band 4	1,620.00	1.00
Price Band 5	1,620.00	1.00
Price Band 6	1,620.00	1.00
1 Gbps Ethernet (50 Mbps) to OC3		
N-MSA	1,180.00	1.00
Price Band 4	1,180.00	1.00
Price Band 5	1,180.00	1.00
Price Band 6	1,180.00	1.00
1 Gbps Ethernet (150 Mbps) to OC3		
N-MSA	1,840.00	1.00
Price Band 4	1,840.00	1.00
Price Band 5	1,840.00	1.00
Price Band 6	1,840.00	1.00
1 Gbps Ethernet (300 Mbps) to OC12		
N-MSA	2,490.00	1.00
Price Band 4	2,490.00	1.00
Price Band 5	2,490.00	1.00
Price Band 6	2,490.00	1.00

Service availability limited. Refer to # footnote on Page 7-159.

© 2022 Frontier Communications Parent, Inc. All rights reserved

7. Special Access Service (Cont'd)

7.5 Rates and Charges (Cont'd)

7.5.25 Ethernet Private Line# (Cont'd)

(A) On-Net Channel Extensions (Cont'd)
- Per Channel Extension

(2) Unprotected (Cont'd)

(b) 3-year Commitment Period/Term Plan (Cont'd)

Interface Type	Monthly Rate	Nonrecurring Charge
(Mapped to SONET at one end) (Cont'd)		
1 Gbps Ethernet (450 Mbps) to OC12		
N-MSA	$3,150.00	$1.00
Price Band 4	3,150.00	1.00
Price Band 5	3,150.00	1.00
Price Band 6	3,150.00	1.00
1 Gbps Ethernet (600 Mbps) to OC12		
N-MSA	3,800.00	1.00
Price Band 4	3,800.00	1.00
Price Band 5	3,800.00	1.00
Price Band 6	3,800.00	1.00
1 Gbps Ethernet (600 Mbps) to OC12c		
N-MSA	3,800.00	1.00
Price Band 4	3,800.00	1.00
Price Band 5	3,800.00	1.00
Price Band 6	3,800.00	1.00
1 Gbps Ethernet (Full Rate) to OC48		
N-MSA	5,320.00	1.00
Price Band 4	5,320.00	1.00
Price Band 5	5,320.00	1.00
Price Band 6	5,320.00	1.00
1 Gbps Fibre Channel (Full Rate) to OC48		
N-MSA	5,860.00	1.00
Price Band 4	5,860.00	1.00
Price Band 5	5,860.00	1.00
Price Band 6	5,860.00	1.00
1 Gbps FiCON (Full Rate) to OC48		
N-MSA	5,860.00	1.00
Price Band 4	5,860.00	1.00
Price Band 5	5,860.00	1.00
Price Band 6	5,860.00	1.00

Service availability limited. Refer to # footnote on Page 7-159.

© 2022 Frontier Communications Parent, Inc. All rights reserved

7. Special Access Service (Cont'd)

7.5 Rates and Charges (Cont'd)

7.5.25 Ethernet Private Line# (Cont'd)

(A) On-Net Channel Extensions (Cont'd)
- Per Channel Extension

(2) Unprotected (Cont'd)

(c) 5-year Commitment Period/Term Plan

Interface Type	Monthly Rate	Nonrecurring Charge
10 Mbps Ethernet (Full Rate)		
N-MSA	$ 590.00	$1.00
Price Band 4	590.00	1.00
Price Band 5	590.00	1.00
Price Band 6	590.00	1.00
100 Mbps Ethernet (50 Mbps)		
N-MSA	960.00	1.00
Price Band 4	960.00	1.00
Price Band 5	960.00	1.00
Price Band 6	960.00	1.00
100 Mbps Ethernet (Full Rate)		
N-MSA	1,320.00	1.00
Price Band 4	1,320.00	1.00
Price Band 5	1,320.00	1.00
Price Band 6	1,320.00	1.00
1 Gbps Ethernet (50 Mbps)		
N-MSA	960.00	1.00
Price Band 4	960.00	1.00
Price Band 5	960.00	1.00
Price Band 6	960.00	1.00
1 Gbps Ethernet (150 Mbps)		
N-MSA	1,600.00	1.00
Price Band 4	1,600.00	1.00
Price Band 5	1,600.00	1.00
Price Band 6	1,600.00	1.00

Service availability limited. Refer to # footnote on Page 7-159.

© 2022 Frontier Communications Parent, Inc. All rights reserved

7. Special Access Service (Cont'd)

7.5 Rates and Charges (Cont'd)

7.5.25 Ethernet Private Line# (Cont'd)

(A) On-Net Channel Extensions (Cont'd)
- Per Channel Extension

(2) Unprotected (Cont'd)

(c) 5-year Commitment Period/Term Plan (Cont'd)

Interface Type	Monthly Rate	Nonrecurring Charge
1 Gbps Ethernet (300 Mbps)		
N-MSA	$2,230.00	$1.00
Price Band 4	2,230.00	1.00
Price Band 5	2,230.00	1.00
Price Band 6	2,230.00	1.00
1 Gbps Ethernet (450 Mbps)		
N-MSA	2,860.00	1.00
Price Band 4	2,860.00	1.00
Price Band 5	2,860.00	1.00
Price Band 6	2,860.00	1.00
1 Gbps Ethernet (600 Mbps)		
N-MSA	3,490.00	1.00
Price Band 4	3,490.00	1.00
Price Band 5	3,490.00	1.00
Price Band 6	3,490.00	1.00
1 Gbps Ethernet (Full Rate)		
N-MSA	4,890.00	1.00
Price Band 4	4,890.00	1.00
Price Band 5	4,890.00	1.00
Price Band 6	4,890.00	1.00
1 Gbps Fibre Channel (Full Rate)		
N-MSA	5,380.00	1.00
Price Band 4	5,380.00	1.00
Price Band 5	5,380.00	1.00
Price Band 6	5,380.00	1.00
1 Gbps FiCON (Full Rate)		
N-MSA	5,380.00	1.00
Price Band 4	5,380.00	1.00
Price Band 5	5,380.00	1.00
Price Band 6	5,380.00	1.00

Service availability limited. Refer to # footnote on Page 7-159.

© 2022 Frontier Communications Parent, Inc. All rights reserved

7. Special Access Service (Cont'd)

7.5 Rates and Charges (Cont'd)

7.5.25 Ethernet Private Line# (Cont'd)

(A) On-Net Channel Extensions (Cont'd)
- Per Channel Extension

(2) Unprotected (Cont'd)

(c) 5-year Commitment Period/Term Plan (Cont'd)

Interface Type	Monthly Rate	Nonrecurring Charge
(Mapped to SONET at one end)		
10 Mbps Ethernet (Full Rate) to STS1		
N-MSA	$ 590.00	1.00
Price Band 4	590.00	1.00
Price Band 5	590.00	1.00
Price Band 6	590.00	1.00
100 Mbps Ethernet (50 Mbps) to STS1		
N-MSA	960.00	1.00
Price Band 4	960.00	1.00
Price Band 5	960.00	1.00
Price Band 6	960.00	1.00
100 Mbps Ethernet (Full Rate) to OC3c		
N-MSA	1,320.00	1.00
Price Band 4	1,320.00	1.00
Price Band 5	1,320.00	1.00
Price Band 6	1,320.00	1.00
1 Gbps Ethernet (50 Mbps) to OC3		
N-MSA	960.00	1.00
Price Band 4	960.00	1.00
Price Band 5	960.00	1.00
Price Band 6	960.00	1.00
1 Gbps Ethernet (150 Mbps) to OC3		
N-MSA	1,600.00	1.00
Price Band 4	1,600.00	1.00
Price Band 5	1,600.00	1.00
Price Band 6	1,600.00	1.00
1 Gbps Ethernet (300 Mbps) to OC12		
N-MSA	2,230.00	1.00
Price Band 4	2,230.00	1.00
Price Band 5	2,230.00	1.00
Price Band 6	2,230.00	1.00

Service availability limited. Refer to # footnote on Page 7-159.

© 2022 Frontier Communications Parent, Inc. All rights reserved

7. Special Access Service (Cont'd)

7.5 Rates and Charges (Cont'd)

7.5.25 Ethernet Private Line# (Cont'd)

(A) On-Net Channel Extensions (Cont'd)
- Per Channel Extension

(2) Unprotected (Cont'd)

(c) 5-year Commitment Period/Term Plan (Cont'd)

Interface Type	Monthly Rate	Nonrecurring Charge
(Mapped to SONET at one end) (Cont'd)		
1 Gbps Ethernet (450 Mbps) to OC12		
N-MSA	$2,860.00	$1.00
Price Band 4	2,860.00	1.00
Price Band 5	2,860.00	1.00
Price Band 6	2,860.00	1.00
1 Gbps Ethernet (600 Mbps) to OC12		
N-MSA	3,490.00	1.00
Price Band 4	3,490.00	1.00
Price Band 5	3,490.00	1.00
Price Band 6	3,490.00	1.00
1 Gbps Ethernet (600 Mbps) to OC12c		
N-MSA	3,490.00	1.00
Price Band 4	3,490.00	1.00
Price Band 5	3,490.00	1.00
Price Band 6	3,490.00	1.00
1 Gbps Ethernet (Full Rate) to OC48		
N-MSA	4,890.00	1.00
Price Band 4	4,890.00	1.00
Price Band 5	4,890.00	1.00
Price Band 6	4,890.00	1.00
1 Gbps Fibre Channel (Full Rate) to OC48		
N-MSA	5,380.00	1.00
Price Band 4	5,380.00	1.00
Price Band 5	5,380.00	1.00
Price Band 6	5,380.00	1.00
1 Gbps FiCON (Full Rate) to OC48		
N-MSA	5,380.00	1.00
Price Band 4	5,380.00	1.00
Price Band 5	5,380.00	1.00
Price Band 6	5,380.00	1.00

Service availability limited. Refer to # footnote on Page 7-159.

© 2022 Frontier Communications Parent, Inc. All rights reserved

7. Special Access Service (Cont'd)

7.5 Rates and Charges (Cont'd)

7.5.25 Ethernet Private Line# (Cont'd)

(A) On-Net Channel Extensions (Cont'd)
- Per Channel Extension

(2) Unprotected (Cont'd)

7-year Commitment Period/Term Plan

Interface Type	Monthly Rate	Nonrecurring Charge
10 Mbps Ethernet (Full Rate)		
N-MSA	$ 480.00	$1.00
Price Band 4	480.00	1.00
Price Band 5	480.00	1.00
Price Band 6	480.00	1.00
100 Mbps Ethernet (50 Mbps)		
N-MSA	790.00	1.00
Price Band 4	790.00	1.00
Price Band 5	790.00	1.00
Price Band 6	790.00	1.00
100 Mbps Ethernet (Full Rate)		
N-MSA	1,100.00	1.00
Price Band 4	1,100.00	1.00
Price Band 5	1,100.00	1.00
Price Band 6	1,100.00	1.00
1 Gbps Ethernet (50 Mbps)		
N-MSA	790.00	1.00
Price Band 4	790.00	1.00
Price Band 5	790.00	1.00
Price Band 6	790.00	1.00
1 Gbps Ethernet (150 Mbps)		
N-MSA	1,450.00	1.00
Price Band 4	1,450.00	1.00
Price Band 5	1,450.00	1.00
Price Band 6	1,450.00	1.00

Service availability limited. Refer to # footnote on Page 7-159.

© 2022 Frontier Communications Parent, Inc. All rights reserved

7. Special Access Service (Cont'd)

7.5 Rates and Charges (Cont'd)

7.5.25 Ethernet Private Line# (Cont'd)

(A) On-Net Channel Extensions (Cont'd)
- Per Channel Extension

(2) Unprotected (Cont'd)

7-year Commitment Period/Term Plan (Cont'd)

Interface Type	Monthly Rate	Nonrecurring Charge
1 Gbps Ethernet (300 Mbps)		
N-MSA	$2,100.00	$1.00
Price Band 4	2,100.00	1.00
Price Band 5	2,100.00	1.00
Price Band 6	2,100.00	1.00
1 Gbps Ethernet (450 Mbps)		
N-MSA	2,750.00	1.00
Price Band 4	2,750.00	1.00
Price Band 5	2,750.00	1.00
Price Band 6	2,750.00	1.00
1 Gbps Ethernet (600 Mbps)		
N-MSA	3,400.00	1.00
Price Band 4	3,400.00	1.00
Price Band 5	3,400.00	1.00
Price Band 6	3,400.00	1.00
1 Gbps Ethernet (Full Rate)		
N-MSA	4,760.00	1.00
Price Band 4	4,760.00	1.00
Price Band 5	4,760.00	1.00
Price Band 6	4,760.00	1.00
1 Gbps Fibre Channel (Full Rate)		
N-MSA	5,240.00	1.00
Price Band 4	5,240.00	1.00
Price Band 5	5,240.00	1.00
Price Band 6	5,240.00	1.00
1 Gbps FiCON (Full Rate)		
N-MSA	5,280.00	1.00
Price Band 4	5,280.00	1.00
Price Band 5	5,280.00	1.00
Price Band 6	5,280.00	1.00

Service availability limited. Refer to # footnote on Page 7-159.

© 2022 Frontier Communications Parent, Inc. All rights reserved

7. Special Access Service (Cont'd)

7.5 Rates and Charges (Cont'd)

7.5.25 Ethernet Private Line# (Cont'd)

(A) On-Net Channel Extensions (Cont'd)
- Per Channel Extension

(2) Unprotected (Cont'd)

7-year Commitment Period/Term Plan (Cont'd)

Interface Type	Monthly Rate	Nonrecurring Charge
(Mapped to SONET at one end)		
10 Mbps Ethernet (Full Rate) to STS1		
N-MSA	$ 480.00	$1.00
Price Band 4	480.00	1.00
Price Band 5	480.00	1.00
Price Band 6	480.00	1.00
100 Mbps Ethernet (50 Mbps) to STS1		
N-MSA	790.00	1.00
Price Band 4	790.00	1.00
Price Band 5	790.00	1.00
Price Band 6	790.00	1.00
100 Mbps Ethernet (Full Rate) to OC3c		
N-MSA	1,100.00	1.00
Price Band 4	1,100.00	1.00
Price Band 5	1,100.00	1.00
Price Band 6	1,100.00	1.00
1 Gbps Ethernet (50 Mbps) to OC3		
N-MSA	790.00	1.00
Price Band 4	790.00	1.00
Price Band 5	790.00	1.00
Price Band 6	790.00	1.00
1 Gbps Ethernet (150 Mbps) to OC3		
N-MSA	1,450.00	1.00
Price Band 4	1,450.00	1.00
Price Band 5	1,450.00	1.00
Price Band 6	1,450.00	1.00
1 Gbps Ethernet (300 Mbps) to OC12		
N-MSA	2,100.00	1.00
Price Band 4	2,100.00	1.00
Price Band 5	2,100.00	1.00
Price Band 6	2,100.00	1.00

Service availability limited. Refer to # footnote on Page 7-159.

© 2022 Frontier Communications Parent, Inc. All rights reserved

7. Special Access Service (Cont'd)

7.5 Rates and Charges (Cont'd)

7.5.25 Ethernet Private Line# (Cont'd)

(A) On-Net Channel Extensions (Cont'd)
- Per Channel Extension

(2) Unprotected (Cont'd)

7-year Commitment Period/Term Plan (Cont'd)

Interface Type	Monthly Rate	Nonrecurring Charge
(Mapped to SONET at one end) (Cont'd)		
1 Gbps Ethernet (450 Mbps) to OC12		
N-MSA	$2,750.00	$1.00
Price Band 4	2,750.00	1.00
Price Band 5	2,750.00	1.00
Price Band 6	2,750.00	1.00
1 Gbps Ethernet (600 Mbps) to OC12		
N-MSA	3,400.00	1.00
Price Band 4	3,400.00	1.00
Price Band 5	3,400.00	1.00
Price Band 6	3,400.00	1.00
1 Gbps Ethernet (600 Mbps) to OC12c		
N-MSA	3,400.00	1.00
Price Band 4	3,400.00	1.00
Price Band 5	3,400.00	1.00
Price Band 6	3,400.00	1.00
1 Gbps Ethernet (Full Rate) to OC48		
N-MSA	4,760.00	1.00
Price Band 4	4,760.00	1.00
Price Band 5	4,760.00	1.00
Price Band 6	4,760.00	1.00
1 Gbps Fibre Channel (Full Rate) to OC48		
N-MSA	5,240.00	1.00
Price Band 4	5,240.00	1.00
Price Band 5	5,240.00	1.00
Price Band 6	5,240.00	1.00
1 Gbps FiCON (Full Rate) to OC48		
N-MSA	5,240.00	1.00
Price Band 4	5,240.00	1.00
Price Band 5	5,240.00	1.00
Price Band 6	5,240.00	1.00

Service availability limited. Refer to # footnote on Page 7-159.

© 2022 Frontier Communications Parent, Inc. All rights reserved

7. Special Access Service (Cont'd)

7.5 Rates and Charges (Cont'd)

7.5.25 Ethernet Private Line# (Cont'd)

(B) On-Net Channel Mileage
- Per Mile

(1) Protected

(a) 1-year Commitment Period/Term Plan

Interface Type	Monthly Rate Fixed	Monthly Rate Per Mile
10 Mbps Ethernet (Full Rate)		
N-MSA	$ 360.00	$ 96.00
Price Band 4	360.00	96.00
Price Band 5	360.00	96.00
Price Band 6	360.00	96.00
100 Mbps Ethernet (50 Mbps)		
N-MSA	560.00	120.00
Price Band 4	560.00	120.00
Price Band 5	560.00	120.00
Price Band 6	560.00	120.00
100 Mbps Ethernet (Full Rate)		
N-MSA	750.00	143.00
Price Band 4	750.00	143.00
Price Band 5	750.00	143.00
Price Band 6	750.00	143.00
1 Gbps Ethernet (50 Mbps)		
N-MSA	560.00	120.00
Price Band 4	560.00	120.00
Price Band 5	560.00	120.00
Price Band 6	560.00	120.00
1 Gbps Ethernet (150 Mbps)		
N-MSA	820.00	155.00
Price Band 4	820.00	155.00
Price Band 5	820.00	155.00
Price Band 6	820.00	155.00

Service availability limited. Refer to # footnote on Page 7-159.

© 2022 Frontier Communications Parent, Inc. All rights reserved

7. Special Access Service (Cont'd)

7.5 Rates and Charges (Cont'd)

7.5.25 Ethernet Private Line# (Cont'd)

(B) On-Net Channel Mileage (Cont'd)
- Per Mile

(1) Protected (Cont'd)

(a) 1-year Commitment Period/Term Plan (Cont'd)

Interface Type	Monthly Rate Fixed	Monthly Rate Per Mile
1 Gbps Ethernet (300 Mbps)		
N-MSA	$1,080.00	$190.00
Price Band 4	1,080.00	190.00
Price Band 5	1,080.00	190.00
Price Band 6	1,080.00	190.00
1 Gbps Ethernet (450 Mbps)		
N-MSA	1,340.00	225.00
Price Band 4	1,340.00	225.00
Price Band 5	1,340.00	225.00
Price Band 6	1,340.00	225.00
1 Gbps Ethernet (600 Mbps)		
N-MSA	1,600.00	260.00
Price Band 4	1,600.00	260.00
Price Band 5	1,600.00	260.00
Price Band 6	1,600.00	260.00
1 Gbps Ethernet (Full Rate)		
N-MSA	2,240.00	364.00
Price Band 4	2,240.00	364.00
Price Band 5	2,240.00	364.00
Price Band 6	2,240.00	364.00
1 Gbps Fibre Channel (Full Rate)		
N-MSA	2,470.00	401.00
Price Band 4	2,470.00	401.00
Price Band 5	2,470.00	401.00
Price Band 6	2,470.00	401.00
1 Gbps FiCON (Full Rate)		
N-MSA	2,470.00	401.00
Price Band 4	2,470.00	401.00
Price Band 5	2,470.00	401.00
Price Band 6	2,470.00	401.00

Service availability limited. Refer to # footnote on Page 7-159.

© 2022 Frontier Communications Parent, Inc. All rights reserved

7. Special Access Service (Cont'd)

7.5 Rates and Charges (Cont'd)

7.5.25 Ethernet Private Line# (Cont'd)

(B) On-Net Channel Mileage (Cont'd)
- Per Mile

(1) Protected (Cont'd)

(a) 1-year Commitment Period/Term Plan (Cont'd)

Interface Type	Monthly Rate Fixed	Monthly Rate Per Mile
(Mapped to SONET at one end)		
10 Mbps Ethernet (Full Rate) to STS1		
N-MSA	$360.00	$ 96.00
Price Band 4	360.00	96.00
Price Band 5	360.00	96.00
Price Band 6	360.00	96.00
100 Mbps Ethernet (50 Mbps) to STS1		
N-MSA	560.00	120.00
Price Band 4	560.00	120.00
Price Band 5	560.00	120.00
Price Band 6	560.00	120.00
100 Mbps Ethernet (Full Rate) to OC3c		
N-MSA	750.00	143.00
Price Band 4	750.00	143.00
Price Band 5	750.00	143.00
Price Band 6	750.00	143.00
1 Gbps Ethernet (50 Mbps) to OC3		
N-MSA	560.00	120.00
Price Band 4	560.00	120.00
Price Band 5	560.00	120.00
Price Band 6	560.00	120.00
1 Gbps Ethernet (150 Mbps) to OC3		
N-MSA	820.00	155.00
Price Band 4	820.00	155.00
Price Band 5	820.00	155.00
Price Band 6	820.00	155.00
1 Gbps Ethernet (300 Mbps) to OC12		
N-MSA	1,080.00	190.00
Price Band 4	1,080.00	190.00
Price Band 5	1,080.00	190.00
Price Band 6	1,080.00	190.00

Service availability limited. Refer to # footnote on Page 7-159.

© 2022 Frontier Communications Parent, Inc. All rights reserved

7. Special Access Service (Cont'd)

7.5 Rates and Charges (Cont'd)

7.5.25 Ethernet Private Line# (Cont'd)

(B) On-Net Channel Mileage (Cont'd)
- Per Mile

(1) Protected (Cont'd)

(a) 1-year Commitment Period/Term Plan (Cont'd)

Interface Type	Monthly Rate Fixed	Monthly Rate Per Mile
(Mapped to SONET at one end) (Cont'd)		
1 Gbps Ethernet (450 Mbps) to OC12		
N-MSA	$1,340.00	$225.00
Price Band 4	1,340.00	225.00
Price Band 5	1,340.00	225.00
Price Band 6	1,340.00	225.00
1 Gbps Ethernet (600 Mbps) to OC12		
N-MSA	1,600.00	260.00
Price Band 4	1,600.00	260.00
Price Band 5	1,600.00	260.00
Price Band 6	1,600.00	260.00
1 Gbps Ethernet (600 Mbps) to OC12c		
N-MSA	1,600.00	260.00
Price Band 4	1,600.00	260.00
Price Band 5	1,600.00	260.00
Price Band 6	1,600.00	260.00
1 Gbps Ethernet (Full Rate) to OC48		
N-MSA	2,240.00	364.00
Price Band 4	2,240.00	364.00
Price Band 5	2,240.00	364.00
Price Band 6	2,240.00	364.00
1 Gbps Fibre Channel (Full Rate) to OC48		
N-MSA	2,470.00	401.00
Price Band 4	2,470.00	401.00
Price Band 5	2,470.00	401.00
Price Band 6	2,470.00	401.00
1 Gbps FiCON (Full Rate) to OC48		
N-MSA	2,470.00	401.00
Price Band 4	2,470.00	401.00
Price Band 5	2,470.00	401.00
Price Band 6	2,470.00	401.00

Service availability limited. Refer to # footnote on Page 7-159.

© 2022 Frontier Communications Parent, Inc. All rights reserved

7. Special Access Service (Cont'd)

7.5 Rates and Charges (Cont'd)

7.5.25 Ethernet Private Line# (Cont'd)

(B) On-Net Channel Mileage (Cont'd)
- Per Mile

(1) Protected (Cont'd)

(b) 3-year Commitment Period/Term Plan

Interface Type	Monthly Rate Fixed	Monthly Rate Per Mile
10 Mbps Ethernet (Full Rate)		
N-MSA	$ 270.00	$ 74.00
Price Band 4	270.00	74.00
Price Band 5	270.00	74.00
Price Band 6	270.00	74.00
100 Mbps Ethernet (50 Mbps)		
N-MSA	440.00	91.00
Price Band 4	440.00	91.00
Price Band 5	440.00	91.00
Price Band 6	440.00	91.00
100 Mbps Ethernet (Full Rate)		
N-MSA	610.00	108.00
Price Band 4	610.00	108.00
Price Band 5	610.00	108.00
Price Band 6	610.00	108.00
1 Gbps Ethernet (50 Mbps)		
N-MSA	440.00	91.00
Price Band 4	440.00	91.00
Price Band 5	440.00	91.00
Price Band 6	440.00	91.00
1 Gbps Ethernet (150 Mbps)		
N-MSA	680.00	126.00
Price Band 4	680.00	126.00
Price Band 5	680.00	126.00
Price Band 6	680.00	126.00

Service availability limited. Refer to # footnote on Page 7-159.

© 2022 Frontier Communications Parent, Inc. All rights reserved

7. Special Access Service (Cont'd)

7.5 Rates and Charges (Cont'd)

7.5.25 Ethernet Private Line# (Cont'd)

(B) On-Net Channel Mileage (Cont'd)
- Per Mile

(1) Protected (Cont'd)

(b) 3-year Commitment Period/Term Plan (Cont'd)

Interface Type	Monthly Rate Fixed	Monthly Rate Per Mile
1 Gbps Ethernet (300 Mbps)		
N-MSA	$ 920.00	$161.00
Price Band 4	920.00	161.00
Price Band 5	920.00	161.00
Price Band 6	920.00	161.00
1 Gbps Ethernet (450 Mbps)		
N-MSA	1,160.00	196.00
Price Band 4	1,160.00	196.00
Price Band 5	1,160.00	196.00
Price Band 6	1,160.00	196.00
1 Gbps Ethernet (600 Mbps)		
N-MSA	1,400.00	230.00
Price Band 4	1,400.00	230.00
Price Band 5	1,400.00	230.00
Price Band 6	1,400.00	230.00
1 Gbps Ethernet (Full Rate)		
N-MSA	1,960.00	322.00
Price Band 4	1,960.00	322.00
Price Band 5	1,960.00	322.00
Price Band 6	1,960.00	322.00
1 Gbps Fibre Channel (Full Rate)		
N-MSA	2,160.00	355.00
Price Band 4	2,160.00	355.00
Price Band 5	2,160.00	355.00
Price Band 6	2,160.00	355.00
1 Gbps FiCON (Full Rate)		
N-MSA	2,160.00	355.00
Price Band 4	2,160.00	355.00
Price Band 5	2,160.00	355.00
Price Band 6	2,160.00	355.00

Service availability limited. Refer to # footnote on Page 7-159.

© 2022 Frontier Communications Parent, Inc. All rights reserved

7. Special Access Service (Cont'd)

7.5 Rates and Charges (Cont'd)

7.5.25 Ethernet Private Line# (Cont'd)

(B) On-Net Channel Mileage (Cont'd)
- Per Mile

(1) Protected (Cont'd)

(b) 3-year Commitment Period/Term Plan (Cont'd)

Interface Type	Monthly Rate Fixed	Monthly Rate Per Mile
(Mapped to SONET at one end)		
10 Mbps Ethernet (Full Rate) to STS1		
N-MSA	$ 270.00	$ 74.00
Price Band 4	270.00	74.00
Price Band 5	270.00	74.00
Price Band 6	270.00	74.00
100 Mbps Ethernet (50 Mbps) to STS1		
N-MSA	440.00	91.00
Price Band 4	440.00	91.00
Price Band 5	440.00	91.00
Price Band 6	440.00	91.00
100 Mbps Ethernet (Full Rate) to OC3c		
N-MSA	610.00	108.00
Price Band 4	610.00	108.00
Price Band 5	610.00	108.00
Price Band 6	610.00	108.00
1 Gbps Ethernet (50 Mbps) to OC3		
N-MSA	440.00	91.00
Price Band 4	440.00	91.00
Price Band 5	440.00	91.00
Price Band 6	440.00	91.00
1 Gbps Ethernet (150 Mbps) to OC3		
N-MSA	680.00	126.00
Price Band 4	680.00	126.00
Price Band 5	680.00	126.00
Price Band 6	680.00	126.00
1 Gbps Ethernet (300 Mbps) to OC12		
N-MSA	920.00	161.00
Price Band 4	920.00	161.00
Price Band 5	920.00	161.00
Price Band 6	920.00	161.00

Service availability limited. Refer to # footnote on Page 7-159.

© 2022 Frontier Communications Parent, Inc. All rights reserved

7. Special Access Service (Cont'd)

7.5 Rates and Charges (Cont'd)

7.5.25 Ethernet Private Line# (Cont'd)

(B) On-Net Channel Mileage (Cont'd)
- Per Mile

(1) Protected (Cont'd)

(b) 3-year Commitment Period/Term Plan (Cont'd)

Interface Type	Monthly Rate Fixed	Monthly Rate Per Mile
(Mapped to SONET at one end) (Cont'd)		
1 Gbps Ethernet (450 Mbps) to OC12		
N-MSA	$1,160.00	$196.00
Price Band 4	1,160.00	196.00
Price Band 5	1,160.00	196.00
Price Band 6	1,160.00	196.00
1 Gbps Ethernet (600 Mbps) to OC12		
N-MSA	1,400.00	230.00
Price Band 4	1,400.00	230.00
Price Band 5	1,400.00	230.00
Price Band 6	1,400.00	230.00
1 Gbps Ethernet (600 Mbps) to OC12c		
N-MSA	1,400.00	230.00
Price Band 4	1,400.00	230.00
Price Band 5	1,400.00	230.00
Price Band 6	1,400.00	230.00
1 Gbps Ethernet (Full Rate) to OC48		
N-MSA	1,960.00	322.00
Price Band 4	1,960.00	322.00
Price Band 5	1,960.00	322.00
Price Band 6	1,960.00	322.00
1 Gbps Fibre Channel (Full Rate) to OC48		
N-MSA	2,160.00	355.00
Price Band 4	2,160.00	355.00
Price Band 5	2,160.00	355.00
Price Band 6	2,160.00	355.00
1 Gbps FiCON (Full Rate) to OC48		
N-MSA	2,160.00	355.00
Price Band 4	2,160.00	355.00
Price Band 5	2,160.00	355.00
Price Band 6	2,160.00	355.00

Service availability limited. Refer to # footnote on Page 7-159.

© 2022 Frontier Communications Parent, Inc. All rights reserved

7. Special Access Service (Cont'd)

7.5 Rates and Charges (Cont'd)

7.5.25 Ethernet Private Line# (Cont'd)

(B) On-Net Channel Mileage (Cont'd)
- Per Mile

(1) Protected (Cont'd)

(c) 5-year Commitment Period/Term Plan

Interface Type	Monthly Rate Fixed	Monthly Rate Per Mile
10 Mbps Ethernet (Full Rate)		
N-MSA	$180.00	$63.00
Price Band 4	180.00	63.00
Price Band 5	180.00	63.00
Price Band 6	180.00	63.00
100 Mbps Ethernet (50 Mbps)		
N-MSA	330.00	77.00
Price Band 4	330.00	77.00
Price Band 5	330.00	77.00
Price Band 6	330.00	77.00
100 Mbps Ethernet (Full Rate)		
N-MSA	480.00	90.00
Price Band 4	480.00	90.00
Price Band 5	480.00	90.00
Price Band 6	480.00	90.00
1 Gbps Ethernet (50 Mbps)		
N-MSA	330.00	77.00
Price Band 4	330.00	77.00
Price Band 5	330.00	77.00
Price Band 6	330.00	77.00
1 Gbps Ethernet (150 Mbps)		
N-MSA	580.00	113.00
Price Band 4	580.00	113.00
Price Band 5	580.00	113.00
Price Band 6	580.00	113.00

Service availability limited. Refer to # footnote on Page 7-159.

© 2022 Frontier Communications Parent, Inc. All rights reserved

7. Special Access Service (Cont'd)

7.5 Rates and Charges (Cont'd)

7.5.25 Ethernet Private Line# (Cont'd)

(B) On-Net Channel Mileage (Cont'd)
- Per Mile

(1) Protected (Cont'd)

(c) 5-year Commitment Period/Term Plan (Cont'd)

Interface Type	Monthly Rate Fixed	Monthly Rate Per Mile
1 Gbps Ethernet (300 Mbps)		
N-MSA	$ 820.00	$148.00
Price Band 4	820.00	148.00
Price Band 5	820.00	148.00
Price Band 6	820.00	148.00
1 Gbps Ethernet (450 Mbps)		
N-MSA	1,060.00	184.00
Price Band 4	1,060.00	184.00
Price Band 5	1,060.00	184.00
Price Band 6	1,060.00	184.00
1 Gbps Ethernet (600 Mbps)		
N-MSA	1,300.00	219.00
Price Band 4	1,300.00	219.00
Price Band 5	1,300.00	219.00
Price Band 6	1,300.00	219.00
1 Gbps Ethernet (Full Rate)		
N-MSA	1,820.00	307.00
Price Band 4	1,820.00	307.00
Price Band 5	1,820.00	307.00
Price Band 6	1,820.00	307.00
1 Gbps Fibre Channel (Full Rate)		
N-MSA	2,010.00	338.00
Price Band 4	2,010.00	338.00
Price Band 5	2,010.00	338.00
Price Band 6	2,010.00	338.00
1 Gbps FiCON (Full Rate)		
N-MSA	2,010.00	338.00
Price Band 4	2,010.00	338.00
Price Band 5	2,010.00	338.00
Price Band 6	2,010.00	338.00

Service availability limited. Refer to # footnote on Page 7-159.

© 2022 Frontier Communications Parent, Inc. All rights reserved

7. Special Access Service (Cont'd)

7.5 Rates and Charges (Cont'd)

7.5.25 Ethernet Private Line# (Cont'd)

(B)On-Net Channel Mileage (Cont'd)
- Per Mile

(1) Protected (Cont'd)

(c) 5-year Commitment Period/Term Plan (Cont'd)

Interface Type	Monthly Rate Fixed	Monthly Rate Per Mile
(Mapped to SONET at one end)		
10 Mbps Ethernet (Full Rate) to STS1		
N-MSA	$180.00	$63.00
Price Band 4	180.00	63.00
Price Band 5	180.00	63.00
Price Band 6	180.00	63.00
100 Mbps Ethernet (50 Mbps) to STS1		
N-MSA	330.00	77.00
Price Band 4	330.00	77.00
Price Band 5	330.00	77.00
Price Band 6	330.00	77.00
100 Mbps Ethernet (Full Rate) to OC3c		
N-MSA	480.00	90.00
Price Band 4	480.00	90.00
Price Band 5	480.00	90.00
Price Band 6	480.00	90.00
1 Gbps Ethernet (50 Mbps) to OC3		
N-MSA	330.00	77.00
Price Band 4	330.00	77.00
Price Band 5	330.00	77.00
Price Band 6	330.00	77.00
1 Gbps Ethernet (150 Mbps) to OC3		
N-MSA	580.00	113.00
Price Band 4	580.00	113.00
Price Band 5	580.00	113.00
Price Band 6	580.00	113.00
1 Gbps Ethernet (300 Mbps) to OC12		
N-MSA	820.00	148.00
Price Band 4	820.00	148.00
Price Band 5	820.00	148.00
Price Band 6	820.00	148.00

Service availability limited. Refer to # footnote on Page 7-159.

© 2022 Frontier Communications Parent, Inc. All rights reserved

7. Special Access Service (Cont'd)

7.5 Rates and Charges (Cont'd)

7.5.25 Ethernet Private Line# (Cont'd)

(B)On-Net Channel Mileage (Cont'd)
- Per Mile

(1) Protected (Cont'd)

(c) 5-year Commitment Period/Term Plan (Cont'd)

Interface Type	Monthly Rate Fixed	Per Mile
(Mapped to SONET at one end) (Cont'd)		
1 Gbps Ethernet (450 Mbps) to OC12		
N-MSA	$1,060.00	$184.00
Price Band 4	1,060.00	184.00
Price Band 5	1,060.00	184.00
Price Band 6	1,060.00	184.00
1 Gbps Ethernet (600 Mbps) to OC12		
N-MSA	1,300.00	219.00
Price Band 4	1,300.00	219.00
Price Band 5	1,300.00	219.00
Price Band 6	1,300.00	219.00
1 Gbps Ethernet (600 Mbps) to OC12c		
N-MSA	1,300.00	219.00
Price Band 4	1,300.00	219.00
Price Band 5	1,300.00	219.00
Price Band 6	1,300.00	219.00
1 Gbps Ethernet (Full Rate) to OC48		
N-MSA	1,820.00	307.00
Price Band 4	1,820.00	307.00
Price Band 5	1,820.00	307.00
Price Band 6	1,820.00	307.00
1 Gbps Fibre Channel (Full Rate) to OC48		
N-MSA	2,010.00	338.00
Price Band 4	2,010.00	338.00
Price Band 5	2,010.00	338.00
Price Band 6	2,010.00	338.00
1 Gbps FiCON (Full Rate) to OC48		
N-MSA	2,010.00	338.00
Price Band 4	2,010.00	338.00
Price Band 5	2,010.00	338.00
Price Band 6	2,010.00	338.00

Service availability limited. Refer to # footnote on Page 7-159.

© 2022 Frontier Communications Parent, Inc. All rights reserved

7. Special Access Service (Cont'd)

7.5 Rates and Charges (Cont'd)

7.5.25 Ethernet Private Line# (Cont'd)

(B) On-Net Channel Mileage (Cont'd)
- Per Mile

(1) Protected (Cont'd)

7-year Commitment Period/Term Plan

Interface Type	Monthly Rate Fixed	Monthly Rate Per Mile
10 Mbps Ethernet (Full Rate)		
N-MSA	$160.00	$48.00
Price Band 4	160.00	48.00
Price Band 5	160.00	48.00
Price Band 6	160.00	48.00
100 Mbps Ethernet (50 Mbps)		
N-MSA	300.00	63.00
Price Band 4	300.00	63.00
Price Band 5	300.00	63.00
Price Band 6	300.00	63.00
100 Mbps Ethernet (Full Rate)		
N-MSA	440.00	77.00
Price Band 4	440.00	77.00
Price Band 5	440.00	77.00
Price Band 6	440.00	77.00
1 Gbps Ethernet (50 Mbps)		
N-MSA	300.00	63.00
Price Band 4	300.00	63.00
Price Band 5	300.00	63.00
Price Band 6	300.00	63.00
1 Gbps Ethernet (150 Mbps)		
N-MSA	550.00	100.00
Price Band 4	550.00	100.00
Price Band 5	550.00	100.00
Price Band 6	550.00	100.00

Service availability limited. Refer to # footnote on Page 7-159.

© 2022 Frontier Communications Parent, Inc. All rights reserved

7. Special Access Service (Cont'd)

7.5 Rates and Charges (Cont'd)

7.5.25 Ethernet Private Line# (Cont'd)

(B) On-Net Channel Mileage (Cont'd)
- Per Mile

(1) Protected (Cont'd)

7-year Commitment Period/Term Plan (Cont'd)

Interface Type	Monthly Rate Fixed	Monthly Rate Per Mile
1 Gbps Ethernet (300 Mbps)		
N-MSA	$ 800.00	$137.00
Price Band 4	800.00	137.00
Price Band 5	800.00	137.00
Price Band 6	800.00	137.00
1 Gbps Ethernet (450 Mbps)		
N-MSA	1,050.00	174.00
Price Band 4	1,050.00	174.00
Price Band 5	1,050.00	174.00
Price Band 6	1,050.00	174.00
1 Gbps Ethernet (600 Mbps)		
N-MSA	1,300.00	210.00
Price Band 4	1,300.00	210.00
Price Band 5	1,300.00	210.00
Price Band 6	1,300.00	210.00
1 Gbps Ethernet (Full Rate)		
N-MSA	1,820.00	294.00
Price Band 4	1,820.00	294.00
Price Band 5	1,820.00	294.00
Price Band 6	1,820.00	294.00
1 Gbps Fibre Channel (Full Rate)		
N-MSA	2,010.00	324.00
Price Band 4	2,010.00	324.00
Price Band 5	2,010.00	324.00
Price Band 6	2,010.00	324.00
1 Gbps FiCON (Full Rate)		
N-MSA	2,010.00	324.00
Price Band 4	2,010.00	324.00
Price Band 5	2,010.00	324.00
Price Band 6	2,010.00	324.00

Service availability limited. Refer to # footnote on Page 7-159.

© 2022 Frontier Communications Parent, Inc. All rights reserved

7. Special Access Service (Cont'd)

7.5 Rates and Charges (Cont'd)

7.5.25 Ethernet Private Line# (Cont'd)

(B) On-Net Channel Mileage (Cont'd)
- Per Mile

(1) Protected (Cont'd)

7-year Commitment Period/Term Plan (Cont'd)

Interface Type	Monthly Rate Fixed	Monthly Rate Per Mile
(Mapped to SONET at one end)		
10 Mbps Ethernet (Full Rate) to STS1		
N-MSA	$160.00	$48.00
Price Band 4	160.00	48.00
Price Band 5	160.00	48.00
Price Band 6	160.00	48.00
100 Mbps Ethernet (50 Mbps) to STS1		
N-MSA	300.00	63.00
Price Band 4	300.00	63.00
Price Band 5	300.00	63.00
Price Band 6	300.00	63.00
100 Mbps Ethernet (Full Rate) to OC3c		
N-MSA	440.00	77.00
Price Band 4	440.00	77.00
Price Band 5	440.00	77.00
Price Band 6	440.00	77.00
1 Gbps Ethernet (50 Mbps) to OC3		
N-MSA	300.00	63.00
Price Band 4	300.00	63.00
Price Band 5	300.00	63.00
Price Band 6	300.00	63.00
1 Gbps Ethernet (150 Mbps) to OC3		
N-MSA	550.00	100.00
Price Band 4	550.00	100.00
Price Band 5	550.00	100.00
Price Band 6	550.00	100.00
1 Gbps Ethernet (300 Mbps) to OC12		
N-MSA	800.00	137.00
Price Band 4	800.00	137.00
Price Band 5	800.00	137.00
Price Band 6	800.00	137.00

Service availability limited. Refer to # footnote on Page 7-159.

© 2022 Frontier Communications Parent, Inc. All rights reserved

7. Special Access Service (Cont'd)

7.5 Rates and Charges (Cont'd)

7.5.25 Ethernet Private Line# (Cont'd)

(B) On-Net Channel Mileage (Cont'd)
- Per Mile

(1) Protected (Cont'd)

7-year Commitment Period/Term Plan (Cont'd)

Interface Type	Monthly Rate Fixed	Monthly Rate Per Mile
(Mapped to SONET at one end) (Cont'd)		
1 Gbps Ethernet (450 Mbps) to OC12		
N-MSA	$1,050.00	$174.00
Price Band 4	1,050.00	174.00
Price Band 5	1,050.00	174.00
Price Band 6	1,050.00	174.00
1 Gbps Ethernet (600 Mbps) to OC12		
N-MSA	1,300.00	210.00
Price Band 4	1,300.00	210.00
Price Band 5	1,300.00	210.00
Price Band 6	1,300.00	210.00
1 Gbps Ethernet (600 Mbps) to OC12c		
N-MSA	1,300.00	210.00
Price Band 4	1,300.00	210.00
Price Band 5	1,300.00	210.00
Price Band 6	1,300.00	210.00
1 Gbps Ethernet (Full Rate) to OC48		
N-MSA	1,820.00	294.00
Price Band 4	1,820.00	294.00
Price Band 5	1,820.00	294.00
Price Band 6	1,820.00	294.00
1 Gbps Fibre Channel (Full Rate) to OC48		
N-MSA	2,010.00	324.00
Price Band 4	2,010.00	324.00
Price Band 5	2,010.00	324.00
Price Band 6	2,010.00	324.00
1 Gbps FiCON (Full Rate) to OC48		
N-MSA	2,010.00	324.00
Price Band 4	2,010.00	324.00
Price Band 5	2,010.00	324.00
Price Band 6	2,010.00	324.00

Service availability limited. Refer to # footnote on Page 7-159.

© 2022 Frontier Communications Parent, Inc. All rights reserved

7. Special Access Service (Cont'd)

7.5 Rates and Charges (Cont'd)

7.5.25 Ethernet Private Line# (Cont'd)

(C) Access Aggregation Ports
- per port

(1) 1-year Commitment Period/Term Plan

Interface Type	Monthly Rate	Nonrecurring Charge
OC3 (Supports Up to 3 Mapped STS1s)		
N-MSA	$ 50.00	$1.00
Price Band 4	50.00	1.00
Price Band 5	50.00	1.00
Price Band 6	50.00	1.00
OC12 (Supports Up to 12 Mapped STS1s)		
N-MSA	100.00	1.00
Price Band 4	100.00	1.00
Price Band 5	100.00	1.00
Price Band 6	100.00	1.00
OC48 (Supports Up to 48 Mapped STS1s)		
N-MSA	300.00	1.00
Price Band 4	300.00	1.00
Price Band 5	300.00	1.00
Price Band 6	300.00	1.00

(2) 3-year Commitment Period/Term Plan

OC3 (Supports Up to 3 Mapped STS1s)		
N-MSA	50.00	1.00
Price Band 4	50.00	1.00
Price Band 5	50.00	1.00
Price Band 6	50.00	1.00
OC12 (Supports Up to 12 Mapped STS1s)		
N-MSA	100.00	1.00
Price Band 4	100.00	1.00
Price Band 5	100.00	1.00
Price Band 6	100.00	1.00
OC48 (Supports Up to 48 Mapped STS1s)		
N-MSA	300.00	1.00
Price Band 4	300.00	1.00
Price Band 5	300.00	1.00
Price Band 6	300.00	1.00

Service availability limited. Refer to # footnote on Page 7-159.

© 2022 Frontier Communications Parent, Inc. All rights reserved

7. Special Access Service (Cont'd)

7.5 Rates and Charges (Cont'd)

7.5.25 Ethernet Private Line# (Cont'd)

(C) Access Aggregation Ports (Cont'd)
- per port

(3) 5-year Commitment Period/Term Plan

Interface Type	Monthly Rate	Nonrecurring Charge
OC3 (Supports Up to 3 Mapped STS1s)		
N-MSA	$50.00	$1.00
Price Band 4	50.00	1.00
Price Band 5	50.00	1.00
Price Band 6	50.00	1.00
OC12 (Supports Up to 12 Mapped STS1s)		
N-MSA	100.00	1.00
Price Band 4	100.00	1.00
Price Band 5	100.00	1.00
Price Band 6	100.00	1.00
OC48 (Supports Up to 48 Mapped STS1s)		
N-MSA	300.00	1.00
Price Band 4	300.00	1.00
Price Band 5	300.00	1.00
Price Band 6	300.00	1.00

(4) 7-year Commitment Period/Term Plan

OC3 (Supports Up to 3 Mapped STS1s)		
N-MSA	50.00	1.00
Price Band 4	50.00	1.00
Price Band 5	50.00	1.00
Price Band 6	50.00	1.00
OC12 (Supports Up to 12 Mapped STS1s)		
N-MSA	100.00	1.00
Price Band 4	100.00	1.00
Price Band 5	100.00	1.00
Price Band 6	100.00	1.00
OC48 (Supports Up to 48 Mapped STS1s)		
N-MSA	300.00	1.00
Price Band 4	300.00	1.00
Price Band 5	300.00	1.00
Price Band 6	300.00	1.00

Service availability limited. Refer to # footnote on Page 7-159.

© 2022 Frontier Communications Parent, Inc. All rights reserved

7. Special Access Service (Cont'd)

7.6 RESERVED FOR FUTURE USE

© 2022 Frontier Communications Parent, Inc. All rights reserved

8. SONET Special Access Services

8.1 General

SONET Special Access Services are Special Access/private line services provided with SONET technology.

(A) Definitions

Add/Drop Multiplexer, (ADM): an item of equipment that enables a SONET signal to be terminated or originated; it also allows lower level signals to be added or dropped from an optical carrier channel.

Dedicated SONET Service: a Telephone Company family of SONET based services that have a high level performance guarantee.

Inter-office (IOF) Mileage: a rate category that covers the transmission facilities between the serving wire centers associated with two customer designated premises, between a serving wire center and a Company Hub, between a serving wire center and a DSBT multiplexing location, between two Company Hubs, between two DSBT multiplexing locations, or between a customer designated premises and a DSOTS Protected or Unprotected Optical Transport Channel. IOF mileage rates are comprised of a fixed rate element and a per mile rate element.

Optical Carrier Rate, (OC #): a SONET transmission signal/speed, line rate, or service. The rates are in multiples of an OC1, which is equivalent to an STS1 (51.84 Mbps), SONET's basic rate.

OC Rate	Bandwidth Capacity
3	155.52 Mbps
12	622.08 Mbps
48	2.488 Gbps
192	9.953 Gbps

Optical Carrier Rate Concatenated, (OC#c): a "clear channel" SONET transmission using only one framing format. For example, an OC3 signal provides three STS1 frame formats with 3 overheads for a total capacity of 2268 bytes per Synchronous Payload envelope (SPE frame) in an OC3c signal, one STS3c frame format is used with one overhead, increasing the total payload capacity to 2340 bytes per SPE frame.

PORT: a rate element that denotes the standard interface arrangement which defines the technical characteristics associated with the type of facilities to which the service is to be connected at the Point of Termination (POT).

© 2022 Frontier Communications Parent, Inc. All rights reserved

8. SONET Special Access Services (Cont'd)

8.1 General (Cont'd)

(A) Definitions (Cont'd)

Synchronous Digital Hierarchy: denotes the European equivalent of SONET for the transmission of high capacity bandwidth over optical facilities.

SONET, (Synchronous Optical NETwork): the North American standard for the transmission of high capacity bandwidth over optical facilities. This synchronous transmission platform utilizes a modular multiplexing approach. Because of the large bandwidth, some of the payload is used to monitor, protect, manage and improve the transmission of the signal.

Synchronous Payload Envelope (SPE): the portion of the SONET transmission that contains the customer information.

Synchronous Transport Module Level (STM#): the European equivalent of a SONET STS3 (155.52 Mbps) signal.

Synchronous Transport Signal - Level, (STS1): a 51.84 Mbps signal that is the electrical equivalent of the OC1 or a DS3 with additional bits devoted to SONET overhead information. The STS1 signal consists of overhead and a SPE. The overhead part of the signal is used for controlling, framing and maintaining the signal. An STS1 can carry a DS3 or 28 DS1s when specifically formatted (Mapped). However, individual DS1s within a DS3 are not accessible within SONET and their performance cannot be guaranteed for this reason. These DS1s may be accessed using the Special Access DS3-to-DS1 multiplexing optional service.

Termination: a DSBT rate element that provides for the communication path between a customer designated premises and the serving wire center of that premises.

Virtual Tributary, (VT): a SONET structure designed for transport of sub-STS1 payloads; a subchannel of 1.728 Mbps within an STS1. A DS1 is mapped into the SONET format using a VT1.5 as a packaging mechanism that is internal to the SONET signal.

© 2022 Frontier Communications Parent, Inc. All rights reserved

8. SONET Special Access Services (Cont'd)

8.1 General (Cont'd)

(B) Technical Specifications

Technical specifications for SONET Access Services are the same as for Dedicated SONET Services and are delineated in the following Technical References:

GR-253-CORE, Issue 4
"Synchronous Optical Network (SONET) Transport Systems: Common Generic Criteria"

GR-1374-CORE, Issue 1
"SONET Inter-Carrier Interface Physical Layer Generic Criteria"

ANSI T1.105.01-2000 (R2005)
"Synchronous Optical Network (SONET) – Basic Description including Multiplex Structure, Rates and Formats".

Technical specifications for SDH (international SONET) Access Services are delineated in the following Technical References of the International Telecommunications Union:

ITU-T G.707/Y1322 Issued: January 2007

© 2022 Frontier Communications Parent, Inc. All rights reserved

8. SONET Special Access Services (Cont'd)

8.1 General (Cont'd)

(C) Network Channel Interfaces

The network channel interfaces define the bit rates that are available. Network Channel interfaces and codes are described below:

Service	Ports	Codes
OC3, OC3c	2 Fiber	O2SOF.D(B&F) O2QBF.LL O2QEF.LL
OC3, OC3c	4 Fiber, 1+1 Protection	O4SOF.D(B&F) O4QBF.LL
OC12, OC12c	2 Fiber	O2SOF.D(B&F) O2QBF.LL O2QEF.LL
OC12, OC12c	4 Fiber, 1+1 Protection	O4SOF.D(B&F) O4QBF.LL
STM1	2 Fiber	02SOF.B(C&E)
STM1	4 Fiber, 1+1 Protection	04SOF.B(C&E)
OC48, OC48c	2 Fiber	02S0F.D(B&F) O2QBF.LL O2QEF.LL
OC48, OC48c	4 Fiber, 1+1 Protection	04S0F.D(B&F) O4QBF.LL
OC192, OC192c	2 Fiber	02S0F.D(B&F) 02QBF.LL 02QEF.LL
OC192, OC192c	4 Fiber, 1+1 Protection	04S0F.D(B&F) 02QBF.LL

© 2022 Frontier Communications Parent, Inc. All rights reserved

8. SONET Special Access Services (Cont'd)

8.2 Dedicated SONET Broadband Transport (DSBT)#

(A) General Description

Dedicated SONET Broadband Transport, DSBT, provides high speed synchronous optical fiber-based full duplex data transmission capabilities. DSBT is provisioned over the Telephone Company's shared SONET network and provides customers SONET based broadband access transport with the following capacities:

OC3, OC3c & STM1	Transmission services operating at the terminating bit rate of 155.52 Mbps
OC12 & OC12c	Transmission services operating at the terminating bit rate of 622.08 Mbps
OC48 & OC48c	Transmission services operating at the terminating bit rate of 2.488 Gbps
OC192 & OC192c	Transmission services operating at the terminating bit rate of 9.953 Gbps.

DSBT services are provided where SONET facilities are available with sufficient bandwidth capacity to meet the customer's request. Generally, service is available in the same areas as noted for Dedicated SONET Shared Dual Path Service as described in Section 7.2.14(C)(2)(b). DSBT may be substituted for certain High Capacity Switched Access Entrance Facilities.

The following footnote is not applicable to the DS1 Port, DS3/STS1 Port or Node Mapping Rearrangement Charge rate elements of DSBT. Effective March 30, 2007, orders for new DSBT are no longer permitted. The Telephone Company will continue to provide DSBT pursuant to this Section 8.2 on any existing DSBT that is in-service as of March 30, 2007, or any order for DSBT that is placed with the Telephone Company prior to March 29, 2007 (collectively, Existing DSBT), subject to the following conditions:

a. For any Existing DSBT that is currently subscribed to a term plan (i.e., commitment periods of 3- and 5-years), the Telephone Company will continue to provide the Existing DSBT for an additional six (6) months beyond the expiration date of the customer's current commitment period, or until the customer replaces the Existing DSBT with a comparable Telephone Company provided service, or discontinues service, whichever comes first. Subject to availability of facilities and equipment, certain changes to the Existing DSBT are permitted provided that such changes do not require a new commitment period or an extension to an existing commitment period.

b. For any Existing DSBT provided on a month-to-month basis, the Telephone Company will continue to provide the Existing DSBT until September 30, 2007, or until the customer replaces the Existing DSBT with a comparable Telephone Company provided service, or discontinues service, whichever comes first. Changes are not permitted.

© 2022 Frontier Communications Parent, Inc. All rights reserved

8. SONET Special Access Services (Cont'd)

8.2 Dedicated SONET Broadband Transport (DSBT)# (Cont'd)

(A) General Description (Cont'd)

DSBT services consist of ports, terminations, interoffice (IOF) mileage, and multiplexers. With a DSBT service, the same payload content is maintained throughout the transmission path, i.e., if DS1s are mapped at one end, than they must also be mapped at the other end. DS1 and DS3/STS1 DSBT ports may also be used in combination with Telephone Company provided point-to-point SONET service.

DSBT services may be used to connect:

- a customer designated premises to another customer designated premises; i.e., a point-to-point service arrangement which consists of a port and a termination at each end/customer premises and IOF mileage when applicable.

- a customer designated premises to an equal speed OC3/OC3c, OC12/OC12c, or OC48/OC48c port of a Dedicated SONET Ring (DSR). This arrangement is not available with STM1 service.

- a customer designated premises to an equal speed OC3, OC12 or OC48 port or enhanced port of a DSR as an off-ring extension of the DSR. This arrangement requires purchase of the Multiplexing Capability. When multiplexed DSBT service is ordered as an off-ring extension of DSR, applicable DSR terms, conditions, rates and charges apply in place of DSBT port and termination charges for that portion of the service.

- a customer designated premises with an Dedicated SONET Entrance Facilities (DSEF) termination. When multiplexed DSBT service is ordered with a DSEF termination, applicable DSEF terms, conditions, rates and charges apply in place of DSBT port and termination charges for that portion of the service.

- a customer designated premises to a Collocated Interconnection arrangement as described in Section 19.2 following or a customer designated premises or Collocated Interconnection arrangement and a wire center where connection to an advanced data service occurs. DSBT ports are not provided at a Collocated Interconnection arrangement. STM1 is not available in a collocated arrangement or in conjunction with advanced data services.

- one or both customer designated premises may be connected to a DSOTS ring or Telephone Company provided DWDM ring service over an equal speed OC3/OC3c, OC12/OC12c, OC48/OC48c or OC192/OC192c Protected or Unprotected Optical Transport Channel. For each connection to a DSOTS or Telephone Company provided DWDM ring service Optical Transport Channel, the DSOTS Optical Transport Channel rate element, described in Section 7.5.24 preceding, or Telephone Company provided DWDM ring service Optical Transport Channel rate element applies in lieu of the DSBT Termination and DSBT Port rate elements. The DSBT Fiber Path Diversity optional feature is required when DSBT service is connected to a DSOTS or Telephone Company provided DWDM ring service Protected Optical Transport Channel.

Service availability limited. Refer to # footnote on Page 8-5.

© 2022 Frontier Communications Parent, Inc. All rights reserved

8. SONET Special Access Services (Cont'd)

8.2 Dedicated SONET Broadband Transport (DSBT)# (Cont'd)

(A) General Description (Cont'd)

- two Physically Collocated Interconnection arrangements, two Virtually Collocated Interconnection arrangements, or a combination of both. DSBT may only be used to connect Collocated Interconnection arrangements that are located in different wire centers. Except as set forth in Section 18 following, DSBT will not be provided between Collocated Interconnection arrangements that are located within the same wire center. DSBT channel mileage as set forth in Section 8.2(E)(3) following will apply based on the airline distance between the wire centers in accordance with the regulations set forth in Section 8.2 following.

- DSBT may also be connected to the following Telephone Company provided services, where such connections are technically and operationally feasible, as determined by the Telephone Company:

- dedicated SONET ring service
- DWDM ring service
- optical hubbing service
- SONET entrance facility service
- Ethernet private line service
- point-to-point SONET service

DSBT connections may be direct between the locations involved, provided through a DSBT multiplexing node or between DSBT multiplexing nodes where multiplexing to Special Access, or SONET Service of a lesser capacity occurs. A DSBT multiplexing node may be located in a Telephone Company wire center or at a customer designated premises.

DSBT services may be configured in any of the following ways:

OC3	3 STS1 channels which each contain: - a DS3 that is STS1 mapped - up to 28 DS1s that are VT-mapped - an STS1 channel without constraint to payload mapping
OC3c	A single concatenated STS3c channel
STM1	A SDH channel of 155.52 Mbps

Service availability limited. Refer to # footnote on Page 8-5.

© 2022 Frontier Communications Parent, Inc. All rights reserved

8. SONET Special Access Services (Cont'd)

8.2 Dedicated SONET Broadband Transport (DSBT)# (Cont'd)

(A) General Description (Cont'd)

DSBT services may be configured in any of the following ways: (Cont'd)

OC12	12 STS1 channels which each contain: - a DS3 that is STS1 mapped - up to 28 DS1s that are VT-mapped - an STS1 channel without constraint to payload mapping 4 concatenated STS3c channels 1 STS3c channel combined with 9 STS1 channels; or 2 STS3c channels combined with 6 STS1 channels; or 3 STS3c channels combined with 3 STS1 channels. These STS mapping options are subject to the utilization of the total OC12 capacity and require that each STS3 is contained within the same triplet (i.e., an STS3c must begin on STS1 timeslot 1, 4, 7, or 10).
OC12c	A single concatenated STS12c channel
OC48	48 STS1 channels which each contain: - a DS3 that is STS1 mapped - up to 28 DS1s that are VT mapped - an STS1 channel without constraint to payload mapping; or - 16 separate concatenated STS3c channels; or - 4 separate concatenated STS12c channels; or - any combination of the above configurations up to the total OC48 capacity
OC48c	A Single concatenated STS48c channel.
OC192	192 STS1 channels which each contain: - a DS3 that is STS1 mapped - up to 28 DS1s that are VT mapped - an STS1 channel without constraint to payload mapping; or - 64 separate concatenated STS3c channels; or - 16 separate concatenated STS12c channels; or - any combination of the above configurations up to the total OC192 capacity
OC192c	A single concatenated STS192c channel.

Service availability limited. Refer to # footnote on Page 8-5.

© 2022 Frontier Communications Parent, Inc. All rights reserved

8. SONET Special Access Services (Cont'd)

8.2 Dedicated SONET Broadband Transport (DSBT)# (Cont'd)

(B) Optional Features and Functions

The following optional features and functions are available for DSBT services:

(1) **Four Fiber 1 + 1 Port Protection**

Four Fiber 1+1 Port Protection provides a standby protection card for automatic protection from a fault in the working card. It is only available with compatible CPE and is ordered per port.

Four Fiber 1+1 Port Protection is not available for DSBT services that terminate at a customer premises served by a DSOTS or Telephone Company provided DWDM ring service Protected or Unprotected Optical Transport Channel.

(2) **Fiber Path Diversity**

This option provides additional loop survivability with the diverse routing of the working fiber pair and protect fiber pair. Fiber Path Diversity (FPD) with 1 X 1 protection will insure survivability from fiber faults except where common entrances exist. Fiber Path Diversity is available for terminations and IOF mileage. If FPD is desired, each termination and IOF mile of the service is ordered with this feature. Services with FPD have a 1 hour Special Access Service Guarantee (SASG).

Dual entrances at customer premises and Company wire centers are not considered a standard feature of this option, but may be provided where facilities are available. In instances where the customer premises and the serving wire center are in the same building, a customer may purchase this option in order to secure the 1 hour SASG; however, there may not be physical diversity in the building.

Fiber Path Diversity is not available for DSBT services that terminate at a customer premises served by a DSOTS or Telephone Company provided DWDM ring service Unprotected Optical Transport Channel.

Service availability limited. Refer to # footnote on Page 8-5.

© 2022 Frontier Communications Parent, Inc. All rights reserved

8. SONET Special Access Services (Cont'd)

8.2 Dedicated SONET Broadband Transport (DSBT)# (Cont'd)

(B) Optional Features and Functions (Cont'd)

(3) Multiplexing Capability

Multiplexing of DSBT can occur at either designated Telephone Company serving wire centers or at customer designated premises. When multiplexing occurs at designated Telephone Company serving wire centers, National Exchange Carrier Association, Inc., Tariff F.C.C. No. 4 identifies those serving wire centers where multiplexing options are available. When multiplexing occurs at a customer designated premises, all channels derived from the DSBT facility must terminate at that premises.

End-to-end services may be provided on channels of these facilities to the multiplexing node. The transmission performance for the end-to-end service provided between the locations will be that of the lower capacity or bit rate. Multiplexing capability will not be provided on a DSBT that is connecting to DSOTS or Telephone Company provided DWDM ring service.

The Telephone Company will commence billing the monthly rate for the facility to the DSBT multiplexing node on the date specified by the customer on the service order. Individual services utilizing these facilities may be ordered and/or installed subsequent to the installation of the facility to the multiplexing node. The customer will be billed for the channel termination, channel mileage, and DSBT multiplexing node at the time the facility is installed. DSBT port charges do not apply when DSBT is provided as a facility to a Collocated Interconnection arrangement. Individual service rates (by service type) will apply for the channel termination, channel mileage, any optional features associated with the service, and the low speed port necessary to drop the lower capacity service from the DSBT multiplexing node. These services will be billed as each individual service is installed.

Cascade multiplexing occurs when a DSBT channel is de-multiplexed to channels of a lesser capacity, and one of the lesser capacity channels is further de-multiplexed. For example, a DSBT OC3 is de-multiplexed to three DS3 channels and then one of the DS3 channels is further de-multiplexed to DS1 channels. When cascade multiplexing is performed, a charge for the additional multiplexing unit also applies. When cascade multiplexing occurs at different locations, interoffice mileage also applies between the multiplexing arrangements. Cascade multiplexing may not occur at the customer's designated premises.

Service availability limited. Refer to # footnote on Page 8-5.

© 2022 Frontier Communications Parent, Inc. All rights reserved

8. SONET Special Access Services (Cont'd)

8.2 Dedicated SONET Broadband Transport (DSBT)# (Cont'd)

(B) Optional Features and Functions (Cont'd)

(3) Multiplexing Capability (Cont'd)

The following DSBT multiplexing nodes are available.

(a) OC3 Multiplexing node

An arrangement that converts an OC3 (155.52 Mbps) channel to one of the following combinations.

- three groups of 28 DS1 channels
- one group of 28 DS1 channels and 2 DS3/STS1 channels
- two groups of 28 DS1 channels and 1 DS3/STS1 channel
- 3 DS3/STS1 channels

(b) OC12 Multiplexing node

An arrangement that converts an OC12 (622.080 Mbps) channel to one of the following combinations.

- 12 DS3/STS1 channels
- 9 DS3/STS1 channels and 1 OC3/OC3c channel
- 6 DS3/STS1 channels and 2 OC3/OC3c channels
- 3 DS3/STS1 channels and 3 OC3/OC3c channels
- 4 OC3/OC3c channels

(c) OC48 Multiplexing Node

An arrangement that converts an OC48 (2.488 Gbps) channel to one of the following combinations.

- 48 DS3/STS1 channels
- 4 OC3/OC3c channels and 36 DS3/STS1 channels
- 8 OC3/OC3c channels and 24 DS3/STS1 channels
- 16 OC3/OC3c channels
- 1 OC12/OC12c channels, 4 OC3/OC3c channels and 24 DS3/STS1 channels
- 1 OC12/OC12c channels, 8 OC3/OC3c channels and 12 DS3/STS1 channels
- 2 OC12/OC12c channels and 24 DS3/STS1 channels
- 2 OC12/OC12c channels and 8 OC3/OC3c channels
- 4 OC12/OC12c channels

When establishing DSBT under a Shared Network Arrangement, the regulations set forth in Section 5.2 preceding apply.

OC192 Multiplexing Node

Multiplexing capability is not available for OC192.

Service availability limited. Refer to # footnote on Page 8-5.

© 2022 Frontier Communications Parent, Inc. All rights reserved

8. SONET Special Access Services (Cont'd)

8.2 Dedicated SONET Broadband Transport (DSBT)# (Cont'd)

(C) Terms and Conditions

(1) DSBT is available for term periods of Month-to-Month, 3-year and 5-year. However, the minimum service period for DSBT service is one year. When Ethernet Private Line or Telephone Company provided Ethernet private line service customers under a three or five-year commitment period connect their Ethernet Private Line or Telephone Company provided Ethernet private line service Ethernet-to-SONET mapped service to DSBT, the DSBT port must be provided under the same length commitment period. When Ethernet Private Line or Telephone Company provided Ethernet private line service customers under a one-year commitment period connect their Ethernet Private Line or Telephone Company provided Ethernet private line service Ethernet-to-SONET mapped service to DSBT, the DSBT port will be provided at month-to-month rates. When Ethernet Private Line or Telephone Company provided Ethernet private line service customers under a seven-year commitment period connect their Ethernet Private Line or Telephone Company provided Ethernet private line service Ethernet-to-SONET mapped service to DSBT, the DSBT port will be provided subject to five-year plan rates, and the commitment period for the DSBT Port may be extended to be coterminous with the Ethernet Private Line or Telephone Company provided Ethernet private line service commitment period. When DSBT service connects to a DSOTS or Telephone Company provided DWDM ring service Optical Transport Channel, the DSBT port and the DSOTS or Telephone Company provided DWDM ring service Optical Transport Channel must be provided under the same length commitment period (i.e., either 3 year or 5 year term plan).

(2) At the expiration of a 3 or 5-year plan, the rates for the expiring term plan will continue until the customer either cancels service or requests a new term plan for its DSBT services.

(3) All rate elements of a point-to-point service must be in the same rate plan.

(4) OC3/OC3c, STM1, OC12/OC12c and OC48/OC48c point-to-point DSBT service arrangements (without the Multiplexing Capability described in Section 8.2(B)(3)) are provided subject to standard intervals. All other DSBT service arrangements are available based on negotiated intervals as described in 5.2.1(B) preceding.

(5) Additional charges may be billed the customer when the Company is levied charges for space and power required to place ADMs on the Company's side of the network interface.

(6) The customer is responsible to specify in its order for service what service configuration is to be contained in each service connection. For multiplexed services, the customer must also specify the DSBT multiplexing location involved. Any Special Access, or SONET Service derived from the DSBT facility to the Collocated Interconnection arrangement is subject to the terms and conditions and rates and charges for the type of service involved.

Service availability limited. Refer to # footnote on Page 8-5.

© 2022 Frontier Communications Parent, Inc. All rights reserved

8. SONET Special Access Services (Cont'd)

8.2 Dedicated SONET Broadband Transport (DSBT)# (Cont'd)

(C) Terms and Conditions (Cont'd)

(7) DSBT services are covered by a Special Access Service Guarantee, SASG, which is described in Section 2.7.1(A).

(8) A change in port or termination is treated as a discontinuance and new installation of service and will be assessed a new nonrecurring charge, if applicable.

(9) Connections of DSBT service to a physical or virtual collocation arrangement must be either a 2-fiber or 4-fiber connection. Rates and charges for Collocation Fiber Optic Cross-Connect Service and SPOT Bay Frame and Terminations are set forth in Sections 19.7.1 and 19.7.2 following.

(10) DSBT STM1 service is only provided when both customer designated premises use STM transmission. It is not available as a connection to a DSR, a Telephone Company provided dedicated SONET ring service or a collocated arrangement.

(11) For a rearrangement of a DSBT service that is terminated with a 2-fiber interface into a DSBT service that is terminated with a 4-fiber interface or vice versa, a Fiber Interface Rearrangement Charge as set forth in (E)(5)(a) for SONET Special Access and (E)(10)(a) for SONET Switched Access applies.

(12) For a rearrangement of the manner a multiplexing node of DSBT service is configured which involves a DS1 Port and/or a DS3/STS1 Port, a Node Mapping Rearrangement Charge as set forth in (E)(5)(b) for SONET Special Access and (E)(10)(b) for SONET Switched Access following applies. An example of a change in service configuration would be the rearrangement of an STS1 channel of DSBT OC3 that contains a DS3 that is STS1 mapped to an STS1 channel that contains up to 28 DS1s that are VT mapped. Service configuration options for DSBT channels are delineated in 8.2(A) preceding. The Node Mapping Rearrangement Charge applies for each multiplexing node of the DSBT service configured and not on a per channel basis within the DSBT service.

Service availability limited. Refer to # footnote on Page 8-5.

© 2022 Frontier Communications Parent, Inc. All rights reserved

8. SONET Special Access Services (Cont'd)

8.2 Dedicated SONET Broadband Transport (DSBT)# (Cont'd)

(C) Terms and Conditions (Cont'd)

(13) DSBT services are subject to termination liability.

If a customer disconnects service during the first year, termination liability will be calculated at 100% of the monthly charges for the unexpired portion of the first year, and 15% of the remainder of the term. If the disconnect occurs after the first year, termination liability is calculated at 15% of the monthly charges for the remainder of the plan period.

Termination liability will not apply:

- Reserved For Future Use. (C)
- when the service is changed to a DSBT plan with a longer commitment period.
- when the service is converted to a dedicated ring product as set forth in Section 23-1 following.
- when service is changed to a DSBT service of a higher bit rate (e.g., DSBT OC3/OC3c to DSBT OC12/OC12c, DSBT OC48/OC48c or DSBT OC192/OC192c).
- when the service is changed to/from a 2-fiber interface to a 4-fiber interface.
- when the service is changed from a point-to-point DSBT service to a multiplexed DSBT facility.

Service availability limited. Refer to # footnote on Page 8-5.

© 2024 Frontier Communications Parent, Inc. All rights reserved

8. SONET Special Access Services (Cont'd)

8.2 Dedicated SONET Broadband Transport (DSBT)# (Cont'd)

(C) Terms and Conditions (Cont'd)

(12) Compatible Channel Interface Codes

The following compatible channel interface combinations are used with DSBT.

Compatible CIs

02SOF*	04SMF.B, D, or F
04SOF*	04SMF.B, D, or F
02SOF*	04SNF.B, D, or F
02SOF.D	02CXF.A, B, or C
04SOF*	04SNF.B, D, or F
04SOF.D	02CXF.A, B, or C
04SMF*	04SMF.B, D, or F
04SMF*	04SOF.B, D, or F
04SNF*	04SNF.B, D, or F
04SNF*	02SOF.B, D, or F
04SNF*	04SOF.B, D, or F
02QBF.LL	
04QBF.LL	
02QEF.LL	

Service availability limited. Refer to # footnote on Page 8-5.

© 2022 Frontier Communications Parent, Inc. All rights reserved

8. SONET Special Access Services (Cont'd)

8.2 Dedicated SONET Broadband Transport (DSBT)# (Cont'd)

Rate Categories

Monthly recurring rates apply for Terminations, Ports, IOF Mileage (fixed and per mile), and Multiplexing Capability.

Nonrecurring charges apply for the installation of any Termination, Port, and Multiplexing Capability.

DSBT rate elements are as follows:

(1) Termination - basic service that carries a 4 hour SASG

(2) Termination with Fiber Path Diversity (FPD) - carries a 1 hour SASG

(3) Port - a two fiber network interface of the full service bandwidth

(4) Port with 4 Fiber 1+1 Protection (4F 1+1) - a 4 fiber interface consisting of 2 cards, one working and a second for standby

(5) IOF Fixed Mileage - one charge per service when mileage is applicable

(6) IOF Per Mile Mileage - basic transport service

(7) IOF Per Mile Mileage with Fiber Path Diversity (FPD) - carriers the 1 hour SASG

(8) Multiplexing Capability – an optional feature enabling DSBT to be de-multiplexed to channels of a lesser capacity.

(9) Fiber Interface Rearrangement Charge – one charge per service when rearrangement is applicable

(10) Node Mapping Rearrangement Charge – one charge per multiplexing node of service configured when rearrangement is applicable

Service availability limited. Refer to # footnote on Page 8-5.

© 2022 Frontier Communications Parent, Inc. All rights reserved

8. SONET Special Access Services (Cont'd)

8.2 Dedicated SONET Broadband Transport (DSBT)# (Cont'd)

(E) Rates and Charges

(1) Special Access Terminations

(a) Month-to-Month

Type	Recurring Rate	Nonrecurring Rate
OC3, OC3c or STM1		
- Basic		
N-MSA	$2,600.00	$1.00
Price Band 4	4,597.00	1.00
Price Band 5	4,597.00	1.00
Price Band 6	4,597.00	1.00
- W/ FPD		
N-MSA	3,700.00	1.00
Price Band 4	5,150.00	1.00
Price Band 5	5,150.00	1.00
Price Band 6	5,150.00	1.00
OC12, OC12c		
- Basic		
N-MSA	6,600.00	2.00
Price Band 4	9,800.00	2.00
Price Band 5	9,800.00	2.00
Price Band 6	9,800.00	2.00
- W/ FPD		
N-MSA	7,700.00	2.00
Price Band 4	10,500.00	2.00
Price Band 5	10,500.00	2.00
Price Band 6	10,500.00	2.00

Service availability limited. Refer to # footnote on Page 8-5.

© 2022 Frontier Communications Parent, Inc. All rights reserved

8. SONET Special Access Services (Cont'd)

8.2 Dedicated SONET Broadband Transport (DSBT)# (Cont'd)

(E) Rates and Charges (Cont'd)

(1) Special Access Terminations (Cont'd)

(a) Month-to-Month (Cont'd)

Type	Recurring Rate	Nonrecurring Rate
OC48, OC48c		
- Basic		
N-MSA	11,000.00	3.00
Price Band 4	11,000.00	3.00
Price Band 5	11,000.00	3.00
Price Band 6	11,000.00	3.00
- W/ FPD		
N-MSA	11,850.00	3.00
Price Band 4	11,850.00	3.00
Price Band 5	11,850.00	3.00
Price Band 6	11,850.00	3.00
OC192, OC192c		
- Basic		
N-MSA	$22,000.00	$4.00
Price Band 4	22,000.00	4.00
Price Band 5	22,000.00	4.00
Price Band 6	22,000.00	4.00
- W/ FPD		
N-MSA	23,700.00	4.00
Price Band 4	23,700.00	4.00
Price Band 5	23,700.00	4.00
Price Band 6	23,700.00	4.00

Service availability limited. Refer to # footnote on Page 8-5.

© 2022 Frontier Communications Parent, Inc. All rights reserved

8. SONET Special Access Services (Cont'd)

8.2 Dedicated SONET Broadband Transport (DSBT)# (Cont'd)

(E) Rates and Charges (Cont'd)

(1) Special Access Terminations (Cont'd)

(b) 3-Year

Type	Recurring Rate	Nonrecurring Rate
OC3, OC3c or STM1		
- Basic		
N-MSA	$2,200.00	$1.00
Price Band 4	3,325.00	1.00
Price Band 5	3,325.00	1.00
Price Band 6	3,325.00	1.00
- W/ FPD		
N-MSA	3,400.00	1.00
Price Band 4	3,800.00	1.00
Price Band 5	3,800.00	1.00
Price Band 6	3,800.00	1.00
OC12 or OC12c		
- Basic		
N-MSA	5,675.00	2.00
Price Band 4	6,530.00	2.00
Price Band 5	6,530.00	2.00
Price Band 6	6,530.00	2.00
- W/ FPD		
N-MSA	6,300.00	2.00
Price Band 4	7,280.00	2.00
Price Band 5	7,280.00	2.00
Price Band 6	7,280.00	2.00

Service availability limited. Refer to # footnote on Page 8-5.

© 2022 Frontier Communications Parent, Inc. All rights reserved

8. SONET Special Access Services (Cont'd)

8.2 Dedicated SONET Broadband Transport (DSBT)# (Cont'd)

(E) Rates and Charges (Cont'd)

(1) Special Access Terminations (Cont'd)

(b) 3-Year (Cont'd)

Type	Recurring Rate	Nonrecurring Rate
OC48, OC48c		
- Basic		
N-MSA	7,500.00	3.00
Price Band 4	7,500.00	3.00
Price Band 5	7,500.00	3.00
Price Band 6	7,500.00	3.00
- W/ FPD		
N-MSA	8,295.00	3.00
Price Band 4	8,295.00	3.00
Price Band 5	8,295.00	3.00
Price Band 6	8,295.00	3.00
OC192, OC192c		
- Basic		
N-MSA	$14,000.00	$4.00
Price Band 4	14,000.00	4.00
Price Band 5	14,000.00	4.00
Price Band 6	14,000.00	4.00
- W/ FPD		
N-MSA	16,900.00	4.00
Price Band 4	16,900.00	4.00
Price Band 5	16,900.00	4.00
Price Band 6	16,900.00	4.00

Service availability limited. Refer to # footnote on Page 8-5.

© 2022 Frontier Communications Parent, Inc. All rights reserved

8. SONET Special Access Services (Cont'd)

8.2 Dedicated SONET Broadband Transport (DSBT)# (Cont'd)

(E) Rates and Charges (Cont'd)

(1) Special Access Terminations (Cont'd)

(c) 5-Year

Type	Recurring Rate	Nonrecurring Rate
OC3, OC3c or STM1		
- Basic		
N-MSA	$1,900.00	$1.00
Price Band 4	3,200.00	1.00
Price Band 5	3,200.00	1.00
Price Band 6	3,200.00	1.00
- W/ FPD		
N-MSA	3,000.00	1.00
Price Band 4	3,700.00	1.00
Price Band 5	3,700.00	1.00
Price Band 6	3,700.00	1.00
OC12 or OC12c		
- Basic		
N-MSA	4,600.00	2.00
Price Band 4	4,500.00	2.00
Price Band 5	4,500.00	2.00
Price Band 6	4,500.00	2.00
- W/ FPD		
N-MSA	5,075.00	2.00
Price Band 4	4,950.00	2.00
Price Band 5	4,950.00	2.00
Price Band 6	4,950.00	2.00

Service availability limited. Refer to # footnote on Page 8-5.

© 2022 Frontier Communications Parent, Inc. All rights reserved

8. SONET Special Access Services (Cont'd)

8.2 Dedicated SONET Broadband Transport (DSBT)# (Cont'd)

(E) Rates and Charges (Cont'd)

(1) Special Access Terminations (Cont'd)

(c) 5-Year (Cont'd)

Type	Recurring Rate	Nonrecurring Rate
OC48, OC48c		
- Basic		
N-MSA	6,350.00	3.00
Price Band 4	6,350.00	3.00
Price Band 5	6,350.00	3.00
Price Band 6	6,350.00	3.00
- W/ FPD		
N-MSA	6,985.00	3.00
Price Band 4	6,985.00	3.00
Price Band 5	6,985.00	3.00
Price Band 6	6,985.00	3.00
OC192, OC192c		
- Basic		
N-MSA	$11,000.00	$4.00
Price Band 4	11,000.00	4.00
Price Band 5	11,000.00	4.00
Price Band 6	11,000.00	4.00
- W/ FPD		
N-MSA	11,850.00	4.00
Price Band 4	11,850.00	4.00
Price Band 5	11,850.00	4.00
Price Band 6	11,850.00	4.00

Service availability limited. Refer to # footnote on Page 8-5.

© 2022 Frontier Communications Parent, Inc. All rights reserved

8. SONET Special Access Services (Cont'd)

8.2 Dedicated SONET Broadband Transport (DSBT)# (Cont'd)

(E) Rates and Charges (Cont'd)

(2) Special Access Ports

(a) Month-to-Month

Type	Recurring Rate	Nonrecurring Rate
OC3		
- 2 Fiber		
N-MSA	$250.00	$1.00
Price Band 4	283.00	1.00
Price Band 5	283.00	1.00
Price Band 6	283.00	1.00
- 4 Fiber 1+1		
N-MSA	500.00	1.00
Price Band 4	525.00	1.00
Price Band 5	525.00	1.00
Price Band 6	525.00	1.00
OC3c or STM1		
- 2 Fiber		
N-MSA	250.00	1.00
Price Band 4	336.00	1.00
Price Band 5	336.00	1.00
Price Band 6	336.00	1.00
- 4 Fiber 1+1		
N-MSA	500.00	1.00
Price Band 4	630.00	1.00
Price Band 5	630.00	1.00
Price Band 6	630.00	1.00

Service availability limited. Refer to # footnote on Page 8-5.

© 2022 Frontier Communications Parent, Inc. All rights reserved

8. SONET Special Access Services (Cont'd)

8.2 Dedicated SONET Broadband Transport (DSBT)# (Cont'd)

(E) Rates and Charges (Cont'd)

(2) Special Access Ports (Cont'd)

(a) Month-to-Month (Cont'd)

Type	Recurring Rate	Nonrecurring Rate
OC12		
- 2 Fiber		
N-MSA	$625.00	$2.00
Price Band 4	630.00	2.00
Price Band 5	630.00	2.00
Price Band 6	630.00	2.00
- 4 Fiber 1+1		
N-MSA	1,250.00	2.00
Price Band 4	1,200.00	2.00
Price Band 5	1,200.00	2.00
Price Band 6	1,200.00	2.00
OC12c		
- 2 Fiber		
N-MSA	625.00	2.00
Price Band 4	730.00	2.00
Price Band 5	730.00	2.00
Price Band 6	730.00	2.00
- 4 Fiber 1+1		
N-MSA	1,250.00	2.00
Price Band 4	1,400.00	2.00
Price Band 5	1,400.00	2.00
Price Band 6	1,400.00	2.00

Service availability limited. Refer to # footnote on Page 8-5.

© 2022 Frontier Communications Parent, Inc. All rights reserved

8. SONET Special Access Services (Cont'd)

8.2 Dedicated SONET Broadband Transport (DSBT)# (Cont'd)

(E) Rates and Charges (Cont'd)

(2) Special Access Ports (Cont'd)

(a) Month-to-Month (Cont'd)

Type	Recurring Rate	Nonrecurring Rate
OC48		
- 2 Fiber		
N-MSA	$1,050.00	$3.00
Price Band 4	1,050.00	3.00
Price Band 5	1,050.00	3.00
Price Band 6	1,050.00	3.00
- 4 Fiber 1+1		
N-MSA	2,100.00	3.00
Price Band 4	2,100.00	3.00
Price Band 5	2,100.00	3.00
Price Band 6	2,100.00	3.00
OC48c		
- 2 Fiber		
N-MSA	1,100.00	3.00
Price Band 4	1,100.00	3.00
Price Band 5	1,100.00	3.00
Price Band 6	1,100.00	3.00
- 4 Fiber 1+1		
N-MSA	2,200.00	3.00
Price Band 4	2,200.00	3.00
Price Band 5	2,200.00	3.00
Price Band 6	2,200.00	3.00

Service availability limited. Refer to # footnote on Page 8-5.

© 2022 Frontier Communications Parent, Inc. All rights reserved

8. SONET Special Access Services (Cont'd)

8.2 Dedicated SONET Broadband Transport (DSBT)# (Cont'd)

(E) Rates and Charges (Cont'd)

(2) Special Access Ports (Cont'd)

(a) Month-to-Month (Cont'd)

Type	Recurring Rate	Nonrecurring Rate
OC192		
- 2 Fiber		
N-MSA	$2,500.00	$1.00
Price Band 4	2,500.00	1.00
Price Band 5	2,500.00	1.00
Price Band 6	2,500.00	1.00
- 4 Fiber 1+1		
N-MSA	5,000.00	1.00
Price Band 4	5,000.00	1.00
Price Band 5	5,000.00	1.00
Price Band 6	5,000.00	1.00
OC192c		
- 2 Fiber		
N-MSA	2,700.00	1.00
Price Band 4	2,700.00	1.00
Price Band 5	2,700.00	1.00
Price Band 6	2,700.00	1.00
- 4 Fiber 1+1		
N-MSA	5,200.00	1.00
Price Band 4	5,200.00	1.00
Price Band 5	5,200.00	1.00
Price Band 6	5,200.00	1.00

Service availability limited. Refer to # footnote on Page 8-5.

© 2022 Frontier Communications Parent, Inc. All rights reserved

8. SONET Special Access Services (Cont'd)

8.2 Dedicated SONET Broadband Transport (DSBT)# (Cont'd)

(E) Rates and Charges (Cont'd)

(2) Special Access Ports (Cont'd)

(b) 3-Year

Type	Recurring Rate	Nonrecurring Rate
OC3		
- 2 Fiber		
N-MSA	$200.00	$1.00
Price Band 4	230.00	1.00
Price Band 5	230.00	1.00
Price Band 6	230.00	1.00
- 4 Fiber 1+1		
N-MSA	400.00	1.00
Price Band 4	450.00	1.00
Price Band 5	450.00	1.00
Price Band 6	450.00	1.00
OC3c or STM1		
- 2 Fiber		
N-MSA	200.00	1.00
Price Band 4	260.00	1.00
Price Band 5	260.00	1.00
Price Band 6	260.00	1.00
- 4 Fiber 1+1		
N-MSA	400.00	1.00
Price Band 4	480.00	1.00
Price Band 5	480.00	1.00
Price Band 6	480.00	1.00

Service availability limited. Refer to # footnote on Page 8-5.

© 2022 Frontier Communications Parent, Inc. All rights reserved

8. SONET Special Access Services (Cont'd)

8.2 Dedicated SONET Broadband Transport (DSBT)# (Cont'd)

(E) Rates and Charges (Cont'd)

(2) Special Access Ports (Cont'd)

(b) 3-Year (Cont'd)

Type	Recurring Rate	Nonrecurring Rate
OC12		
- 2 Fiber		
N-MSA	$500.00	$2.00
Price Band 4	460.00	2.00
Price Band 5	460.00	2.00
Price Band 6	460.00	2.00
- 4 Fiber 1+1		
N-MSA	1,000.00	2.00
Price Band 4	900.00	2.00
Price Band 5	900.00	2.00
Price Band 6	900.00	2.00
OC12c		
- 2 Fiber		
N-MSA	500.00	2.00
Price Band 4	480.00	2.00
Price Band 5	480.00	2.00
Price Band 6	480.00	2.00
- 4 Fiber 1+1		
N-MSA	1,000.00	2.00
Price Band 4	930.00	2.00
Price Band 5	930.00	2.00
Price Band 6	930.00	2.00

Service availability limited. Refer to # footnote on Page 8-5.

© 2022 Frontier Communications Parent, Inc. All rights reserved

8. SONET Special Access Services (Cont'd)

8.2 Dedicated SONET Broadband Transport (DSBT)# (Cont'd)

(E) Rates and Charges (Cont'd)

(2) Special Access Ports (Cont'd)

(b) 3-Year (Cont'd)

Type	Recurring Rate	Nonrecurring Rate
OC48		
- 2 Fiber		
N-MSA	$900.00	$3.00
Price Band 4	900.00	3.00
Price Band 5	900.00	3.00
Price Band 6	900.00	3.00
- 4 Fiber 1+1		
N-MSA	1,800.00	3.00
Price Band 4	1,800.00	3.00
Price Band 5	1,800.00	3.00
Price Band 6	1,800.00	3.00
OC48c		
- 2 Fiber		
N-MSA	950.00	3.00
Price Band 4	950.00	3.00
Price Band 5	950.00	3.00
Price Band 6	950.00	3.00
- 4 Fiber 1+1		
N-MSA	1,900.00	3.00
Price Band 4	1,900.00	3.00
Price Band 5	1,900.00	3.00
Price Band 6	1,900.00	3.00

Service availability limited. Refer to # footnote on Page 8-5.

© 2022 Frontier Communications Parent, Inc. All rights reserved

8. SONET Special Access Services (Cont'd)

8.2 Dedicated SONET Broadband Transport (DSBT)# (Cont'd)

(E) Rates and Charges (Cont'd)

(2) Special Access Ports (Cont'd)

(b) 3-Year (Cont'd)

Type	Recurring Rate	Nonrecurring Rate
OC192		
- 2 Fiber		
N-MSA	$2,100.00	$1.00
Price Band 4	2,100.00	1.00
Price Band 5	2,100.00	1.00
Price Band 6	2,100.00	1.00
- 4 Fiber 1+1		
N-MSA	4,200.00	1.00
Price Band 4	4,200.00	1.00
Price Band 5	4,200.00	1.00
Price Band 6	4,200.00	1.00
OC192c		
- 2 Fiber		
N-MSA	2,300.00	1.00
Price Band 4	2,300.00	1.00
Price Band 5	2,300.00	1.00
Price Band 6	2,300.00	1.00
- 4 Fiber 1+1		
N-MSA	4,400.00	1.00
Price Band 4	4,400.00	1.00
Price Band 5	4,400.00	1.00
Price Band 6	4,400.00	1.00

Service availability limited. Refer to # footnote on Page 8-5.

© 2022 Frontier Communications Parent, Inc. All rights reserved

8. SONET Special Access Services (Cont'd)

8.2 Dedicated SONET Broadband Transport (DSBT)# (Cont'd)

(E) Rates and Charges (Cont'd)

(2) Special Access Ports (Cont'd)

(b) 5-Year

Type	Recurring Rate	Nonrecurring Rate
OC3		
- 2 Fiber		
N-MSA	$150.00	$1.00
Price Band 4	160.00	1.00
Price Band 5	160.00	1.00
Price Band 6	160.00	1.00
- 4 Fiber 1+1		
N-MSA	300.00	1.00
Price Band 4	300.00	1.00
Price Band 5	300.00	1.00
Price Band 6	300.00	1.00
OC3c or STM1		
- 2 Fiber		
N-MSA	150.00	1.00
Price Band 4	180.00	1.00
Price Band 5	180.00	1.00
Price Band 6	180.00	1.00
- 4 Fiber 1+1		
N-MSA	300.00	1.00
Price Band 4	320.00	1.00
Price Band 5	320.00	1.00
Price Band 6	320.00	1.00

Service availability limited. Refer to # footnote on Page 8-5.

© 2022 Frontier Communications Parent, Inc. All rights reserved

8. SONET Special Access Services (Cont'd)

8.2 Dedicated SONET Broadband Transport (DSBT)# (Cont'd)

(E) Rates and Charges (Cont'd)

(2) Special Access Ports (Cont'd)

(b) 5-Year (Cont'd)

Type	Recurring Rate	Nonrecurring Rate
OC12		
- 2 Fiber		
N-MSA	$400.00	$2.00
Price Band 4	320.00	2.00
Price Band 5	320.00	2.00
Price Band 6	320.00	2.00
- 4 Fiber 1+1		
N-MSA	800.00	2.00
Price Band 4	600.00	2.00
Price Band 5	600.00	2.00
Price Band 6	600.00	2.00
OC12c		
- 2 Fiber		
N-MSA	400.00	2.00
Price Band 4	360.00	2.00
Price Band 5	360.00	2.00
Price Band 6	360.00	2.00
- 4 Fiber 1+1		
N-MSA	800.00	2.00
Price Band 4	650.00	2.00
Price Band 5	650.00	2.00
Price Band 6	650.00	2.00

Service availability limited. Refer to # footnote on Page 8-5.

© 2022 Frontier Communications Parent, Inc. All rights reserved

8. SONET Special Access Services (Cont'd)

8.2 Dedicated SONET Broadband Transport (DSBT)# (Cont'd)

(E) Rates and Charges (Cont'd)

(2) Special Access Ports (Cont'd)

(b) 5-Year (Cont'd)

Type	Recurring Rate	Nonrecurring Rate
OC48		
- 2 Fiber		
N-MSA	$600.00	$3.00
Price Band 4	600.00	3.00
Price Band 5	600.00	3.00
Price Band 6	600.00	3.00
- 4 Fiber 1+1		
N-MSA	1,200.00	3.00
Price Band 4	1,200.00	3.00
Price Band 5	1,200.00	3.00
Price Band 6	1,200.00	3.00
OC48c		
- 2 Fiber		
N-MSA	650.00	3.00
Price Band 4	600.00	3.00
Price Band 5	600.00	3.00
Price Band 6	600.00	3.00
- 4 Fiber 1+1		
N-MSA	1,300.00	3.00
Price Band 4	600.00	3.00
Price Band 5	600.00	3.00
Price Band 6	600.00	3.00

Service availability limited. Refer to # footnote on Page 8-5.

© 2022 Frontier Communications Parent, Inc. All rights reserved

8. SONET Special Access Services (Cont'd)

8.2 Dedicated SONET Broadband Transport (DSBT)# (Cont'd)

(E) Rates and Charges (Cont'd)

(2) Special Access Ports (Cont'd)

(b) 5-Year (Cont'd)

Type	Recurring Rate	Nonrecurring Rate
OC192		
- 2 Fiber		
N-MSA	$1,800.00	$1.00
Price Band 4	1,800.00	1.00
Price Band 5	1,800.00	1.00
Price Band 6	1,800.00	1.00
- 4 Fiber 1+1		
N-MSA	3,600.00	1.00
Price Band 4	3,600.00	1.00
Price Band 5	3,600.00	1.00
Price Band 6	3,600.00	1.00
OC192c		
- 2 Fiber		
N-MSA	2,000.00	1.00
Price Band 4	2,000.00	1.00
Price Band 5	2,000.00	1.00
Price Band 6	2,000.00	1.00
- 4 Fiber 1+1		
N-MSA	3,800.00	1.00
Price Band 4	3,800.00	1.00
Price Band 5	3,800.00	1.00
Price Band 6	3,800.00	1.00

Service availability limited. Refer to # footnote on Page 8-5.

© 2022 Frontier Communications Parent, Inc. All rights reserved

8. SONET Special Access Services (Cont'd)

8.2 Dedicated SONET Broadband Transport (DSBT)# (Cont'd)

(E) Rates and Charges (Cont'd)

(3) Special Access IOF Mileage

(a) Month-to-Month

Type	Monthly Recurring Rate Fixed	Monthly Recurring Rate Per Mile
OC3, OC3c, or STM1		
N-MSA	$2,500.00	$300.00
Price Band 4	2,625.00	462.00
Price Band 5	2,625.00	462.00
Price Band 6	2,625.00	462.00
OC3, OC3c, or STM1 w/FPD		
N-MSA	2,500.00	375.00
Price Band 4	2,625.00	485.00
Price Band 5	2,625.00	485.00
Price Band 6	2,625.00	485.00
OC12 or OC12c		
N-MSA	6,100.00	575.00
Price Band 4	6,000.00	1,160.00
Price Band 5	6,000.00	1,160.00
Price Band 6	6,000.00	1,160.00
OC12 or OC12c w/FPD		
N-MSA	6,100.00	650.00
Price Band 4	6,000.00	1,475.00
Price Band 5	6,000.00	1,475.00
Price Band 6	6,000.00	1,475.00

Service availability limited. Refer to # footnote on Page 8-5.

© 2022 Frontier Communications Parent, Inc. All rights reserved

8. SONET Special Access Services (Cont'd)

8.2 Dedicated SONET Broadband Transport (DSBT)# (Cont'd)

(E) Rates and Charges (Cont'd)

(3) Special Access IOF Mileage

(a) Month-to-Month

Type	Monthly Recurring Rate Fixed	Monthly Recurring Rate Per Mile
OC48 or OC48c Basic		
N-MSA	10,890.00	2,950.00
Price Band 4	10,890.00	2,950.00
Price Band 5	10,890.00	2,950.00
Price Band 6	10,890.00	2,950.00
OC48 or OC48c w/FPD		
N-MSA	10,890.00	3,250.00
Price Band 4	10,890.00	3,250.00
Price Band 5	10,890.00	3,250.00
Price Band 6	10,890.00	3,250.00
OC192 or OC192c Basic		
N-MSA	$15,900.00	$2,950.00
Price Band 4	15,900.00	2,950.00
Price Band 5	15,900.00	2,950.00
Price Band 6	15,900.00	2,950.00
OC192 or OC192c w/FPD		
N-MSA	15,900.00	3,250.00
Price Band 4	15,900.00	3,250.00
Price Band 5	15,900.00	3,250.00
Price Band 6	15,900.00	3,250.00

Service availability limited. Refer to # footnote on Page 8-5.

© 2022 Frontier Communications Parent, Inc. All rights reserved

8. SONET Special Access Services (Cont'd)

8.2 Dedicated SONET Broadband Transport (DSBT)# (Cont'd)

(E) Rates and Charges (Cont'd)

(3) Special Access IOF Mileage (Cont'd)

(b) 3-Year

Type	Monthly Recurring Rate Fixed	Monthly Recurring Rate Per Mile
OC3, OC3c, or STM1		
N-MSA	$2,200.00	$200.00
Price Band 4	2,310.00	324.00
Price Band 5	2,310.00	324.00
Price Band 6	2,310.00	324.00
0C3, OC3C, or STM1 w/FPD		
N-MSA	2,200.00	250.00
Price Band 4	2,310.00	346.00
Price Band 5	2,310.00	346.00
Price Band 6	2,310.00	346.00
OC12 or OC12c		
N-MSA	5,130.00	425.00
Price Band 4	5,000.00	900.00
Price Band 5	5,000.00	900.00
Price Band 6	5,000.00	900.00
OC12 or OC12c w/FPD		
N-MSA	5,130.00	500.00
Price Band 4	5,000.00	1,160.00
Price Band 5	5,000.00	1,160.00
Price Band 6	5,000.00	1,160.00

Service availability limited. Refer to # footnote on Page 8-5.

© 2022 Frontier Communications Parent, Inc. All rights reserved

8. SONET Special Access Services (Cont'd)

8.2 Dedicated SONET Broadband Transport (DSBT)# (Cont'd)

(E) Rates and Charges (Cont'd)

(3) Special Access IOF Mileage (Cont'd)

(b) 3-Year (Cont'd)

Type	Monthly Recurring Rate Fixed	Monthly Recurring Rate Per Mile
OC48 or OC48c Basic		
N-MSA	8,595.00	2,350.00
Price Band 4	8,595.00	2,350.00
Price Band 5	8,595.00	2,350.00
Price Band 6	8,595.00	2,350.00
OC48 or OC48c w/FPD		
N-MSA	8,595.00	2,600.00
Price Band 4	8,595.00	2,600.00
Price Band 5	8,595.00	2,600.00
Price Band 6	8,595.00	2,600.00
OC192 or OC192c Basic		
N-MSA	$13,000.00	$2,350.00
Price Band 4	13,000.00	2,350.00
Price Band 5	13,000.00	2,350.00
Price Band 6	13,000.00	2,350.00
OC192 or OC192c w/FPD		
N-MSA	13,000.00	2,600.00
Price Band 4	13,000.00	2,600.00
Price Band 5	13,000.00	2,600.00
Price Band 6	13,000.00	2,600.00

Service availability limited. Refer to # footnote on Page 8-5.

© 2022 Frontier Communications Parent, Inc. All rights reserved

8. SONET Special Access Services (Cont'd)

8.2 Dedicated SONET Broadband Transport (DSBT)# (Cont'd)

(E) Rates and Charges (Cont'd)

(3) Special Access IOF Mileage (Cont'd)

(c) 5-Year

Type	Monthly Recurring Rate Fixed	Monthly Recurring Rate Per Mile
OC3, OC3c, or STM1		
N-MSA	$1,800.00	$125.00
Price Band 4	1,900.00	178.00
Price Band 5	1,900.00	178.00
Price Band 6	1,900.00	178.00
OC3, OC3c, or STM1 w/FPD		
N-MSA	1,800.00	150.00
Price Band 4	1,900.00	199.00
Price Band 5	1,900.00	199.00
Price Band 6	1,900.00	199.00
OC12 or OC12c		
N-MSA	3,590.00	300.00
Price Band 4	3,500.00	450.00
Price Band 5	3,500.00	450.00
Price Band 6	3,500.00	450.00
OC12 or OC12c w/FPD		
N-MSA	3,590.00	375.00
Price Band 4	3,500.00	525.00
Price Band 5	3,500.00	525.00
Price Band 6	3,500.00	525.00

Service availability limited. Refer to # footnote on Page 8-5.

© 2022 Frontier Communications Parent, Inc. All rights reserved

8. SONET Special Access Services (Cont'd)

8.2 Dedicated SONET Broadband Transport (DSBT)# (Cont'd)

(E) Rates and Charges (Cont'd)

(3) Special Access IOF Mileage (Cont'd)

(c) 5-Year

Type	Monthly Recurring Rate Fixed	Monthly Recurring Rate Per Mile
OC48 or OC48c Basic		
N-MSA	6,300.00	1,250.00
Price Band 4	6,300.00	1,250.00
Price Band 5	6,300.00	1,250.00
Price Band 6	6,300.00	1,250.00
OC48 or OC48c w/FPD		
N-MSA	6,300.00	1,380.00
Price Band 4	6,300.00	1,380.00
Price Band 5	6,300.00	1,380.00
Price Band 6	6,300.00	1,380.00
OC192 or OC192c Basic		
N-MSA	$11,500.00	$1,250.00
Price Band 4	11,500.00	1,250.00
Price Band 5	11,500.00	1,250.00
Price Band 6	11,500.00	1,250.00
OC192 or OC192c w/FPD		
N-MSA	11,500.00	1,380.00
Price Band 4	11,500.00	1,380.00
Price Band 5	11,500.00	1,380.00
Price Band 6	11,500.00	1,380.00

Service availability limited. Refer to # footnote on Page 8-5.

© 2022 Frontier Communications Parent, Inc. All rights reserved

8. SONET Switched Access Services (Cont'd)

8.2 Dedicated SONET Broadband Transport (DSBT)# (Cont'd)

(E) Rates and Charges (Cont'd)

(4) Special Access Multiplexing Capability

(a) Per Arrangement*

Type	Recurring Rate	Nonrecurring Rate
OC3		
- Month-to-Month		
N-MSA	$2,228.00	$1,599.00
Price Band 4	2,228.00	1,599.00
Price Band 5	2,228.00	1,599.00
Price Band 6	2,228.00	1,599.00
- 3-Year		
N-MSA	1,759.00	1,599.00
Price Band 4	1,759.00	1,599.00
Price Band 5	1,759.00	1,599.00
Price Band 6	1,759.00	1,599.00
- 5-Year		
N-MSA	1,290.00	1,599.00
Price Band 4	1,290.00	1,599.00
Price Band 5	1,290.00	1,599.00
Price Band 6	1,290.00	1,599.00
OC12		
- Month-to-Month		
N-MSA	3,943.00	1,599.00
Price Band 4	3,943.00	1,599.00
Price Band 5	3,943.00	1,599.00
Price Band 6	3,943.00	1,599.00
- 3-Year		
N-MSA	3,091.00	1,599.00
Price Band 4	3,091.00	1,599.00
Price Band 5	3,091.00	1,599.00
Price Band 6	3,091.00	1,599.00
- 5-Year		
N-MSA	2,238.00	1,599.00
Price Band 4	2,238.00	1,599.00
Price Band 5	2,238.00	1,599.00
Price Band 6	2,238.00	1,599.00

Service availability limited. Refer to # footnote on Page 8-5.

© 2022 Frontier Communications Parent, Inc. All rights reserved

8. SONET Switched Access Services (Cont'd)

8.2 Dedicated SONET Broadband Transport (DSBT)# (Cont'd)

(E) Rates and Charges (Cont'd)

(4) Special Access Multiplexing Capability (Cont'd)

(a) Per Arrangement* (Cont'd)

Type	Recurring Rate	Nonrecurring Rate
OC48		
- Month-to-Month		
N-MSA	$10,658.00	$1,599.00
Price Band 4	10,658.00	1,599.00
Price Band 5	10,658.00	1,599.00
Price Band 6	10,658.00	1,599.00
- 3-Year		
N-MSA	7,631.00	1,599.00
Price Band 4	7,631.00	1,599.00
Price Band 5	7,631.00	1,599.00
Price Band 6	7,631.00	1,599.00
- 5-Year		
N-MSA	4,604.00	1,599.00
Price Band 4	4,604.00	1,599.00
Price Band 5	4,604.00	1,599.00
Price Band 6	4,604.00	1,599.00

* Rates are applicable to all Rate Zones.

Service availability limited. Refer to # footnote on Page 8-5.

© 2022 Frontier Communications Parent, Inc. All rights reserved

8. SONET Special Access Services (Cont'd)

8.2 Dedicated SONET Broadband Transport (DSBT)# (Cont'd)

(E) Rates and Charges (Cont'd)

(4) Special Access Multiplexing Capability (Cont'd)

(b) Low Speed Ports*
- Per Port

Type	Recurring Rate	Nonrecurring Rate
Month-to-Month		
DS1 Port		
Price Band 4	28.00	None
Price Band 5	28.00	None
Price Band 6	28.00	None
DS3/STS1 Port		
Price Band 4	115.00	None
Price Band 5	115.00	None
Price Band 6	115.00	None
OC3/OC3c/STM1 Port	Rates and Charges are set forth in (E)(2) preceding	
OC12/OC12c Port	Rates and Charges are set forth in (E)(2) preceding	

* Rates are applicable to all Rate Zones.

Service availability limited. Refer to # footnote on Page 8-5.

© 2022 Frontier Communications Parent, Inc. All rights reserved

8. SONET Special Access Services (Cont'd)

8.2 Dedicated SONET Broadband Transport (DSBT)# (Cont'd)

(E) Rates and Charges (Cont'd)

(4) Special Access Multiplexing Capability (Cont'd)

(b) Low Speed Ports* (Cont'd)
- Per Port

Type	Recurring Rate	Nonrecurring Rate
3-Year		
DS1 Port		
Price Band 4	28.00	None
Price Band 5	28.00	None
Price Band 6	28.00	None
DS3/STS1 Port		
Price Band 4	115.00	None
Price Band 5	115.00	None
Price Band 6	115.00	None
OC3/OC3c/STM1 Port	Rates and Charges are set forth in (E)(2) preceding	
OC12/OC12c Port	Rates and Charges are set forth in (E)(2) preceding	
5-Year		
DS1 Port		
Price Band 4	28.00	None
Price Band 5	28.00	None
Price Band 6	28.00	None
DS3/STS1 Port		
Price Band 4	115.00	None
Price Band 5	115.00	None
Price Band 6	115.00	None
OC3/OC3c/STM1 Port	Rates and Charges are set forth in (E)(2) preceding	
OC12/OC12c Port	Rates and Charges are set forth in (E)(2) preceding	

* Rates are applicable to all Rate Zones.

Service availability limited. Refer to # footnote on Page 8-5.

© 2022 Frontier Communications Parent, Inc. All rights reserved

8. SONET Special Access Services (Cont'd)

8.2 Dedicated SONET Broadband Transport (DSBT)# (Cont'd)

(E) Rates and Charges (Cont'd)

(5) Service Rearrangements*

(a) Fiber Interface Rearrangement

	Nonrecurring Charge
2-Fiber to 4-Fiber or vice versa, per interface	
N-MSA*	$ 347.00
Price Band 4	347.00
Price Band 5	347.00
Price Band 6	347.00

(b) Multiplexing Node Mapping Rearrangement

	Nonrecurring Charge
Per multiplexing node	
Price Band 4	1,599.00
Price Band 5	1,599.00
Price Band 6	1,599.00

* Rates are applicable to all Rate Zones.

Service availability limited. Refer to # footnote on Page 8-5.

© 2022 Frontier Communications Parent, Inc. All rights reserved

8. SONET Switched Access Services (Cont'd)

8.2 Dedicated SONET Broadband Transport (DSBT)# (Cont'd)

(E) Rates and Charges (Cont'd)

(6) Switched Access Terminations

(a) Month-to-Month*

Type	Recurring Rate	Nonrecurring Rate
OC3		
- Basic N-MSA	$2,600.00	$1.00
- W/ FPD N-MSA	3,700.00	1.00
OC12		
- Basic N-MSA	6,,600.00	2.00
- W/ FPD N-MSA	7,700.00	2.00
OC48		
- Basic N-MSA	11,000.00	3.00
- W/ FPD N-MSA	11,850.00	3.00

* Rates are applicable to all Rate Zones.

Service availability limited. Refer to # footnote on Page 8-5.

© 2022 Frontier Communications Parent, Inc. All rights reserved

8. SONET Switched Access Services (Cont'd)

8.2 Dedicated SONET Broadband Transport (DSBT)# (Cont'd)

(E) Rates and Charges (Cont'd)

(6) Switched Access Terminations (Cont'd)

(b) 3-Year*

Type	Recurring Rate	Nonrecurring Rate
OC3		
- Basic N-MSA	$2,200.00	$1.00
- W/ FPD N-MSA	3,400.00	1.00
OC12		
- Basic N-MSA	5,675.00	2.00
- W/ FPD N-MSA	6,300.00	2.00
OC48		
- Basic N-MSA	7,500.00	3.00
- W/ FPD N-MSA	8,295.00	3.00

* Rates are applicable to all Rate Zones.

Service availability limited. Refer to # footnote on Page 8-5.

© 2022 Frontier Communications Parent, Inc. All rights reserved

8. SONET Switched Access Services (Cont'd)

8.2 Dedicated SONET Broadband Transport (DSBT)# (Cont'd)

(E) Rates and Charges (Cont'd)

(6) Switched Access Terminations (Cont'd)

(c) 5-Year*

Type	Recurring Rate	Nonrecurring Rate
OC3		
- Basic N-MSA	$1,900.00	$1.00
- W/ FPD N-MSA	3,000.00	1.00
OC12		
- Basic N-MSA	4,600.00	2.00
- W/ FPD N-MSA	5,075.00	2.00
OC48		
- Basic N-MSA	6,350.00	3.00
- W/ FPD N-MSA	6,985.00	3.00

* Rates are applicable to all Rate Zones.

Service availability limited. Refer to # footnote on Page 8-5.

© 2022 Frontier Communications Parent, Inc. All rights reserved

8. SONET Switched Access Services (Cont'd)

8.2 Dedicated SONET Broadband Transport (DSBT) (Cont'd)

(E) Rates and Charges (Cont'd)

(7) Switched Access Ports

(a) Month-to-Month*

Type	Recurring Rate	Nonrecurring Rate
OC3		
- 2 Fiber N-MSA	$250.00	$1.00
- 4 Fiber 1+1 N-MSA	500.00	1.00
OC12		
- 2 Fiber N-MSA	625.00	2.00
- 4 Fiber 1+1 N-MSA	1,250.00	2.00
OC48		
- 2 Fiber N-MSA	1,050.00	3.00
- 4 Fiber 1+1 N-MSA	2,100.00	3.00

* Rates are applicable to all Rate Zones.

Service availability limited. Refer to # footnote on Page 8-5.

© 2022 Frontier Communications Parent, Inc. All rights reserved

8. SONET Switched Access Services (Cont'd)

8.2 Dedicated SONET Broadband Transport (DSBT) (Cont'd)

(E) Rates and Charges (Cont'd)

(7) Switched Access Ports (Cont'd)

(b) 3-Year*

Type	Recurring Rate	Nonrecurring Rate
OC3		
- 2 Fiber N-MSA	$200.00	$1.00
- 4 Fiber 1+1 N-MSA	400.00	1.00
OC12		
- 2 Fiber N-MSA	500.00	2.00
- 4 Fiber 1+1 N-MSA	1,000.00	2.00
OC48		
- 2 Fiber N-MSA	900.00	3.00
- 4 Fiber 1+1 N-MSA	1,800.00	3.00

Service availability limited. Refer to # footnote on Page 8-5.

© 2022 Frontier Communications Parent, Inc. All rights reserved

8. SONET Switched Access Services (Cont'd)

8.2 Dedicated SONET Broadband Transport (DSBT) (Cont'd)

(E) Rates and Charges (Cont'd)

(7) Switched Access Ports (Cont'd)

(c) 5-Year*

Type	Recurring Rate	Nonrecurring Rate
OC3		
- 2 Fiber N-MSA	$150.00	$1.00
- 4 Fiber 1+1 N-MSA	300.00	1.00
OC12		
- 2 Fiber N-MSA	400.00	2.00
- 4 Fiber 1+1 N-MSA	800.00	2.00
OC48		
- 2 Fiber N-MSA	600.00	3.00
- 4 Fiber 1+1 N-MSA	1,200.00	3.00

* Rates are applicable to all Rate Zones.

Service availability limited. Refer to # footnote on Page 8-5.

© 2022 Frontier Communications Parent, Inc. All rights reserved

8. SONET Switched Access Services (Cont'd)

8.2 Dedicated SONET Broadband Transport (DSBT) (Cont'd)

(E) Rates and Charges (Cont'd)

(8) Switched Access IOF Mileage

(a) Month-to-Month*

Type	Monthly Recurring Rate Fixed	Monthly Recurring Rate Per Mile
OC3 N-MSA	$2,500.00	$300.00
OC3 w/FPD N-MSA	2,500.00	375.00
OC12 N-MSA	6,100.00	575.00
OC12 w/FPD N-MSA	6,100.00	650.00
OC48 N-MSA	10,890.00	2,950.00
OC48 w/FPD N-MSA	10,890.00	3,250.00

* Rates are applicable to all Rate Zones.

Service availability limited. Refer to # footnote on Page 8-5.

© 2022 Frontier Communications Parent, Inc. All rights reserved

8. SONET Switched Access Services (Cont'd)

8.2 Dedicated SONET Broadband Transport (DSBT) (Cont'd)

(E) Rates and Charges (Cont'd)

(8) Switched Access IOF Mileage (Cont'd)

(b) 3-Year*

Type	Monthly Recurring Rate Fixed	Monthly Recurring Rate Per Mile
OC3 N-MSA	$2,200.00	$200.00
OC3 w/FPD N-MSA	2,200.00	250.00
OC12 N-MSA	5,130.00	425.00
OC12 w/FPD N-MSA	5,130.00	500.00
OC48 N-MSA	8,595.00	2,350.00
OC48 w/FPD N-MSA	8,595.00	2,600.00

* Rates are applicable to all Rate Zones.

Service availability limited. Refer to # footnote on Page 8-5.

© 2022 Frontier Communications Parent, Inc. All rights reserved

8. SONET Switched Access Services (Cont'd)

8.2 Dedicated SONET Broadband Transport (DSBT) (Cont'd)

(E) Rates and Charges (Cont'd)

(8) Switched Access IOF Mileage (Cont'd)

(c) 5-Year*

Type	Monthly Recurring Rate Fixed	Monthly Recurring Rate Per Mile
OC3 N-MSA	$1,800.00	$125.00
OC3 w/FPD N-MSA	1,800.00	150.00
OC12 N-MSA	3,590.00	300.00
OC12 w/FPD N-MSA	3,590.00	375.00
OC48 N-MSA	6,300.00	1,250.00
OC48 w/FPD N-MSA	6,300.00	1,380.00

* Rates are applicable to all Rate Zones.

Service availability limited. Refer to # footnote on Page 8-5.

© 2022 Frontier Communications Parent, Inc. All rights reserved

8. SONET Switched Access Services (Cont'd)

8.2 Dedicated SONET Broadband Transport (DSBT) (Cont'd)

(E) Rates and Charges (Cont'd)

(9) Switched Access Multiplexing Capability

(a) Per Arrangement*

Type	Recurring Rate	Nonrecurring Rate
OC3		
- Month-to-Month N-MSA	$ 2,228.00	$1,599.00
- 3-Year N-MSA	1,759.00	1,599.00
- 5-Year N-MSA	1,290.00	1,599.00
OC12		
- Month-to-Month N-MSA	3,943.00	1,599.00
- 3-Year N-MSA	3,091.00	1,599.00
- 5-Year N-MSA	2,238.00	1,599.00
OC48		
- Month-to-Month N-MSA	10,658.00	1,599.00
- 3-Year N-MSA	7,631.00	1,599.00
- 5-Year N-MSA	4,604.00	1,599.00

* Rates are applicable to all Rate Zones.

Service availability limited. Refer to # footnote on Page 8-5.

© 2022 Frontier Communications Parent, Inc. All rights reserved

8. SONET Switched Access Services (Cont'd)

8.2 Dedicated SONET Broadband Transport (DSBT) (Cont'd)

(E) Rates and Charges (Cont'd)

(9) Switched Access Multiplexing Capability (Cont'd)

(b) Low Speed Ports*
- Per Port

Type	Recurring Rate	Nonrecurring Rate
Month-to-Month		
DS1 Port N-MSA	$ 28.00	None
DS3 Port N-MSA	115.00	None
OC3 Port	Rates and Charges are set forth in (E)(6) preceding	
OC12 Port	Rates and Charges are set forth in (E)(6) preceding	

Type	Recurring Rate	Nonrecurring Rate
3-Year		
DS1 Port N-MSA	$ 28.00	None
DS3 Port N-MSA	115.00	None
OC3 Port	Rates and Charges are set forth in (E)(6) preceding	
OC12 Port	Rates and Charges are set forth in (E)(6) preceding	

* Rates are applicable to all Rate Zones.

Service availability limited. Refer to # footnote on Page 8-5.

© 2022 Frontier Communications Parent, Inc. All rights reserved

8. SONET Switched Access Services (Cont'd)

8.2 Dedicated SONET Broadband Transport (DSBT) (Cont'd)

(E) Rates and Charges (Cont'd)

(9) Switched Access Multiplexing Capability (Cont'd)

(b) Low Speed Ports* (Cont'd)
- Per Port

Type	Recurring Rate	Nonrecurring Rate
5-Year		
DS1 Port N-MSA	$ 28.00	None
DS3 Port N-MSA	115.00	None
OC3 Port	Rates and Charges are set forth in (E)(2) preceding	
OC12 Port	Rates and Charges are set forth in (E)(2) preceding	

(10) Service Rearrangements*

(a) Fiber Interface Rearrangement

	Nonrecurring Charge
2-Fiber to 4-Fiber or vice versa, per interface	$ 347.00

(b) Multiplexing Node Mapping Rearrangement

	Nonrecurring Charge
Per multiplexing node	$1,599.00

* Rates are applicable to all Rate Zones.

Service availability limited. Refer to # footnote on Page 8-5.

© 2022 Frontier Communications Parent, Inc. All rights reserved

8. SONET Special Access Services (Cont'd)

8.3 DSSSP Service

(A) General Description

DSSSP, Dedicated SONET Shared Single Path, is an STS1 (Synchronous Transport Signal Level 1) channel for the SONET transmission of 51.84 Mbps of data. The signal consists of overhead and a Synchronous Payload Envelope (SPE). The overhead portion of the signal is used for controlling, framing and maintaining the signal. The SPE contains the customer information.

DSSSP is provisioned over the Company's shared SONET network using an ADM operating in a ring mode and diversely routed fiber between the SWC and the customer's premises, or a Collocated Interconnection arrangement as described in Section 19.2 following. DSSSP channel service may be configured in a two point arrangement (i.e. both ends of the service are DSSSP channel terminations) or with a DSSSP channel termination connected to a DSEF termination or a DSSSP hubbed to an STS1/DS1 multiplexer.

DSSSP is provided with either an STS1 interface or a DS3 interface. The network channel interfaces define the bit rates that are available. Network Channel interfaces and codes are described below:

Interface	Codes
DS3	O4DS6.4
STS1	O4ST6.A

DSSSP service may be transported through IOF (Interoffice facilities) as STS1, STS1 with VT1.5 mapping or STS1 with DS3 mapping.

DSSSP services are provided where SONET facilities are available with sufficient bandwidth capacity to meet the customer's request.

(B) Optional Features and Functions

DSSSP service can be multiplexed. DS1s mapped as VT1.5 within a DSSSP can be multiplexed with the optional feature of STS1/DS1 multiplexing.

© 2022 Frontier Communications Parent, Inc. All rights reserved

8. SONET Special Access Services (Cont'd)

8.3 DSSSP Service (Cont'd)

(C) Terms and Conditions

(1) DSSSP is available month-to-month, or as a 3-year or 5-year term plan.

(2) The minimum service period for DSSSP is twelve months.

(3) Term Plan services and optional features must remain in service to the end of their commitment period(s) or termination liability will apply.

(4) Customers who order a DSSSP must specify how the signal is to be mapped, i.e., VT1.5 or DS3 mapped (see definitions for Virtual Tributary and SONET in Section 8.1(A) preceding).

(5) DSSSP channel terminations, channel mileage and optional features are subject to the guarantees set forth in Section 2.7.1(A)(2)(j) preceding for service interruptions.

(6) All connections of DSSSP service to a physical or virtual collocation arrangement must be a 2-fiber connection. Rates and charges for Collocated Interconnection Fiber Optic Cross-Connect Service and SPOT Bay Frame and Terminations are set forth in Sections 19.7.1 and 19.7.2 following.

Termination Liability

Reserved For Future Use. (C)

Termination liability does not apply for conversions to a longer term plan or changes.

Termination liability does not apply when the service is changed to a higher bandwidth SONET service with a commitment period that is equal or longer in length than the current term plan.

© 2024 Frontier Communications Parent, Inc. All rights reserved

8. SONET Special Access Services (Cont'd)

8.3 DSSSP Service (Cont'd)

Termination Liability (Cont'd)

Termination liability does not apply if the customer meets the requirements for portability which is defined as the replacement of a DSSSP rate element with a like rate element for the balance of the commitment period. Portability requirements are as follows:

(1) The replacement DSSSP rate element must not already be in a term plan.
(2) The orders to accomplish the replacement are placed with the Company at the same time with due dates which are within 90 days of each other, and are related by a related purchase order number.
(3) The service may be moved to another location in the same Company operating territory, provided that the service was maintained in the initial location for one year.
(4) The replacing DSSSP rate element is subject to all applicable nonrecurring charges and minimum period requirements.

Termination liability will not apply when the jurisdiction of DSSSP is changed from interstate to intrastate, provided that the following requirements are met.

- The intrastate DSSSP is provided from the Telephone Company's intrastate Access Service or general exchange service tariff or as an individual case based arrangement;
- the intrastate service is provided with a term commitment that is equal to, or longer than, the time remaining in the interstate commitment period;
- if the interstate service is provided with a service volume commitment, the number of services provided under the intrastate arrangement must be equal to, or greater than, the number of services provided under the interstate service tariff;
- the intrastate service is subject to revenue commitments, shortfall liability and/or early termination liability, as applicable; and
- the same customer locations are maintained with no changes to the operational characteristics of the service.

Except as set forth above, the customer must fulfill its term plan for the entire capacity, or be subject to termination liability for that portion of the capacity that was not in place for the entire term. Termination liability charges are in addition to any charges associated with the customer satisfying the minimum service requirement of one year on its DSSSP services.

Termination charges are calculated as follows:

- If the disconnect occurs during the first year of service, termination liability is calculated at 100% of the monthly charges for the unexpired portion of the first year, and at 15% of the monthly charges for the remainder of the term plan.

- If the disconnect occurs after the first year of service, termination liability is calculated at 15% of the monthly charges from the date of disconnection through the remainder of the term plan.

© 2022 Frontier Communications Parent, Inc. All rights reserved

8. SONET Special Access Services (Cont'd)

8.3 DSSSP Service (Cont'd)

(E) Rate Regulations

DSSSP service rate elements are channel termination and Channel Mileage.

The Channel Termination rate element provides for the communications path between a customer designated premises and the SWC (serving wire center) of that premises. Included, as part of the Channel Termination is a standard interface. DSSSP is provided with either a DS3 or STS1 interface.

The Channel Mileage provides transport between SWCs and through the IOF. The rates and charges for DSSSP include channel mileage, which consist of a Fixed rate and a rate Per Mile. The manner in which the Channel Mileage rate element is measured and applied is in accordance with the regulations set forth in Section 7.4.6 preceding for Special Access Service mileage measurement.

The STS1/DS1 Multiplexing rate element applies when the optional feature of DSSSP to DS1 Multiplexing is ordered.

The rates and charges for any other Special Access basic or SONET service connected to DSSSP are subject to the rates and charges for the specific service being provided.

Nonrecurring charges apply for the installation of each Channel Termination and for the installation of STS1/DS1 Multiplexing.

© 2022 Frontier Communications Parent, Inc. All rights reserved

8. SONET Special Access Services (Cont'd)

8.3 DSSSP Service (Cont'd)

(F) Rates and Charges

(A) Channel Termination
-Per point of termination

	Monthly Rates	Nonrecurring Charges	
		First	Additional
DSSSP w/ STS1 Interface			
Month-to-Month			
Price Cap#	$3,000.00	$1.00	$0.75
Price Band 4	3,000.00	1.00	0.75
Price Band 5	3,000.00	1.00	0.75
Price Band 6	3,000.00	1.00	0.75
3-year Term			
Price Cap#	2,600.00	1.00	0.75
Price Band 4	2,600.00	1.00	0.75
Price Band 5	2,600.00	1.00	0.75
Price Band 6	2,600.00	1.00	0.75
5-year Term			
Price Cap#	1,700.00	1.00	0.75
Price Band 4	1,700.00	1.00	0.75
Price Band 5	1,700.00	1.00	0.75
Price Band 6	1,700.00	1.00	0.75
DSSSP w/ DS3 Interface			
Month-to-Month			
Price Cap#	3,000.00	1.00	0.75
Price Band 4	3,000.00	1.00	0.75
Price Band 5	3,000.00	1.00	0.75
Price Band 6	3,000.00	1.00	0.75
3-year Term			
Price Cap#	2,600.00	1.00	0.75
Price Band 4	2,600.00	1.00	0.75
Price Band 5	2,600.00	1.00	0.75
Price Band 6	2,600.00	1.00	0.75
5-year Term			
Price Cap#	1,700.00	1.00	0.75
Price Band 4	1,700.00	1.00	0.75
Price Band 5	1,700.00	1.00	0.75
Price Band 6	1,700.00	1.00	0.75

#Price Cap regulations no longer apply to DSSSP service; however, the Telephone Company will continue to display these rates.

© 2022 Frontier Communications Parent, Inc. All rights reserved

9. RESERVED FOR FUTURE USE

© 2022 Frontier Communications Parent, Inc. All rights reserved

ACCESS SERVICE

10. RESERVED FOR FUTURE USE

© 2022 Frontier Communications Parent, Inc. All rights reserved

11. Special Facilities Routing of Access Services

11.1 Description of Special Facilities Routing of Access Services

The services provided under this Guide are provided over such routes and facilities as the Telephone Company may elect. Special Facilities Routing is involved when, in order to comply with requirements specified by the customer, the Telephone Company provides Switched Access Service, Special Access Service or Special Federal Government Access Service in a manner which includes one or more of the following conditions:

11.1.1 Diversity

Two or more services must be provided over not more than two different physical routes.

11.1.2 Avoidance

A service must be provided on a route which avoids specified geographical locations.

11.1.3 Cable-Only Facilities

Certain Voice Grade services are provided on Cable-Only Facilities to meet the particular needs of a customer.

Service is provided subject to the availability of Cable-Only facilities. In the event of a service failure, restoration will be made through the use of any available facilities as selected by the Telephone Company.

In order to avoid the compromise of special routing information, the Telephone Company will provide the required routing information for each specially routed service to only the ordering customer. If requested by the customer, this information will be provided when service is installed and prior to any subsequent changes in routing.

The offering of Special Facilities Routing of Access Services contemplates the use of existing facilities. Should facilities not be available, it may be necessary to construct such facilities, either as (1) normal or (2) Special Construction. If Special Construction is involved, the regulations, as set in the appropriate Special Construction tariff as identified in Section 1.5 will apply. However, the applicable rates and charges shall be filed in this section of this Guide, not the Special Construction tariff. In either case of (1) or (2) preceding, the rates and charges for any specific items of cost directly attributable to the provision of this service shall be filed in this section.

The rates and charges for Special Facilities Routing of Access Services as set forth in 11.2 following are in addition to all other rates and charges that may be applicable for services provided under other sections of this Guide.

© 2022 Frontier Communications Parent, Inc. All rights reserved

11. Special Facilities Routing of Access Services (Cont'd)

11.2 Rates and Charges for Special Facilities Routing of Access Service

The rates and charges for Special Facilities Routing of Access Services are as follows:

11.2.1 Diversity

For each service provided in accordance with 11.1.1 preceding.

	Monthly Rate
Administration - per circuit	$ 5.00
	Rates and Charges
Special Facilities - Other	ICB rates and charges apply

11.2.2 Avoidance

For each service provided in accordance with 11.1.2 preceding.

	Rates and Charges
Special Facilities	ICB rates and charges apply

11.2.3 Diversity and Avoidance Combined

For each service provided in accordance with 11.1.1 and 11.1.2 preceding, combined.

	Monthly Rate
Administration - per circuit	$5.00
	Rates and Charges
Special Facilities - Other	ICB rates and charges apply

ICB Rates and charges are filed in 11.2.5 following.

© 2022 Frontier Communications Parent, Inc. All rights reserved

11. Special Facilities Routing of Access Services (Cont'd)

11.2 Rates and Charges for Special Facilities Routing of Access Service (Cont'd)

11.2.4 Cable-Only Facilities

For each service provided in accordance with 11.1.3 preceding.

	Rates and Charges
Special Facilities	ICB rates and charges apply

11.2.5 Individual Case Filings

Rates and charges for Special Facilities Routing of Access Service provided on an individual case basis are filed following:

© 2022 Frontier Communications Parent, Inc. All rights reserved

12. Specialized Service or Arrangements

12.1 General

Specialized Service or Arrangements may be provided by the Telephone Company, at the request of a customer, on an individual case basis if such service or arrangements meet the following criteria.

(A) The requested service or arrangements are not offered under other sections of this Guide.

(B) The facilities utilized to provided the requested service or arrangements are of a type normally used by the Telephone Company in furnishing its other services.

(C) The requested service or arrangements are provided within a LATA.

The requested service or arrangements are compatible with other Telephone Company services, facilities, and its engineering and maintenance practices.

(E) This offering is subject to the availability of the necessary Telephone Company personnel and capital resources.

12.2 Move Charges

(A) When service without a maximum termination liability charge associated with it is moved to a different building, the nonrecurring charge applies; when moved to a new location in the same building, a charge of one-half the nonrecurring charge applies.

(B) When service with a maximum termination liability charge associated with it is moved and is reinstalled at a new location, the customer may elect:

- to pay the unexpired portion of the maximum termination liability charge for the service, if any, with the application of a nonrecurring charge and the establishment of a new maximum termination liability charge for such service at the new location, or

- to continue service subject to the unexpired portion of the maximum termination liability charge, if any, and pay the estimated costs of moving such service, provided that the customer requests these charges be quoted prior to ordering the service move. Charges for moving such service will be based on estimated costs attributable to the move.

Move charges include the estimated costs of removal, restoration of services or facilities necessitated by the move, transportation, storage, reinstallation, engineering, labor, supervision, materials, administration, and any other specific items of cost directly attributable to the move.

© 2022 Frontier Communications Parent, Inc. All rights reserved

12. Specialized Service or Arrangements (Cont'd)

12.3 Rates and Charges

Rates and charges and additional regulations if applicable, for specialized service or arrangements provided on an Individual Case Basis are filed following:

© 2022 Frontier Communications Parent, Inc. All rights reserved

13. Additional Engineering, Additional Labor and Miscellaneous Services

In this section normally scheduled working hours are the Telephone Company's normal business hours, 8 AM to 5 PM, Monday through Friday. Any work occurring outside of these hours, Monday through Friday, will be charged at "Overtime Rates." Any work occurring on Saturday, Sunday, or Holidays will be charged at "Premium Rates."

13.1 Additional Engineering

Additional Engineering will be provided by the Telephone Company at the request of the customer only when:

(A) A customer requests additional technical information after the Telephone Company has already provided the technical information normally included on the Design Layout Report (DLR) as set forth in 6.1.4 and 7.1.6 preceding.

(B) Additional engineering time is incurred by the Telephone Company to engineer a customer's request for a customized service as set forth in 7.2 preceding.

The Telephone Company will notify the customer that additional engineering charges, as set forth in 13.1.1 following, will apply before any additional engineering is undertaken.

13.1.1 Charges for Additional Engineering

The charges for additional engineering are as follows:

Additional Engineering Periods	First Half Hour or Fraction Thereof	Each Additional Half Hour or Fraction Thereof	
(A) Basic Time, normally scheduled working hours, per engineer			
Special Access Service, per engineer			
Price Cap	$150.00	$150.00	(C)
Price Bands 4, 5 and 6	$150.00	$150.00	(C)
All other services, per engineer	$150.00	$150.00	(C)
(B) Overtime, outside of normally scheduled working hours, per engineer			
Special Access Service, per engineer			
Price Cap	$200.00	$200.00	(C)
Price Bands 4, 5 and 6	$200.00	$200.00	(C)
All other services, per engineer	$200.00	$200.00	(C)

© 2022 Frontier Communications Parent, Inc. All rights reserved

13. Additional Engineering, Additional Labor and Miscellaneous Services (Cont'd)

13.2 Additional Labor

Additional labor is that labor requested by the customer on a given service and agreed to by the Telephone Company as set forth in 13.2.1 through 13.2.5 following. The Telephone Company will notify the customer that additional labor charges as set forth in 13.2.6 following will apply before any additional labor is undertaken. Charges for additional labor will apply per order submitted.

For part-time Video Services, additional labor may also include that labor, requested by one or more customers and agreed upon by the Telephone Company, for a Telephone Company technician to oversee the operation of part-time Video Service during a specific event. The Telephone Company will notify the customer(s) that additional labor set forth in 13.2.3 following for Stand By Labor will apply. The charge for Stand By Labor will apply per customer. When a single Telephone Company technician oversees the operation of part-time Video Service(s) for more than one customer, the total charge to perform Stand By Labor will be divided equally between the customers involved.

13.2.1 Overtime Installation

Overtime installation is that Telephone Company installation effort outside of normally scheduled working hours.

13.2.2 Overtime Repair

Overtime repair is that Telephone Company maintenance effort performed outside of normally scheduled working hours.

Charges will not apply when the trouble is determined to be in the Telephone Company facilities or equipment. If no trouble is found the additional labor charges will apply only if additional labor is involved

When a dispatch is made to the customer's premises and a trouble is identified which is not the Telephone Company's responsibility, only the charges specified in 13.2.6 following will apply.

13.2.3 Stand By

Stand By includes all time in excess of one-half (1/2) hour during which Telephone Company personnel stand by to make cooperative tests with a customer to verify facility repair on a given service. For Part Time Video Services, Stand By Labor also includes requests by the customer for a Telephone Company technician to oversee the operation of part-time Video Service during a specific event. For part-time Video Service, the request for Stand By Labor may involve one or more customers for a single event. The charge for Stand By Labor to each customer shall be as specified in 13.2.6 following.

© 2022 Frontier Communications Parent, Inc. All rights reserved

13. Additional Engineering, Additional Labor and Miscellaneous Services (Cont'd)

13.2 Additional Labor

13.2.4 Testing and Maintenance with Other Telephone Companies

Additional testing, maintenance or repair of facilities which connect to facilities of other telephone companies, which is in addition to normal effort required to test, maintain or repair facilities provided solely by the Telephone Company.

13.2.5 Other Labor

Other labor is that additional labor not included in 13.2.1 through 13.2.4 preceding and labor incurred to accommodate a specific customer request that involves only labor which is not covered by any other section of this Guide.

13.2.6 Charges for Additional Labor

The charges for additional labor are as follows:

Additional Labor Periods*	First Half Hour or Fraction Thereof	Each Additional Half Hour or Fraction Thereof	
(A) Installation or Repair			
- Overtime, outside of normally scheduled working hours on a scheduled work day, per technician			
Special Access Service, per technician			(C)
Price Cap	$200.00	$200.00	(C)
Price Bands 4, 5 and 6	$200.00	$200.00	(C)
All other services, per technician	$200.00	$200.00	
- Premium Time, outside of scheduled work day, per technician			
Special Access Service, per technician			(C)
Price Cap	$250.00	$250.00	(C)
Price Bands 4, 5 and 6	$250.00	$250.00	(C)
All other services, per technician	$250.00	$250.00	

* A call-out of a Telephone Company employee at a time not consecutive with the employee's scheduled work period is subject to a minimum charge of four hours.

© 2022 Frontier Communications Parent, Inc. All rights reserved

13. Additional Engineering, Additional Labor and Miscellaneous Services (Cont'd)

13.2 Additional Labor (Cont'd)

13.2.6 Charges for Additional Labor (Cont'd)

The charges for additional labor are as follows:

Additional Labor Periods*	First Half Hour or Fraction Thereof	Each Additional Half Hour or Fraction Thereof	
(B) Stand by			
- Basic Time, normally scheduled working hours,			
Special Access Service, per technician			(C)
Price Cap	None	$60.00	
Price Bands 4, 5 and 6	None	$60.00	
All other services, per technician	None	$60.00	(C)
- Overtime, outside of normally scheduled working hours on a scheduled work day,			
Special Access Service, per technician			(C)
Price Cap	None	$70.00	
Price Bands 4, 5 and 6	None	$70.00	
All other services, per technician	None	$70.00	(C)
- Premium time, outside of scheduled work day,			
Special Access Service, per technician			(C)
Price Cap	None	$80.00	
Price Bands 4, 5 and 6	None	$80.00	
All other services, per technician	None	$80.00	(C)

* A call-out of a Telephone Company employee at a time not consecutive with the employee's scheduled work period is subject to a minimum charge of four hours.

© 2022 Frontier Communications Parent, Inc. All rights reserved

13. Additional Engineering, Additional Labor and Miscellaneous Services (Cont'd)

13.2 Additional Labor (Cont'd)

13.2.6 Charges for Additional Labor (Cont'd)

The charges for additional labor are as follows:

Additional Labor Periods*	First Half Hour or Fraction Thereof	Each Additional Half Hour or Fraction Thereof	
(C) Testing and Maintenance with other telephone companies, or Other Labor			
- Basic Time, normally scheduled working hours, per technician			(C)
Special Access Service, per technician			
Price Cap	$150.00	$150.00	
Price Bands 4, 5 and 6	$150.00	$150.00	
All other services, per technician	$150.00	$150.00	(C)
- Overtime, outside of normally scheduled working hours on a scheduled work day, per technician			(C)
Special Access Service, per technician			
Price Cap	$200.00	$200.00	
Price Bands 4, 5 and 6	$200.00	$200.00	
All other services, per technician	$200.00	$200.00	(C)
- Premium time, outside of scheduled work day, per technician			(C)
Special Access Service, per technician			
Price Cap	$250.00	$250.00	
Price Bands 4, 5 and 6	$250.00	$250.00	
All other services, per technician	$250.00	$250.00	(C)

* A call-out of a Telephone Company employee at a time not consecutive with the employee's scheduled work period is subject to a minimum charge of four hours.

© 2022 Frontier Communications Parent, Inc. All rights reserved

13. Additional Engineering, Additional Labor and Miscellaneous Services (Cont'd)

13.3 Miscellaneous Services

13.3.1 Reserved for Future Use

13.3.2 Reserved for Future Use

13.3.3 Reserved for Future Use

13.3.4 Testing Services

Testing Services offered under this section of the tariff are optional and subject to rates and charges as set forth in 13.3.4(C) following. Other testing services provided by the Telephone Company in association with Access Services are furnished at no additional charge. These other testing services are described in 7.1.7 preceding.

Testing services are normally provided by Telephone Company personnel at Telephone Company locations. However, provisions are made in (B)(1) and (2) following for a customer to request Telephone Company personnel to perform testing services at the customer's premises.

The offering of Testing Services under this section of the tariff is made subject to the availability of the necessary qualified personnel and test equipment at the various test locations mentioned in (B) and (C) following:

(A) Reserved

(B) Special Access Service

The Telephone Company will, at the request of a customer, provide assistance in performing specific tests requested by the customer.

(1) Additional Cooperative Acceptance Testing (ACAT)

When a customer provides a technician at its premises or at an end user's premises, with suitable test equipment to perform the requested tests, the Telephone Company will provide a technician at its office for the purpose of conducting Additional Cooperative Acceptance Testing of voice grade services. At the customer's request, the Telephone Company will provide a technician at the customer's premises or at the end user premises. These tests may, e.g., consist of the following:

- Attenuation Distortion (i.e., frequency response)
- Intermodulation Distortion (i.e., harmonic distortion)
- Phase Jitter
- Impulse Noise
- Envelope Delay Distortion
- Echo Control
- Frequency Shift

© 2022 Frontier Communications Parent, Inc. All rights reserved

13. Additional Engineering, Additional Labor and Miscellaneous Services (Cont'd)

13.3 Miscellaneous Services (Cont'd)

13.3.4 Testing Services (Cont'd)

(B) Special Access Service (Cont'd)

(2) Nonscheduled Testing (NST)

When a customer provides a technician at its premises, with suitable test equipment to perform the required tests, the Telephone Company will provide a technician at its office for the purpose of conducting Nonscheduled Testing. At the customer's request, the Telephone Company will provide a technician at the customer's premises. Nonscheduled tests may consist of any tests, e.g., loss, noise, slope, envelope delay, which the customer may require.

(3) Obligation of the Customer

When the customer subscribes to Testing Service as set forth in this section, the customer shall make the facilities to be tested available to the Telephone Company at times mutually agreed upon.

© 2022 Frontier Communications Parent, Inc. All rights reserved

13. Additional Engineering, Additional Labor and Miscellaneous Services (Cont'd)

13.3 Miscellaneous Services (Cont'd)

13.3.4 Testing Services (Cont'd)

(C) Rates and Charges

(1) Special Access

(a) Additional Cooperative Acceptance Testing (ACAT)

Testing Periods	First Half Hour or Fraction Thereof	Each Additional Half Hour or Fraction Thereof
Basic Time, normally scheduled working hours, per technician		
Price Cap	$150.00	$150.00
Price Bands 4, 5 and 6	$150.00	$150.00
Overtime, outside of normally scheduled working hours on a scheduled work day, per technician		
Price Cap	$200.00	$200.00
Price Bands 4, 5 and 6	$200.00	$200.00
Premium Time, outside of scheduled work day, per technician		
Price Cap	$250.00	$250.00
Price Bands 4, 5 and 6	$250.00	$250.00

* A call-out of a Telephone Company employee at a time not consecutive with the employee's scheduled work period is subject to a minimum charge of four hours.

© 2022 Frontier Communications Parent, Inc. All rights reserved

13. Additional Engineering, Additional Labor and Miscellaneous Services (Cont'd)

13.3 Miscellaneous Services (Cont'd)

13.3.4 Testing Services (Cont'd)

(C) Rates and Charges (Cont'd)

(1) Special Access (Cont'd)

(b) Nonscheduled Testing (NST)

Testing Periods	First Half Hour or Fraction Thereof	Each Additional Half Hour or Fraction Thereof
Basic Time, normally scheduled working hours, - per technician		
Price Cap	$150.00	$150.00
Price Bands 4, 5 and 6	$150.00	$150.00
Overtime, outside of normally scheduled working hours on a scheduled work day, per technician		
Price Cap	$200.00	$200.00
Price Bands 4, 5 and 6	$200.00	$200.00
Premium Time, outside of scheduled work day, per technician		
Price Cap	$250.00	$250.00
Price Bands 4, 5 and 6	$250.00	$250.00

* A call-out of a Telephone Company employee at a time not consecutive with the employee's scheduled work period is subject to a minimum charge of four hours.

© 2022 Frontier Communications Parent, Inc. All rights reserved

13. Additional Engineering, Additional Labor and Miscellaneous Services (Cont'd)

13.3 Miscellaneous Services (Cont'd)

13.3.5 RESERVED

© 2022 Frontier Communications Parent, Inc. All rights reserved

13. Additional Engineering, Additional Labor and Miscellaneous Services (Cont'd)

13.3 Miscellaneous Services (Cont'd)

13.3.6 Provision of Access Service Billing Information

(A) The customer, upon request, has the option of receiving its primary monthly access bill and Customer Service Record (CSR) in one of the following standard medium, at no charge:

(1) Paper
(a) Detailed paper bill

(2) Bill Data Record
(a) Magnetic Tape
(b) Electronic Data Transmission
(c) CD ROM

(B) In addition to the customer's primary monthly access bill, the customer will be provided, upon request, an abbreviated paper bill, at no additional charge.

(C) At the option of the customer, and for an additional charge as set forth in 13.3.6(H) following:

(1) Additional hard copies of the monthly access bill or service and features record may be provided on paper.

(2) Additional Bill Data Record information may be provided on magnetic tape.

(3) Additional Bill Data Record information may be transmitted to the customer premises by electronic data transmission.

(4) Additional Bill Data Record information may be provided on CD ROM.

The rules and regulations concerning payment arrangements and credit allowances described in Section 2.4 preceding applies to all primary monthly access bills, regardless of the chosen bill medium.

© 2022 Frontier Communications Parent, Inc. All rights reserved

13. Additional Engineering, Additional Labor and Miscellaneous Services (Cont'd)

13.3 Miscellaneous Services (Cont'd)

13.3.6 Provision of Access Service Billing Information (Cont'd)

(E) Upon acceptance by the Telephone Company of a request for a change in the existing medium of the primary monthly access bill data (e.g., paper to magnetic tape, magnetic tape to paper, or any of the previous two to electronic data transmission or CD ROM), and for an additional electronic data transmission, the Telephone Company, in cooperation with the customer, will determine the interval required to implement the transmission of such material on an individual request basis.

The customer requesting electronic data transmission shall be responsible for providing a data transmission system compatible with the Telephone Company transmission facilities.

(F) Regulations regarding electronic data transmission failure will apply as follows:

(1) In the event of transmission failure resulting from Telephone Company error, the Telephone Company will re-send a bill by electronic data transmission at no charge to the customer. The bill payment due date will be negotiated between Telephone Company and customer for this bill.

(2) In the event of transmission failure resulting from failure of the customer's transmission line or other customer error, the Telephone Company will re-send a bill by electronic data transmission at the same rates and charges as a request for an additional copy of the access bill as set forth in 13.3.6(H) following.

(3) In the event that there are problems or disputes regarding receipt of the data transmission other than those outlined in (1) and (2) preceding, the Telephone Company will forward a duplicate access bill on magnetic tape via overnight delivery. After investigation, if (2) preceding applies, the same rates and charges as a request for an additional copy of the access bill will apply as set forth in 13.3.6(H) following.

(G) This service may not be available for non-access rates and charges.

© 2022 Frontier Communications Parent, Inc. All rights reserved

13. Additional Engineering, Additional Labor and Miscellaneous Services (Cont'd)

13.3 Miscellaneous Services (Cont'd)

13.3.6 Provision of Access Service Billing Information (Cont'd)

(H) The rates and charges for the provision of Access Service Billing Information are as follows:

	Rates
(1) Additional hard copies of the customer's monthly bill or service and features record on paper,	
per page	$0.0599
(2) Additional copies of Bill Data Record information in magnetic tape format,	
per record*	$0.0076
(3) Additional Electronic Data Transmission to a customer's premises of Bill Data Record information,	
per record* transmitted	$0.0080
(4) Additional copies of Bill Data Record information on CD ROM,	
per CD	$25.47

© 2022 Frontier Communications Parent, Inc. All rights reserved

14. Operating Territory of the Frontier Telephone Companies

The operating territory of the Frontier Telephone Companies is comprised of the operating territory of Frontier West Virginia Inc. and Frontier of Virginia, Inc. as defined following.

14.1 Rate Centers

14.1.1 State of West Virginia

The operating territory of Frontier West Virginia, Inc. is comprised of the following locations defined by the names of rate centers.

Alderson
Alloy
Ansted
Apple Grove
Beckley
Beech Bottom
Belington
Berkeley Springs
Bethany
Bradshaw
Brandywine
Bridgeport
Brushton
Buckhannon
Burnsville
Chapmanville
Charleston Zone I
Charleston Zone II
Charleston Zone III
Charleston Zone IV
Charleston Zone V
Charleston Zone VI
Charleston Zone VII
Cheat Lake
Chester
Clarksburg
Clendenin
Craigsville

Delbarton
Dutch Ridge
East Bank
Elizabeth
Elk Garden
Elkins

Fairview
Falling Waters
Fayetteville
Flat Top
Grafton
Hurricane
Kermit
Leon

Fairmont
Logan
Lumberport
Farmington
Madison
Man
Follansbee
Fort Gay
Franklin

Gassaway
Gauley Bridge
Gilbert
Glen Daniel
Glenville
Gormania
Mullens
Greenville
Griffithsville

Hedgesville
Helen
Hinton
Huntington Zone I
Huntington Zone II
Huntington Zone IV
Parkersburg Zone I

Iaeger
Inwood
Peterstown
Jane Lew

Pineville
Keyser
Kingwood

Rainelle

Lewisburg

Mannington
Martinsburg
Mason
Matewan
Meadow Bridge
Middlebourne
Milton
Montgomery
Morgantown
Mount Hope

New Cumberland
New Martinsville
Newburg

Oak Hill
Oceana

Paden City

Parkersburg Zone II
Parkersburg Zone III
Pennsboro

Philippi
Piedmont

Point Pleasant
Prichard

© 2022 Frontier Communications Parent, Inc. All rights reserved

14. Operating Territory of the Frontier Telephone Companies (Cont'd)

14.1 Rate Centers (Cont'd)

14.1.1 State of West Virginia (Cont'd)

Ravenswood
Richwood
Ridgeley
Ripley Union
Rivesville
Rock Cave
Rowlesburg
Van
Salem Walton
Scott Depot
Seth Wellsburg
Shinnston
Sistersville
Sophia Weston
Spencer
Summersville
Sutton
Terra Alta
Tunnelton

Wheeling Zone V
Union Ridge

Valley Mills
Williamson
Williamstown
Weirton

West Milford
West Union

Wharton
Wheeling Zone I
Wheeling Zone II
Wheeling Zone III

White Sulphur Spgs
Whitesville
Widen

Winfield

14.1.2 State of Virginia

The operating territory of Frontier of Virginia, Inc. is comprised of the following locations defined by the names of rate centers.

Crows-Hematite

© 2022 Frontier Communications Parent, Inc. All rights reserved

14. Operating Territory of the Frontier Telephone Companies (Cont'd)

14.2 RESERVED

© 2022 Frontier Communications Parent, Inc. All rights reserved

14. Operating Territory of the Frontier Telephone Companies (Cont'd)

14.2 RESERVED

© 2022 Frontier Communications Parent, Inc. All rights reserved

14. Operating Territory of the Frontier Telephone Companies (Cont'd)

14.2 RESERVED

© 2022 Frontier Communications Parent, Inc. All rights reserved

14. Operating Territory of the Frontier Telephone Companies (Cont'd)

14.2 RESERVED

© 2022 Frontier Communications Parent, Inc. All rights reserved

14. Operating Territory of the Frontier Telephone Companies (Cont'd)

14.3 RESERVED

© 2022 Frontier Communications Parent, Inc. All rights reserved

14. Operating Territory of the Frontier Telephone Companies (Cont'd)

14.3 RESERVED

© 2022 Frontier Communications Parent, Inc. All rights reserved

14. Operating Territory of the Frontier Telephone Companies (Cont'd)

14.3 RESERVED (Cont'd)

© 2022 Frontier Communications Parent, Inc. All rights reserved

14. Operating Territory of the Frontier Telephone Companies (Cont'd)

14.3 RESERVED (Cont'd)

© 2022 Frontier Communications Parent, Inc. All rights reserved

14. Operating Territory of the Frontier Telephone Companies (Cont'd)

14.3 RESERVED (Cont'd)

© 2022 Frontier Communications Parent, Inc. All rights reserved

14. Operating Territory of the Frontier Telephone Companies (Cont'd)

14.3 RESERVED (Cont'd)

© 2022 Frontier Communications Parent, Inc. All rights reserved

14. Operating Territory of the Frontier Telephone Companies (Cont'd)

14.3 RESERVED (Cont'd)

© 2022 Frontier Communications Parent, Inc. All rights reserved

14. Operating Territory of the Frontier Telephone Companies (Cont'd)

14.4 Competitive and Non-Competitive Counties

(A) General

Counties and county-equivalents within the Telephone Company's operating territories are either Competitive or Non-Competitive for the purpose of pricing Special Access Services. The effect of the Competitive and Non-Competitive designations are described in section 7.4.1 preceding. Areas not listed as Competitive are deemed Non-Competitive for Special Access Services and are not covered by the Special Access provisions of this Guide.

(1) Competitive Pricing

The rate elements associated with the transmission path are those rate elements applicable for the type of service involved. Rates and charges for competitive rate elements are shown in terms of price bands, regardless of the status of the county for a particular wire center. To determine the price band for a rate element, first locate the county and the wire center from which the service is provided in section 14.4 (C) following and find the corresponding price band.

© 2022 Frontier Communications Parent, Inc. All rights reserved

14. Operating Territory of the Frontier Telephone Companies (Cont'd)

14.4 Competitive and Non-Competitive Counties (Cont'd)

(A) General (Cont'd)

The Special Access Services which are subject to price bands are as follows:

- Bonded Digital Link Service
- Channel Extension Service
- Digital Data Service (DDS)
- Facilities Management Service (FMS)
- High Capacity DS1 and DS3
- Dedicated SONET Broadband Transport (DSBT)
- Dedicated SONET Entrance Facilities (DSEF)
- Dedicated SONET Optical Transport Service (DSOTS)
- Dedicated SONET Shared Dual Path (DSSDP)
- Dedicated SONET Shared Assurance Network (DSSAN)
- Dedicated SONET Shared Single Path (DSSSP)
- Reconfigure Service
- Internet Protocol Routing Service (IPRS)
- LAN Extension Service
- Lightwave
- Metallic
- Non-Standard Premises Connection Charge
- Program Audio
- Telecommunications Service Priority System (TSP)
- Telegraph
- Dedicated SONET Ring (DSR)
- Ethernet Private Line
- Video
- Voice Grade
- WATS Access Line
- Wideband Data

The Packet Services which are subject to price bands are as follows:

- Exchange Access Frame Relay Service
- Exchange Access Asynchronous Transfer Mode Cell Relay Service
- ATM Cell Relay Service
- Ethernet LAN Service

© 2022 Frontier Communications Parent, Inc. All rights reserved

14. Operating Territory of the Frontier Telephone Companies (Cont'd)

14.4 Competitive and Non-Competitive Counties (Cont'd)

(B) Rate Regulation

To determine the price band for the channel mileage rate element when the wire centers involved are located within different price bands, apply the rates and charges for the higher price band number.

For the avoidance of doubt, in accordance with Section 2.4.7 of this Guide, only Telephone Company wire centers in the operating territory of this Guide will be considered in order to determine the price band of the applicable channel mileage rate elements. If one wire center is in the operating territory of this Guide and the other wire center is not, the rates and charges applicable to the channel mileage rate element will be determined by the band that applies based on the wire center that is in the Telephone Company's operating territory.

When service is provided under a Term Pricing Plan with a Commitment Discount as set forth in Sections 7.4.13(A) and (B) preceding, the discount percentage shall be applied to the rate applicable to the price band involved.

When service is provided as part of a Shared Use Arrangement, price band billing may apply to both, the switched access and the special access, portions of the facility. Price band billing regulations for special access are specified in this Section 14.4, while price band billing regulations for switched access are found in Section 14.3 preceding.

The application of rates and charges for Special Access service subject to Competitive and Non-Competitive Counties pricing relief are described in Section 7.4.1 preceding.

Section 69.801 of the FCC's rules defines a "Grandfathered market" as "[a] county that does not satisfy the competitive market test set forth in § 69.803 for which a price cap local exchange carrier obtained Phase II relief pursuant to § 69.711(c)." Pursuant to Section 69.807(c) of the FCC's rules, for the CLLI Codes in grandfathered markets, a new rate element "Grandfathered Market" has been created for the Nonrecurring charge (NRC) under section 24. "Grandfathered Market" rate will be applicable for such Nonrecurring charges (NRC). The Grandfathered Market status has no bearing on the applicable monthly rate. If a Grandfathered Market is not specified for a NRC the Price Cap NRC rate shall apply.

© 2022 Frontier Communications Parent, Inc. All rights reserved

14. Operating Territory of the Frontier Telephone Companies (Cont'd)

14.4 Competitive and Non-Competitive Counties (Cont'd)

(C) Counties

(1) West Virginia

County	Status	SWC CLLI	Price Band
Kanawha	Competitive	ALCKWVAK	6
Greenbrier	Competitive	ALDRWVAD	6
Fayette	Competitive	ALLYWVAL	6
Fayette	Competitive	ANSTWVAN	6
Mason	Competitive	APGVWVAP	6
Cabell	Competitive	BAVLWVPE	6
Upshur	Competitive	BCKHWVFL	6
Raleigh	Competitive	BCKLWVWD	5
Putnam	Competitive	BFLOWVBL	6
Brooke	Non-Competitive	BHBTWVBE	6
Kanawha	Competitive	BLLEWVRV	6
Barbour	Non-Competitive	BLTNWVBB	6
McDowell	Non-Competitive	BRDSWVBK	6
Pendleton	Competitive	BRNDWVBY	6
Harrison	Competitive	BRPTWVPH	6
Morgan	Non-Competitive	BRSPWVWA	6
Braxton	Competitive	BRVLWVBV	6
Brooke	Non-Competitive	BTHNWVBH	6
Hancock	Non-Competitive	CHESWVCW	6
Monongalia	Competitive	CHLKWVCL	6
Kanawha	Competitive	CHTNWVLE	4
Logan	Non-Competitive	CHVLWVCL	6
Harrison	Competitive	CLBGWVMA	5
Kanawha	Competitive	CLNDWVPC	6
Nicholas	Competitive	CRVIWVCG	6
Wood	Competitive	DLSNWVDS	6
Mingo	Non-Competitive	DLTNWVGR	6
Kanawha	Competitive	DUNBWVDN	6
Kanawha	Competitive	EBNKWVPY	6

© 2022 Frontier Communications Parent, Inc. All rights reserved

14. Operating Territory of the Frontier Telephone Companies (Cont'd)

14.4 Competitive and Non-Competitive Counties (Cont'd)

(C) Counties (Cont'd)

(1) West Virginia (Cont'd)

County	Status	SWC CLLI	Price Band
Randolph	Competitive	EKNSWVDV	6
Kanawha	Competitive	EKVWWVEV	6
Wirt	Competitive	ELZBWVCT	6
Marion	Competitive	FAMTWVMN	6
Pendleton	Competitive	FKLNWVFH	6
Brooke	Non-Competitive	FLNSWVLL	6
Mercer	Competitive	FLTPWVFT	6
Berkeley	Competitive	FLWTWVFW	6
Marion	Competitive	FRTNWVRR	6
Marion	Competitive	FRVWWVMI	6
Wayne	Competitive	FTGYWVFC*	6
Fayette	Competitive	FYVLWVMP	6
Taylor	Non-Competitive	GFTNWVBC	6
Mingo	Non-Competitive	GLBRWVVN	6
Raleigh	Competitive	GLDNWVGD	6
Gilmer	Competitive	GLVLWVHR	6
Taylor	Non-Competitive	GMSPWVGS	6
Monroe	Competitive	GNVLWVGV	6
Grant	Non-Competitive	GRMNWVGM	6
Lincoln	Non-Competitive	GRVLWVGF	6
Braxton	Competitive	GSWYWVEL	6
Fayette	Competitive	GYBRWVGB	6
Berkeley	Competitive	HDVLWVHV	6
Summers	Competitive	HITNWVMM	6
Logan	Non-Competitive	HLDNWVHN	6
Cabell	Competitive	HNTNWVDT	5
Cabell	Competitive	HNWTWVWE	6
Putnam	Competitive	HRCNWVDD	6
McDowell	Non-Competitive	IAGRWVIR	6

*This CLLI code/Wire Center is a Grandfathered market, see Section 14.4(B).

© 2022 Frontier Communications Parent, Inc. All rights reserved

14. Operating Territory of the Frontier Telephone Companies (Cont'd)

14.4 Competitive and Non-Competitive Counties (Cont'd)

(C) Counties (Cont'd)

(1) West Virginia (Cont'd)

County	Status	SWC CLLI	Price Band
Berkeley	Competitive	INWDWVID	6
Lewis	Non-Competitive	JNLWWVJL	6
Preston	Competitive	KGWDWVMC	6
Kanawha	Competitive	KNCYWVVB	6
Mingo	Non-Competitive	KRMTWVME	6
Mineral	Non-Competitive	KYSRWVMR	6
Wood	Competitive	LBCKWVOR	6
Logan	Non-Competitive	LOGNWVHC	6
Greenbrier	Competitive	LWBGWVMW	6
Logan	Non-Competitive	MAN WVJU	6
Mason	Competitive	MASNWVBW	6
Fayette	Competitive	MDBRWVMB	6
Tyler	Non-Competitive	MDLBWVFA	6
Boone	Non-Competitive	MDSNWVCR	6
Monongalia	Competitive	MGTWWVFY	6
Wyoming	Competitive	MLNSWVGY	6
Cabell	Competitive	MLTNWVMN	6
Marion	Competitive	MNGHWVMC	6
Marion	Competitive	MNTNWVCE	6
Marshall	Non-Competitive	MNVLWVMO	6
Wood	Competitive	MNWLWVWD	6
Berkeley	Competitive	MRBGWVBU	5
Fayette	Competitive	MTGMWVMG	6
Fayette	Competitive	MTHPWVTN	6
Mingo	Non-Competitive	MTWNWVRJ	6
Hancock	Non-Competitive	NCLDWVNL	6
Kanawha	Competitive	NITRWVTW	6
Preston	Competitive	NWBGWVMV	6
Wetzel	Competitive	NWMRWVWZ	6

© 2022 Frontier Communications Parent, Inc. All rights reserved

14. Operating Territory of the Frontier Telephone Companies (Cont'd)

14.4 Competitive and Non-Competitive Counties (Cont'd)

(C) Counties (Cont'd)

(1) West Virginia (Cont'd)

County	Status	SWC CLLI	Price Band
Wyoming	Competitive	OCENWVON	6
Fayette	Competitive	OKHLWVCH	6
Logan	Non-Competitive	OMARWVOM	6
Putnam	Competitive	PCTLWVSV	6
Wetzel	Competitive	PDCYWVPN	6
Mineral	Non-Competitive	PDMTWVAA	6
Barbour	Non-Competitive	PHLPWVPI	6
Wyoming	Competitive	PIVLWVPV	6
Ritchie	Non-Competitive	PNBOWVPM	6
Wood	Competitive	PRBGWVKT	5
Monroe	Competitive	PRTWWVPT	6
Mason	Competitive	PTPLWVMU	6
Greenbrier	Competitive	RANLWVTR	6
Nicholas	Competitive	RCWDWVEA	6
Upshur	Competitive	RKCVWVAA	6
Jackson	Competitive	RPLYWVAB	6
Marion	Competitive	RVVLWVJS	6
Jackson	Competitive	RVWDWVSY	6
Preston	Competitive	RWBGWVMS	6
Harrison	Competitive	SALMWVWS	6
Putnam	Competitive	SCDPWVSD	6
Kanawha	Competitive	SCTNWVSO	6
Raleigh	Competitive	SHSPWVSS	6
Nicholas	Competitive	SMVIWVWT	6
Monongalia	Competitive	SNCRWVCL	6
Harrison	Competitive	SNTNWVSH	6
Raleigh	Competitive	SOPHWVSP	6
Roane	Competitive	SPNCWVSR	6
Kanawha	Competitive	SSVLWVSV	6

© 2022 Frontier Communications Parent, Inc. All rights reserved

14. Operating Territory of the Frontier Telephone Companies (Cont'd)

14.4 Competitive and Non-Competitive Counties (Cont'd)

(C) Counties (Cont'd)

(1) West Virginia (Cont'd)

County	Status	SWC CLLI	Price Band
Kanawha	Competitive	STALWVSA	5
Braxton	Competitive	STTNWVBA	6
Tyler	Non-Competitive	STVLWVFA	6
Preston	Competitive	TNTNWVGN	6
Preston	Competitive	TRRAWVSE	6
Kanawha	Competitive	TYHGWVBT	6
Monroe	Competitive	UNINWVWB	6
Wood	Competitive	VINNWVNN	6
Wood	Competitive	VLMLWVVL	6
Ohio	Competitive	VYGVWVVG	6
Ohio	Competitive	WDDLWVPR	6
Boone	Non-Competitive	WHVLWVFO	6
Ohio	Competitive	WLBTWVBN	6
Ohio	Competitive	WLNGWVCP	6
Roane	Competitive	WLTNWVWN	6
Wood	Competitive	WLTWWVJU	6
Harrison	Competitive	WMFRWVWM	6
Mingo	Non-Competitive	WMSNWVLG	6
Putnam	Competitive	WNFDWVWF	6
Hancock	Non-Competitive	WRTNWVDW	6
Ohio	Competitive	WRWDWVWR	6
Brooke	Non-Competitive	WSBGWVWU	6
Greenbrier	Competitive	WSSPWVDR	6
Lewis	Non-Competitive	WSTNWVCN	6
Hancock	Non-Competitive	WTHTWVHT	6
Doddridge	Competitive	WUNNWVED	6

© 2022 Frontier Communications Parent, Inc. All rights reserved

15. RESERVED FOR FUTURE USE

© 2022 Frontier Communications Parent, Inc. All rights reserved

16. Packet Data Services

16.1 Reserved for Future Use

16.2 Reserved for Future Use

16.3 Reserved for Future Use

16.4 Reserved for Future Use

© 2022 Frontier Communications Parent, Inc. All rights reserved

16. Packet Data Services (Cont'd)

16.5 IP (Internet Protocol) Routing Service

16.5.1 Service Description

The Telephone Company's IP (Internet Protocol) Routing Service, IPRS, provides for the collection, concentration and management of the customer's data traffic within a LATA. IPRS consists of network routers located at LATA hub sites that will collect the customer's end user data traffic and concentrate it for connection and transport over the Telephone Company's Packet Data Service to a customer's designated location.

The customer has the option of utilizing, as a feature of IPRS, Single Number Routing in lieu of local telephone numbers, which are included as part of IPRS. This option provides for all end users in a defined geographic area (i.e., a LATA) to have access to the customer via one specialized telephone number. The end user can initiate a call within the service area to the customer, and the call will be treated as a local call by the Telephone Company for the connection and duration of the call. This option is part of the standard IPRS offering and is included in the rates and charges for IPRS at no additional charge.

The following two alternatives are offered to the customer under this option:

1. The Telephone Company will assign a Single Number Routing telephone number from a 500 NPA; or
2. The customer can provide the Telephone Company with its own 555-XXXX telephone number acquired from the North American Numbering Plan Administration.

For those customers that opt for Single Number Routing, the Telephone Company will provision either a single 500 or 555 telephone number. If the customer requests additional 500 or 555 telephone numbers, special assembly charges will apply.

IPRS provides two types of ports for the collection of end user data traffic. The port type(s) is/are determined by the method(s) chosen by the customer for access to its end user(s). The two port types are:

© 2022 Frontier Communications Parent, Inc. All rights reserved

16. Packet Data Services (Cont'd)

16.5 IP (Internet Protocol) Routing Service (Cont'd)

16.5.1 Service Description (Cont'd)

1) Dial-up Port
2) IPRS DS1/1.544 Mbps Port*

The Dial-up Port type is intended for use with a single computer connection and not for connection to a Local Area Network (LAN).

IPRS does not include the end user access service. End user services and facilities are available from this and other public telephone network tariffs.

IPRS requires the use of RADIUS (Remote Authentication Dial-In User Service), a network security protocol, for the customer's authentication and authorization of its dial-up end user(s). See Section 16.5.2 following for technical references.

Maintenance and upgrades for IPRS are performed during the hours of 11:00 p.m. and 8:00 a.m. At times, during the hours of maintenance activity, it will be necessary to place a customer's service in an inactive or out-of-service condition. The amount of time that this scheduled out-of-service condition will exist is called a "maintenance window." The Telephone Company will provide the customer notice prior to the maintenance window and will work cooperatively with the customer to minimize service disruption. Maintenance window activity could be scheduled for consecutive days.

16.5.2 Technical Specifications

IPRS is provided in compliance with standards established by the Internet Architecture Board as stated in the following publications:

STD 0001, Internet Official Protocol Standards; J Postel, Editor, issued June 1997.

RFC 2138, Remote Authentication Dial-In User Service (RADIUS); C Rigney, A. Rubens, W. Simpson, S. Wilens., issued April 1997.

* Effective September 15, 2001, the IPRS DS1/1.544 Mbps Port will no longer be available for new service requests.

© 2022 Frontier Communications Parent, Inc. All rights reserved

16. Packet Data Services (Cont'd)

16.5 IP (Internet Protocol) Routing Service (Cont'd)

16.5.3 Terms and Conditions

(A) IPRS is a hubbed service. IPRS wire centers are designated in (B) following.

(B)

LATA	HUB Wire Center
Clarksburg	Clarksburg
Clarksburg	Morgantown
Charleston	Charleston
Charleston	Parkersburg

(C) IPRS is available on a month-to-month basis and for commitment periods of 3 years and 5 years.

Month-to-month service is subject to a minimum service period of 12 months.

(E) Customers electing a 3-year or 5-year term must also select a minimum port volume for the service period.

(F) IPRS is provided on a negotiated service date interval.

(G) IPRS is monitored and maintained 24 hours-a-day 7 days-a-week for trouble isolation and resolution.

(H) The customer is responsible for purchasing an adequate quantity of ports to accommodate originating dial-up traffic, which is delivered to the selected IPRS hub(s) for aggregation and routing to the customer's host location. A Port Capacity Report, furnished by the Telephone Company, that indicates 100% utilization for 30 minutes or more during any one-week period will require the customer to augment their port capacity accordingly in the affected hub(s).

© 2022 Frontier Communications Parent, Inc. All rights reserved

16. Packet Data Services (Cont'd)

16.5 IP (Internet Protocol) Routing Service (Cont'd)

16.5.4 Rate Regulations

A) All rate categories are billed monthly.

B) Nonrecurring charges apply for the installation of each port as set forth in Section 16.5.6 following.

A conversion of service to a new commitment period of equal or greater length than the remainder of the existing term does not incur nonrecurring charges for the existing port.

C) When the customer's commitment period ends, the rates associated with the quantity of ports installed under such commitment period will remain in effect.

D) Termination liability applies when a port is disconnected prior to the end of the minimum service period or prior to the end of the selected commitment period. Liability is assessed as follows:

Month-to-Month Service: The customer is responsible for 100% of the monthly rates for the entire 12-month minimum service period.

3 and 5-Year Terms: The customer is responsible for 100% of the monthly rate for the first 12 months and 15% of the remaining monthly charges.

Termination liability is waived if a port is converted to another term of equal or greater value in revenue than the remainder of the present term.

Termination liability is waived when a customer replaces one port for another type and commits to a term of equal or greater value in revenue than the remainder of the current commitment. The replacement is subject to applicable nonrecurring charges.

If the customer’s recurring rate increases, the customer may discontinue service without liability.

© 2022 Frontier Communications Parent, Inc. All rights reserved

16. Packet Data Services (Cont'd)

16.5 IP (Internet Protocol) Routing Service (Cont'd)

16.5.4 Rate Regulations (Cont'd)

(E) Customers with a 3-year or 5-year term commitment must order service with a volume commitment, enabling the customer to receive the discount applicable to the appropriate volume tier for the committed volume for all ports subscribed. Customers with this option and a 3-year term will have 12 months after the initial port installation to reach the committed port volume. Customers with a 5-year term who select this option will have 24 months after the initial port installation to reach the committed volume.

Six months after the end of the appropriate 12 or 24 month installation window, a review of the customer's account will be performed to verify that the committed volume level has been achieved. Rates will be adjusted accordingly based upon the number of ports in service.

Failure to achieve the guaranteed quantity of ports within the specified time frame will result in all ports being rerated to the applicable monthly rate for the quantity actually in service. In addition, a liability charge equal to the monthly rate per port at the guaranteed commitment level multiplied by the port shortfall (the difference between the committed volume and the actual number of ports in service) multiplied by 3 months will apply.

In the event the customer has exceeded the commitment level, and the number of ports in service qualifies for a lower monthly rate based upon the volume tier for that number of ports, all ports will be rerated to the new, lower monthly rate.

Customer account reviews will be performed semi-annually after the first review until the end of the commitment period.

(F) Customers with a 3-year or 5-year term commitment may add additional ports at any time during the commitment period at the rates applicable for the term commitment and the volume commitment initially selected. All ports will therefore be subject to a common expiration date for service commitment.

(G) IPRS ports must be purchased in increments of 23 ports, except where available as single port quantities.

(H) Upon receipt of a bona fide request from a customer for a port quantity in excess of 75,500 Ports, the Telephone Company will work cooperatively with the customer to develop a per port rate for the requested quantity. Once the per-port rate is developed and accepted by the customer, it will then be tariffed and made available to any other customers requesting that same port quantity.

© 2022 Frontier Communications Parent, Inc. All rights reserved

16. Packet Data Services (Cont'd)

16.5 IP (Internet Protocol) Routing Service (Cont'd)

16.5.4 Rate Regulations (Cont'd)

(I) IPRS Reports

(1) IPRS includes a text-based, preformatted Daily Capacity Report that includes all network elements and all items from the previous day. This report is provided to each IPRS customer each day via e-mail without charge.

(2) Customers desiring additional reports may choose optional Customer Service Management (CSM) Reports. The Telephone Company will provide IPRS customers with traffic reports and the ability to access this traffic data in near real-time via web-based access. The following reports will be available to the IPRS customer:

(a) Total Connections, Analog and Digital
(b) Analog and Digital Ratio
(c) Calls Increment (Measuring total calls received in ten minute intervals)
ISDN Connections
(e) Modem Connections (Measuring analog call connections)
(f) Seconds Increment (Measuring total duration in seconds for a specific period of time)
(g) Weekly Maximum for Total Connections, Analog and Digital

(3) Customers opting for the CSM Reports will have the ability to display varying time periods for archived data, in varying intervals (i.e., several days, weeks, or months up to 12 months prior). CSM customers will also have the ability to view the output data graphically. Appropriate output may also be displayed illustrating Raw Data, Peaks, or Averages. Polling across the IPRS network for the CSM reports occurs in 10-minute intervals on average. Output data is not available for the most recent 24 hours prior to the query.

(4) Recurring and Nonrecurring charges are based on a per-user access limited to six (6) IP addresses. The price entitles the customer to access the entire menu of available reports. Charges are assessed based on the size of the IPRS network (200 IPRS ports or less, or greater than 200 IPRS ports). If additional user access is needed, customers will be required to pay an additional appropriate monthly rate for each additional user access requested.

© 2022 Frontier Communications Parent, Inc. All rights reserved

16. Packet Data Services (Cont'd)

16.5 IP (Internet Protocol) Routing Service (Cont'd)

16.5.5 Rate Categories

A) Dial-up Port: Provides one data path connection in a local calling area of the company designated by the customer for analog/ISDN dial-up access to the customer by the customer's end users, and the IP routing of the end user data to the customer.

B) IPRS DS1/1.544 Mbps Port*: Provides connection and IP routing of end user data terminated over dedicated private line facilities at a speed of 1.544 Mbps.

* Effective September 15, 2001, these ports will no longer be available for new service requests

© 2022 Frontier Communications Parent, Inc. All rights reserved

16. Packet Data Services (Cont'd)

16.5 IP (Internet Protocol) Routing Service (Cont'd)

16.5.6 Rates and Charges
- per port

A) Dial-up Port

Port Category	Monthly Rate	Nonrecurring Charges
Month-to-Month		
Up to 75,500 Ports		
Price Band 4	56.00	35.00
Price Band 5	56.00	35.00
Price Band 6	56.00	35.00
Over 75,500 Ports	See 16.5.4(H) preceding	
3-year Term		
Up to 9,660 Ports		
Price Band 4	39.00	0.00
Price Band 5	39.00	0.00
Price Band 6	39.00	0.00
Up to 16,100 Ports		
Price Band 4	38.00	0.00
Price Band 5	38.00	0.00
Price Band 6	38.00	0.00
Up to 32,200 Ports		
Price Band 4	37.00	0.00
Price Band 5	37.00	0.00
Price Band 6	37.00	0.00
Up to 48,300 Ports		
Price Band 4	36.00	0.00
Price Band 5	36.00	0.00
Price Band 6	36.00	0.00
Up to 64,400 Ports		
Price Band 4	34.00	0.00
Price Band 5	34.00	0.00
Price Band 6	34.00	0.00
Up to 75,500 Ports		
Price Band 4	32.00	0.00
Price Band 5	32.00	0.00
Price Band 6	32.00	0.00
Over 75,500 Ports	See 16.5.4(H) preceding	

© 2022 Frontier Communications Parent, Inc. All rights reserved

16. Packet Data Services (Cont'd)

16.5 IP (Internet Protocol) Routing Service (Cont'd)

16.5.6 Rates and Charges (Cont'd)
- per port

A) Dial-up Port (Cont'd)

Port Category	Monthly Rate	Nonrecurring Charges
5-Year Term		
Up to 9,660 Ports		
Price Band 4	36.00	0.00
Price Band 5	36.00	0.00
Price Band 6	36.00	0.00
Up to 16,100 Ports		
Price Band 4	35.00	0.00
Price Band 5	35.00	0.00
Price Band 6	35.00	0.00
Up to 32,200 Ports		
Price Band 4	34.00	0.00
Price Band 5	34.00	0.00
Price Band 6	34.00	0.00
Up to 48,300 Ports		
Price Band 4	33.00	0.00
Price Band 5	33.00	0.00
Price Band 6	33.00	0.00
Up to 64,400 Ports		
Price Band 4	31.00	0.00
Price Band 5	31.00	0.00
Price Band 6	31.00	0.00
Up to 75,500 Ports		
Price Band 4	29.00	0.00
Price Band 5	29.00	0.00
Price Band 6	29.00	0.00
Over 75,500 Ports	See 16.5.4(H) preceding	

© 2022 Frontier Communications Parent, Inc. All rights reserved

16. Packet Data Services (Cont'd)

16.5 IP (Internet Protocol) Routing Service (Cont'd)

16.5.6 Rates and Charges (Cont'd)
- per port

B) DS-1 (1.544Mbps)*

Port Category	Monthly Rate	Nonrecurring Charges
Month-to-Month		
Price Band 4	175.00	200.00
Price Band 5	175.00	200.00
Price Band 6	175.00	200.00
3-Year Term		
Price Band 4	165.00	0.00
Price Band 5	165.00	0.00
Price Band 6	165.00	0.00
5-Year Term		
Price Band 4	150.00	0.00
Price Band 5	150.00	0.00
Price Band 6	150.00	0.00

* Effective September 15, 2001, these ports will no longer be available for new service requests.

CSM Reports

C) IPRS Networks of
200 IPRS Ports or Less
Per user

Price Band 4	50.00	100.00
Price Band 5	50.00	100.00
Price Band 6	50.00	100.00

D) IPRS Networks of Greater
Than 200 IPRS Ports
Per user

Price Band 4	350.00	500.00
Price Band 5	350.00	500.00
Price Band 6	350.00	500.00

© 2022 Frontier Communications Parent, Inc. All rights reserved

16. Packet Data Services (Cont'd)

16.6 Reserved for Future Use

16.7 Channel Extension Service#

Channel Extension Service provides dedicated point to point broadband data transmission between mainframe computers, between mainframes and peripheral devices and/or between Local Area Networks (LANs) using either a repeater backbone architecture or a dense wave division multiplexing (DWDM) backbone architecture.

16.7.1 Service Description

The repeater backbone architecture can support an ESCON (International Business Machines Corporation's (IBM's) Enterprise Systems CONnection protocol, ESCON® is an IBM registered trademark) or External Time Reference (ETR) interface with a bandwidth of 200 Mbps. The DWDM backbone architecture can support a bandwidth of up to 1.25 Gbps. Channel Extension Service is provided as a two point transmission between customer designated premises.

The ETR centralized time reference unit maintains time of day synchronization. This interface can be used on both the repeater backbone and the DWDM backbone architectures.

Channel Extension Service is provided over two fiber optic strands connecting the network interfaces at the customer designated premises. The repeater backbone architecture provides one ESCON channel over each fiber pair. The DWDM backbone architecture can provide up to fourteen channels over each fiber pair. For path redundancy, DWDM requires a second pair of fiber optic strands and a switch protection module in the equipment.

Effective October 5, 2007, orders for new Channel Extension Service are no longer permitted. The Telephone Company will continue to provide Channel Extension Service pursuant to this Section 16.7 on any existing Channel Extension Service that is in-service as of October 5, 2007, or any order for Channel Extension Service that is placed with the Telephone Company prior to October 5, 2007 (collectively, Existing CES), subject to the following condition:

The Telephone Company will continue to provide Existing CES to a term plan customer for the remainder of the customer's current commitment period plus an additional six (6) months beyond the expiration date of such commitment period at the existing rates of the current term plan, or until the customer replaces the Existing CES with a comparable Telephone Company provided service, or until the customer discontinues service, whichever occurs first. During the remainder of the current commitment period, and subject to the availability of facilities and equipment, orders involving additions and/or changes to Existing CES are permitted provided that they do not require a new commitment period. Orders involving additions and/or changes to Existing CES are not permitted during the additional six (6) month period.

© 2022 Frontier Communications Parent, Inc. All rights reserved

16. Packet Data Services (Cont'd)

16.7 Channel Extension Service# (Cont'd)

16.7.2 Technical Specifications

The technical specifications for Channel Extension Service using the repeater backbone architecture are described in the following technical publications:

ANSI INCITS 269-1997 (R2007) Fiber Channel Single-byte Command Code Sets Connection Architecture (SBCON)

Enterprise Systems Architecture/390 ESCON I/O Interface, Physical Layer
SA23-0394-06

ESA/390 ESCON I/O Interface
SA22-7202-02

ESCON Introduction
GA23-0383-01

Channel Extension Service using the DWDM backbone architecture is transparent for any data communications protocol and uses the application protocol of the attached device.

The compatible network channel interface code for Channel Extension Service using the repeater backbone architecture is 02FCF.20, and using the DWDM backbone architecture is 02FCF.125.

Service availability limited. Refer to # footnote on Page 16-12.

© 2022 Frontier Communications Parent, Inc. All rights reserved

16. Packet Data Services (Cont'd)

16.7 Channel Extension Service# (Cont'd)

16.7.3 Terms and Conditions

Channel Extension Service is available between a customer's two premises where suitable single mode fiber optic facilities exist to provide such service. Where suitable facilities do not exist to provide the service, the Telephone Company may require that facilities be specially constructed subject to the provisions set forth in Sections 2.1.4, Provision of Services, and 5.1.3, Special Construction, preceding.

Channel Extension Service is provided under a 3 year or 5 year term plan as selected by the customer. Each channel is established with a contract that begins with the date of installation.

Channel Extension Service is provided on a Negotiated Interval as described in Section 5 preceding.

The Company will provide monitoring of the signal to the parameters specified in the technical references.

The Company cannot guarantee the successful performance of this service on the repeater backbone architecture when the distance between premises exceeds 20 kilometers or when transmission loss is greater than 14db. In these instances, a repeater is required. The maximum distance from end to end is approximately 43 kilometers, and the maximum number of repeaters per channel is one. The Telephone Company will determine the wire center in which such repeaters will be utilized.

The Telephone Company cannot guarantee the successful performance of this service on the DWDM backbone architecture when the transmission loss between premises is greater than 17db with Path Protection and 23db without Path Protection. The DWDM architecture does not have regeneration capabilities. The customer's interface will be 13nm.

The customer is responsible for purchasing the appropriate circuits and associated equipment required to provide the Telephone Company with out-of-band monitoring of the network devices. These circuits will connect the equipment located at the customer's premises to a control center location.

Service availability limited. Refer to # footnote on Page 16-12.

© 2022 Frontier Communications Parent, Inc. All rights reserved

16. Packet Data Services (Cont'd)

16.7 Channel Extension Service# (Cont'd)

16.7.3 Terms and Conditions (Cont'd)

Network maintenance and network upgrades for Channel Extension Service are performed between 11:00pm and 8:00am. At times, during the hours of maintenance activity, it will be necessary to place a customer's service in an inactive (out of service) condition. The amount of time that this scheduled out of service condition will exist is called a "maintenance window." The Company will provide notice to the customer prior to the maintenance window. Down time during a maintenance window does not qualify for credit allowance as a service outage.

Moves and relocations of a channel termination are treated as disconnects.

Channel Extension Service is supported by the Telephone Company's Single Point of Contact (SPOC) center, which provides continuous maintenance, trouble resolution, and network monitoring twenty-four hours per day, seven days per week (24x7). Service order processing and network installation functions are preformed during normal business hours only.

16.7.4 Rate Regulations

The minimum payment period for Channel Extension Service is 3 years.

All rate elements of the same channel are charged in the same term plan.

At the expiration of a term plan, the customer’s Channel Extension Service will automatically be renewed at the currently effective 3 year or 5 year rate or the customer may subscribe to a new term plan.

Termination liability charges apply when a service is disconnected prior to the end of the selected term period. Liability is assessed as follows:

For the termination of a 3 year term plan prior to its expiration date, the termination liability is equal to 100% of the applicable monthly charges (channel terminations, mileage and either repeater or redundant path switching) for each month or fraction thereof remaining in the term plan.

For the termination of a 5 year term plan, the termination liability is equal to the difference between the monthly rates for 36 months at the 3-year term rates and the actual number of months the plan has been in effect multiplied by the 5-year monthly rates.

Termination liability is not assessed when the customer elects to change a current plan to a longer term plan. The current plan is cancelled and the new longer term plan is established.

Service availability limited. Refer to # footnote on Page 16-12.

© 2022 Frontier Communications Parent, Inc. All rights reserved

16. Packet Data Services (Cont'd)

16.7 Channel Extension Service# (Cont'd)

16.7.5 Rate Categories

Applicable rate categories with monthly recurring rates are channel termination, channel mileage, and where applicable, repeater or redundant path switching rate elements.

A channel termination rate element applies for each customer designated premises at which the channel is terminated. It includes the interface at each designated premises and the communications path from the premises to the serving wire center. As a two point service, each Channel Extension Service has two channel terminations. An Initial Channel Termination monthly recurring charge applies for the first channel termination at each premises. A Subsequent Channel Termination Charge applies for the second and any subsequent channel terminations added at each premises.

The channel mileage rate category applies for the interoffice transmission facilities between the serving wire centers. It consists of a fixed and a per mile rate element. See Section 7.4.6 preceding for mileage measurement.

The Repeater rate element applies when repeater equipment is required in a wire center to meet the transmission requirements for the service using the repeater backbone architecture. The Initial monthly recurring Repeater Charge applies for the first Channel Extension service requiring a repeater in a serving wire center. The Subsequent Repeater Charge applies to the second and all succeeding services requiring a repeater in the same wire center.

The Redundant Path Switching rate element applies when path redundancy is provided in the network for the service using the DWDM backbone redundancy.

Nonrecurring charges apply to the channel termination rate category. There are Initial and Subsequent charges that are applied on the same basis as the recurring rate element.

Service availability limited. Refer to # footnote on Page 16-12.

© 2022 Frontier Communications Parent, Inc. All rights reserved

16. Packet Data Services (Cont'd)

16.7 Channel Extension Service# (Cont'd)

16.7.6 Rates and Charges

	Monthly Rate	Nonrecurring Charge
(A) **Repeater Backbone Architecture**		
(1) **Channel Terminations**		
3 Year		
Per Initial Termination		
N-MSA	$3,600.00	$1,500.00
Price Band 4	3,600.00	1,500.00
Price Band 5	3,600.00	1,500.00
Price Band 6	3,600.00	1,500.00
Per Subsequent Termination		
N-MSA	1,250.00	1,100.00
Price Band 4	1,250.00	1,100.00
Price Band 5	1,250.00	1,100.00
Price Band 6	1,250.00	1,100.00
5 Year		
Per Initial Termination		
N-MSA	3,250.00	1,500.00
Price Band 4	3,250.00	1,500.00
Price Band 5	3,250.00	1,500.00
Price Band 6	3,250.00	1,500.00
Per Subsequent Termination		
N-MSA	900.00	1,100.00
Price Band 4	900.00	1,100.00
Price Band 5	900.00	1,100.00
Price Band 6	900.00	1,100.00

Service availability limited. Refer to # footnote on Page 16-12.

© 2022 Frontier Communications Parent, Inc. All rights reserved

16. Packet Data Services (Cont'd)

16.7 Channel Extension Service# (Cont'd)

16.7.6 Rates and Charges (Cont'd)

(A) **Repeater Backbone Architecture** (Cont'd)

(2) **Channel Mileage**

	Monthly Rate	
	Fixed	Per Mile
3 Year		
N-MSA	20.00	135.00
Price Band 4	20.00	135.00
Price Band 5	20.00	135.00
Price Band 6	20.00	135.00
5 Year		
N-MSA	15.00	100.00
Price Band 4	15.00	100.00
Price Band 5	15.00	100.00
Price Band 6	15.00	100.00

Service availability limited. Refer to # footnote on Page 16-12.

© 2022 Frontier Communications Parent, Inc. All rights reserved

16. Packet Data Services (Cont'd)

16.7 Channel Extension Service# (Cont'd)

16.7.6 Rates and Charges (Cont'd)

(A) **Repeater Backbone Architecture** (Cont'd)

(3) **Repeater**

	Monthly Rate	Nonrecurring Charge
3 Year		
Per Initial Circuit		
N-MSA	1,700.00	N/A
Price Band 4	1,700.00	N/A
Price Band 5	1,700.00	N/A
Price Band 6	1,700.00	N/A
Per Subsequent Circuit		
N-MSA	800.00	N/A
Price Band 4	800.00	N/A
Price Band 5	800.00	N/A
Price Band 6	800.00	N/A
5 Year		
Per Initial Circuit		
N-MSA	1,500.00	N/A
Price Band 4	1,500.00	N/A
Price Band 5	1,500.00	N/A
Price Band 6	1,500.00	N/A
Per Subsequent Circuit		
N-MSA	600.00	N/A
Price Band 4	600.00	N/A
Price Band 5	600.00	N/A
Price Band 6	600.00	N/A

Service availability limited. Refer to # footnote on Page 16-12.

© 2022 Frontier Communications Parent, Inc. All rights reserved

16. Packet Data Services (Cont'd)

16.7 Channel Extension Service# (Cont'd)

16.7.6 Rates and Charges (Cont'd)

(B) **Dense Wave Division Multiplexing Backbone Architecture**

(1) **Channel Terminations**

	Monthly Rate	Nonrecurring Charge
3 Year		
Per Initial Termination		
N-MSA	$4,600.00	$1,000.00
Price Band 4	4,600.00	1,000.00
Price Band 5	4,600.00	1,000.00
Price Band 6	4,600.00	1,000.00
Per Subsequent Termination		
N-MSA	900.00	500.00
Price Band 4	900.00	500.00
Price Band 5	900.00	500.00
Price Band 6	900.00	500.00
5 Year		
Per Initial Termination		
N-MSA	4,500.00	1,000.00
Price Band 4	4,500.00	1,000.00
Price Band 5	4,500.00	1,000.00
Price Band 6	4,500.00	1,000.00
Per Subsequent Termination		
N-MSA	750.00	500.00
Price Band 4	750.00	500.00
Price Band 5	750.00	500.00
Price Band 6	750.00	500.00

Service availability limited. Refer to # footnote on Page 16-12.

© 2022 Frontier Communications Parent, Inc. All rights reserved

16. Packet Data Services (Cont'd)

16.7 Channel Extension Service# (Cont'd)

16.7.6 Rates and Charges (Cont'd)

(B) **Dense Wave Division Multiplexing Backbone Architecture** (Cont'd)

(2) **Channel Mileage**

	Monthly Rate Fixed	Monthly Rate Per Mile
3 Year		
N-MSA	$20.00	$135.00
Price Band 4	20.00	135.00
Price Band 5	20.00	135.00
Price Band 6	20.00	135.00
5 Year		
N-MSA	15.00	100.00
Price Band 4	15.00	100.00
Price Band 5	15.00	100.00
Price Band 6	15.00	100.00

(3) **Redundant Path Switching**

	Monthly Rate	Nonrecurring Charge
3 Year Per Network		
N-MSA	600.00	N/A
Price Band 4	600.00	N/A
Price Band 5	600.00	N/A
Price Band 6	600.00	N/A
5 Year Per Network		
N-MSA	500.00	N/A
Price Band 4	500.00	N/A
Price Band 5	500.00	N/A
Price Band 6	500.00	N/A

Service availability limited. Refer to # footnote on Page 16-12.

© 2022 Frontier Communications Parent, Inc. All rights reserved

17. RESERVED FOR FUTURE USE

© 2022 Frontier Communications Parent, Inc. All rights reserved

18. RESERVED FOR FUTURE USE

© 2022 Frontier Communications Parent, Inc. All rights reserved

19. RESERVED FOR FUTURE USE

© 2022 Frontier Communications Parent, Inc. All rights reserved

20. RESERVED FOR FUTURE USE

© 2022 Frontier Communications Parent, Inc. All rights reserved

21. RESERVED FOR FUTURE USE

© 2022 Frontier Communications Parent, Inc. All rights reserved

22. RESERVED FOR FUTURE USE

© 2022 Frontier Communications Parent, Inc. All rights reserved

23. Dedicated Ring and Optical Services

23.1 Dedicated SONET Ring#

(A) General

(1) Dedicated SONET Ring (DSR) provides a customer a dedicated high capacity customized network. The network is in a ring architecture or topology that assures survivability and can be arranged as a full (closed) ring or as a partial ring. Partial rings are offered on Special Access DSR only. Full rings may subtend (interconnect with) each other as described in (B)(4) following.

(2) DSR is an alternative to basic High Capacity Special Access point-to-point service between multiple customer locations. DSR is an alternative to basic High Capacity Switched Access premises to hub service between a customer's location and an end office or tandem office. DSR is, therefore, rated discretely. Rate elements include nodes, port nodes, ports, high speed interfaces (certain partial ring configurations only) and mileage between nodes. Rates are specified in (L) following.

(3) Minimum period obligations can be found in Section 6.8.2(A) of Frontier FCC Tariff 4 for Switched Access DSR and Section 7.4.4(B) of this Guide preceding for Special Access DSR.

(4) Certain terms used in this Section 23.1 are defined in Section 6.8.25(B) of Frontier FCC Tariff 4 for Switched Access DSR and Section 7.2.14(B) preceding for Special Access DSR.

(5) Technical specifications are set forth in Section 6.8.25(A) of Frontier FCC Tariff 4 for Switched Access DSR and Section 7.2.14(A) preceding for Special Access DSR.

The following footnote is not applicable to the DS1, DS3, DS3 Transmux or STS1 Port, DS1, DS3 or STS1 Partial Ring Channel Mapping rate elements of DSR. Effective May 31, 2007, orders for new DSR are no longer permitted. The Telephone Company will continue to provide DSR pursuant to this Section 23.1 on any existing DSR that is in-service as of May 31, 2007, or any order for DSR that is placed with the Telephone Company prior to May 31, 2007 (collectively, Existing DSR), subject to the following conditions:

a. For any Existing DSR that is currently subscribed to a term plan (i.e., commitment periods of 3-, 5-, and 7-years), the Telephone Company will continue to provide the Existing DSR for an additional six (6) months beyond the expiration date of the customer's current commitment period, or until the customer replaces the Existing DSR with a comparable Telephone Company provided service, or discontinues service, whichever comes first. Subject to the availability of facilities and equipment, additions and/or changes to the Existing DSR are permitted during the current commitment period provided that such additions and/or changes do not require a new commitment period or an extension to an existing commitment period.

b. For any Existing DSR whose term plan expired prior to May 31, 2007, but the Existing DSR continued on a month-to-month basis at prevailing rates, the Telephone Company will continue to provide the Existing DSR until November 30, 2007, or until the customer replaces the Existing DSR with a comparable Telephone Company provided service, or discontinues service, whichever comes first. Additions and/or changes are not permitted.

© 2022 Frontier Communications Parent, Inc. All rights reserved

23. Dedicated Ring and Optical Services

23.1 Dedicated SONET Ring# (Cont'd)

(A) General (Cont'd)

(B) Service Description

(1) Full Ring

(a) A full DSR ring provides connectivity to multiple customer designated locations (nodes). A full ring must have a minimum of three nodes with at least one of the nodes being located in a Company Central Office (CO) and one being located at a customer premises. One or more full rings may interconnect with each other in a subtending ring configuration as described in (B)(4) following.

(b) An example of a full Dedicated SONET Ring is diagrammed below:

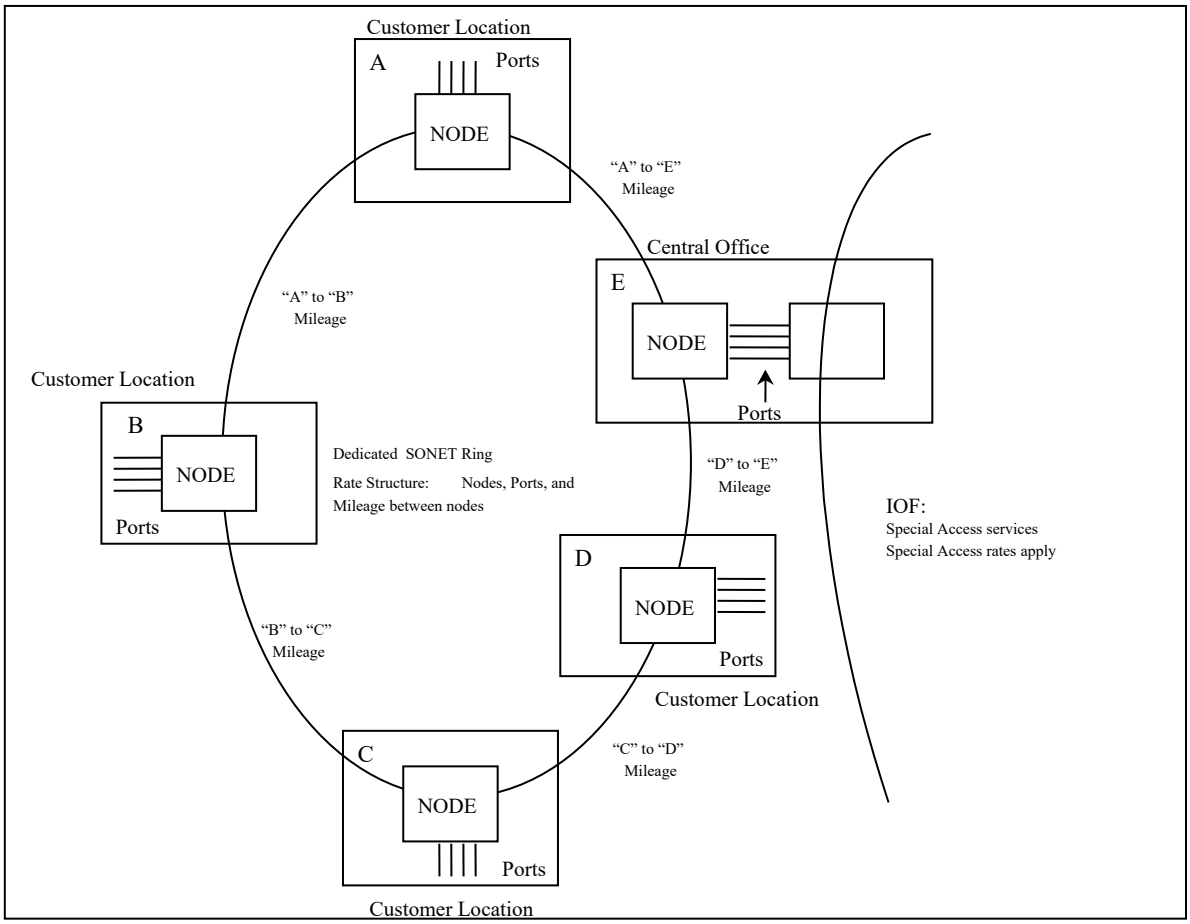

Service availability limited. Refer to # footnote on Page 23-1.

© 2022 Frontier Communications Parent, Inc. All rights reserved

23. Dedicated Ring and Optical Services (Cont'd)

23.1 Dedicated SONET Ring# (Cont'd)

(B) Service Description (Cont'd)

(2) Partial Ring*

(a) A partial DSR ring provides connectivity to multiple customer designated locations (nodes) between fiber meet locations at which high speed interconnection of the Telephone Company's backbone network facilities to the customer's facilities or the facilities of a third party occurs. Partial ring service may only be interconnected to (1) another partial ring provided by the Telephone Company or (2) ring facilities provided by the customer or third party. Subtending rings may not interconnect with, or be associated with, a partial ring. The portion of the ring provided by the customer or third party must use vendor equipment that matches the equipment used by the Telephone Company and must maintain the same vintage in software release as the Telephone Company. Upon written notice by the Telephone Company, the customer or third party will have sixty (60) days in which to complete the change out of any software release deployed by the Telephone Company.

(b) The partial ring must have a minimum of two devices (enhanced nodes or high speed interfaces) with a device at each fiber meet location and at least one node on the partial ring must be in a CO. When the partial ring is provided over an Dedicated SONET Optical Transport Service (DSOTS) or a Telephone Company provided DWDM ring service, the DSOTS/DWDM ring service device(s) are counted towards satisfying the minimum device requirement at each fiber meet location on the DSR partial ring. High speed interconnection may occur at a customer's designated premises, a Telephone Company central office or a location that is mutually agreeable to both the customer and the Telephone Company (such location will be designated as a premises for the purpose of administering the general regulations set forth in this Guide).

(c) Fiber Meet

(1) When the fiber meet occurs at a customer's designated premises, the point of interconnection between the Telephone Company's facilities and the facilities of the customer or of a third party shall be a node.

(2) When the fiber meet occurs in a Telephone Company wire center, high speed interconnection from the device (DSR node, DSOTS/DWDM ring service node or DSOTS/DWDM ring service amplifier, as applicable) occurs at a collocation arrangement via fiber cross-connects between the Telephone Company's fiber optic facilities and the customer’s or third party’s facilities.

(3) When the fiber meet occurs at a mutually agreed upon location, the point of interconnection shall be a high speed (pass-through) interface.

* Special Access configurations only.

Service availability limited. Refer to # footnote on Page 23-1.

© 2022 Frontier Communications Parent, Inc. All rights reserved

23. Dedicated Ring and Optical Services (Cont'd)

23.1 Dedicated SONET Ring# (Cont'd)

(B) Service Description (Cont'd)

(2) Partial Ring* (Cont'd)

(c) Fiber Meet (Cont'd)

(4) The Telephone Company's network design will define the optical parameters at the fiber meet locations. The Telephone Company is responsible for the quality and integrity of the high speed optical signal at the fiber meet where its facilities are interconnected to the facilities of the customer or of the third party. The Telephone Company bears no responsibility for the optical parameters beyond the fiber meet (i.e., in the facilities of the customer or of the third party). The customer or third party is responsible for engineering its portion of the jointly provided ring. At their option, the Telephone Company will engineer the customer or third party's portion of the ring within the LATA subject to Additional Engineering as set forth in Section 13.1 preceding.

(5) The customer must provide the Telephone Company with its fiber optic facility requirements (i.e., whether it will use single mode fiber or multi-mode fiber) prior to the Telephone Company ordering the necessary SONET network equipment to provide the requested service. The customer may utilize its own fiber optic facilities or the facilities of a third party.

(6) Interconnection to DSR partial ring services may occur (i) at the customer's designated premises for which interconnection will occur via a node; (ii) in a Telephone Company wire center for which interconnection from a device will occur at a collocation arrangement via fiber cross-connects as described in Section 19 preceding; or (iii) at a mutually agreed upon location where interconnection occurs via a high speed (pass-through) interface. Interconnection to other Telephone Company services may not occur at the mutually agreed upon fiber meet location utilizing a high speed interface.

(7) Interconnection to DSR partial ring service is limited to high speed fiber interconnection of the Telephone Company's backbone network fiber optic facilities and the fiber optic facilities of the customer or of a third party.

When ordering lower speed channels that originate at and terminate to nodes which are not within the partial ring provided by the Telephone Company, the customer must provide the Telephone Company with a copy of the order. This order provides the Telephone Company with authority to perform the necessary mapping of the channel through the partial ring to ensure continuity of the signal over the jointly provided ring. A Channel Mapping nonrecurring charge will apply for each channel mapped through the Telephone Company provided partial ring. Channel mapping charges do not apply when ordering channels that originate at and/or terminate to nodes on the Telephone Company's portion of the partial ring.

* Special Access configurations only.

Service availability limited. Refer to # footnote on Page 23-1.

© 2022 Frontier Communications Parent, Inc. All rights reserved

23. Dedicated Ring and Optical Services (Cont'd)

23.1 Dedicated SONET Ring# (Cont'd)

(B) Service Description (Cont'd)

(2) Partial Ring* (Cont'd)

(e) An example of a partial Dedicated SONET Ring is diagrammed below:

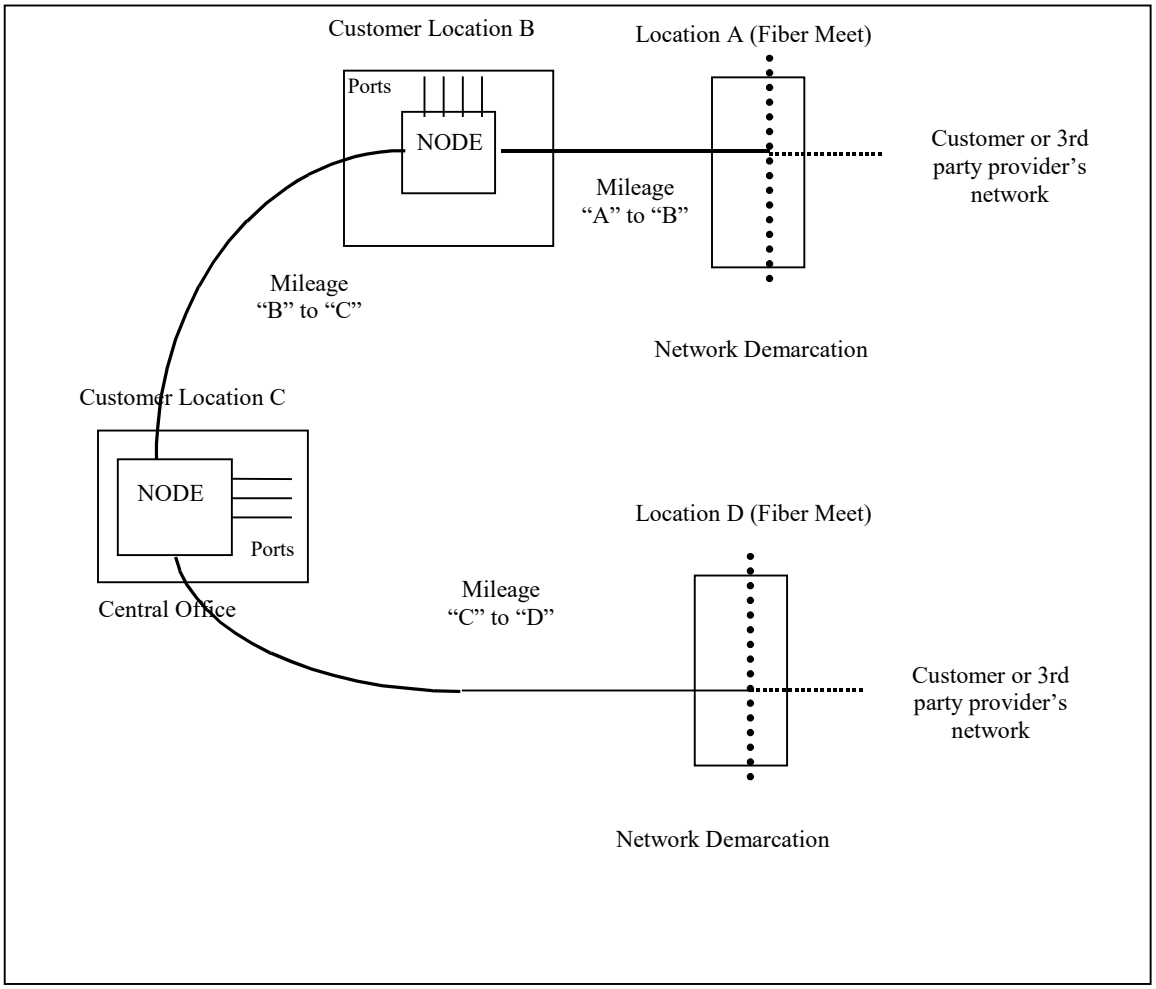

* Special Access configurations only.

Service availability limited. Refer to # footnote on Page 23-1.

© 2022 Frontier Communications Parent, Inc. All rights reserved

23. Dedicated Ring and Optical Services (Cont'd)

23.1 Dedicated SONET Ring# (Cont'd)

(B) Service Description (Cont'd)

(3) Ring-On-Ring

When DSR is provided in a ring on ring design, the following requirements apply:

- The lower speed ring must have a minimum of two nodes located at the customer premises or Company wire center.
- The Company must provide the lower speed nodes.
- Each lower speed node must be located at the same customer premises or Company wire center as its corresponding higher speed node.
- Ring-on-Ring designs may not include a mix of enhanced nodes and those nodes that are not enhanced.

(4) Subtending Rings

The customer may interconnect two (2) or more full rings in a subtending ring configuration subject to the following:

(a) One (1) of the DSR full rings must be designated by the customer as the main ring from which the other DSR full ring(s) will subtend. The main ring must be of equal or greater capacity than each DSR full ring that subtends the main ring. For example, a main ring that is an OC12 DSR can have an OC3 and/or OC12 subtending ring but can not have an OC48 subtending ring. The number of rings that can subtend a main ring may be limited by the type and capacity of the nodes and port configuration specific to the customer's overall DSR service configuration.

(b) Interconnection between the main ring and the subtending ring occurs via a port node. A port node provides high speed interconnection between an enhanced node on the main ring and the high speed facilities of the port node on the subtending ring, and applies in lieu of the enhanced node on the subtending ring at that location. Each subtending ring requires one port node at the point of interconnection to the enhanced node on the main ring. Interconnection between the main ring and a subtending ring may occur at a customer designated premises or within a Telephone Company wire center where such nodes are located. Up to two (2) points of interconnection are allowed per subtending ring. A port node is required per point of interconnection.

(c) Only DSR full rings that utilize suitably equipped enhanced nodes can be arranged in subtending ring configurations. Subtending ring configurations are not available on DSR full rings utilizing nodes that are not enhanced.

Service availability limited. Refer to # footnote on Page 23-1.

© 2022 Frontier Communications Parent, Inc. All rights reserved

23. Dedicated Ring and Optical Services (Cont'd)

23.1 Dedicated SONET Ring# (Cont'd)

(B) Service Description (Cont'd)

(4) Subtending Rings (Cont'd)

Each ring in a subtending ring configuration must be arranged as a unidirectional path switched ring (UPSR) and must use enhanced nodes. Bidirectional line switched rings (BLSR) may not be arranged in subtending ring configurations.

(e) DSR partial rings may not be arranged in subtending ring configurations.

(f) Where two (2) points of interconnection between the subtending ring and the main ring are provided, circuits originating on the main ring may be mapped to the subtending ring and circuits originating on the subtending ring may be mapped to the main ring. Channels mapped across the two (2) interconnecting nodes are subject to Dual Node Cross-connect Channel Mapping charges as described in (B)(4)(m) following.

(g) The main ring and any subtending rings associated with the main ring must individually meet the minimum requirement of three (3) nodes, except that only one (1) node for the entire service configuration must be located in a Telephone Company wire center. For example, if the main ring has one (1) node located in a Telephone Company wire center and two (2) nodes located at customer designated premises, the subtending ring(s) need not have a node that is located in a Telephone Company wire center.

(1) When determining if the minimum number of nodes on a subtending ring has been met, the port node providing interconnection to the main ring is included in the count.

(2) When determining if the minimum number of nodes on a subtending ring has been met, the enhanced node on the main ring that interconnects with the subtending ring is not included in the count.

Service availability limited. Refer to # footnote on Page 23-1.

© 2022 Frontier Communications Parent, Inc. All rights reserved

23. Dedicated Ring and Optical Services (Cont'd)

23.1 Dedicated SONET Ring# (Cont'd)

(B) Service Description (Cont'd)

(4) Subtending Rings (Cont'd)

(h) Each subtending ring may only interconnect with one (1) main ring.

(i) Subtending ring configurations may be established using new DSR full rings, existing DSR full rings, or a combination of new and existing DSR full rings.

(j) All DSR rings in the same subtending ring configuration must be billed to the same customer.

(k) An example of a subtending ring configuration with two (2) points of interconnection to the main ring is diagrammed below:

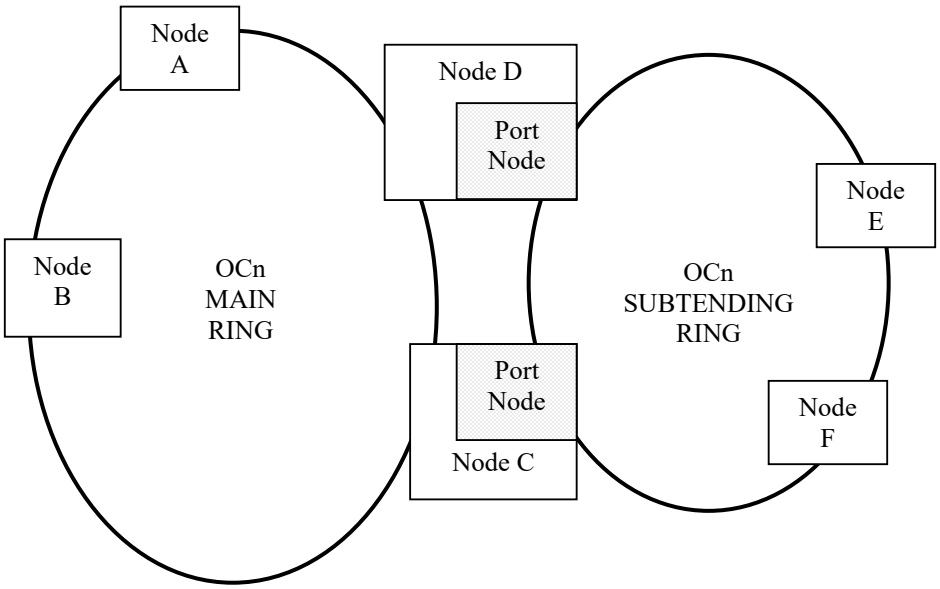

Applicable rate elements:
- Nodes (6)
- Port Node (2)
- Mileage for circumference of Main Ring
- Mileage for circumference of Subtending Ring

Service availability limited. Refer to # footnote on Page 23-1.

© 2022 Frontier Communications Parent, Inc. All rights reserved

23. Dedicated Ring and Optical Services (Cont'd)

23.1 Dedicated SONET Ring# (Cont'd)

(B) Service Description (Cont'd)

(4) Subtending Rings (Cont'd)

(l) Lower speed services provided over DSR must ingress at a node on either ring (the main ring or the subtending ring) and egress at a node on either ring (the subtending ring or the main ring). A single port charge applies at the point of ingress and a single port charge applies at the point of egress, unless the ingress and/or egress occurs via an asymmetrical port facility in which case a separate port charge will not apply for each such ingress or egress.

(m) At the customer's option, a lower level service may interconnect the main and one (1) or more of the subtending ring(s) through two (2) separate points of interconnection with each subtending ring. In this case, a single Dual Node Cross-connect Charge applies per lower level service provided across the interconnecting port nodes, regardless of the number of subtending rings involved. The Dual Node Cross-connect Charge does not apply when a lower level service interconnects the main and subtending ring(s) through a single point of interconnection.

In the event that the customer elects to make a subtending ring an independent full DSR, the independent full DSR ring must meet all of the requirements for a DSR full ring as set forth in (B)(1) preceding. This may require an additional node in order to satisfy the minimum node requirement for a single, independent ring.

(5) The customer must provide, at no cost to the Telephone Company, suitable and secure space, suitable environmental conditions, and uninterrupted power supply, building entrance facilities, and conduit for placement of the facilities and network equipment at its locations as necessary to provide the service.

(6) The customer will be billed additional charges for any charges levied the Telephone Company for space and power required to place ADMs on the Telephone Company's side of the network interface.

Service availability limited. Refer to # footnote on Page 23-1.

© 2022 Frontier Communications Parent, Inc. All rights reserved

23. Dedicated Ring and Optical Services (Cont'd)

23.1 Dedicated SONET Ring# (Cont'd)

(B) Service Description (Cont'd)

(7) Connections to Other Services

(a) DSR may connect to Dedicated SONET Optical Transport Service (DSOTS) optical transport channels as set forth in Section 6.8.25 (C)(6) or 7.2.14(C)(4) preceding. DSOTS combines Dense Wave Division Multiplexing (DWDM) and SONET technologies to create a high-speed backbone network configured in a ring architecture. When the DSR partial ring is provided over a DSOTS, the DSOTS nodes through which the DSR partial ring is configured are included in the minimum device requirement at each fiber meet location for a DSR partial ring.

(b) A Switched or Special Access DSR port may connect to an equal speed Dedicated SONET Broadband Transport (DSBT) Service, an equal speed DSBT multiplexing node or an equal speed port of a multiplexed DSBT service.

(c) Reserved

Ethernet Private Line STS1, OC3, OC3c, OC12, OC12c, and OC48 Ethernet-to-SONET mapped services (as set forth in Section 7.2.16 preceding) may be connected to Special Access STS1, OC3, OC3c, OC12, OC12c, and OC48 ports, respectively, via symmetrical or asymmetrical port arrangements.

(1) In a symmetrical port arrangement, one (1) of such ports applies on the higher-speed node at the Telephone Company wire center where the service enters the ring, and a second port of the same capacity applies on the higher-speed node where the service exits the ring. For example, an Ethernet Private Line OC3c Ethernet-to-SONET mapped service would require two (2) OC3c ports in a symmetrical port arrangement (one port to enter the ring and one port to exit the ring).

(2) In an asymmetrical port arrangement, one of such ports referenced above applies on the higher-speed node at the Telephone Company wire center where the service enters the ring, and the service exits the ring via the OCn port associated with the Asymmetrical Port Facility. More than one such service referenced above may utilize the same Asymmetrical Port Facility and OCn Port of that Asymmetrical Port Facility. For example, three (3) Ethernet Private Line OC12 Ethernet-to-SONET mapped services require 3 OC12 ports (one port for each service) to enter the ring, and all 3 of such services could be provided over an OC48 Asymmetrical Port Facility, and exit the ring via the same OC48 port of that facility. The number of services that can exit the ring via the same port is limited by the STS1 capacity utilized for the connecting service.

Service availability limited. Refer to # footnote on Page 23-1.

© 2022 Frontier Communications Parent, Inc. All rights reserved

23. Dedicated Ring and Optical Services (Cont'd)

23.1 Dedicated SONET Ring# (Cont'd)

(B) Service Description (Cont'd)

(7) Connections to Other Services (Cont'd)

(e) Ethernet services are provided on a point-to-point basis (i.e., native Ethernet to native Ethernet) between two suitably equipped DSR premises nodes. Additionally, Ethernet Private Line Gigabit Ethernet (transmitted at 50, 150, 300, 450, 600 Mbps or Full Rate) may be connected to a DSR OC48 or OC192 enhanced CO node. The connection of Ethernet Private Line Gigabit Ethernet to DSR will occur via a Special Access DSR GigE-1, 3, 6, 9, 12 or 24 port on the CO node. When Ethernet Private Line customers under a three, five, or seven-year commitment period connect their Ethernet Private Line Gigabit Ethernet service to DSR, the DSR GigE ports must be provided under the same length commitment period. When Ethernet Private Line customers under a one-year commitment period connect their Ethernet Private Line Gigabit Ethernet service to DSR, the DSR GigE ports will be provided at month-to-month rates. Ethernet Private Line Gigabit Ethernet is further described in Section 7.2.16 preceding. Native to native Ethernet services may not be provided over an asymmetrical port facility.

(f) When a customer transmits STS1, Internet Protocol or Ethernet signals, the mapping feature must be designated.

(g) Extended Superframe Format (ESF) is required on all DS1 circuits in order to ensure performance objectives.

(h) DSR may also be connected to the following Telephone Company provided services, provided that such connections are technically and operationally feasible, as determined by the Telephone Company:

- DWDM ring service
- point-to-point SONET service
- Ethernet private line service
- dedicated SONET ring service

Service availability limited. Refer to # footnote on Page 23-1.

© 2022 Frontier Communications Parent, Inc. All rights reserved

23. Dedicated Ring and Optical Services (Cont'd)

23.1 Dedicated SONET Ring# (Cont'd)

(C) Service Components

The service components of DSR include:

- Nodes and Subtending Nodes
- Port Nodes
- Ports
- High Speed Interfaces (certain partial ring configurations only)
- Mileage between nodes
- Optional Features

(1) Nodes and Subtending Nodes

(a) The customer specifies the ring capacity in terms of optical carrier rates. DSR is available in capacities of OC3, OC12, OC48 and OC192. In addition, an OC12/3 node is available on OC12 DSRs. Lower speed channel services are provided between nodes via port designations. DSR may be provided with enhanced nodes that allow for additional port options. Enhanced nodes are available on ring capacities of OC12, OC48, and OC192 for Switched Access services. Enhanced nodes are available on ring capacities of OC3, OC12, OC48, and OC192 for Special Access services.

(b) The following ports are accepted speeds on nodes that are not enhanced.

Nodes:	OC3	OC12/3	OC12	OC48	OC192
DS1 Ports	X	X			
DS3 Ports	X	X	X	X	X
STS1 Ports	X	X	X	X	X
OC3 Ports*			X	X	X
OC3c Ports*			X	X	X
OC12 Ports*				X	X
OC12c Ports*				X	X
OC48 Ports*					X
OC48c Ports*					X

* May also be utilized with service connecting to certain advanced data services. Concatenation is not allowed on Switched Access ports.

Service availability limited. Refer to # footnote on Page 23-1.

© 2022 Frontier Communications Parent, Inc. All rights reserved

23. Dedicated Ring and Optical Services (Cont'd)

23.1 Dedicated SONET Ring# (Cont'd)

(C) Service Components (Cont'd)

(1) Nodes and Subtending Nodes (Cont'd)

(c) The type of ports that are supported on an enhanced node may limit the maximum number of ports that are provided on that node. Upon installation of a new ring, the customer must provide the Telephone Company with an initial port requirement and a forecast of future port requirements on that node which the Telephone Company will utilize when engineering the port configuration for that node.

Enhanced Nodes =	OC3	OC12	OC48	OC192
DS1 Ports	X	X	X	X
DS3 Ports	X	X	X	X
DS3 Transmux Ports	X	X	X	X
STS1 Ports	X	X	X	X
OC3 Ports*		X	X	X
OC3c Ports*		X	X	X
OC12 Ports*			X	X
OC12c Ports*			X	X
OC48 Ports*				X
OC48c Ports*				X
Ethernet Ports				
GigE-1 Ports	X	X	X	X
GigE-3 Ports		X	X	X
GigE-6 Ports		X	X	X
GigE-9 Ports		X	X	X
GigE-12 Ports			X	X
GigE-24 Ports			X	X
Storage Interface Ports				
Fibre Channel at 1 Gbps		X	X	
FICON at 1 Gbps			X	X

Additional nodes could be required to maintain service quality levels. Generally, a transmission of 20 or more miles or a transmission through 6 or more COs will be subject to loss of signal integrity, and would require an additional node. A regeneration node requires a full capacity node, i.e., an OC12/3 node cannot be used to regenerate transmission on an OC12 ring.

* May also be utilized with service connection to certain advanced data services. Concatenation is not allowed on Switched Access ports.

Service availability limited. Refer to # footnote on Page 23-1.

© 2022 Frontier Communications Parent, Inc. All rights reserved

23. Dedicated Ring and Optical Services (Cont'd)

23.1 Dedicated SONET Ring# (Cont'd)

(C) Service Components (Cont'd)

(1) Nodes and Subtending Nodes (Cont'd)

(e) Except for DSR utilizing enhanced nodes, the customer may provide a single node and associated port equipment at one of its premises subject to compatibility with the Telephone Company's equipment in the COs. This compatibility requires that the customer, at its own expense, uses matching vendor's equipment and maintains the same vintage in software release as the Telephone Company. Upon written notification from the Telephone Company, the customer has 60 days in which to complete the change out of software. In addition, the customer must configure the node to limit access to the data communications channel of the node.

(f) The Telephone Company can not ensure the performance monitoring of the ring when it is equipped with customer provided nodes.

(g) Subtending Nodes

(1) A subtending node is an enhanced node that subtends another enhanced node of a higher speed (e.g., an OC12 enhanced node may subtend an OC192 enhanced node).

(2) More than one (1) lower speed enhanced node may subtend the same higher speed enhanced node.

(3) The connection between the higher and lower speed enhanced nodes is a SONET facility (Subtending Node Facility) between an OCn port on the higher speed node and the lower speed node which must be of the same optical carrier rate as the OCn port on the higher speed node.

(4) When the higher speed enhanced node is located at a customer designated premises, the subtending node(s) must be located at the same customer designated premises.

(5) When the higher speed enhanced node is located at a Telephone Company wire center, the subtending node(s) may be located within that same wire center or extended to a customer designated premises that is served by that wire center or by a different wire center. When extending the subtending node to a customer designated premises, the subtending node facility is subject to a channel extension charge. When the customer designated premises is not served by the same wire center as the higher speed enhanced node, mileage applies between the wire centers involved. Mileage applies in addition to the channel extension charge.

(h) When a customer premises node is located in the same building as a CO node, there will be no diversity between the two nodes.

Service availability limited. Refer to # footnote on Page 23-1.

© 2022 Frontier Communications Parent, Inc. All rights reserved

23. Dedicated Ring and Optical Services (Cont'd)

23.1 Dedicated SONET Ring# (Cont'd)

(C) Service Components (Cont'd)

(2) Ports

(a) Ports may be ordered in a symmetrical arrangement (e.g., DS3 Port to DS3 Port), an asymmetrical arrangement (e.g., OC12 Port to DS3 Port) or in certain transmuxing arrangements as specified preceding. Ports are not provided at mutually agreed upon locations where a high speed (pass-through) interface is utilized.

(b) Signals transported over DSR will be mapped as follows:

DS1 mapped as VT1.5
DS3 mapped as STS1
STS1 mapped as STS1
OC3 mapped as 3 STS1s
OC3c* mapped as one STS3c channel or STS1-3v
OC12 mapped as 12 STS1s
OC12c* mapped as one STS12c channel or STS1-12v
OC48 mapped as 48 STS1s
OC48c* mapped as one STS48c channel or STS1-48v
Gigabit Ethernet* (available with enhanced nodes only)
- GigE1 (mapped as 1 STS1 or STS1-1v channel)
- GigE3 (mapped as a STS1-3v channel or 1 STS3c channel)
- GigE6 (mapped as a STS1-6v channel or 1 STS6c channel)
- GigE9 (mapped as a STS1-9v channel or 1 STS9c channel)
- GigE12 (mapped as a STS1-12v channel or 1 STS12c channel)
- GigE24 (mapped as a STS1-21v channel or 1 STS24c channel)

Storage Interface* (available with enhanced nodes only)
- Fibre Channel (mapped as a STS1-19v channel)
- FICON (mapped as a STS1-19v channel)

* Special Access Ports only

Service availability limited. Refer to # footnote on Page 23-1.

© 2022 Frontier Communications Parent, Inc. All rights reserved

23. Dedicated Ring and Optical Services (Cont'd)

23.1 Dedicated SONET Ring# (Cont'd)

(C) Service Components (Cont'd)

(2) Ports (Cont'd)

(c) Asymmetrical Ports

(1) Asymmetrical ports allow lower level services to be added to, and dropped from, DSR using ports with different transmission rates. For example, a DS1 channel can be added to the ring via a DS3 port and dropped from the ring via a DS1 port. These lower level services may originate and/or terminate at locations that are on or off of the DSR.

(2) For OCn ports, the port with the higher transmission rate uses a facility (Asymmetrical Port Facility or (APF), which is also referred to as a Stub Hub), which is channelized to individual services requiring lower capacity facilities and lower capacity ports. Only one (1) such higher transmission rate OCn port applies per asymmetrical port arrangement. The number of lower capacity services that can utilize the same Stub Hub is limited by the total STS1 capacity of the connecting services. Available transmission rates for the APF are dependent on the capacity of the port to which it is connected. For example, an OC12 APF cannot be established on an OC3 Port. Additionally, the capacity of the port is dependent on the capacity of the node involved.

(3) The APF provides a two-point channelized facility between a customer designated premises or a Collocated Interconnection arrangement and the OCn higher transmission rate port of the asymmetrical port combination. Such port may be associated with a node that is located at either the customer designated premises or within a Telephone Company wire center.

(a) When the APF is located at the customer's designated premises, the APF is provided between the customer's designated premises and the port on the associated node located at that same premises. Rates and charges for the port apply as set forth in following.

(b) When the APF is located in a Telephone Company wire center and the APF connects to a customer designated premises that is served by the same wire center, an asymmetrical port channel extension applies to extend the APF to the customer designated premises. Rates and charges for the asymmetrical port channel extension apply in addition to the rates and charges for the port as set forth in following.

Service availability limited. Refer to # footnote on Page 23-1.

© 2022 Frontier Communications Parent, Inc. All rights reserved

23. Dedicated Ring and Optical Services (Cont'd)

23.1 Dedicated SONET Ring# (Cont'd)

(C) Service Components (Cont'd)

(2) Ports (Cont'd)

(c) Asymmetrical Ports (Cont'd)

(3) (Cont'd)

(c) When the APF is located in a Telephone Company wire center and the APF connects to a customer designated premises that is served by a different wire center, an asymmetrical port channel extension and mileage applies to extend the APF to the customer designated premises. Rates and charges for the asymmetrical port channel extension and mileage apply in addition to the rates and charges for the port as set forth in following.

When the APF is located in a Telephone Company wire center and the APF connects to a Collocated Interconnection arrangement that is located within the same wire center as the node, a port charge applies as set forth in following.

(e) When the APF is located in a Telephone Company wire center and the APF connects to a Collocated Interconnection arrangement that is not located within the same wire center as the node, mileage applies to extend the APF to the Collocated Interconnection arrangement. Rates and charges for the mileage apply in addition to the rates and charges for the port as set forth in following.

(f) For (C)(2)(c)(3)(c) through (e) preceding, channel termination or cross-connect charges apply in addition to the port, asymmetrical port channel extension, and mileage charges. Channel termination charges apply in accordance with Sections 6 and 7 preceding. Cross-connection to Collocated Interconnection Service arrangements apply in accordance with Section 19 preceding.

Service availability limited. Refer to # footnote on Page 23-1.

© 2022 Frontier Communications Parent, Inc. All rights reserved

23. Dedicated Ring and Optical Services (Cont'd)

23.1 Dedicated SONET Ring# (Cont'd)

(C) Service Components (Cont'd)

(2) Ports (Cont'd)

(c) Asymmetrical Ports (Cont'd)

(4) Asymmetrical ports are available in the following combinations:

Ring Capacity	APF Rate	Asymmetrical Port Combinations**
OC3 DSR Ring	N/A	DS3 Transmux - DS1*
	STS-1	STS1 - DS3 STS1 - DS1*
OC12 DSR Ring	N/A	STS1 - DS3 DS3 Transmux - DS1*
	OC3	OC3 - STS1 OC3 – DS3 OC3 - DS1* OC3 - GigE3* OC3 - GigE1*
OC48 DSR Ring	N/A	STS1 - DS3 DS3 Transmux - DS1*
	OC12	OC12 - OC3 OC12 – OC3c OC12 - STS1 OC12 - DS3 OC12 - DS1* OC12 – GigE12* OC12 – GigE9* OC12 - GigE6* OC12 - GigE3* OC12 - GigE1*
	OC3	OC3 - STS1 OC3 - DS3 OC3 - DS1* OC3 - GigE3* OC3 - GigE1*

* Requires enhanced node. For Ethernet (GigE) port options, the associated Ethernet Service must be SONET mapped.

** Enhanced nodes and concatenation are not available on Switched Access Ports

Service availability limited. Refer to # footnote on Page 23-1.

© 2022 Frontier Communications Parent, Inc. All rights reserved

23. Dedicated Ring and Optical Services (Cont'd)

23.1 Dedicated SONET Ring# (Cont'd)

(C) Service Components (Cont'd)

(2) Ports (Cont'd)

(c) Asymmetrical Ports (Cont'd)

(4) (Cont'd)

Ring Capacity	APF Rate	Asymmetrical Port Combinations**
OC192 DSR Ring	N/A	STS1 - DS3 DS3 Transmux - DS1*
	OC48	OC48 – OC12 OC48 – OC12c OC48 – OC3 OC48 – OC3c OC48 – STS1 OC48 - DS3 OC48 – DS1* OC48 – GigE24* OC48 – GigE12* OC48 – GigE9* OC48 - GigE6* OC48 - GigE3* OC48 - GigE1*
	OC12	OC12 – OC3 OC12 – OC3c OC12 – STS1 OC12 - DS3 OC12 – DS1* OC12 – GigE12* OC12 – GigE9* OC12 - GigE6* OC12 - GigE3* OC12 - GigE1*
	OC3	OC3 – STS1 OC3 - DS3 OC3 – DS1* OC3 - GigE3* OC3 - GigE1*

* Requires enhanced node. For Ethernet (GigE) port options, the associated Ethernet Service must be SONET mapped.

** Enhanced nodes and concatenation are not available on Switched Access Ports

Service availability limited. Refer to # footnote on Page 23-1.

© 2022 Frontier Communications Parent, Inc. All rights reserved

23. Dedicated Ring and Optical Services (Cont'd)

23.1 Dedicated SONET Ring# (Cont'd)

(C) Service Components (Cont'd)

(2) Ports (Cont'd)

Transmux Ports

(1) The DS3 Transmux Port performs a DS3 to DS1 conversion at an Enhanced DSR node. The DS3 to DS1 conversions allows a single DSR DS3 Transmux port to be a facility associated with up to twenty-eight (28) VT1.5 mapped DSR DS1 ports. Transmuxing is only available on an enhanced node and where suitable facilities and equipment exist to provide the DS3 Transmux Port.

(2) DS3 Transmux Ports utilize a DS3 Transmux Facility to which VT1.5 mapped DSR DS1 ports are associated. Such facility will be provisioned upon ordering the associated DS3 Transmux port.

(3) When transmuxing arrangements are ordered in symmetrical or asymmetrical port combinations, the following conditions apply:

- A DS1 port associated with a DS3 Transmux port and facility may not coexist as a separate DS1 port with the same DSR node.
- DS3 Transmux ports are available on enhanced nodes only.
- An end-to-end DS1 service provided over DSR may not be associated with more than one DS3 Transmux port or DS3 Transmux Facility.
- DS3 Transmux ports are available at premises nodes or at wire center nodes.
- When a DS3 Transmux port is utilized on an enhanced node located in a Telephone Company wire center, such port must be connected to DS3 High Capacity Service as set forth in Section 6.8.1 or 7.4.13 preceding.
- The higher speed port of an asymmetrical port combination will be mapped based on the speed of the connecting service and port.

(e) Storage Interface Ports

(1) The FICON Storage Interface Port provides an optical transport channel for transmission of 1 Gbps Fibre CONnection among mainframes, storage devices and on a single channel. A FICON signal is limited to a maximum distance of 100km (physical route kilometers) between the locations involved.

(2) The Fibre Channel Storage Interface Port provides an optical transport channel for transmission of 1 Gbps signals in a serial link between supercomputers, mainframes, workstations, desktop computers, storage devices, displays and other peripherals. A Fibre Channel signal is limited to a maximum distance of 100 km (physical route kilometers) between the locations involved.

Service availability limited. Refer to # footnote on Page 23-1.

© 2022 Frontier Communications Parent, Inc. All rights reserved

23. Dedicated Ring and Optical Services (Cont'd)

23.1 Dedicated SONET Ring# (Cont'd)

(C) Service Components (Cont'd)

(3) High Speed (Pass-Through) Interfaces

A High Speed (Pass-Through Interface applies at a mutually agreed upon location associated with partial ring DSR as set forth in (B)(2) preceding. The High Speed (Pass-Through) Interface applies in lieu of a node at such location.

(4) Mileage

(a) DSR Mileage on a full ring is the total of airline distances between nodes rounded up to the nearest mile.

(b) DSR Mileage on a partial ring is the total of airline distances between fiber meet locations (customer designated premises, wire center or mutually agreed upon pass-through location, as applicable) and each node on the partial ring. The total mileage is then rounded up to the nearest mile.

(c) The mileage rate is based on total ring capacity and not on individual services between nodes. For example, the mileage charge for a four-node OC3 ring with 5.1 miles between each node (20.4 total miles) would be calculated by multiplying the OC3 mileage rate in (L) following by 21 miles. This mileage calculation applies regardless of the number of services (e.g., DS3s) on the ring.

When DSR is provided entirely or in part over an Dedicated SONET Optical Transport Service (DSOTS) backbone network as set forth in Section 6.8.25(C)(6) or 7.2.14(C)(4) preceding, connection between the DSR nodes is provided using DSOTS optical transport channels in lieu of DSR channel mileage between the nodes.

(e) When DSR is provided entirely or in part over a Telephone Company provided DWDM ring service backbone network, DSR channel mileage will not apply between the nodes.

(5) Optional Features

Optional features are described in (K) following.

(6) Port Nodes

A port node allows interconnection between two (2) full DSR rings. One (1) of the rings will be designated as the main ring and the other ring is designated as a subtending ring. Subtending rings are described in (B)(4) preceding.

Service availability limited. Refer to # footnote on Page 23-1.

© 2022 Frontier Communications Parent, Inc. All rights reserved

23. Dedicated Ring and Optical Services (Cont'd)

23.1 Dedicated SONET Ring# (Cont'd)

Application of Rates and Charges

(1) All monthly recurring rate elements for DSRs are available for 3, 5, and 7-Year commitment periods. DSR ports and asymmetrical port facilities are also available on monthly terms. Nodes, port nodes, optional features, subtending node facilities, asymmetrical port facilities, and ports* added subsequent to the initial installation may be coterminous to the expiration date of the DSR provided the addition is prior to the 21st month for a 3-year plan, prior to the 36th month for a 5-year plan, or prior to the 50th month for a 7-Year plan. Nodes, port nodes, optional features, subtending node facilities, and asymmetrical port facilities added after the aforementioned periods require extending the commitment period for an additional one year for a 3-year plan, an additional 2 years for a 5-year plan, or an additional 3 years for a 7-Year plan. However, ports and asymmetrical port facilities in a Month-to-Month plan may be added at any time.

(2) Once a term period expires, the prevailing monthly rates of the current plan will continue until the customer cancels service or requests a new term plan.

(3) Nonrecurring Charges

(a) First and Additional Nonrecurring Charges for Ports

(1) The First Nonrecurring Charge applies to the first of each port type and speed installed at a node. The Additional Nonrecurring Charge applies for each additional port of the same type and same speed added at the same node on the same order. For example, if a customer places an order for ten (10) GigE3 Ports at the same OC48 node, one First Nonrecurring Charge and nine Additional Nonrecurring Charges will apply for the GigE3 Ports. With the exception of Storage Interface Ports, the charge will vary based on whether the installation is in connection with the initial installation of the DSR service or a subsequent installation of ports.

(2) With the exception of Storage Interface Ports, nonrecurring charges for DSR ports purchased on a month-to-month plan at the initial installation of DSR service apply on a first and additional basis.

(3) With the exception of Storage Interface Ports, nonrecurring charges for DSR ports purchased under a term plan apply on a first and additional basis for each DSR port that is ordered subsequent to the initial installation of DSR Service.

(4) For Storage Interface Ports purchased on a month-to-month basis, nonrecurring charges apply to the installation of ports on a first and additional basis regardless of whether the installation of such Storage Interface Port is in connection with the initial or subsequent installation of DSR.

(5) Changes in Month-to-Month billed ports or changes in term plan billed port nodes, are treated as disconnects and subsequent installations for which subsequent nonrecurring charges apply.

* A mix of enhanced nodes and those nodes that are not enhanced is prohibited. Ports requiring enhanced nodes may not be added to nodes that are not enhanced.

Service availability limited. Refer to # footnote on Page 23-1.

© 2022 Frontier Communications Parent, Inc. All rights reserved

23. Dedicated Ring and Optical Services (Cont'd)

23.1 Dedicated SONET Ring# (Cont'd)

Application of Rates and Charges (Cont'd)

(3) Nonrecurring Charges (Cont'd)

(b) Nonrecurring charges for DSR nodes apply to all nodes and port nodes installed subsequent to the initial installation of DSR.

(c) A Channel Mapping nonrecurring charge as set forth in (L) following applies for each channel which the Telephone Company must map over the partial ring. Channel mapping is only required on channels that originate at and terminate to devices that are not within the partial ring.

When a lower capacity service is dropped from a DSR Ring, the associated ports will be billed to the lower capacity service. Lower capacity services may not be dropped at locations utilizing a pass-through interface. However, a Channel Mapping Charge will apply for each lower capacity service that originates at and terminates to devices that are not within the partial ring provided by the Telephone Company. The Channel Mapping Charge is billed to the lower capacity service.

(e) When a lower capacity service is provided between two (2) separate asymmetric port facilities (APF) on the same DSR, the Telephone Company must map the facility assignment on the first APF to the facility assignment on the second APF for which an Asymmetrical Port Mapping Nonrecurring Charge applies per lower capacity service mapped.

(f) Nonrecurring charges apply for the installation of an Optional Feature as described in (K)(1) and (K)(2) following.

(g) A single Dual Node Cross-connect Charge applies per lower level service provided across the interconnecting port nodes of a subtending ring(s) configuration, regardless of the number of subtending rings involved. Dual Node Cross-connect Charges as set forth in (L) following apply for each channel which the Telephone Company must cross-connect between the port nodes of the interconnecting ring(s).

Service availability limited. Refer to # footnote on Page 23-1.

© 2022 Frontier Communications Parent, Inc. All rights reserved

23. Dedicated Ring and Optical Services (Cont'd)

23.1 Dedicated SONET Ring# (Cont'd)

Application of Rates and Charges (Cont'd)

(4) When a node is disconnected prior to the end of the commitment period, the node is subject to termination liability under (E)(1) following.

(5) Changes from OC12 to OC12/3 and OC12/3 to OC12 Nodes are treated as upgrades. Subsequent installation nonrecurring charges are applicable.

(6) Where an Ethernet, Fibre Channel, or FICON signal is mapped to a SONET service, and that SONET service is provided in a symmetrical port arrangement, two (2) OCn ports apply (one where the mapped signal enters the ring and one where the mapped signal exits the ring).

(7) Where one or more Ethernet, Fibre Channel or FICON signals are mapped to a SONET service, and that SONET service utilizes an asymmetrical port combination (e.g., the signals enter the ring mapped to an OC12 SONET service and exit the ring via an OC48 port associated with an asymmetrical port facility), only one OCn port applies per mapped signal to enter the ring and the signal exits the ring over the asymmetrical port facility. The total number of such mapped Ethernet, Fibre Channel, or FICON signals that can be associated with the OCn Port of the asymmetrical port facility is limited by the STS1 capacity required to map each signal into the SONET service. For example, assume that an OC48 APF is ordered for which an OC48 port, OC48 mileage, and, when applicable, an OC48 Extension applies (an OC48 has a capacity of 48 STS1s). Further assume that 2 Ethernet Private Line 600 Mbps Ethernet-to-SONET mapped services are ordered, each of which requires 6 STS1s when mapped into an OC12 SONET signal. In this example, the OC48 asymmetrical port arrangement would still have 36 available STS1s.

(8) Changes in Month-to-Month billed asymmetrical port facilities are treated as disconnects and subsequent installations.

Service availability limited. Refer to # footnote on Page 23-1.

© 2022 Frontier Communications Parent, Inc. All rights reserved

23. Dedicated Ring and Optical Services (Cont'd)

23.1 Dedicated SONET Ring# (Cont'd)

(E) Termination Liability

(1) Unless otherwise set forth in this Section (E), termination liability applies when DSR service or an Optional Feature is terminated prior to the end of the applicable commitment term. Termination liability is charged per monthly rate element on all nodes, port nodes, high speed (pass-through) interfaces, optional features, subtending node facilities or asymmetrical port facilities, and ports (other than Month-to-Month billed ports for which the one month minimum service charge applies).

(2) A separate termination liability charge is assessed for each rate element associated with the disconnected DSR service or an Optional Feature. For example, assume that the customer subscribes to a full DSR ring that is arranged with the Direct TL1 Monitoring Optional Feature, as set forth in (K)(2) following. Further assume that the customer disconnects the DSR ring along with the Direct TL1 Monitoring Optional Feature prior to the end of the commitment term. Then, the customer shall pay termination liability on the nodes, ports, and the Direct TL1 Monitoring Optional Feature monthly recurring rate elements as set forth in this section.

(3) Reserved For Future Use. (C)

(4) Termination liability will not apply on any DSR service or Optional Feature if a customer changes to a longer term commitment period for such service.

Service availability limited. Refer to # footnote on Page 23-1.

© 2024 Frontier Communications Parent, Inc. All rights reserved

23. Dedicated Ring and Optical Services (Cont'd)

23.1 Dedicated SONET Ring# (Cont'd)

(E) Termination Liability (Cont'd)

(5) Termination liability will not apply to a customer upgrade (change to a higher capacity DSR service), if all of the following conditions are met. These conditions do not apply to Optional Features.

(a) A new commitment period commences with the upgrade.
(b) The new expiration date extends beyond the discontinued plan date.
(c) The upgrade consists of either one (1) existing DSR service being upgraded into a higher capacity DSR service or two (2) existing DSR services being upgraded into a single, higher capacity DSR service.
The new DSR service has at least one customer premises Node and one CO Node in common with the discontinued service(s).
(e) When two (2) existing DSR services are being upgraded into a single, higher capacity DSR service, the aggregate amount of all monthly charges for the nodes and ports included under the new commitment period is at least 25% greater than the aggregate amount of the monthly charges remaining in the commitment period for the nodes and ports being disconnected.

For illustrative purposes, assume the following:

- Customer has 2 separate OC3 DSR services
- One OC3 DSR is in its twenty-fourth (24th) month of a 3-year term plan (i.e., 12 months remain in the term commitment period) and is configured with 3 nodes and 6 ports (Ring A)
- The other OC3 DSR is in its twenty-first (21st) month of a 3-year term plan (i.e., 15 months remain in the term commitment period) and is configured with 3 nodes and 6 ports (Ring B)
- The customer is upgrading Rings A & B to a single OC12 DSR with a term plan of 3 years that is to be configured with 3 nodes and 6 ports (Ring C)

Based on the above assumptions, the following calculations are used to determine if the aggregate amount of monthly charges for the commitment period of Ring C is greater than the combined aggregate amount of monthly charges for the remainder of the commitment periods on Rings A & B and therefore, whether or not termination liability will apply to Rings A & B for the upgrade.

Step 1 – Determine the amount of monthly charges remaining on Ring A for the balance of the term commitment by multiplying the monthly rates for the 3 nodes and 6 ports (assume $4680 per month) by the 12 months remaining in the term commitment = $56,160.

Step 2 - Determine the amount of monthly charges remaining on Ring B for the balance of the term commitment by multiplying the monthly rates for the 3 nodes and 6 ports (assume $4680 per month) by the 15 months remaining in the term commitment = $70,200.

Service availability limited. Refer to # footnote on Page 23-1.

© 2022 Frontier Communications Parent, Inc. All rights reserved

23. Dedicated Ring and Optical Services (Cont'd)

23.1 Dedicated SONET Ring# (Cont'd)

(E) Termination Liability (Cont'd)

(5) (Cont'd)

Step 3 – Determine the combined aggregate amount of monthly charges remaining for Rings A & B by summing the amounts determined in Steps 1 and 2 ($56,160 + $70,200 = $126,360).

Step 4 – Determine the aggregate amount of monthly charges associated with Ring C by multiplying the monthly rates (assume $9390) by 36 months for the term commitment = $338,040.

Step 5 – Determine the difference between the monthly charges for the existing service and the monthly charges for the upgraded service by subtracting the combined aggregate amount determined in Step 3 from the aggregate amount determined in Step 4 ($338,040 - $126,360 = $211,680).

Step 6 - Divide the result obtained in Step 5 by the aggregate amount determined in Step 3 ($211,680/$126,360 = 1.675). Convert the decimal amount to a percentage by multiplying by 100 (1.675 x 100 = 167.5%).

If the result is equal to or greater than 25%, then the upgrade occurs without the application of termination liability on Rings A & B. If the result is less than 25%, termination liability applies to Rings A & B in accordance with this Section (E). Standard rounding rules apply. For this example, the result is 167.5%; therefore, termination liability does not apply.

Additional nodes and ports added at the time of the upgrade incur all applicable rates.

(f) Termination liability will apply when none of the conditions above are met and the customer cancels service prior to expiration of the plan period. If the cancellation occurs within the first two years of a term plan, termination liability is equal to 100 percent of the monthly charges for the unexpired portion of the first two years, and 25 percent of the monthly charges for the remainder of the plan. If the customer cancels after the first two years of service, then termination liability is equal to 25 percent of the monthly charges for the remaining life of the term.

(g) For Dedicated SONET Ring (DSR) with a commitment period which was extended under (I) following, termination liability is calculated as the difference between the monthly rates for the highest Term Pricing Plan commitment period that could have been satisfied prior to disconnection of the service or cancellation of the plan and the monthly rates already paid for the expired commitment period and the extended commitment period for the period of time the service was in effect.

Service availability limited. Refer to # footnote on Page 23-1.

© 2022 Frontier Communications Parent, Inc. All rights reserved

23. Dedicated Ring and Optical Services (Cont'd)

23.1 Dedicated SONET Ring# (Cont'd)

(F) Conversions

Customers who wish to move or convert existing High Capacity Special Access Services to a DSR may do so without conversion charges (termination liability and installation charges) as long as the total capacity of Special Access Services purchased by the customer does not decrease.

(G) Deployment and Availability

Since DSR service provides a dedicated high capacity customized network, it is deployed upon customer request. Where SONET facilities are not generally available, rates and charges as set forth in Interstate Special Construction Tariffs may apply.

DSR is available based on negotiated intervals as described in 5.2.1(B) preceding.

(H) Shared Use

(1) Shared use is permitted whenever Special Access and Switched Access are provided over the same DSR. At least one channel of a service (e.g., DS1 or DS3) on the ring must be Special Access for the service to be billed as Special Access.

(2) The node, mileage and port rate elements are reduced (ratcheted) to offset the Switched Access charges for the entrance facility, and mileage. Two separate reduction ratios are used. The reduction ratio for the node and mileage charges is calculated by dividing the number of switched DS0 equivalents in use on the DSR by the total DS0 equivalent quantities for the ring; see the table below.

Ring Type	DS3 Quantities	DS1 Quantities	DS0 Quantities
OC3	3	84	2,016
OC12	12	336	8,064
OC48	48	1,344	32,256
OC192	192	5,376	129,024

(3) The reduction ratio for the port charge is calculated by dividing the number of switched DS0 equivalents in use on the channelized services on the DSR (the lower speed services on the ring) by the total number of DS0 equivalents that are in use on the channelized services on the DSR.

(4) If the DSR is used to route Switched Access traffic between Telephone Company Wire Centers, then Switched Access Direct Trunk Transport rates are also applied.

(5) Shared Use and Switched Access Services are prohibited on DSR partial ring configurations.

Service availability limited. Refer to # footnote on Page 23-1.

© 2022 Frontier Communications Parent, Inc. All rights reserved

23. Dedicated Ring and Optical Services (Cont'd)

23.1 Dedicated SONET Ring# (Cont'd)

(I) Extension of a Commitment Period

(1) For Dedicated SONET Ring (DSR), the customer also has the option, within sixty (60) days prior to the expiration date for its commitment period, to extend its expiring Term Pricing Plan to a plan with a longer commitment period, for which time-in-service credit will be allowed for the expiring plan. The commitment period selected for the extended plan must be longer that the commitment period of the expiring plan as follows:

- An expiring 3-Year Term may be extended to either a 5-Year or 7-Year Term Plan.
- An expiring 5-Year Term may be extended to a 7-Year Term Plan.

(2) Time-in-service credit on the expiring plan will be granted and applied towards the new extended plan. For example, an expiring 3-Year term plan will allow for 3 years of time-in-service credit towards the extended plan.

(3) The discount percentage associated with the extended plan will apply effective with the first bill day following expiration of the commitment period for the existing plan and continue through the remainder of the commitment period associated with the extended plan. No adjustment for the increased discount percentage associated with the extended plan will be made to the monthly rates already billed on the expiring plan.

(J) Reserved

Service availability limited. Refer to # footnote on Page 23-1.

© 2022 Frontier Communications Parent, Inc. All rights reserved

23. Dedicated Ring and Optical Services (Cont'd)

23.1 Dedicated SONET Ring# (Cont'd)

(K) Optional Features

The customer has the option of purchasing one of the following Optional Features for use with Special Access DSR service provided by the Telephone Company in accordance with this Section 23.1. Only one of these Optional Features may be provided on a single DSR service. In order to purchase one of the Optional Features, the customer must be subscribed to a DSR service and must use such DSR service in conjunction with the selected Optional Feature.

- Customer Service Management Optional Feature, as set forth in (K)(1) following
- Direct TL1 Monitoring Optional Feature, as set forth in (K)(2) following

(1) Customer Service Management Optional Feature (**CSM**)

(a) Description

CSM provides a customer with real-time information about the operational status of its DSR network and the ability to reconfigure lower level services riding the DSR ring. Three (3) Service Levels of support are offered for CSM. Each Service Level provides different functionalities to which the customer may gain access. These functionalities are described following and include access to real-time information about the customer's DSR network, the ability to generate reports, and the ability to reconfigure lower level services riding the DSR ring. When ordering CSM, the customer must specify the level of CSM support as one of the following three (3) Service Levels.

(1) Level 1 support provides a network view of real-time detection and reporting of network alarm conditions within the customer's DSR network.

(2) Level 2 support provides the same support described in Level 1 along with the ability for the customer to generate basic network performance reports for its DSR network. The customer may also request network performance reports that are customized to meet their specific needs.

(3) Level 3 support provides the same support described in Levels 1 and 2 along with the ability to reconfigure (re-map) the end points of lower level services riding the ring.

(a) Reconfiguration using CSM consists of re-mapping the end point of a primary circuit to its preplanned (backup) port location. The customer must specify a preplanned port location for each primary circuit installed. The preplanned port location is a backup location that is activated and de-activated when a primary circuit is reconfigured at the request of the customer via the CSM platform. A reconfiguration is limited to the mapping of one primary circuit to its assigned preplanned location. For each preplanned port location, a monthly recurring rate and a nonrecurring installation charge apply per port in accordance with (K)(1)(b) following. When the primary circuit and preplanned port are part of a Shared Network Arrangement, the Service User's Letter of Authorization for the Shared Network Arrangement (as set forth in Section 5.2 preceding) must include an acknowledgment that the Host Customer has the ability to perform CSM functions (e.g., reconfiguration) on the portion of the Service User's service that rides the DSR.

Service availability limited. Refer to # footnote on Page 23-1.

© 2022 Frontier Communications Parent, Inc. All rights reserved

23. Dedicated Ring and Optical Services (Cont'd)

23.1 Dedicated SONET Ring# (Cont'd)

(K) Optional Features (Cont'd)

(1) Customer Service Management Optional Feature (**CSM**) (Cont'd)

(a) Description (Cont'd)

(3) (Cont'd)

(b) A Telephone Company Performed Reconfiguration charge, as described in (K)(1)(b) following, will apply when the customer requests that the Telephone Company perform a reconfiguration of service on its behalf. This charge does not apply when a customer performs its own service reconfiguration.

(c) Reconfiguration is not permitted on services arranged in the following service configurations:

(i) Switched Access Service;
(ii) service provided under a shared use arrangement;
(iii) service associated with Centrex-CO or Primary Rate ISDN service;
(iv) primary circuits for which the customer has not specified a preplanned backup location; or
(v) Fibre Channel/FICON service.

The type of nodes deployed within the DSR network may limit reconfiguration of OC12/OC12c circuits within an OC48 DSR. CSM is not available on partial ring configurations.

(e) When CSM is added to an existing ring, existing circuits that are being made reconfigurable will require that an Access Order be issued to designate the circuit as reconfigurable. Nonrecurring charges as set forth in Section 5 preceding may apply. The Telephone Company's ability to provide CSM on a particular ring may be limited by the overall configuration of that ring. Reconfiguration is limited to those circuits that originate and/or terminate on the ring (i.e., at locations served by a node on the ring) and utilize ports that are symmetrical. For circuits that originate or terminate off the ring (i.e., at locations not served by a node on the ring), the reconfiguration is limited to customer premises node locations on the ring.

Service availability limited. Refer to # footnote on Page 23-1.

© 2022 Frontier Communications Parent, Inc. All rights reserved

23. Dedicated Ring and Optical Services (Cont'd)

23.1 Dedicated SONET Ring# (Cont'd)

(K) Optional Features (Cont'd)

(1) Customer Service Management Optional Feature (**CSM**) (Cont'd)

(b) Rate Regulations

CSM rates and charges are set forth in (L) following, unless noted otherwise. CSM rates and charges apply in addition to any applicable DSR rates and charges as described in preceding. Unless otherwise indicated below, CSM rates and charges apply regardless of the Service Level selected by the customer.

(1) Monthly Recurring Rates

(a) A CSM Service Level rate applies for each DSR ring provided with CSM.

(b) For customers subscribing to Service Level 3 support, a Preplanned Port rate, as set forth in (L) following, applies for each preplanned port location established.

(2) Nonrecurring Charges

(a) A Node Setup charge applies for each node that is equipped with CSM at the time that CSM is initially established on the ring.

(b) An Add/Remove Node charge applies for each node that is subsequently added to, or removed from, a ring that has already been equipped to provide CSM.

(c) An Initial CSM Setup charge applies for establishment of the customer's initial CSM database partition. The initial CSM database partition includes setup for up to six (6) users.

A Setup of Additional Users charge applies for the setup of up to six (6) additional users beyond those provided with the initial database setup when CSM is initially established on the ring.

(e) A Setup of Additional Partition or Change in CSM Service Level charge applies for the setup of an additional CSM database partition created for the same customer or to change from one CSM service level to another (e.g., change Service Level 2 to Service Level 3). Each additional CSM database provides for the setup of up to six (6) additional users.

(f) A Consultation and Support charge applies for each thirty (30) minutes or fraction thereof that the customer requests Telephone Company consultation and support of its CSM network. This charge does not apply during initial setup of CSM on the ring.

Service availability limited. Refer to # footnote on Page 23-1.

© 2022 Frontier Communications Parent, Inc. All rights reserved

23. Dedicated Ring and Optical Services (Cont'd)

23.1 Dedicated SONET Ring# (Cont'd)

(K) Optional Features (Cont'd)

(1) Customer Service Management Optional Feature (**CSM**) (Cont'd)

(b) Rate Regulations (Cont'd)

(2) Nonrecurring Charges (Cont'd)

(g) A Telephone Company Performed Reconfiguration charge applies for Service Level 3 customers only when the customer requests that the Telephone Company perform a reconfiguration based on its pre-mapping instructions.

(h) A Preplanned Port charge, as set forth in (L) following, applies for Service Level 3 customers only for each port associated with a preplanned location that is established during the initial establishment of CSM on the ring.

(c) Terms and Conditions

(1) The customer must utilize Internet web access to connect its customer-provided terminal equipment to the Telephone Company's CSM management system. Access to the Internet and any associated rates and charges are the responsibility of the customer. The customer is also responsible for obtaining communications software that is compatible with the software the Telephone Company utilizes to provide CSM. The Telephone Company will work cooperatively with the customer to determine compatibility of its communications software.

(2) CSM is provided only when the Telephone Company provides all nodes on the ring.

(3) Subject to the restrictions set forth in (K)(1)(c)(4) following, CSM is provided coincident with the installation of the associated DSR ring or may be added to an existing ring. The customer will be responsible for the rates and charges set forth in (K)(1)(b) preceding.

Service availability limited. Refer to # footnote on Page 23-1.

© 2022 Frontier Communications Parent, Inc. All rights reserved

23. Dedicated Ring and Optical Services (Cont'd)

23.1 Dedicated SONET Ring# (Cont'd)

(K) Optional Features (Cont'd)

(1) Customer Service Management Optional Feature (**CSM**) (Cont'd)

(c) Terms and Conditions (Cont'd)

(4) CSM Service Level is provided under a term plan of 3 years, 5 years, or 7 years, as described following.

(a) The duration of the term plan for CSM Service Level must be the same duration as the term plan for the DSR nodes provided with CSM. The customer has the option of subscribing to Preplanned Ports on a month-to-month basis or under a term plan of 3, 5, or 7 years. At the expiration of its 3, 5, or 7 year term plans for CSM Service Levels or Preplanned Ports, the customer has the option of extending CSM Service Level or Preplanned Ports with a coterminous end date as described in (K)(1)(c)(4)(b) following.

(b) The expiration date of each CSM Service Level added subsequent to the initial installation must be coterminous to the expiration date of the associated DSR service, provided that the addition is prior to the 21st month for a 3-year plan, prior to the 36th month for a 5-year plan, or prior to the 50th month for a 7-Year plan. A CSM added after the aforementioned periods requires extension of the commitment period for the associated DSR service in accordance with (I) preceding. Such extension results in the establishment of a new plan that includes both the DSR and the CSM under the same plan with the same expiration date.

(5) With Service Level 2 or 3 support, the customer may retrieve certain basic reports containing performance-monitoring information on its DSR network, as designated and provided by the Telephone Company. Basic reports are available at no additional charge to the customer. The customer may also request that a report be customized to meet its particular needs. Rates and charges for customized reports are provided on an individual case basis (**ICB**) only. Reports are not provided with Level 1 support.

(6) CSM is subject to termination liability if CSM is removed prior to completion of the existing commitment period. The terms and conditions in (E) preceding, as applicable, apply to removal of CSM prior to completion of the existing commitment period.

(7) When the Shared Network Arrangement is requested for a service that will be part of the Host Customer's DSR equipped with the CSM optional feature, the Service User's Letter of Authorization for the Shared Network Arrangement (as required under Section 5.2 preceding) must include an acknowledgment that the Host Customer has the ability to perform CSM functions (e.g., reconfiguration) on the portion of the Service User's service that rides the DSR.

Service availability limited. Refer to # footnote on Page 23-1.

© 2022 Frontier Communications Parent, Inc. All rights reserved

23. Dedicated Ring and Optical Services (Cont'd)

23.1 Dedicated SONET Ring# (Cont'd)

(K) Optional Features (Cont'd)

(2) Direct TL1 Monitoring Optional Feature (DTM)

(a) Description

Direct Transaction Language 1 (**TL1**) Monitoring Optional Feature (**DTM**) provides a customer with near real-time information about the operational status of its DSR network over a TL1 connection. A TL1 connection is a machine-to-machine communication language protocol. The connection allows a customer to monitor its DSR network via a limited set of executable TL1 commands in order to query alarm and performance criteria.

(1) DTM enables the following:

(a) Near real-time access to system-generated alarm and performance messages originating from the customer's DSR network elements.

(b) Query and response capability that enables two-way communications with the capability to poll and retrieve messages, such as command alarms and performance messages.

(c) Access to DSR ring inventory information that will enable the customer to maintain its own inventory database containing network element configurations and usage records for active service channels.

Notification that a power failure has occurred at a DSR network element and that the affected network element has reverted to battery backup.

(e) Ability to monitor the ring, as well as all service channels riding the ring. When a channel riding the ring is part of a Shared Network Arrangement, the Service User's Letter of Authorization for the Shared Network Arrangement (as required under Section 5.2 preceding) must include an acknowledgment that the Host Customer has the ability to perform DTM functions (e.g., monitoring) on the portion of the Service User's service that rides the DSR.

Service availability limited. Refer to # footnote on Page 23-1.

© 2022 Frontier Communications Parent, Inc. All rights reserved

23. Dedicated Ring and Optical Services (Cont'd)

23.1 Dedicated SONET Ring# (Cont'd)

(K) Optional Features (Cont'd)

(2) Direct TL1 Monitoring Optional Feature (DTM) (Cont'd)

(b) Rate Regulations

DTM rates and charges are set forth in (L) following and apply in addition to any applicable DSR rates and charges as described in preceding.

(1) Monthly Recurring Rates

A DTM rate applies for each DSR ring provided with DTM.

(2) Nonrecurring Charges

(a) A Node Setup charge applies for each node that is equipped with DTM at the time that DTM is initially established on the ring.

(b) An Add/Remove Node charge applies for each node that is subsequently added to, or removed from, a ring that has already been equipped to provide DTM.

(c) An Initial DTM Setup charge applies for establishment of the customer's initial DTM database partition.

A Consultation and Support charge applies for each thirty (30) minutes or fraction thereof that the customer requests Telephone Company consultation and support of its DTM network. This charge does not apply during initial setup of DTM on the ring.

Service availability limited. Refer to # footnote on Page 23-1.

© 2022 Frontier Communications Parent, Inc. All rights reserved

23. Dedicated Ring and Optical Services (Cont'd)

23.1 Dedicated SONET Ring# (Cont'd)

(K) Optional Features (Cont'd)

(2) Direct TL1 Monitoring Optional Feature (DTM) (Cont'd)

(c) Terms and Conditions

(1) Subject to the restrictions set forth in this Section (K)(2)(c), DTM is provided coincident with the installation of the associated DSR ring or may be added to an existing ring. The customer will be responsible for the rates and charges set forth in (K)(2)(b) preceding.

(2) The customer must order two (2) Special Access Services as provided by the Telephone Company under Section 7 preceding in order to ensure secure, dedicated private line access and enable full redundancy for DTM. These Special Access Lines must originate at the customer's designated premises and terminate at a DTM site designated by the Telephone Company. Special Access Services will only be provided in accordance with the terms and conditions of this Guide. The customer is responsible for procuring any additional services that may be necessary to connect the Special Access Services to the customer's designated premises.

(3) When requested by the customer, and where technically feasible to do so, the Telephone Company will provide encryption capabilities on the Special Access Services used to access DTM. The Telephone Company will specify any equipment or software required to provide encryption. Obtaining such equipment or software is the responsibility of the customer. The customer is also responsible for:

(i) security of any equipment, servers, systems, or other facilities provided by the customer and which have access to the DTM network; and
(ii) monitoring access to the DTM service using the facilities, systems, equipment, or servers provided by the customers.

(4) DTM is only provided when the Telephone Company provides all the nodes on the ring. DTM is not available on partial ring configurations.

(5) The monthly recurring charges for DTM are provided under a term plan of 3 years, 5 years, or 7 years. The duration of the term plan for DTM must be the same duration as the term plan for the DSR nodes.

(6) The expiration date of each DTM added subsequent to the initial installation must be coterminous to the expiration date of the associated DSR service, provided that the addition of DTM is prior to the 21st month for a 3-year plan, prior to the 36th month for a 5-year plan, or prior to the 50th month for a 7-Year plan. A DTM added after the aforementioned periods requires extension of the commitment period for the associated DSR service in accordance with (I) preceding. Such extension results in the establishment of a new plan that includes both the DSR and DTM under the same plan with the same expiration date.

(7) Termination liability will apply if DTM is removed prior to completion of the existing commitment period. The terms and conditions in (E) preceding, as applicable, will apply.

Service availability limited. Refer to # footnote on Page 23-1.

© 2022 Frontier Communications Parent, Inc. All rights reserved

23. Dedicated Ring and Optical Services (Cont'd)

23.1 Dedicated SONET Ring# (Cont'd)

(L) Rates and Charges

(1) Nodes

(A) Monthly Rates, Per Node

(1) Switched Access

Node Type	3-Year Term*	5-Year Term*	7-Year Term*

* 3-year, 5-year and 7-year term plans are not available in West Virginia.

(2) Special Access

Node Type	3-Year Term	5-Year Term	7-Year Term
OC3			
N-MSA	$2,228.00	$1,290.00	$1,186.00
Price Band 4	2,228.00	1,290.00	1,186.00
Price Band 5	2,228.00	1,290.00	1,186.00
Price Band 6	2,228.00	1,290.00	1,186.00
Enhanced OC3			
N-MSA	2,228.00	1,290.00	1,186.00
OC12/3			
N-MSA	3,837.00	2,132.00	1,918.00
Price Band 4	3,837.00	2,132.00	1,918.00
Price Band 5	3,837.00	2,132.00	1,918.00
Price Band 6	3,837.00	2,132.00	1,918.00
OC12			
N-MSA	2,768.00	2,050.00	1,975.00
Price Band 4	3,943.00	2,238.00	2,015.00
Price Band 5	3,943.00	2,238.00	2,015.00
Price Band 6	3,943.00	2,238.00	2,015.00
Enhanced OC12			
N-MSA	4,860.00	2,700.00	2,430.00
Price Band 4	4,860.00	2,700.00	2,430.00
Price Band 5	4,860.00	2,700.00	2,430.00
Price Band 6	4,860.00	2,700.00	2,430.00

Service availability limited. Refer to # footnote on Page 23-1.

© 2022 Frontier Communications Parent, Inc. All rights reserved

23. Dedicated Ring and Optical Services (Cont'd)

23.1 Dedicated SONET Ring# (Cont'd)

(L) Rates and Charges (Cont'd)

(1) Nodes (Cont'd)

(A) Monthly Rates, Per Node (Cont'd)

OC48			
N-MSA	5,717.00	4,235.00	4,050.00
Price Band 4	10,658.00	4,604.00	4,143.00
Price Band 5	10,658.00	4,604.00	4,143.00
Price Band 6	10,658.00	4,604.00	4,143.00
Enhanced OC48			
N-MSA	10,658.00	4,604.00	4,143.00
Price Band 4	10,658.00	4,604.00	4,143.00
Price Band 5	10,658.00	4,604.00	4,143.00
Price Band 6	10,658.00	4,604.00	4,143.00
OC192			
N-MSA	15,525.00	11,500.00	10,350.00
Price Band 4	20,700.00	11,500.00	10,350.00
Price Band 5	20,700.00	11,500.00	10,350.00
Price Band 6	20,700.00	11,500.00	10,350.00
Enhanced OC192			
4,050.00			
N-MSA	$16,560.00	$9,200.00	$8,280.00
Price Band 4	16,560.00	9,200.00	8,280.00
Price Band 5	16,560.00	9,200.00	8,280.00
Price Band 6	16,560.00	9,200.00	8,280.00

Service availability limited. Refer to # footnote on Page 23-1.

© 2022 Frontier Communications Parent, Inc. All rights reserved

23. Dedicated Ring and Optical Services (Cont'd)

23.1 Dedicated SONET Ring# (Cont'd)

(L) Rates and Charges (Cont'd)

(1) Nodes (Cont'd)

(B) Nonrecurring Charges

(1) Subsequent Installation, Per Node or Port Node

	Nonrecurring Charge
(a) Switched Access*	
OC3, OC12, OC48, or OC192	$1,599.00
(b) Special Access	
OC3, OC12, OC48, or OC192	
N-MSA	1,599.00
Price Band 4	1,599.00
Price Band 5	1,599.00
Price Band 6	1,599.00

* 3-year, 5-year and 7-year term plans are not available in West Virginia.

Service availability limited. Refer to # footnote on Page 23-1.

© 2022 Frontier Communications Parent, Inc. All rights reserved

23. Dedicated Ring and Optical Services (Cont'd)

23.1 Dedicated SONET Ring# (Cont'd)

(L) Rates and Charges (Cont'd)

(2) Mileage, Per Mile Between Nodes

(a) Switched Access

Ring Type	USOC	3-Year Term*	5-Year Term*	7-Year Term*

* 3-year, 5-year and 7-year term plans are not available in West Virginia.

(b) Special Access

Ring Type	3-Year Term	5-Year Term	7-Year Term
OC3			
N-MSA	$352.00	$235.00	$223.00
Price Band 4	352.00	235.00	223.00
Price Band 5	352.00	235.00	223.00
Price Band 6	352.00	235.00	223.00
OC12			
N-MSA	400.00	310.00	300.00
Price Band 4	671.00	359.00	341.00
Price Band 5	671.00	359.00	341.00
Price Band 6	671.00	359.00	341.00
OC48			
N-MSA	625.00	450.00	400.00
Price Band 4	1,279.00	639.00	607.00
Price Band 5	1,279.00	639.00	607.00
Price Band 6	1,279.00	639.00	607.00
OC192			
N-MSA	1,215.00	900.00	850.00
Price Band 4	2,559.00	1,279.00	1,215.00
Price Band 5	2,559.00	1,279.00	1,215.00
Price Band 6	2,559.00	1,279.00	1,215.00

Service availability limited. Refer to # footnote on Page 23-1.

© 2022 Frontier Communications Parent, Inc. All rights reserved

23. Dedicated Ring and Optical Services (Cont'd)

23.1 Dedicated SONET Ring# (Cont'd)

(L) Rates and Charges (Cont'd)

(3) Ports

(a) Monthly Rates, Per Port

(1) Switched Access

Port Type	M-to-M	3-Year Term*	5-Year Term*
DS1 at OC3 or OC12/3 Node	$ 28.00		
DS1 at OC12 Node#	28.00		
DS1 at OC48 Node#	28.00		
DS1 at OC192 Node#	115.00		
DS3 or STS1 at OC3 or OC12/3 Node	115.00		
DS3 or STS1 at OC12 Node	115.00		
DS3 or STS1 at OC48 Node	115.00		
DS3 or STS1 at OC192 Node	115.000		
DS3 Transmux at OC3#	400.00		
DS3 Transmux at OC12#	400.00		
DS3 Transmux at OC48#	400.00		
DS3 Transmux at OC192#	400.00		

* 3, 5 and 7-year term plans are not available in West Virginia.
# Requires an enhanced node.

Service availability limited. Refer to # footnote on Page 23-1.

© 2022 Frontier Communications Parent, Inc. All rights reserved

23. Dedicated Ring and Optical Services (Cont'd)

23.1 Dedicated SONET Ring# (Cont'd)

(L) Rates and Charges (Cont'd)

(3) Ports (Cont'd)

(a) Monthly Rates, Per Port (Cont'd)

(1) Switched Access (Cont'd)

Port Type	M-to-M	3-Year Term*	5-Year Term*	7-Year Term***
OC3 at OC12 Node	$250.00			
OC3 at OC48 Node	250.00			
OC3 at OC192 Node	250.00			
OC12 at OC48 Node	500.00			
OC12 at 0C192 Node	500.00			
OC48 at OC192 Node	1,200.00			

* 3, 5 and 7-year term plans are not available in West Virginia.
** Ports with 7-year term plans are only available when used in the provision of asymmetrical port facilities or subtending node facilities which are under a 7-year term plan.

Service availability limited. Refer to # footnote on Page 23-1.

© 2022 Frontier Communications Parent, Inc. All rights reserved

23. Dedicated Ring and Optical Services (Cont'd)

23.1 Dedicated SONET Ring# (Cont'd)

(L) Rates and Charges (Cont'd)

(3) Ports (Cont'd)

(a) Monthly Rates, Per Port (Cont'd)

(2) Special Access

Port Type	M-to-M	3-Year Term	5-Year Term
DS1 at OC3 or OC12/3 Node			
Price Band 4	28.00	28.00	28.00
Price Band 5	28.00	28.00	28.00
Price Band 6	28.00	28.00	28.00
DS1 at OC12 Node*			
Price Band 4	28.00	28.00	28.00
Price Band 5	28.00	28.00	28.00
Price Band 6	28.00	28.00	28.00
DS1 at OC48 Node*			
Price Band 4	28.00	28.00	28.00
Price Band 5	28.00	28.00	28.00
Price Band 6	28.00	28.00	28.00
DS1 at OC192 Node*			
Price Band 4	28.00	28.00	28.00
Price Band 5	28.00	28.00	28.00
Price Band 6	28.00	28.00	28.00
DS3 or STS1 at OC3, or OC3/12 Node			
Price Band 4	143.00	115.00	115.00
Price Band 5	143.00	115.00	115.00
Price Band 6	143.00	115.00	115.00
DS3 or STS1 at OC12 Node			
Price Band 4	115.00	115.00	115.00
Price Band 5	115.00	115.00	115.00
Price Band 6	115.00	115.00	115.00
DS3 or STS1 at OC48 Node			
Price Band 4	115.00	115.00	115.00
Price Band 5	115.00	115.00	115.00
Price Band 6	115.00	115.00	115.00

* Requires enhanced node.

Service availability limited. Refer to # footnote on Page 23-1.

© 2022 Frontier Communications Parent, Inc. All rights reserved

23. Dedicated Ring and Optical Services (Cont'd)

23.1 Dedicated SONET Ring# (Cont'd)

(L) Rates and Charges (Cont'd)

(3) Ports (Cont'd)

(a) Monthly Rates, Per Port (Cont'd)

(2) Special Access (Cont'd)

Port Type	M-to-M	3-Year Term	5-Year Term
DS3 or STS1 at OC192 Node			
Price Band 4	115.00	115.00	115.00
Price Band 5	115.00	115.00	115.00
Price Band 6	115.00	115.00	115.00
DS3 Transmux at OC3 Node*			
Price Band 4	400.00	400.00	400.00
Price Band 5	400.00	400.00	400.00
Price Band 6	400.00	400.00	400.00
DS3 Transmux at OC12 Node*			
Price Band 4	400.00	400.00	400.00
Price Band 5	400.00	400.00	400.00
Price Band 6	400.00	400.00	400.00
DS3 Transmux at OC48 Node*			
Price Band 4	400.00	400.00	400.00
Price Band 5	400.00	400.00	400.00
Price Band 6	400.00	400.00	400.00
DS3 Transmux at OC192 Node*			
Price Band 4	400.00	400.00	400.00
Price Band 5	400.00	400.00	400.00
Price Band 6	400.00	400.00	400.00

* Requires an Enhanced Node.

Service availability limited. Refer to # footnote on Page 23-1.

© 2022 Frontier Communications Parent, Inc. All rights reserved

23. Dedicated Ring and Optical Services (Cont'd)

23.1 Dedicated SONET Ring# (Cont'd)

(L) Rates and Charges (Cont'd)

(3) Ports (Cont'd)

(a) Monthly Rates, Per Port (Cont'd)

(2) Special Access (Cont'd)

Port Type	M-to-M	3-Year Term	5-Year Term	7-Year Term**
OC3 at OC12 Node				
N-MSA	250.00	250.00	250.00	$250.00
Price Band 4	343.00	343.00	343.00	
Price Band 5	343.00	343.00	343.00	
Price Band 6	343.00	343.00	343.00	
OC3 at OC48 Node				
N-MSA	250.00	250.00	250.00	250.00
Price Band 4	343.00	343.00	343.00	
Price Band 5	343.00	343.00	343.00	
Price Band 6	343.00	343.00	343.00	
OC3 at OC192 Node				
N-MSA	250.00	250.00	250.00	250.00
Price Band 4	343.00	343.00	343.00	
Price Band 5	343.00	343.00	343.00	
Price Band 6	343.00	343.00	343.00	
OC3c at OC12 Node				
N-MSA	$250.00	$250.00	$250.00	
Price Band 4	274.00	274.00	274.00	
Price Band 5	274.00	274.00	274.00	
Price Band 6	274.00	274.00	274.00	
OC3c at OC48 Node				
N-MSA	250.00	250.00	250.00	
Price Band 4	274.00	274.00	274.00	
Price Band 5	274.00	274.00	274.00	
Price Band 6	274.00	274.00	274.00	
OC3c at OC192Node				
N-MSA	250.00	250.00	250.00	
Price Band 4	274.00	274.00	274.00	
Price Band 5	274.00	274.00	274.00	
Price Band 6	274.00	274.00	274.00	

** Ports with 7-year term plans are only available when used in the provision of asymmetrical port facilities or subtending node facilities which are under a 7-year term plan.
# Service availability limited. Refer to # footnote on Page 23-1.

© 2022 Frontier Communications Parent, Inc. All rights reserved

23. Dedicated Ring and Optical Services (Cont'd)

23.1 Dedicated SONET Ring# (Cont'd)

(L) Rates and Charges (Cont'd)

(3) Ports (Cont'd)

(a) Monthly Rates, Per Port (Cont'd)

(2) Special Access (Cont'd)

Port Type	M-to-M	3-Year Term	5-Year Term	7-Year Term**
OC12 at OC48 Node				
N-MSA	500.00	500.00	500.00	$500.00
Price Band 4	642.00	642.00	642.00	
Price Band 5	642.00	642.00	642.00	
Price Band 6	642.00	642.00	642.00	
OC12 at OC192 Node				
N-MSA	500.00	500.00	500.00	500.00
Price Band 4	642.00	642.00	642.00	
Price Band 5	642.00	642.00	642.00	
Price Band 6	642.00	642.00	642.00	
OC12c at OC48 Node				
N-MSA	$500.00	$500.00	$500.00	
Price Band 4	514.00	514.00	514.00	
Price Band 5	514.00	514.00	514.00	
Price Band 6	514.00	514.00	514.00	
OC12c at OC192Node				
N-MSA	500.00	500.00	500.00	
Price Band 4	514.00	514.00	514.00	
Price Band 5	514.00	514.00	514.00	
Price Band 6	514.00	514.00	514.00	
OC48 at OC192 Node				
N-MSA	1,200.00	1,200.00	1,200.00	$1,200.00
Price Band 4	1,400.00	1,400.00	1,400.00	
Price Band 5	1,400.00	1,400.00	1,400.00	
Price Band 6	1,400.00	1,400.00	1,400.00	
OC48c at OC192 Node				
N-MSA	1,200.00	1,200.00	1,200.00	
Price Band 4	1,200.00	1,200.00	1,200.00	
Price Band 5	1,200.00	1,200.00	1,200.00	
Price Band 6	1,200.00	1,200.00	1,200.00	

** Ports with 7-year term plans are only available when used in the provision of asymmetrical port facilities or subtending node facilities which are under a 7-year term plan.

Service availability limited. Refer to # footnote on Page 23-1.

© 2022 Frontier Communications Parent, Inc. All rights reserved

23. Dedicated Ring and Optical Services (Cont'd)

23.1 Dedicated SONET Ring# (Cont'd)

(L) Rates and Charges (Cont'd)

(3) Ports (Cont'd)

(a) Monthly Rates, Per Port (Cont'd)

(2) Special Access (Cont'd)

Port Type	M-to-M	3-Year Term	5-Year Term
Gigabit Ethernet*			
GigE1 at OC3 Node			
N-MSA	$230.00	$230.00	$230.00
GigE1 at OC12 Node			
N-MSA	230.00	230.00	230.00
Price Band 4	230.00	230.00	230.00
Price Band 5	230.00	230.00	230.00
Price Band 6	230.00	230.00	230.00
GigE1 at OC48 Node			
N-MSA	230.00	230.00	230.00
Price Band 4	230.00	230.00	230.00
Price Band 5	230.00	230.00	230.00
Price Band 6	230.00	230.00	230.00
GigE1 at OC192 Node			
N-MSA	230.00	230.00	230.00
Price Band 4	230.00	230.00	230.00
Price Band 5	230.00	230.00	230.00
Price Band 6	230.00	230.00	230.00
GigE3 at OC12 Node			
N-MSA	$345.00	$345.00	$345.00
Price Band 4	345.00	345.00	345.00
Price Band 5	345.00	345.00	345.00
Price Band 6	345.00	345.00	345.00
GigE3 at OC48 Node			
N-MSA	345.00	345.00	345.00
Price Band 4	345.00	345.00	345.00
Price Band 5	345.00	345.00	345.00
Price Band 6	345.00	345.00	345.00

* Requires enhanced node.

Service availability limited. Refer to # footnote on Page 23-1.

© 2022 Frontier Communications Parent, Inc. All rights reserved

23. Dedicated Ring and Optical Services (Cont'd)

23.1 Dedicated SONET Ring# (Cont'd)

(L) Rates and Charges (Cont'd)

(3) Ports (Cont'd)

(a) Monthly Rates, Per Port (Cont'd)

(2) Special Access (Cont'd)

Port Type	M-to-M	3-Year Term	5-Year Term
Gigabit Ethernet* (Cont'd)			
GigE3 at OC192 Node			
N-MSA	345.00	345.00	345.00
Price Band 4	345.00	345.00	345.00
Price Band 5	345.00	345.00	345.00
Price Band 6	345.00	345.00	345.00
GigE6 at OC12 Node			
N-MSA	455.00	455.00	455.00
Price Band 4	455.00	455.00	455.00
Price Band 5	455.00	455.00	455.00
Price Band 6	455.00	455.00	455.00
GigE6 at OC48 Node			
N-MSA	455.00	455.00	455.00
Price Band 4	455.00	455.00	455.00
Price Band 5	455.00	455.00	455.00
Price Band 6	455.00	455.00	455.00
GigE6 at OC192 Node			
N-MSA	455.00	455.00	455.00
Price Band 4	455.00	455.00	455.00
Price Band 5	455.00	455.00	455.00
Price Band 6	455.00	455.00	455.00
GigE9 at OC12 Node			
N-MSA	$535.00	$535.00	$535.00
Price Band 4	535.00	535.00	535.00
Price Band 5	535.00	535.00	535.00
Price Band 6	535.00	535.00	535.00

* Requires enhanced node.

Service availability limited. Refer to # footnote on Page 23-1.

© 2022 Frontier Communications Parent, Inc. All rights reserved

23. Dedicated Ring and Optical Services (Cont'd)

23.1 Dedicated SONET Ring# (Cont'd)

(L) Rates and Charges (Cont'd)

(3) Ports (Cont'd)

(a) Monthly Rates, Per Port (Cont'd)

(2) Special Access (Cont'd)

Port Type	M-to-M	3-Year Term	5-Year Term
Gigabit Ethernet* (Cont'd)			
GigE9 at OC48 Node			
N-MSA	535.00	535.00	535.00
Price Band 4	535.00	535.00	535.00
Price Band 5	535.00	535.00	535.00
Price Band 6	535.00	535.00	535.00
GigE9 at OC192 Node			
N-MSA	535.00	535.00	535.00
Price Band 4	535.00	535.00	535.00
Price Band 5	535.00	535.00	535.00
Price Band 6	535.00	535.00	535.00
GigE12 at OC48 Node			
N-MSA	645.00	645.00	645.00
Price Band 4	645.00	645.00	645.00
Price Band 5	645.00	645.00	645.00
Price Band 6	645.00	645.00	645.00
GigE12 at OC192 Node			
N-MSA	645.00	645.00	645.00
Price Band 4	645.00	645.00	645.00
Price Band 5	645.00	645.00	645.00
Price Band 6	645.00	645.00	645.00
GigE24 at OC48 Node			
N-MSA	880.00	880.00	880.00
Price Band 4	880.00	880.00	880.00
Price Band 5	880.00	880.00	880.00
Price Band 6	880.00	880.00	880.00
GigE24 at OC192 Node			
N-MSA	880.00	880.00	880.00
Price Band 4	880.00	880.00	880.00
Price Band 5	880.00	880.00	880.00
Price Band 6	880.00	880.00	880.00

* Requires enhanced node.
# Service availability limited. Refer to # footnote on Page 23-1.

© 2022 Frontier Communications Parent, Inc. All rights reserved

23. Dedicated Ring and Optical Services (Cont'd)

23.1 Dedicated SONET Ring# (Cont'd)

(L) Rates and Charges (Cont'd)

(3) Ports (Cont'd)

(a) Monthly Rates, Per Port (Cont'd)

(3) Storage Interface Ports*

Port Type	M-to-M	3-Year Term	5-Year Term
1 Gbps Fibre Channel at OC48 Node N-MSA	$1,000.00	$1,000.00	$1,000.00
1 Gbps Fibre Channel at OC192 Node N-MSA	1,000.00	1,000.00	1,000.00
1 Gbps FICON at OC48 Node N-MSA	1,000.00	$1,000.00	1,000.00
1 Gbps FICON at OC192 Node N-MSA	1,000.00	1,000.00	1,000.00

* Requires enhanced node

Service availability limited. Refer to # footnote on Page 23-1.

© 2022 Frontier Communications Parent, Inc. All rights reserved

23. Dedicated Ring and Optical Services (Cont'd)

23.1 Dedicated SONET Ring## (Cont'd)

(L) Rates and Charges (Cont'd)

(3) Ports (Cont'd)

(b) Nonrecurring Charges

(1) Initial Installation Charges,
Per Month-to-Month Ports Only
(excluding Storage Interface Ports)

(a) Switched Access

Port Type	Nonrecurring Charge First	Nonrecurring Charge Additional
DS1#	$525.00	$210.00
DS3, STS1, OC3, or DS3 Transmux#	805.00	343.00
OC12	767.00	327.00
OC48	767.00	327.00

(b) Special Access

OC3		
N-MSA	$805.00	$343.00
Price Band 4	805.00	343.00
Price Band 5	805.00	343.00
Price Band 6	805.00	343.00
OC3c		
N-MSA	805.00	343.00
Price Band 4	805.00	343.00
Price Band 5	805.00	343.00
Price Band 6	805.00	343.00
DS3 or STS1		
Price Band 4	805.00	343.00
Price Band 5	805.00	343.00
Price Band 6	805.00	343.00
DS3 Transmux at OC3 Node#		
Price Band 4	805.00	343.00
Price Band 5	805.00	343.00
Price Band 6	805.00	343.00
DS3 Transmux at OC12 Node#		
Price Band 4	805.00	343.00
Price Band 5	805.00	343.00
Price Band 6	805.00	343.00

Requires enhanced node.

Service availability limited. Refer to # footnote on Page 23-1.

© 2022 Frontier Communications Parent, Inc. All rights reserved

23. Dedicated Ring and Optical Services (Cont'd)

23.1 Dedicated SONET Ring## (Cont'd)

(L) Rates and Charges (Cont'd)

(3) Ports (Cont'd)

(b) Nonrecurring Charges (Cont'd)

(1) Initial Installation Charges,
Per Month-to-Month Ports Only
(excluding Storage Interface Ports) (Cont'd)

(b) Special Access (Cont'd)

Port Type	Nonrecurring Charge First	Nonrecurring Charge Additional
DS3 Transmux at OC48 Node#		
Price Band 4	805.00	343.00
Price Band 5	805.00	343.00
Price Band 6	805.00	343.00
DS3 Transmux at OC192 Node#		
Price Band 4	805.00	343.00
Price Band 5	805.00	343.00
Price Band 6	805.00	343.00
DS1#		
Price Band 4	525.00	210.00
Price Band 5	525.00	210.00
Price Band 6	525.00	210.00
OC12 or OC12c		
N-MSA	767.00	327.00
Price Band 4	767.00	327.00
Price Band 5	767.00	327.00
Price Band 6	767.00	327.00
OC48 or OC48c		
N-MSA	767.00	327.00
Price Band 4	767.00	327.00
Price Band 5	767.00	327.00
Price Band 6	767.00	327.00
Gigabit Ethernet#		
- Any GigE		
N-MSA	767.00	327.00
Price Band 4	767.00	327.00
Price Band 5	767.00	327.00
Price Band 6	767.00	327.00

Requires an enhanced node.
Service availability limited. Refer to # footnote on Page 23-1.

© 2022 Frontier Communications Parent, Inc. All rights reserved

23. Dedicated Ring and Optical Services (Cont'd)

23.1 Dedicated SONET Ring# (Cont'd)

(L) Rates and Charges (Cont'd)

(3) Ports (Cont'd)

(b) Nonrecurring Charges (Cont'd)

(2) Subsequent Installation Charges,
All Ports except Storage Interface Ports

(a) Switched Access

Port Type	Nonrecurring Charge First	Nonrecurring Charge Additional
DS1**, DS3, STS1, OC3, OC12, or DS3 Transmux	$1.00	$0.75
OC48	1.00	0.75

** Requires enhanced node when provided from an OC12, OC48 or OC192 node.

(b) Special Access

OC3		
N-MSA	$1.00	$0.75
Price Band 4	1.00	0.75
Price Band 5	1.00	0.75
Price Band 6	1.00	0.75
OC3c		
N-MSA	1.00	0.75
Price Band 4	1.00	0.75
Price Band 5	1.00	0.75
Price Band 6	1.00	0.75
DS3 or STS1		
Price Band 4	1.00	0.75
Price Band 5	1.00	0.75
Price Band 6	1.00	0.75
DS3 Transmux**		
Price Band 4	1.00	0.75
Price Band 5	1.00	0.75
Price Band 6	1.00	0.75
DS1*		
Price Band 4	1.00	0.75
Price Band 5	1.00	0.75
Price Band 6	1.00	0.75

* Requires an enhanced node when provided from an OC12, OC48 or OC192 node.
** Requires an enhanced node.

Service availability limited. Refer to # footnote on Page 23-1.

© 2022 Frontier Communications Parent, Inc. All rights reserved

23. Dedicated Ring and Optical Services (Cont'd)

23.1 Dedicated SONET Ring# (Cont'd)

(L) Rates and Charges (Cont'd)

(3) Ports (Cont'd)

(b) Nonrecurring Charges (Cont'd)

(2) Subsequent Installation Charges,
All Ports except Storage Interface Ports

(b) Special Access

Port Type	Nonrecurring Charge First	Nonrecurring Charge Additional
OC12		
N-MSA	$1.00	$0.75
Price Band 4	1.00	0.75
Price Band 5	1.00	0.75
Price Band 6	1.00	0.75
OC12c		
N-MSA	1.00	0.75
Price Band 4	1.00	0.75
Price Band 5	1.00	0.75
Price Band 6	1.00	0.75
OC48		
N-MSA	1.00	0.75
Price Band 4	1.00	0.75
Price Band 5	1.00	0.75
Price Band 6	1.00	0.75
OC48c		
N-MSA	1.00	0.75
Price Band 4	1.00	0.75
Price Band 5	1.00	0.75
Price Band 6	1.00	0.75
Gigabit Ethernet* - Any GigE		
N-MSA	1.00	0.75
Price Band 4	1.00	0.75
Price Band 5	1.00	0.75
Price Band 6	1.00	0.75

* Requires an enhanced node when provided from an OC12, OC48 or OC192 node.

Service availability limited. Refer to # footnote on Page 23-1.

© 2022 Frontier Communications Parent, Inc. All rights reserved

23. Dedicated Ring and Optical Services (Cont'd)

23.1 Dedicated SONET Ring# (Cont'd)

(L) Rates and Charges (Cont'd)

(3) Ports (Cont'd)

(b) Nonrecurring Charges (Cont'd)

(3) Initial and Subsequent Installation Charges: Month-to-Month Storage Interface Ports only

Port Type	First	Additional
Storage Interface Ports*		
- 1 Gbps Fibre Channel at OC48 Node N-MSA	$767.00	$327.00
- 1 Gbps Fibre Channel at OC192 Node N-MSA	767.00	327.00
- 1 Gbps FICON at OC48 Node N-MSA	767.00	327.00
- 1 Gbps FICON at OC192 Node N-MSA	767.00	327.00

* Requires an enhanced node when provided from an OC12, OC48 or OC192 node.

Service availability limited. Refer to # footnote on Page 23-1.

© 2022 Frontier Communications Parent, Inc. All rights reserved

23. Dedicated Ring and Optical Services (Cont'd)

23.1 Dedicated SONET Ring# (Cont'd)

(L) Rates and Charges (Cont'd)

(4) Optional Features

(a) Customer Service Management Optional Feature (CSM)

(1) Service Level, per ring

Service Level	Monthly Rate
Level 1: Network View only	
3-Year	
N-MSA	$250.00
Price Band 4	250.00
Price Band 5	250.00
Price Band 6	250.00
5-Year	
N-MSA	250.00
Price Band 4	250.00
Price Band 5	250.00
Price Band 6	250.00
7-Year	
N-MSA	250.00
Price Band 4	250.00
Price Band 5	250.00
Price Band 6	250.00

Service availability limited. Refer to # footnote on Page 23-1.

© 2022 Frontier Communications Parent, Inc. All rights reserved

23. Dedicated Ring and Optical Services (Cont'd)

23.1 Dedicated SONET Ring# (Cont'd)

(L) Rates and Charges (Cont'd)

(4) Optional Features (Cont'd)

(a) Customer Service Management Optional Feature (CSM) (Cont'd)

(1) Service Level, per ring (Cont'd)

Service Level	Monthly Rate
Level 2: Network View & Basic Reports	
3-Year	
N-MSA	$450.00
Price Band 4	450.00
Price Band 5	450.00
Price Band 6	450.00
5-Year	
N-MSA	450.00
Price Band 4	450.00
Price Band 5	450.00
Price Band 6	450.00
7-Year	
N-MSA	450.00
Price Band 4	450.00
Price Band 5	450.00
Price Band 6	450.00
Customized Reports	ICB

Service availability limited. Refer to # footnote on Page 23-1.

© 2022 Frontier Communications Parent, Inc. All rights reserved

23. Dedicated Ring and Optical Services (Cont'd)

23.1 Dedicated SONET Ring# (Cont'd)

(L) Rates and Charges (Cont'd)

(4) Optional Features (Cont'd)

(a) Customer Service Management Optional Feature (CSM) (Cont'd)

(1) Service Level, per ring (Cont'd)

Service Level	Monthly Rate
Level 3: Network View, Basic Reports, & Reconfiguration	
3-Year	
N-MSA	$850.00
Price Band 4	850.00
Price Band 5	850.00
Price Band 6	850.00
5-Year	
N-MSA	850.00
Price Band 4	850.00
Price Band 5	850.00
Price Band 6	850.00
7-Year	
N-MSA	850.00
Price Band 4	850.00
Price Band 5	850.00
Price Band 6	850.00
Customized Reports	ICB

Service availability limited. Refer to # footnote on Page 23-1.

© 2022 Frontier Communications Parent, Inc. All rights reserved

23. Dedicated Ring and Optical Services (Cont'd)

23.1 Dedicated SONET Ring# (Cont'd)

(L) Rates and Charges (Cont'd)

(4) Optional Features (Cont'd)

(a) Customer Service Management Optional Feature (CSM) (Cont'd)

(2) Preplanned Port, per port — Rates and Charges are the same as those set forth in (L)(3) preceding.

(3) Node Setup, per node on the ring equipped during initial establishment

		Nonrecurring Charge
N-MSA	$200.00	
Price Band 4		200.00
Price Band 5		200.00
Price Band 6		200.00

(4) Initial CSM Setup, first partition with up to 6 users

N-MSA	$500.00	
Price Band 4		500.00
Price Band 5		500.00
Price Band 6		500.00

(5) Setup of additional Partition or change in CSM Service Level, each

N-MSA	$500.00	
Price Band 4		500.00
Price Band 5		500.00
Price Band 6		500.00

(6) Setup of Additional Users, up to 6 additional Users

N-MSA	$350.00	
Price Band 4		350.00
Price Band 5		350.00
Price Band 6		350.00

Service availability limited. Refer to # footnote on Page 23-1.

© 2022 Frontier Communications Parent, Inc. All rights reserved

23. Dedicated Ring and Optical Services (Cont'd)

23.1 Dedicated SONET Ring# (Cont'd)

(L) Rates and Charges (Cont'd)

(4) Optional Features (Cont'd)

(a) Customer Service Management Optional Feature (CSM) (Cont'd)

		Nonrecurring Charge
(7) Add/Remove Node, per node added to, or removed from, the CSM ring		
N-MSA	$200.00	
Price Band 4		200.00
Price Band 5		200.00
Price Band 6		200.00
(8) Telephone Company performed Reconfiguration, per mapping		
N-MSA	$300.00	
Price Band 4		300.00
Price Band 5		300.00
Price Band 6		300.00
(9) Consultation and Support, each 30 minutes or fraction thereof		
N-MSA	$100.00	
Price Band 4		100.00
Price Band 5		100.00
Price Band 6		100.00

Service availability limited. Refer to # footnote on Page 23-1.

© 2022 Frontier Communications Parent, Inc. All rights reserved

23. Dedicated Ring and Optical Services (Cont'd)

23.1 Dedicated SONET Ring# (Cont'd)

(L) Rates and Charges (Cont'd)

(4) Optional Features (Cont'd)

(b) Direct TL1 Monitoring Optional Feature (DTM)

	Monthly Rate
(1) DTM, per ring	
3 year	
N-MSA	$450.00
Price Band 4	450.00
Price Band 5	450.00
Price Band 6	450.00
5 year	
N-MSA	450.00
Price Band 4	450.00
Price Band 5	450.00
Price Band 6	450.00
7 year	
N-MSA	450.00
Price Band 4	450.00
Price Band 5	450.00
Price Band 6	450.00

Service availability limited. Refer to # footnote on Page 23-1.

© 2022 Frontier Communications Parent, Inc. All rights reserved

23. Dedicated Ring and Optical Services (Cont'd)

23.1 Dedicated SONET Ring# (Cont'd)

(L) Rates and Charges (Cont'd)

(4) Optional Features (Cont'd)

(b) Direct TL1 Monitoring Optional Feature (DTM) (Cont'd)

		Nonrecurring Charge
(2)	Node Setup, per node on the ring equipped during initial establishment	
	N-MSA	$200.00
	Price Band 4	200.00
	Price Band 5	200.00
	Price Band 6	200.00
(3)	Initial DTM Setup	
	N-MSA	500.00
	Price Band 4	500.00
	Price Band 5	500.00
	Price Band 6	500.00
(4)	Add/Remove Node, per node added to, or removed from, the DTM ring	
	N-MSA	200.00
	Price Band 4	200.00
	Price Band 5	200.00
	Price Band 6	200.00
(5)	Consultation and Support, each 30 minutes or fraction thereof	
	N-MSA	100.00
	Price Band 4	100.00
	Price Band 5	100.00
	Price Band 6	100.00

Service availability limited. Refer to # footnote on Page 23-1.

© 2022 Frontier Communications Parent, Inc. All rights reserved

23. Dedicated Ring and Optical Services (Cont'd)

23.1 Dedicated SONET Ring# (Cont'd)

(L) Rates and Charges (Cont'd)

(5) Partial Ring Pass-Through Interface,
- per Interface

	Monthly Rate
3-Year Term	
OC12	$4,860.00
OC48	10,658.00
OC192	16,460.00
5-Year Term	
OC12	$2,700.00
OC48	4,604.00
OC192	9,200.00
7-Year Term	
OC12	$2,430.00
OC48	4,143.00
OC192	8,280.00

(6) Partial Ring Channel Mapping,
per channel mapped on a partial ring

Channel Type	Nonrecurring Charge
DS1*	$150.00
DS3 or STS1*	150.00
OC3	150.00
OC3c	150.00
OC12	150.00
OC12c	150.00
OC48	150.00
OC48c	150.00
GigE1	150.00
GigE3	150.00
GigE6	150.00
GigE9	150.00
GigE12	150.00
GigE24	150.00
1 Gbps Fibre Channel	150.00
1 Gbps FICON	150.00

* Rate applies to Price Bands 4, 5 and 6.
# Service availability limited. Refer to # footnote on Page 23-1.

© 2022 Frontier Communications Parent, Inc. All rights reserved

23. Dedicated Ring and Optical Services (Cont'd)

23.1 Dedicated SONET Ring# (Cont'd)

(L) Rates and Charges (Cont'd)

(7) Asymmetrical Port Facility (APF)*

(a) Monthly Rates, per APF

(1) Month to Month Billing

(a) Switched Access

APF Type	Monthly Rate
OC3 APF*	
- OC3 Mileage, per mile	$ 500.00
- OC3 Channel Extension, each	3,800.00
OC12 APF*	
- OC12 Mileage, per mile	1,000.00
- OC12 Channel Extension, each	7,000.00
OC48 APF*	
- OC48 Mileage, per mile	3,500.00
- OC48 Channel Extension, each	11,000.00

(b) Special Access

APF Type	Monthly Rate
OC3 APF*	
- OC3 Mileage, per mile	$ 500.00
- OC3 Channel Extension, each	3,800.00
OC12 APF*	
- OC12 Mileage, per mile	1,000.00
- OC12 Channel Extension, each	7,000.00
OC48 APF*	
- OC48 Mileage, per mile	3,500.00
- OC48 Channel Extension, each	11,000.00

* Requires an enhanced node

Service availability limited. Refer to # footnote on Page 23-1.

© 2022 Frontier Communications Parent, Inc. All rights reserved

23. Dedicated Ring and Optical Services (Cont'd)

23.1 Dedicated SONET Ring# (Cont'd)

(L) Rates and Charges (Cont'd)

(7) Asymmetrical Port Facility (APF)* (Cont'd)

(a) Monthly Rates, per APF (Cont'd)

(2) Term Plan Billing

(a) Switched Access

APF Type	3-Year Rate
OC3 APF*	
- OC3 Mileage, per mile	$ 375.00
- OC3 Channel Extension, each	2,850.00
OC12 APF*	
- OC12 Mileage, per mile	750.00
- OC12 Channel Extension, each	5,500.00
OC48 APF*	
- OC48 Mileage, per mile	2,625.00
- OC48 Channel Extension, each	7,500.00
	5-Year Term
OC3 APF*	
- OC3 Mileage, per mile	$ 337.50
- OC3 Channel Extension, each	2,565.00
OC12 APF*	
- OC12 Mileage, per mile	675.00
- OC12 Channel Extension, each	4,500.00
OC48 APF*	
- OC48 Mileage, per mile	2,362.00
- OC48 Channel Extension, each	6,350.50

* Requires an enhanced node

Service availability limited. Refer to # footnote on Page 23-1.

© 2022 Frontier Communications Parent, Inc. All rights reserved

23. Dedicated Ring and Optical Services (Cont'd)

23.1 Dedicated SONET Ring# (Cont'd)

(L) Rates and Charges (Cont'd)

(7) Asymmetrical Port Facility (APF)* (Cont'd)

(a) Monthly Rates, per APF (Cont'd)

(2) Term Plan Billing (Cont'd)

(a) Switched Access (Cont'd)

APF Type	7-Year Rate
OC3 APF*	
- OC3 Mileage, per mile	$ 303.75
- OC3 Channel Extension, each	2,308.50
OC12 APF*	
- OC12 Mileage, per mile	607.50
- OC12 Channel Extension, each	4,050.00
OC48 APF*	
- OC48 Mileage, per mile	2,126.25
- OC48 Channel Extension, each	5,715.00

* Requires an enhanced node

Service availability limited. Refer to # footnote on Page 23-1.

© 2022 Frontier Communications Parent, Inc. All rights reserved

23. Dedicated Ring and Optical Services (Cont'd)

23.1 Dedicated SONET Ring# (Cont'd)

(L) Rates and Charges (Cont'd)

(7) Asymmetrical Port Facility (APF)* (Cont'd)

(a) Monthly Rates, per APF (Cont'd)

(2) Term Plan Billing (Cont'd)

(b) Special Access

APF Type	3-Year Rate
OC3 APF*	
- OC3 Mileage, per mile	$ 375.00
- OC3 Channel Extension, each	2,850.00
OC12 APF*	
- OC12 Mileage, per mile	750.00
- OC12 Channel Extension, each	5,500.00
OC48 APF*	
- OC48 Mileage, per mile	2,625.00
- OC48 Channel Extension, each	7,500.00
	5-Year Term
OC3 APF*	
- OC3 Mileage, per mile	$ 337.50
- OC3 Channel Extension, each	2,565.00
OC12 APF*	
- OC12 Mileage, per mile	675.00
- OC12 Channel Extension, each	4,500.00
OC48 APF*	
- OC48 Mileage, per mile	2,362.50
- OC48 Channel Extension, each	6,350.00

* Requires an enhanced node

Service availability limited. Refer to # footnote on Page 23-1.

© 2022 Frontier Communications Parent, Inc. All rights reserved

23. Dedicated Ring and Optical Services (Cont'd)

23.1 Dedicated SONET Ring# (Cont'd)

(L) Rates and Charges (Cont'd)

(7) Asymmetrical Port Facility (APF)* (Cont'd)

(a) Monthly Rates, per APF (Cont'd)

(2) Term Plan Billing (Cont'd)

(b) Special Access (Cont'd)

APF Type	7-Year Rate
OC3 APF*	
- OC3 Mileage, per mile	$ 303.75
- OC3 Channel Extension, each	2,308.50
OC12 APF*	
- OC12 Mileage, per mile	607.50
- OC12 Channel Extension, each	4,050.00
OC48 APF*	
- OC48 Mileage, per mile	2,126.25
- OC48 Channel Extension, each	5,715.00

(b) Nonrecurring Charges

(1) APF Mapping Charge,
- per lower capacity channel mapped between two APFs on the same DSR

(a) Switched Access

Channel Type	Nonrecurring Charge
All Channel Types	$500.00

(b) Special Access

Channel Type	Nonrecurring Charge
All Channel Types	$500.00

* Requires an enhanced node

Service availability limited. Refer to # footnote on Page 23-1.

© 2022 Frontier Communications Parent, Inc. All rights reserved

23. Dedicated Ring and Optical Services (Cont'd)

23.1 Dedicated SONET Ring# (Cont'd)

(L) Rates and Charges (Cont'd)

(8) Subtending Node Facility (SNF)*

(a) Monthly Rates, per SNF extended

(1) Term Plan Billing

(a) Switched Access

SNF Type	3-Year Term
OC3 SNF*	
- OC3 Mileage, per mile	$ 375.00
- OC3 Channel Extension, each	2,850.00
OC12 SNF*	
- OC12 Mileage, per mile	750.00
- OC12 Channel Extension, each	5,500.00
OC48 SNF*	
- OC48 Mileage, per mile	2,625.00
- OC48 Channel Extension, each	7,500.00

	5-Year Term
OC3 SNF*	
- OC3 Mileage, per mile	$ 337.50
- OC3 Channel Extension, each	2,565.00
OC12 SNF*	
- OC12 Mileage, per mile	675.00
- OC12 Channel Extension, each	4,500.00
OC48 SNF*	
- OC48 Mileage, per mile	2,362.50
- OC48 Channel Extension, each	6,350.00

* Requires an enhanced node

Service availability limited. Refer to # footnote on Page 23-1.

© 2022 Frontier Communications Parent, Inc. All rights reserved

23. Dedicated Ring and Optical Services (Cont'd)

23.1 Dedicated SONET Ring# (Cont'd)

(L) Rates and Charges (Cont'd)

(8) Subtending Node Facility (SNF)* (Cont'd)

(a) Monthly Rates, per SNF extended (Cont'd)

(1) Term Plan Billing (Cont'd)

(a) Switched Access (Cont'd)

SNF Type	7-Year Term
OC3 SNF*	
- OC3 Mileage, per mile	$ 303.75
- OC3 Channel Extension, each	2,308.50
OC12 SNF*	
- OC12 Mileage, per mile	607.50
- OC12 Channel Extension, each	4,050.00
OC48 SNF*	
- OC48 Mileage, per mile	2,126.25
- OC48 Channel Extension, each	5,715.00

* Requires an enhanced node

Service availability limited. Refer to # footnote on Page 23-1.

© 2022 Frontier Communications Parent, Inc. All rights reserved

23. Dedicated Ring and Optical Services (Cont'd)

23.1 Dedicated SONET Ring# (Cont'd)

(L) Rates and Charges (Cont'd)

(8) Subtending Node Facility (SNF)* (Cont'd)

(a) Monthly Rates, per SNF extended (Cont'd)

(1) Term Plan Billing (Cont'd)

(b) Special Access

SNF Type	3-Year Term
OC3 SNF*	
- OC3 Mileage, per mile	$ 375.00
- OC3 Channel Extension, each	2,850.00
OC12 SNF*	
- OC12 Mileage, per mile	750.00
- OC12 Channel Extension, each	5,500.00
OC48 SNF*	
- OC48 Mileage, per mile	2,625.00
- OC48 Channel Extension, each	7,500.00
	5-Year Term
OC3 SNF*	
- OC3 Mileage, per mile	$ 337.50
- OC3 Channel Extension, each	2,565.00
OC12 SNF*	
- OC12 Mileage, per mile	675.00
- OC12 Channel Extension, each	4,500.00
OC48 SNF*	
- OC48 Mileage, per mile	2,362.50
- OC48 Channel Extension, each	6,350.00

* Requires an enhanced node

Service availability limited. Refer to # footnote on Page 23-1.

© 2022 Frontier Communications Parent, Inc. All rights reserved

23. Dedicated Ring and Optical Services (Cont'd)

23.1 Dedicated SONET Ring# (Cont'd)

(L) Rates and Charges (Cont'd)

(8) Subtending Node Facility (SNF)* (Cont'd)

(a) Monthly Rates, per SNF extended (Cont'd)

(1) Term Plan Billing (Cont'd)

(b) Special Access (Cont'd)

SNF Type	7-Year Term
OC3 SNF*	
- OC3 Mileage, per mile	$ 303.75
- OC3 Channel Extension, each	2,308.50
OC12 SNF*	
- OC12 Mileage, per mile	607.50
- OC12 Channel Extension, each	4,050.00
OC48 SNF*	
- OC48 Mileage, per mile	2,126.25
- OC48 Channel Extension, each	5,715.00

* Requires an enhanced node

Service availability limited. Refer to # footnote on Page 23-1.

© 2022 Frontier Communications Parent, Inc. All rights reserved

23. Dedicated Ring and Optical Services (Cont'd)

23.1 Dedicated SONET Ring# (Cont'd)

(L) Rates and Charges (Cont'd)

(9) Port Nodes*
- Per Port Node

(a) Term Plan Billing

(1) Switched Access

Port Node Type	Monthly Rate 3-Year Rate
- OC3 at OC3 Node	$ 600.00
- OC3 at OC12 Node	600.00
- OC3 at OC48 Node	600.00
- OC3 at OC192 Node	600.00
- OC12 at OC12 Node	850.00
- OC12 at OC48 Node	850.00
- OC12 at OC192 Node	850.00
- OC48 at OC48 Node	1,800.00
- OC48 at OC192 Node	1,800.00
- OC192 at OC192 Node	4,500.00

Port Node Type	Monthly Rate 5-Year Rate
- OC3 at OC3 Node	$ 500.00
- OC3 at OC12 Node	500.00
- OC3 at OC48 Node	500.00
- OC3 at OC192 Node	500.00
- OC12 at OC12 Node	750.00
- OC12 at OC48 Node	750.00
- OC12 at OC192 Node	750.00
- OC48 at OC48 Node	1,600.00
- OC48 at OC192 Node	1,600.00
- OC192 at OC192 Node	3,800.00

* Requires an enhanced node

Service availability limited. Refer to # footnote on Page 23-1.

© 2022 Frontier Communications Parent, Inc. All rights reserved

23. Dedicated Ring and Optical Services (Cont'd)

23.1 Dedicated SONET Ring# (Cont'd)

(L) Rates and Charges (Cont'd)

(9) Port Nodes* (Cont'd)
- Per Port Node

(a) Term Plan Billing (Cont'd)

(1) Switched Access (Cont'd)

Port Node Type	Monthly Rate 7-Year Rate
- OC3 at OC3 Node	$ 450.00
- OC3 at OC12 Node	450.00
- OC3 at OC48 Node	450.00
- OC3 at OC192 Node	450.00
- OC12 at OC12 Node	700.00
- OC12 at OC48 Node	700.00
- OC12 at OC192 Node	700.00
- OC48 at OC48 Node	1,500.00
- OC48 at OC192 Node	1,500.00
- OC192 at OC192 Node	3,000.00

* Requires an enhanced node

Service availability limited. Refer to # footnote on Page 23-1.

© 2022 Frontier Communications Parent, Inc. All rights reserved

23. Dedicated Ring and Optical Services (Cont'd)

23.1 Dedicated SONET Ring# (Cont'd)

(L) Rates and Charges (Cont'd)

(9) Port Nodes* (Cont'd)
- Per Port Node

(a) Term Plan Billing (Cont'd)

(2) Special Access

Port Node Type	Monthly Rate 3-Year Rate
- OC3 at OC3 Node	$ 600.00
- OC3 at OC12 Node	600.00
- OC3 at OC48 Node	600.00
- OC3 at OC192 Node	600.00
- OC12 at OC12 Node	850.00
- OC12 at OC48 Node	850.00
- OC12 at OC192 Node	850.00
- OC48 at OC48 Node	1,800.00
- OC48 at OC192 Node	1,800.00
- OC192 at OC192 Node	4,500.00

Port Node Type	Monthly Rate 5-Year Rate
- OC3 at OC3 Node	$ 500.00
- OC3 at OC12 Node	500.00
- OC3 at OC48 Node	500.00
- OC3 at OC192 Node	500.00
- OC12 at OC12 Node	750.00
- OC12 at OC48 Node	750.00
- OC12 at OC192 Node	750.00
- OC48 at OC48 Node	1,600.00
- OC48 at OC192 Node	1,600.00
- OC192 at OC192 Node	3,800.00

* Requires an enhanced node

Service availability limited. Refer to # footnote on Page 23-1.

© 2022 Frontier Communications Parent, Inc. All rights reserved

23. Dedicated Ring and Optical Services (Cont'd)

23.1 Dedicated SONET Ring# (Cont'd)

(L) Rates and Charges (Cont'd)

(9) Port Nodes* (Cont'd)
- Per Port Node

(a) Term Plan Billing (Cont'd)

(2) Special Access (Cont'd)

Port Node Type	USOC	Monthly Rate 7-Year Rate
- OC3 at OC3 Node		$ 450.00
- OC3 at OC12 Node		450.00
- OC3 at OC48 Node		450.00
- OC3 at OC192 Node		450.00
- OC12 at OC12 Node		700.00
- OC12 at OC48 Node		700.00
- OC12 at OC192 Node		700.00
- OC48 at OC48 Node		1,500.00
- OC48 at OC192 Node		1,500.00
- OC192 at OC192 Node		3,000.00

* Requires an enhanced node

Service availability limited. Refer to # footnote on Page 23-1.

© 2022 Frontier Communications Parent, Inc. All rights reserved

23. Dedicated Ring and Optical Services (Cont'd)

23.1 Dedicated SONET Ring# (Cont'd)

(L) Rates and Charges (Cont'd)

(10) Dual Node Cross-Connect Charge
- Per lower capacity channel provided through two interconnecting nodes in a subtending ring arrangement

(a) Switched Access

Channel Type	Nonrecurring Charge
All Channel Types	$500.00

(b) Special Access

Channel Type	Nonrecurring Charge
All Channel Types	$500.00

Service availability limited. Refer to # footnote on Page 23-1.

© 2022 Frontier Communications Parent, Inc. All rights reserved

24. RESERVED FOR FUTURE USE

© 2022 Frontier Communications Parent, Inc. All rights reserved

25. Discount Plans – Not Available (C)

The following discount plans are no longer available Commitment Discount Plans; Service Discount Plans, and National Discount Plans.

25.1 Commitment Discount Plans – Not Available# (D)

(D)

Effective June 1, 2019, the Commitment Discount Plan (CDP) is no longer permitted. CDP customers subscribed as of June 1, 2019 may continue with their existing subscriptions but will not be eligible to extend, renew, reenroll in, convert to a new CDP period, or in any other way continue their existing plan beyond its currently scheduled expiration. If at any time an existing customer terminates its CDP, the customer may not re-subscribe to the plan.

© 2022 Frontier Communications Parent, Inc. All rights reserved

25. Reserved for Future Use

© 2022 Frontier Communications Parent, Inc. All rights reserved

25. Reserved For Future Use

© 2022 Frontier Communications Parent, Inc. All rights reserved

25. Reserved for Future Use

© 2022 Frontier Communications Parent, Inc. All rights reserved

25. Reserved for Future Use

© 2022 Frontier Communications Parent, Inc. All rights reserved

25. Reserved For Future Use

© 2022 Frontier Communications Parent, Inc. All rights reserved

25. Reserved For Future Use

© 2022 Frontier Communications Parent, Inc. All rights reserved

25. Reserved for Future Use

© 2022 Frontier Communications Parent, Inc. All rights reserved

25. Reserved for Future Use

© 2022 Frontier Communications Parent, Inc. All rights reserved

25. Reserved for Future Use

© 2022 Frontier Communications Parent, Inc. All rights reserved

25. Reserved for Future Use

© 2022 Frontier Communications Parent, Inc. All rights reserved

25. Reserved for Future Use

© 2022 Frontier Communications Parent, Inc. All rights reserved

25. Reserved for Future Use

© 2022 Frontier Communications Parent, Inc. All rights reserved

25.Reserved for Future Use

© 2022 Frontier Communications Parent, Inc. All rights reserved

25. Reserved for Future Use

© 2022 Frontier Communications Parent, Inc. All rights reserved

25. Reserved for Future Use

© 2022 Frontier Communications Parent, Inc. All rights reserved

25. Reserved for Future Use

© 2022 Frontier Communications Parent, Inc. All rights reserved

25. Reserved for Future Use

© 2022 Frontier Communications Parent, Inc. All rights reserved

25. Reserved for Future Use

© 2022 Frontier Communications Parent, Inc. All rights reserved

25. Reserved for Future Use

(C)

© 2022 Frontier Communications Parent, Inc. All rights reserved

25. Reserved for Future Use

© 2022 Frontier Communications Parent, Inc. All rights reserved

25. Reserved for Future Use

© 2022 Frontier Communications Parent, Inc. All rights reserved

25. Reserved for Future Use

© 2022 Frontier Communications Parent, Inc. All rights reserved

25. Reserved for Future Use

© 2022 Frontier Communications Parent, Inc. All rights reserved

25. Reserved for Future Use

© 2022 Frontier Communications Parent, Inc. All rights reserved

25. Reserved for Future Use

© 2022 Frontier Communications Parent, Inc. All rights reserved

25. Reserved for Future Use

© 2022 Frontier Communications Parent, Inc. All rights reserved

25. Reserved for Future Use

© 2022 Frontier Communications Parent, Inc. All rights reserved

25. Reserved for Future Use

© 2022 Frontier Communications Parent, Inc. All rights reserved

25. Reserved for Future Use

© 2022 Frontier Communications Parent, Inc. All rights reserved

25. Reserved for Future Use

© 2022 Frontier Communications Parent, Inc. All rights reserved

25. Reserved for Future Use

© 2022 Frontier Communications Parent, Inc. All rights reserved

25. Reserved for Future Use)

© 2022 Frontier Communications Parent, Inc. All rights reserved

25. Reserved for Future Use

© 2022 Frontier Communications Parent, Inc. All rights reserved

25. Reserved for Future Use

© 2022 Frontier Communications Parent, Inc. All rights reserved

25. Reserved for Future Use

© 2022 Frontier Communications Parent, Inc. All rights reserved

25. Reserved for Future Use

© 2022 Frontier Communications Parent, Inc. All rights reserved

25. Reserved for Future Use

© 2022 Frontier Communications Parent, Inc. All rights reserved

25.1 Reserved For Future Use

© 2022 Frontier Communications Parent, Inc. All rights reserved

25. Reserved for Future Use

© 2022 Frontier Communications Parent, Inc. All rights reserved

25. Reserved for Future Use

© 2022 Frontier Communications Parent, Inc. All rights reserved

25.1 Reserved for Future Use

© 2022 Frontier Communications Parent, Inc. All rights reserved

25. Reserved for Future Use

© 2022 Frontier Communications Parent, Inc. All rights reserved

25. Reserved for Future Use

© 2022 Frontier Communications Parent, Inc. All rights reserved