FACILITIES FOR INTERSTATE ACCESS

Interstate Service Guide and Pricelist
for Customers of Detariffed Access Services
within the operating territories
listed on the Title Pages

LEGAL NOTICE

The FRONTIER Interstate Service Guide and Pricelist (Guide) applies to the FRONTIER "Detariffed Services" (as defined below) and other telecommunications services that are set forth in this Guide.

Detariffed Services, as described in this document, are interstate special access services for which tariffs were withdrawn pursuant to FCC Report and Order, FCC 17-43, released April 28, 2017.

Beginning upon the effectiveness of the withdrawal of Detariffed Service tariffs, Detariffed Services will be subject to and provided pursuant to the rates, terms and conditions of this Guide, unless a separately executed service agreement between you and Frontier provides otherwise.

Prospective customers wishing to purchase services at the rates, terms and conditions in the Guide may do so by initiating orders through the same processes used to order services from FRONTIER's interstate access tariffs.

Service that is ordered without a separately executed service agreement between you and FRONTIER that applies to that order, will also be subject to the FRONTIER Interstate Access Service Agreement at https://wholesale.frontier.com/docs/wholesaledocs/frontier-interstate-access-service-agreement.pdf.

The services described in the Guide may be available through negotiated agreements, which may include rates, terms or conditions more favorable to you than those in the Guide. Prospective customers wishing to purchase Guide services at rates, terms or conditions different from those described in the Guide and the applicable FRONTIER Interstate Access Service Agreement may contact their FRONTIER service representative or go to the FRONTIER website at https://wholesale.frontier.com/wholesale/access-services/interstate-service-guide.

FRONTIER reserves the right to change the rates, terms and conditions in the Guide from time to time. Notification of Guide changes will be made available at the FRONTIER website.

DISCLAIMER: THIS DOCUMENTATION IS FOR INFORMATIONAL PURPOSES ONLY AND DOES NOT OBLIGATE FRONTIER TO PROVIDE SERVICES IN THE MANNER DESCRIBED IN THIS DOCUMENT. FRONTIER RESERVES THE RIGHT AS ITS SOLE OPTION TO MODIFY OR REVISE THE INFORMATION IN THIS DOCUMENT AT ANY TIME WITHOUT PRIOR NOTICE. IN NO EVENT SHALL FRONTIER OR ITS AGENTS, EMPLOYEES, DIRECTORS, OFFICERS, REPRESENTATIVES OR SUPPLIERS BE LIABLE UNDER CONTRACT, WARRANTY, TORT (INCLUDING BUT NOT LIMITED TO NEGLIGENCE OF FRONTIER), OR ANY OTHER LEGAL THEORY, FOR ANY DAMAGES ARISING FROM OR RELATING TO THIS DOCUMENT OR ITS CONTENTS, EVEN IF ADVISED OF THE POSSIBLITY OF SUCH DAMAGES.

© 2023 Frontier Communications Parent, Inc. All rights reserved.

FACILITIES FOR INTERSTATE ACCESS

Regulations, Rates and Charges Applicable to

Facilities for Interstate Access, Ancillary and Miscellaneous Services

provided by

Frontier Telephone Companies

to Interstate Customers

Services herein are provided by means of wire, fiber optics, radio or any other suitable technology or a combination thereof.

The geographical applications are as indicated following the names of the issuing carriers on Title Page 3.

© 2023 Frontier Communications Parent, Inc. All rights reserved.

ISSUING CARRIERS

Frontier Midstates Inc.
For the States of: Indiana (D)
Michigan (D)

Frontier North Inc.
For the States of: Illinois (D)
Indiana (D)
Michigan (D)
Ohio (D)
Wisconsin (D)

Citizens Telecommunications Company of California, Inc.
For the State of: California

Frontier Communications of the Carolinas LLC
For the States of: Illinois
North Carolina
South Carolina

© 2022 Frontier Communications Parent, Inc. All rights reserved.

FACILITIES FOR INTERSTATE ACCESS

TABLE OF CONTENTS

Page No.

Table of Contents 1

Concurring Carriers 12

Connecting Carriers 12

Other Participating Carriers 12

Registered Service Marks Registered Trademarks 12

Explanation of Symbols 13

Explanation of Abbreviations 13

Reference to Other Tariffs 18

Reference to Other Publications 18

© 2022 Frontier Communications Parent, Inc. All rights reserved

TABLE OF CONTENTS

2. GENERAL REGULATIONS — Page

2.1 Undertaking of the Telephone Company 2-1

2.1.1 Scope 2-1
2.1.2 Limitations 2-1
2.1.3 Liability 2-2
2.1.4 Provision of FIA 2-3
2.1.5 Installation and Termination of FIA 2-3
2.1.6 Maintenance of FIA 2-3
2.1.7 Changes and Substitutions 2-4
2.1.8 Discontinuance and Refusal of FIA 2-4
2.1.9 Preemption of FIA 2-6
2.1.10 Limitation of Use of Metallic Facilities 2-6

2.2 Use 2-7

2.2.1 Interference or Impairment 2-7
2.2.2 Unlawful Use of FIA 2-7
2.2.3 Commingling 2-7

2.3 Obligation of the Customer 2-8

2.3.1 Damages 2-8
2.3.2 Theft 2-8
2.3.3 Equipment Space and Power 2-8
2.3.4 Space and Power for Expanded Interconnection Service 2-8
2.3.5 Availability for Testing 2-8
2.3.6 Balance 2-9
2.3.7 Design of Customer Services 2-9
2.3.8 References to Telephone Company 2-9
2.3.9 Claims and Demands for Damages 2-9
2.3.10 Coordination With Respect to Network Contingencies 2-10
2.3.11 Identification and Rating of VoIP-PSTN Traffic 2-10.1

2.4 Payment Arrangements 2-10.4

2.4.1 Payment of Charges and Deposits 2-10.4
2.4.2 Minimum Periods 2-14

2.5 Connections 2-15

2.5.1 General 2-15
2.5.2 Standard Access Service Connections 2-15

2.6 Definitions 2-16

© 2022 Frontier Communications Parent, Inc. All rights reserved

TABLE OF CONTENTS

2. GENERAL REGULATIONS (Cont'd) Page

2.7 FIA Services Provided By More Than One Telephone Company 2-41

2.7.1 General 2-41
2.7.2 Reserved 2-41
2.7.3 Meet Point Billing 2-41
(A) Reserved 2-41
(B) Multiple Bill Option 2-44
(C) Meet Point Billing Mileage Calculation 2-44
2.7.4 Zone Density Meet Point Billing 2-49
(A) Switched Access 2-49
(B) Special Access 2-49

2.8 Service Level Agreements 2-50

2.8.1 Basic Service Level Agreements (Basic SLAs) 2-50
2.8.2 Reserved For Future Use ..... 2-60 (C)
2.8.3 When a Credit Allowance Does Not Apply 2-87

2.9 Sale or Transfer of an Operating Telephone Company's Assets and/or Stock to an Unaffiliated Third Party. 2-91

2.10 Initial Transfer of Assets from Predecessor Company 2-99

3. ORDERING OPTIONS FOR FIA

3.1 General 3-1

3.1.1 Ordering Conditions 3-1
3.1.2 Provision of Other Services 3-8
3.1.3 Special Construction 3-8

3.2 Access Service Request 3-8.1

3.2.1 Service Date Intervals 3-9
3.2.2 ASR Modifications 3-10
3.2.3 Selection of Facilities for Access Service 3-13
3.2.4 Minimum Period 3-14
3.2.5 Minimum Period Charges 3-15
3.2.6 Cancellation of an ASR 3-16
3.2.7 Discontinuance of Switched Access FGD or BSA-D 3-23

3.3 Access Service Requests For Services Provided By More Than One Telephone Company 3-25

© 2023 Frontier Communications Parent, Inc. All rights reserved

TABLE OF CONTENTS

4. RESERVED PAGE

5. SPECIAL ACCESS

5.1 General 5-1

5.1.1 Rate Elements 5-1
5.1.2 Special Access Configurations 5-8
5.1.3 Special Facilities Routing 5-10
5.1.4 Design Layout Report 5-10
5.1.5 Acceptance Testing 5-10
5.1.6 Ordering Conditions 5-11

5.2 Description of Special Access 5-13

5.2.1 Voiceband 5-14
5.2.2 (Reserved for Future Use) 5-15
5.2.3 Program Audio 5-15
5.2.4 Video Digital Transport Service 5-15
5.2.5 Wideband Analog 5-19
5.2.6 Wideband Data Service 5-19
5.2.7 High Capacity Digital 5-19
5.2.8 DS1/DS3/FiberConnect Enhanced Access Diversity (EAD) 5-22
5.2.9 Digital Data Service 5-24
5.2.10 Bonded Digital Link Service 5-24
5.2.11 Miscellaneous Special Access Services 5-26

5.3 Description of Terminating Options 5-27

5.3.1 Narrowband 5-27
5.3.2 Voice Grade 5-27
5.3.3 Program Audio 5-29
5.3.4 Video Digital Transport Service 5-29
5.3.5 Wideband Data Service 5-29
5.3.6 High Capacity Digital 5-31
5.3.7 Digital Data Service (DDS) 5-32

© 2022 Frontier Communications Parent, Inc. All rights reserved

TABLE OF CONTENTS

5. SPECIAL ACCESS (Cont'd) PAGE

5.4 Description of Supplemental Features 5-33

5.4.1 Bridging 5-33
5.4.2 Conditioning Arrangements - Data 5-34
5.4.3 Conditioning - Program Audio 5-36
5.4.4 Signaling Arrangements 5-36
5.4.5 Echo Control 5-37
5.4.6 Improved Return Loss 5-38
5.4.7 Voiceband Facility Switching Arrangement 5-38
5.4.8 Automatic Protection Switch 5-38
5.4.9 Improved Termination Option 5-39
5.4.10 Improved Equal Level Echo Path Loss Option - ELEPL-2 5-39
5.4.11 Digital Data Service Secondary Channel 5-39

5.5 Description of Multiplexing Arrangements 5-40

5.6 Rate Regulations 5-42

5.6.1 Types of Rates and Charges 5-42
5.6.2 Minimum Periods 5-55
5.6.3 Mileage Measurement 5-55
5.6.4 Moves 5-55
5.6.5 Rates and Charges on an Individual Case Basis 5-56
5.6.6 Hub Wire Centers 5-58
5.6.7 Shared Use Analog and Digital High Capacity Services 5-59
5.6.8 Video Digital Transport Services 5-61
5.6.9 Special Access Surcharge 5-78
5.6.10 Message Station Equipment Recovery Charge 5-79
5.6.11 DS3 High Capacity Service 5-80
5.6.12 Optional Payment Plan (OPP) 5-88
5.6.13 Four-Wire Voiceband and Digital Data Service (DDS) Rate Stability Plan (RSP) 5-92
5.6.14 DS1 Term Volume Plan (TVP) 5-99
5.6.15 E1 (2.048 Mbps) High Capacity Service 5-114
5.6.16 MetroLAN Special Transport 5-115
5.6.17 High Voltage Protection 5-121
5.6.18 LAN Extension Service 5-126
5.6.19 DS3 Term Volume Plan 5-132

© 2022 Frontier Communications Parent, Inc. All rights reserved

TABLE OF CONTENTS

5. SPECIAL ACCESS (Cont'd) PAGE

5.7 Rates and Charges

5.7.1 Nonrecurring Charges 5-146
5.7.2 Voice and Facilities 5-147
5.7.3 Program Audio Facilities 5-172
5.7.4 Video Facilities 5-190
5.7.5 Digital Data Service Facilities 5-262
5.7.5.1 Bonded Digital Link Service 5-283
5.7.6 Multiplexing Arrangements 5-284
5.7.7 High Capacity Digital DS1 (1.544 Mbps) Facilities 5-294
5.7.8 High Capacity Digital FiberConnect (4 X 1.544 Mbps) Facilities 5-304
5.7.9 High Capacity Digital FT1 Facilities 5-308
5.7.10 High Capacity Digital DS3 (44.736) Facilities - Three System 5-326
5.7.11 High Capacity Digital DS3 (44.736 Mbps) Facilities - Unlimited System 5-342
5.7.12 High Capacity Digital DS3 (44.736 Mbps) Facilities – Individual System 5-358
5.7.13 High Capacity Digital DS3 (44.736 Mbps) Facilities - Group Systems 5-366
5.7.14 High Capacity Digital DS3 (44.736 Mbps) Facilities - Special Transport 5-378
5.7.15 High Capacity Digital DS3 (44.736 Mbps) Facilities DS3 Multiplexer 5-391
5.7.16 Reserved 5-393
5.7.17 Reserved 5-396
5.7.18 DS1 Term Volume Plan (TVP) 5-398
5.7.19 High Capacity Digital E1 (2.048 Mbps) Facilities 5-438
5.7.20 High Voltage Protection 5-440
5.7.21 LAN Extension Service 5-442
5.7.22 DS3 Term Volume Plan 5-448

5.8 Miscellaneous Special Access Services 5-453

5.8.1 (Reserved for Future Use) 5-453
5.8.2 (Reserved for Future Use) 5-453
5.8.3 (Reserved for Future Use) 5-453
5.8.4 (Reserved for Future Use) 5-454
5.8.5 Clear Channel Capability 5-454
5.8.6 (Reserved for Future Use) 5-457

5.9 Reserved 5-459

© 2022 Frontier Communications Parent, Inc. All rights reserved

TABLE OF CONTENTS

6. MISCELLANEOUS SERVICES PAGE

6.1 Reserved for Future Use 6-1
6.2 Additional Labor 6-2
6.3 Maintenance of Service Charge 6-12
6.4 Telecommunications Service Priority (TSP) System 6-13
6.5 Balloting and Allocation Process For Equal Access 6-19
6.6 Additional Testing 6-29
6.7 End User/Agent Lists 6-41
6.7.1 Rates and Charges 6-44
6.8 Reserved 6-46
6.9 Denial/Restoral Service 6-50
6.10 Reserved 6-50
6.11 Reserved 6-50
6.12 Reserved 6-51
6.13 Reserved 6-53
6.14 Reserved 6-55
6.15 Reserved 6-57
6.16 Reserved 6-60
6.17 DS1 Span Power 6-61

7. SPECIALIZED FIA OR ARRANGEMENTS
7.1 General 7-1
7.2 Rates and Charges 7-1

8. RESERVED 8-1

9. SPECIAL FACILITIES ROUTING OF FIA

9.1 Description of Special Facilities Routing of FIA 9-1
9.1.1 Diversity 9-1
9.1.2 Avoidance 9-1
9.1.3 Cable-Only Facilities 9-1
9.2 Rates and Charges 9-2
9.2.1 Diversity 9-2
9.2.2 Avoidance 9-6
9.2.3 Diversity and Avoidance Combined 9-7
9.2.4 Cable-Only Facilities 9-8

10. RESERVED FOR FUTURE USE 10-1

11. RESERVED FOR FUTURE USE 11-1

12. RESERVED FOR FUTURE USE 12-1

13. RESERVED FOR FUTURE USE 13-1

© 2022 Frontier Communications Parent, Inc. All rights reserved

14. EXCEPTIONS TO FIA OFFERINGS

14.1 General 14-1
14.1.1 Citizens Telecommunications Company of California, Inc.. 14-1
14.1.2 RESERVED ..... 14-1 (C)

15. RESERVED FOR FUTURE USE 15-1

16. ADVANCED COMMUNICATIONS NETWORKS Page

16.1 (A) General 16-1
(B) Generic Name 16-1
(C) Administrative Changes 16-1
Moves 16-2
16.2 Packet Switching Network Service 16-3
(A) Service Description 16-3
(B) Service Provisioning 16-3
(C) Rate Regulations 16-4
(1) Minimum Period 16-4
(2) Rate Application 16-4
Supplemental Features 16-5
(1) Fast Select 16-5
(2) Priority 16-5
(E) Reserved for Future Use 16-6
(F) Rates and Charges 16-6
(1) X.75 Access 16-6
(2) 9.6 Kbps Port 16-7
(3) 56 Kbps Port 16-8
(4) Supplemental Features 16-9

© 2022 Frontier Communications Parent, Inc. All rights reserved

TABLE OF CONTENTS

PAGE

17. RESERVED 17-1

18. RESERVED 18-1

19 RESERVED 19-1

20. Ethernet Private Line

(A) General 20-1
(B) Description 20-1
(C) Conditions 20-2
Application of Rates and Charges 20-2
(1) Connect 20-4
(a) Single Route Connect 20-4
(b) Dual Route Connect 20-4
(c) Reserved for Future Use 20-4
(d) CO Connect 20-5
(e) Reserved for Future Use 20-5
(f) Reserved for Future Use 20-5
(g) Reserved for Future Use 20-6
(h) Express Connect 20-6
(i) Flex Express Connect 20-7
(j) Custom Connect 20-9
(2) Optical Network Transport 20-16
(a) Reserved for Future Use 20-16
(b) Reserved for Future Use 20-16
(c) Reserved for Future Use 20-16
(d) Reserved for Future Use 20-16
(e) J-SONET Transport 20-16
(f) Banded Optical Transport 20-17
(3) Payload 20-19
(E) Reserved for Future Use 20-20
(F) Reserved for Future Use 20-20
(G) Rate Regulations 20-20
(1) Changes in Length of a TPP 20-20
(2) Renewal Options 20-21
(3) Conversion 20-21
(4) Rate Changes 20-21
(5) Termination Liability 20-21
(6) Termination Without Liability 20-22
(7) Upgrade to Higher Bandwidth 20-23
(8) Change in Interface 20-23
(H) Off-Net Wire Center 20-23
Shared Use 20-23
(J) Reserved for Future Use 20-26
(K) Optical Networking LANs 20-27
(L) Rates and Charges 20-31

© 2022 Frontier Communications Parent, Inc. All rights reserved

TABLE OF CONTENTS

20. Ethernet Private Line (Cont'd) PAGE

20.1 Dedicated SONET Transport Service
(A) General ... 20-281
(B) Terms and Conditions ... 20-281
(C) Service Components ... 20-285
Application of Rates and Charges ... 20-293
(E) Termination Liability ... 20-297
(F) Conversions ... 20-298
(G) Deployment and Availability ... 20-298
(H) Shared Use ... 20-298
Extension of a Commitment Period ... 20-299
(J) Channel Interface Codes ... 20-300
(K) Rates and Charges ... 20-301
(L) Network Management Methods ... 20-397

20.2 Dedicated SONET Ring (DSR)
(A) General ... 20-405
(B) Service Description ... 20-408
(C) Service Components ... 20-421
Application of Rates and Charges ... 20-432
(E) Termination Liability ... 20-434
(F) Conversions ... 20-438
(G) Deployment and Availability ... 20-439
(H) Shared Use ... 20-439
Extension of a Commitment Period ... 20-440
(J) Optional Features ... 20-441
(K) Rates and Charges ... 20-447

20.3 Ethernet Private Line
(A) General ... 20-525
(B) Service Description ... 20-525
(C) Technical Specifications ... 20-531
Terms and Conditions ... 20-531
(E) Rate Regulations ... 20-533
(F) Termination Liability ... 20-533
(G) Channel Interfaces ... 20-536
(H) Rates and Charges ... 20-537

20.4 Dedicated SONET Entrance Facilities
(A) General ... 20-633
(B) IEF Components ... 20-633
(C) Technical Specifications ... 20-635
Terms and Conditions ... 20-636
(E) Application of Rates and Charges ... 20-637
(F) Rates and Charges ... 20-640

© 2022 Frontier Communications Parent, Inc. All rights reserved

TABLE OF CONTENTS

21. RESERVED Page

22. Operating Territories of the Frontier Telephone Companies

22.1 General 22-1
22.2 Operating Territory of Frontier Midstates Inc.. 22-2
22.3 Reserved. 22-4
22.4 Reserved… 22-5
22.5 Operating Territory of Frontier North Inc. 22-6
22.6 RESERVED. 22-17
22.7 Operating Territory of Frontier Communications of the Carolinas LLC. 22-20
22.8 Reserved. 22-23
22.9 Operating Territory of Citizens Telecommunications Company of California, Inc. ..... 22-24.

23. RESERVED
24 Service Components

24.1 Integrated Optical Service Riders ..... 24-1 (D)
24.1.1 General 24-1
24.1.2 Deployment Availability 24-1
24.1.3 Connection to Other Service 24-2
24.1.4 Responsibility of the Customer 24-2
24.1.5 Conversions 24-3
24.1.6 Applications of Rates 24-3
24.1.7 Term Plans 24-3
24.1.8 Expiration of Commitment Period 27-4
24.1.9 Termination Liability 24-4
24.1.10 Minimum Period 24-5
24.1.11 Rates and Charges 24-6

© 2022 Frontier Communications Parent, Inc. All rights reserved

FACILITIES FOR INTERSTATE ACCESS

CONCURRING CARRIERS

NO CONCURRING CARRIERS

CONNECTING CARRIERS

NO CONNECTING CARRIERS

OTHER PARTICIPATING CARRIERS

All Exchange Telephone Companies that have Access Tariffs on file under Part 69 of the Federal Communications Rules and Regulations with which FRONTIER TELEPHONE COMPANIES jointly provide Switched and Special Access Service.

REGISTERED SERVICE MARKS	REGISTERED TRADEMARKS
NONE	NONE

© 2022 Frontier Communications Parent, Inc. All rights reserved

FACILITIES FOR INTERSTATE ACCESS

EXPLANATION OF SYMBOLS

(C)	-	To signify changed regulation
	-	To signify discontinued rate or regulation
	-	To signify increase
	-	To signify matter relocated without change
	-	To signify new rate or regulation
(R)	-	To signify reduction
(S)	-	To signify reissued matter
	-	To signify a change in text but no change in rate or regulation
(Z)	-	To signify a correction

EXPLANATION OF ABBREVIATIONS

ac	-	Alternating current
ACNA	-	Access Customer Name Abbreviation
AML	-	Actual Measured Loss
ANI	-	Automatic Number Identification
ANSI	-	American National Standard Institute
AP	-	Program Audio
ARC	-	Access Recovery Charge
AT&T-C	-	AT&T Communications
ATSC	-	Advanced Television Systems Committee

© 2022 Frontier Communications Parent, Inc. All rights reserved

EXPLANATION OF ABBREVIATIONS (Cont'd)

BAN – Billing Account Number
BHMC - Busy Hour Minutes of Capacity
BP - Billing Percentage
BSA - Basic Serving Arrangement
BSE - Basic Service Element
CAC - Carrier Access Code
CCS - Centum Call-Seconds
CCSA - Common Control Switching Arrangement(s)
CDL - Customer Designated Location
CDM - Call Days in Month
CFA – Connecting Facility Assignment
CIC - Carrier Identification Code
CIP - Carrier Identification Parameter
CLO – Control Link Oscillator
CMF – Chargeable Minimum Factor
CNM – Customer Network Management Optional Feature
COMPS - Central Office Maintenance Planning System
Cont'd – Continued
CSM – Customer Service Management Optional Feature
CST – Cooperative Scheduled Testing
CSU - Circuit Switching Unit
C-TISC - Conversion Time-In-Service Credit
DA - Digital Data Access
DAM - Distance in Airline Miles
dB – Decibel
dBm - Decibels below one milliwatt
dBmO – Transmission Level Referred to the Zero Transmission Level Point
dBrnCO - Decibel Reference Noise C-Message Weighted O
dBv - Decibels Referred to One Volt
dc - direct current
DDS - Digital Data Service
DTM – Direct TL1 Monitoring Optional Feature
DTMF - Dual Tone Multifrequency
DX – Duplex
DWDM – Dense Wave Division Multiplexing

© 2022 Frontier Communications Parent, Inc. All rights reserved

EXPLANATION OF ABBREVIATIONS (Cont'd)

ECCKT - Exchange Carrier Circuit ID
ELEPL - Equal Level Echo Path Loss
E&M - The Receive and Transmit Leads of a Signaling System
EML - Expected Measured Loss
EPL - Echo Path Loss
ERL - Echo Return Loss
ESCON – Enterprise Systems CONnection
f - frequency
FCC - Federal Communications Commission
FCO - Foreign Central Office Service
FIA - Facilities for Interstate Access
FICON – Fibre CONnection
FNPA - Foreign Numbering Plan Area
GTOC - Operating Telephone Companies of GTE Corporation
GSEC - General Services and Equipment Code
HC - High Capacity
HNPA - Home Numbering Plan Area
Hz - Hertz
IA - Interface Arrangement
IC - Interexchange Carrier
ICB - Individual Case Basis
IDDD - International Direct Distance Dialing
ILP - Initial Liability Period
DSOTS – Dedicated Sonet Optical Transport Service
IP - Interconnection Point
ISC – InterSystem Channel
kbps - kilobits per second
kHz - kilohertz
LATA - Local Access and Transport Area
LEC - Local Exchange Carrier
Ma - Milliamperes
Mbps - Megabits per second
MHz - Megahertz
MJU - Multi-Junction Unit
MRC - Monthly Recurring Charge
MST - Manual Scheduled Testing
MTL - Maximum Termination Liability
NA - Not Available
NANP - North American Numbering Plan

NECA - National Exchange Carrier Association
N-MSA – Non Qualifying Metropolitan Statistical Area
NMM – Network Management Methods
NG-ADM − Next Generation Add/Drop Multiplexing
NPA - Numbering Plan Area
NRC - Nonrecurring Charge
NST - Nonscheduled Testing
NXX - Three Digit Central Office Code

© 2022 Frontier Communications Parent, Inc. All rights reserved

EXPLANATION OF ABBREVIATIONS (Cont'd)

OC-n - Optical Carrier Rate
OPS - Off-Premises Station
PBX - Private Branch Exchange
PCM - Pulse Code Modulation
PON - Purchase Order Number
POT - Point of Termination
RMC - Recurring Monthly Charge
rms - root-mean-square
RPON – Related Purchase Order Number
SAL - Special Access Line
SASG – Special Access Service Guarantee
SCFA - Secondary Connecting Facility Assignment
SED - Service Establishment Date
SF - Single Frequency
SLA – Service Level Agreement
SONET - Synchronous Optical Network
SPNP – Service Provider Number Portability
SRL - Singing Return Loss
STR - Switched Transport Rate
STS1 − Synchronous Transport Signal 1
STS1-nV − Synchronous Transport Signal 1 with Virtual Concatenation
TDCF - Total Day Conversion Factor
TISC - Time-In-Service Credit
TLP - Transmission Level Point
TV - Television
TVP - Term Volume Plan
UL - Under Utilization Liability
VG - Voice Grade
V&H - Vertical & Horizontal
WA - Wideband Analog
WATS - Wide Area Telecommunications Service

© 2022 Frontier Communications Parent, Inc. All rights reserved

EXPLANATION OF ABBREVIATIONS (Cont'd)
STATE ABBREVIATIONS

AL - Alabama
AK - Alaska
AR - Arkansas
AZ - Arizona
CA - California
CO - Colorado
CT - Connecticut
DE - Delaware
FL - Florida
GA - Georgia
HI - Hawaii
IA - Iowa
ID - Idaho
IL - Illinois
IN - Indiana
KS - Kansas
KY - Kentucky
LA - Louisiana
MA - Massachusetts
MD - Maryland
ME - Maine
MI - Michigan
MN - Minnesota
MO - Missouri
MS - Mississippi
MT - Montana

NE - Nebraska
NC - North Carolina
ND - North Dakota
NH - New Hampshire
NJ - New Jersey
NM - New Mexico
NV - Nevada
NY - New York
OH - Ohio
OK - Oklahoma
OR - Oregon
PA - Pennsylvania
RI - Rhode Island
SC - South Carolina
SD - South Dakota
TN - Tennessee
TX - Texas
UT - Utah
VA - Virginia
VT - Vermont
WA - Washington
WI - Wisconsin
WV - West Virginia
WY - Wyoming

© 2022 Frontier Communications Parent, Inc. All rights reserved

REFERENCE TO OTHER TARIFFS

Whenever reference is made in this Guide to other tariffs, the reference is to the tariffs in force as of the effective date of this Guide, and to amendments thereto and successive issues thereof.

The following tariff is referenced in this Guide and may be obtained from the National Exchange Carrier Association, 80 South Jefferson Road, Whippany, NJ 07981-1009, 800-228-8597, or on the Internet at www.neca.org.

National Exchange Carrier Association, Inc. (NECA)
Tariff F.C.C. No. 4

REFERENCE TO OTHER PUBLICATIONS

The following technical publications are referenced in this Guide and may be obtained from the National Exchange Carrier Association, Inc., 80 South Jefferson Road, Whippany, NJ 07981-1009 or in electronic format on the Internet at www.neca.org.

PUB AS No. 1, ISSUE II Access Service
Issued: May 1984

PUB AS No. 1, ISSUE II Access Service Addendum
Issued: March 1987

The following technical publications are referenced in this Guide and may be obtained from Testmark Labs, 3050 Harrodsburg Rd., Lexington, Kentucky 40503.

GTE Technical Interface Reference Manual, Issue 2; Sections 3300, 6000, 6103, and 7000
Issued: August 1984, Revised December 1985, August 1986, and October 1988

GTE Telephone Companies - Traffic Grade of Service Standards
Issued: April 1985; entire issue

© 2022 Frontier Communications Parent, Inc. All rights reserved

REFERENCE TO OTHER PUBLICATIONS (Cont'd)

The following technical publications are referenced in this Guide and may be obtained from the Alliance for Telecommunications Industry Solutions (ATIS), 1200 G Street NW, Suite 500, Washington, DC 20005, or on the Internet at www.atis.org.

Multiple Exchange Carrier Access Billing (MECAB) Guidelines, ATIS/OBF – MECAB 009, Issue 9
Issued: January 2007

Multiple Exchange Carrier Ordering and Design (MECOD) Guidelines, ATIS – 0404120-0007, Issue 7
Issued: April 2009

The following technical publications are referenced in this Guide and may be obtained from Telcordia Technologies Inc., Customer Service, One Telcordia Drive, RRC 1B-180, Piscataway, NJ 08854-4156, 866-672-6997, or on the Internet at www.telcordia.com.

GR-63-CORE, Issue 3
Issued: March 2006

GR-253-CORE, Issue 4
Issued: December 2005

GR-320-CORE, Issue 1
Issued: August 2003

GR-487-CORE, Issue 3
Issued: April 2009

GR-499-CORE, Issue 3
Issued: September 2004

GR-905-CORE, Issue 11
Issued: December 2008

GR-1089-CORE, Issue 4
Issued: June 2006

GR-1149-CORE, Issue 7
Issued: December 2008

GR-1312-CORE, Issue 3
Issued: April 1999

GR-1374-CORE, Issue 1
Issued: December 1994

© 2022 Frontier Communications Parent, Inc. All rights reserved

REFERENCE TO OTHER PUBLICATIONS (Cont'd)

GR-1400-CORE, Issue 3
Issued: July 2006

GR-2918-CORE, Issue 6
Issued: January 2003

GR-2979-CORE, Issue 5
Issued: March 2005

Network Equipment Building System (NEBS), SR-3580, Issue 3
Issued: June 2007

SR-TAP-000191, Issue 2
Issued: December 1989

The following technical publications are referenced in this Guide and may be obtained from American National Standards Institute (ANSI), 25 West 43rd Street, 4th Floor, New York, NY 10036 or on the Internet at www.ansi.org.

ANSI T1.102 - 1993 (R2005) Digital Hierarchy Electrical Interfaces Issued: 2005

ANSI T1.105.01 – 2000 (R2005) Synchronous Optical Network (SONET) - Basic Description Including Multiplex Structure, Rates and Formats Issued: 2005

ANSI T1.107 – 2002 (R2006) Digital Hierarchy - Format Specifications Issued: 2006

ANSI INCITS 148-1998 (R2004) Information Systems - Fiber Distributed Data Interface (FDDI) - Token Ring Physical Layer Protocol (PHY) Issued: 2004

ANSI INCITS 166-1989 (R2005) Information Systems - Fibre Data Distributed Interface (FDDI) - Token Ring Physical Layer Medium Dependent (PMD) Issued: 2005

ANSI INCITS 296-1997 (R2007) Information Technology – Single-Byte Command Code Sets Connection (SBCON) Architecture Issued: 2007

ANSI INCITS 303 – 1998 (R2003) Third Generation Fibre Channel Physical and Signaling Interface-3 (FC-PH-3) Issued: 2003

© 2022 Frontier Communications Parent, Inc. All rights reserved

REFERENCE TO OTHER PUBLICATIONS (Cont'd)

The following technical publications are referenced in this Guide and may be obtained from the Institute of Electrical and Electronics Engineers, Inc., IEEE Standards Association, 445 Hoes Lane, PO Box 1331, Piscataway, NJ, 08855-1331, or on the Internet at www.ieee.org.

IEEE 802.3-2005/Cor2/D2.0-2007 Telecommunications and information exchange between systems-Local and Metropolitan Area Networks-Specific Requirements-Part 3
Issued: August 2007

IEEE 802.3u-1995 Supplement to Standard for Information Technology-Local and Metropolitan Area Networks, Part 3
Issued: October 1995

IEEE 802.3z-1998 Supplement to Standard for Information Technology-Local and Metropolitan Area Networks, Part 3
Issued: 1998

IEEE 802.3ae-2002 Supplement to Standard for Information Technology-Local and Metropolitan Area Networks, Part 3
Issued: August 2002

The following technical publications are referenced in this Guide and may be obtained from the Internet Engineering Task Force (IETF) at IETF Secretariat, c/o Association Management Solutions, LLC (AMS), 48377 Fremont Blvd., Suite 117, Fremont, California 94538, or on the Internet at www.ietf.org.

STD 0001, Internet Official Protocol Standards, J. Postel, Editor
Issued: May 2008

RFC 2138, Remote Authentication Dial-In User Service (RADIUS), C. Rigney, A. Rubens, W. Simpson, S. Willens
Issued: April 1997

The following publications are referenced in this Guide and may be obtained from the Government Printing Office, Superintendent of Documents, Document Control Branch, 941 N. Capitol St., N.E., Washington, D.C. 20401.

Telecommunications Service Priority (TSP) System for National
Security Emergency Preparedness (NSEP) Service Vendor Handbook,
National Communications System (NCS) H 3-1-2
Issued: December 2000

Telecommunication Service Priority (TSP) System for National
Security Emergency Preparedness (NSEP) Service User Manual,
National Communications System (NCS) M 3-1-1
Issued: May 2000

© 2022 Frontier Communications Parent, Inc. All rights reserved

REFERENCE TO OTHER PUBLICATIONS (Cont'd)

The following technical publication is referenced in this Guide and may be obtained from the Society of Motion Picture and Television Engineers (SMPTE), 3 Barker Avenue, 5th Floor, White Plains, NY 10601, (914)761-1100, or on the Internet at www.smpte.org.

SMPTE 0259M-2008
Issued: 2008

The following publications referenced in this Guide may be obtained from IBM North America, 590 Madison Avenue, New York, NY 10022; 1-800-426-4968 or on the Internet at www.ibm.com/us. Note: ESCON® is a registered trademark of the International Business Machines (IBM) Corporation.

Enterprise Systems Architecture/390 ESCON I/O Interface, Physical Layer (Seventh Edition)
SA23-0394-06 Issued: July 2008
Coupling Facility Channel Physical Layer (Sixth Edition)
SA23-0395-05 Issued: July 2008
S/390 Time Management and IBM 9037 Sysplex Timer
SG24-2070-00 Issued: May 1999
Planning Fiber Optic Channel Links (Thirteenth Edition)
GA23-0367-12 Issued: July 2009
OS/390 Parallel Sysplex Configuration Volume 2: Cookbook
SG24-5638-00 Issued: August 2000

The following technical publications are referenced in this Guide and may be obtained from International Telecommunications Union (ITU), Place des Nations, CH-1211, Geneva 20, Switzerland or on the Internet at www.itu.int.net

Optical Interfaces for Multichannel Systems with Optical Amplifiers, ITU-T G.692
Issued: October 1998, Amendment 1 January 2005

Optical Transport Network Physical Layer Interfaces, ITU-T G.959.1
Issued: December 2003

© 2022 Frontier Communications Parent, Inc. All rights reserved

REFERENCE TO OTHER PUBLICATIONS (Cont'd)

The following technical publication is referenced in this Guide and may be obtained from Frontier Carrier Services, 1919 MCKINNEY AVE, DALLAS TX 75201. (T)

Technical Memorandum for Incidental InterLATA Call Management Signaling Service associated with the Verizon FCC Short Term Notice of Network Change
Issued: March 2007

The following technical publication is referenced in this Guide and may be obtained from Telcordia Routing Administration, 8 Corporate Place PYA 3N-141, Piscataway, NJ 08854-4156, 1(866) 672-4156.

The Local Exchange Routing Guide (LERG)
Issued: August 1, 2009, and as issued from time to time

The following publication is referenced in this Guide and may be obtained from the COMM 2000, 1414 Brook Drive, Downers Grove, IL 60515 (888)-UL33503 or on the Internet at www.comm-2000.com.

UL 94, Edition 5 Issued: October 1996

The following technical publication is referenced in this Guide and may be obtained from the Telecommunications Industry Association, 2500 Wilson Blvd., Suite 300, Arlington, VA 22201.

Electrical Performance for Television Transmission Systems (EIA/TIA-250-C)
Issued: February 1990

© 2022 Frontier Communications Parent, Inc. All rights reserved

2. GENERAL REGULATIONS (Cont'd)

2.1 Undertaking of the Telephone Company

2.1.1 Scope

(A) The Telephone Company does not undertake to transmit calls or offer a telecommunications service under this Guide.

(B) The Telephone Company shall be responsible only for the installation, operation, and maintenance of the services which it provides.

(C) The Telephone Company will, for maintenance purposes, test its FIA only to the extent necessary to detect and/or clear troubles. Testing beyond normal parameters will be done as described in Section 6.

FIA are provided twenty-four hours daily, seven days per week.

2.1.2 Limitations

(A) The customer may not assign or transfer the use of FIA provided under this Guide except that, where there is no interruption of use or relocation of the FIA, such assignment or transfer may be made to:

- another customer, whether an individual, partnership, association or corporation, provided the assignee or transferee assumes all outstanding indebtedness for such FIA, and the unexpired portion of the minimum period and the termination liability applicable to such FIA, if any; or

- a court appointed receiver, trustee or other person acting pursuant to law in bankruptcy, receivership, reorganization, insolvency, liquidation or other similar proceedings, provided the assignee or transferee assumes the unexpired portion of the minimum period and the termination liability applicable to such FIA, if any.

In all cases of assignment or transfer, the written acknowledgment of the Telephone Company is required prior to such assignment or transfer which acknowledgment shall be made within 15 days from the receipt of notification. All regulations and conditions contained in this Guide shall apply to such assignee or transferee.

The assignment or transfer of FIA does not relieve or discharge the assignor or transferor from remaining jointly or severally liable with the assignee or transferee for any obligations existing at the time of the assignment or transfer.

(B) The emergency provisioning and restoration of FIA shall be in accordance with Part 64, Subpart D, Paragraph 64.401, of the FCC's Rules and Regulations, which specifies the priority system for such activities. Section 6.4 describes the service arrangement.

© 2022 Frontier Communications Parent, Inc. All rights reserved

2. GENERAL REGULATIONS (Cont'd)

2.1 Undertaking of the Telephone Company (Cont'd)

2.1.2 Limitations (Cont'd)

(C) The Telephone Company does not warrant that its facilities and services meet standards other than those in this Guide.

2.1.3 Liability

(A) The Telephone Company's liability, if any, for willful misconduct is not limited by this Guide. With respect to any other claim or suit by a customer for damages associated with the installation, provision, termination, maintenance, repair or restoration of FIA, and subject to the provisions of (B) and (C), the Telephone Company's liability, if any, shall not exceed an amount equal to the proportionate charge for the FIA for the period during which the provision of FIA was affected. This liability for damages shall be in addition to any amounts that may otherwise be due the customer under this Guide as a credit allowance for a provision of FIA interruption.

(B) The Telephone Company shall not be liable for any act or omission of any other carrier or customer providing a portion of a service, nor shall the Telephone Company, for its own act or omission, hold liable any other carrier or customer providing a portion of a service.

(C) The Telephone Company shall be indemnified, defended and held harmless by the customer against any claim, loss or damage arising from the use of FIA offered under this Guide. The foregoing indemnity shall issue on the customer separately, each being responsible for its own acts and omissions, involving:

- Claims for libel, slander, invasion of privacy, or infringement of copyright arising from any communications;

- Claims for patent infringement arising from combining or using the FIA furnished by the Telephone Company in connection with facilities or equipment furnished by the customer; or

- All other claims arising out of any act or omission of the customer in the course of using FIA provided pursuant to this Guide.

The Telephone Company does not guarantee or make any warranty with respect to its FIA when used in an explosive atmosphere. The Telephone Company shall be indemnified, defended and held harmless by the customer from any and all claims by any person relating to the FIA so provided. The foregoing indemnity shall issue on the customer separately, each being responsible for its own acts and omissions.

(E) Except in the case of willful misconduct, under no circumstances whatever shall the Telephone Company be liable for indirect, incidental, special or consequential damages; and this disclaimer shall be effective notwithstanding any other provisions hereof.

© 2022 Frontier Communications Parent, Inc. All rights reserved

2. GENERAL REGULATIONS (Cont'd)

2.1 Undertaking of the Telephone Company (Cont'd)

2.1.3 Liability (Cont'd)

(F) No license under patents is granted by the Telephone Company to the customer or shall be implied or arise by estoppel in the customer's favor with respect to any circuit, apparatus, system or method used by the customer in connection with FIA provided under this Guide. With respect to claims of patent infringement made by third persons, the Telephone Company will defend, indemnify, protect and save harmless the customer from and against all claims arising out of the use by the customer of FIA provided under this Guide.

(G) The Telephone Company's failure to provide or maintain FIA under this Guide shall be excused by labor difficulties, governmental orders, civil commotions, acts of God and other circumstances beyond the Telephone Company's reasonable control, subject to the interruption allowance provisions.

(H) The Telephone Company shall reimburse the customer for damages to premises or equipment of the customer resulting from the provision of FIA by the Telephone Company on such premises, or by the installation or removal thereof, caused by the negligence or willful act of the Telephone Company.

2.1.4 Provision of FIA

(A) The Telephone Company, to the extent that such FIA are or can be made available with reasonable effort, and after provisions have been made for the Telephone Company's local service, will provide to the customer, upon reasonable notice, FIA offered in other applicable sections of this Guide at rates and charges specified therein.

(B) FIA provided to a customer under this Guide may be connected directly to customer facilities and/or may be connected to access facilities of another telephone company or companies in the joint provision of interstate access.

2.1.5 Installation and Termination of FIA

Except as provided for Expanded Interconnection Service specified in Section 17, the FIA provided under this Guide (A) will include any entrance cable or drop wiring and wire or intrabuilding cable to that point where provision is made for termination of the Telephone Company's outside distribution network facilities at a suitable location inside a customer designated location, and (B) will be installed by the Telephone Company to such point of termination.

2.1.6 Maintenance of FIA

(A) The FIA provided under this Guide shall be maintained by the Telephone Company. The customer or others may not rearrange, move, disconnect, remove or attempt to repair any FIA provided by the Telephone Company, other than by connection or disconnection to any interface means used, except with the written consent of the Telephone Company.

(B) Customer provided transmission facilities and equipment terminating in the Telephone Company wire center, access tandem, manhole or similar location for purposes of virtual Expanded Interconnection Service (EIS), as set forth in Section 17, will be maintained by the Telephone Company. Customer provided transmission facilities and equipment terminating in the Telephone Company wire center or access tandem for purposes of physical EIS will not be maintained by the Telephone Company.

© 2022 Frontier Communications Parent, Inc. All rights reserved

2. GENERAL REGULATIONS (Cont'd)

2.1 Undertaking of the Telephone Company (Cont'd)

2.1.7 Changes and Substitutions

Except as provided for equipment and systems subject to Part 68 of the FCC Rules and Regulations in 47 C.F.R. Paragraph 68.110 (b), the Telephone Company may, where such action is reasonably required in the operation of its business, substitute, change, or rearrange any telephone plant used in providing FIA under this Guide, change minimum network protection criteria, change operating or maintenance characteristics of facilities, or change operations or procedures of the Telephone Company. In case of any such substitution, change or rearrangement, the facility parameters will be within generally accepted standards. The Telephone Company shall not be responsible if any such substitution, change or rearrangement renders any customer furnished services obsolete or requires modification or alteration thereof or otherwise affects their use or performance. If such substitution, change, or rearrangement materially affects the operating characteristics or technical parameters of the FIA, as originally ordered by the customer, the Telephone Company will notify the customer in writing prior to making such substitution, change or rearrangement. Notification will be given as follows:

- Should a major change occur, the Telephone Company shall notify the customer at least one year in advance. A major change is described as any change in telephone plant which will affect the technical parameters of the interface (e.g., level, impedance, signaling, interface, bandwidth, two-wire, four-wire, etc.).

- Should a minor change occur, the Telephone Company shall notify the customer at least thirty days in advance. A minor change is described as any change in telephone plant which will not affect the technical parameters of the interface (e.g., level, impedance, signaling, interface, bandwidth, two-wire, four-wire, etc.).

The Telephone Company will work cooperatively with the customer relative to the redesign and implementation required by the change in operating characteristics.

2.1.8 Discontinuance and Refusal of FIA

(A) Unless the provisions of 2.2.1(B) or 2.5.1 apply, if the customer fails to comply with the provisions of 2.1.6, 2.3.1, and 2.4.1, or if applicable, 2.5.3, 2.5.4, 17.3.4 and 17.7.6 including any payments to be made by it on the dates or at the times herein specified, and fails within thirty (30) days after written notice, by certified mail, from the Telephone Company to a person designated by the customer to correct such noncompliance, the Telephone Company may discontinue the provision of the FIA to the noncomplying customer. In case of such discontinuance, all applicable charges shall become due.

(B) If the customer repeatedly fails to comply with the provisions of this Guide in connection with the provision of a FIA or group of FIA, and fails to correct such course of action after notice as in (A), the Telephone Company may refuse applications for additional FIA to the noncomplying customer until the course of action is corrected.

© 2022 Frontier Communications Parent, Inc. All rights reserved

2. GENERAL REGULATIONS (Cont'd)

2.1 Undertaking of the Telephone Company (Cont'd)

2.1.8 Discontinuance and Refusal of FIA (Cont'd)

(C) In addition to and not in limitation of the provisions of 2.1.8(A) and 2.1.8(B), unless the provisions of 2.2.1(B) or 2.5.1 following apply, if a customer fails to comply with 2.4.1(A) or 2.4.1 following, including any bill payments to be made by it on the dates and times herein specified, the Telephone Company may take the actions specified in sections 2.1.8(A) and 2.1.8(B) with regard to services provided hereunder to that customer on fifteen (15) calendar days written notice, such notice period to start the day after the notice is sent by Overnight Delivery, if the customer has not complied with respect to amounts due in a subject bill and either:

(1) the Telephone Company has sent the subject bill to the customer within seven (7) business days from the bill date: or

(2) the Telephone Company has sent the subject bill to the customer more than thirty (30) calendar days before the notice under this section is given.

In all other cases, the Telephone Company will give thirty (30) calendar days written notice pursuant to 2.1.8 (A) or 2.1.8(B). The Telephone Company will maintain records sufficient to validate the date upon which a bill was sent to a customer. Action will not be taken as specified in 2.1.8(A) or 2.1.8(B) with regard to the subject bill if the customer cures the noncompliance prior to the expiration of the fifteen (15) or thirty (30) days notice period, as applicable.

If the Telephone Company provided notice pursuant to 2.1.8(A), (B), or (C) preceding, does not refuse additional applications for FIA service or discontinue the provision of the FIA services on the date specified, and the customer's noncompliance continues, nothing contained herein shall preclude the Telephone Company's right to refuse additional applications for FIA service or to discontinue the provision of the FIA services, including the provision of Physical or Virtual Expanded Interconnection services.

(E) If notice is given by Overnight Delivery under this section, it shall be preformed by a reputable overnight delivery service such as, or comparable to, the U.S. Postal Service Express Mail, United Parcel Service, or Federal Express.

(F) The provisions of 2.1.8(A), (B), or (C) shall not apply to charges that customer does not pay based on submission of a good faith dispute pursuant 2.4.1(2).

© 2022 Frontier Communications Parent, Inc. All rights reserved

2. GENERAL REGULATIONS (Cont'd)

2.1 Undertaking of the Telephone Company (Cont'd)

2.1.9 Preemption of FIA

In certain instances, i.e., when spare facilities and/or equipment are not available, it may be necessary to preempt existing services to provision or restore National Security Emergency Preparedness (NSEP) Services. If, in its best judgment, the Telephone Company deems it necessary to preempt, then the Telephone Company will ensure that:

(A) A sufficient number of public switched services are available for public use if preemption of such services is necessary to provision or restore NSEP Service.

(B) The service(s) preempted have a lower or do not contain NSEP assigned priority levels.

(C) A reasonable effort is made to notify the preempted service customer of the action to be taken.

A credit allowance for any preempted service shall be made in accordance with the provisions in Section 2.8.1.1.

2.1.10 Limitation of Use of Metallic Facilities

Except for loop and duplex (DX) type signaling, metallic facilities shall not be used for ground return or split pair operation. Signals applied to the metallic facility shall conform to minimum protection criteria for direct electrical connections as in Part 68 of the FCC Rules and Regulations. In the case of applications of dc telegraph signaling systems, the customer shall be responsible, at its expense, for the provision of current limitation devices to protect the Telephone Company FIA from excessive current due to abnormal conditions and for the provision of noise mitigation networks when required to reduce excess noise.

Interoffice metallic facilities are limited and requests for metallic facilities will only be provided where available. DC (Metallic) and telegraph-grade facilities and services will be discontinued effective November 3, 1991. Interoffice metallic facilities (wire pairs) are in diminishing supply, and can be expected to become less available as optical fiber is deployed and wire cables are removed.

© 2022 Frontier Communications Parent, Inc. All rights reserved

2. GENERAL REGULATIONS (Cont'd)

2.2 Use

2.2.1 Interference or Impairment

(A) The characteristics and methods of operation of any circuits, facilities or equipment provided by other than the Telephone Company, including customer transmission equipment and facilities used with EIS, and associated with the FIA provided under this Guide shall not interfere with or impair service over any facilities of the Telephone Company, its connecting and concurring carriers, or other telephone companies involved in its services, cause damage to their plant, impair the privacy of any communications carried over their facilities or create hazards to their employees or to the public.

(B) Except as provided for equipment or systems subject to Part 68 of the FCC Rules and Regulations in 47 C.F.R. Paragraph 68.108, if such characteristics or methods of operation are not in accordance with (A), the Telephone Company will, where practicable, notify the customer, as appropriate, that temporary discontinuance of the use of FIA may be required; however, where prior notice is not practicable, nothing contained herein shall be deemed to preclude the Telephone Company's right to temporarily discontinue forthwith the use of FIA if such action is reasonable in the circumstances. In case of such temporary discontinuance the customer will be promptly notified and afforded the opportunity to correct the condition which gave rise to the temporary discontinuance. During such period of temporary discontinuance, credits as set forth in Section 2.8 following, are not applicable.

2.2.2 Unlawful Use of FIA

The FIA are furnished subject to the condition that they will not be used for an unlawful purpose. FIA will be discontinued if any law enforcement agency, acting within its apparent jurisdiction, advises in writing that such FIA are being used in violation of law. The Telephone Company will refuse to furnish FIA when it has reasonable grounds to believe that such FIA will be used in violation of law.

2.2.3 Commingling

Except as provided in Section 51.318 of the Federal Communications Commission's rules, telecommunications carriers who obtain unbundled network elements or combinations of unbundled network elements pursuant to a Statement of Generally Available Terms, under Section 252 of the Act, or pursuant to an interconnection agreement with the Telephone Company, may connect, combine, or otherwise attach such unbundled network elements or combinations of unbundled network elements to access services purchased under this Guide except to the extent such agreement (1) expressly prohibits such commingling; or (2) does not address commingling and the requesting carrier has not negotiated an interconnection agreement (or amendment) expressly permitting such commingling. The rates, terms and conditions of this Guide will apply to the access services that are commingled. Unbundled network elements or combinations of unbundled network elements that are commingled with access services do not constitute a shared use arrangement as set forth in this Guide, and are therefore not eligible for adjustment of charges under such provisions.

© 2022 Frontier Communications Parent, Inc. All rights reserved

2. GENERAL REGULATIONS (Cont'd)

2.3 Obligation of the Customer

2.3.1 Damages

The customer shall reimburse the Telephone Company for damages to the Telephone Company facilities utilized to provide FIA under this Guide caused by:

- the negligence or willful act of the customer, or
- resulting from the customer's improper use of the Telephone Company facilities, or
- due to malfunction of any facilities or equipment provided by other than the Telephone Company.

Nothing in the foregoing provision shall be interpreted to hold one customer liable for another customer's actions. The Telephone Company will, upon reimbursement for damages, cooperate with the customer in prosecuting a claim against the person causing such damage and the customer shall be subrogated to the right of recovery by the Telephone Company for the damages to the extent of such payment. The amount of reimbursement shall be the actual cost of repair to the damaged facilities including labor costs as specified in 6.2(G).

2.3.2 Theft

The customer shall reimburse the Telephone Company for any loss through theft of facilities, apparatus, or equipment utilized to provide FIA under this Guide at the customer designated location or at the end user's premises. The amount of reimbursement shall be the actual cost for replacement of facilities, apparatus, or equipment lost, plus labor costs as specified in 6.2(G).

2.3.3 Equipment Space and Power

Except as specified in 2.3.4, the customer shall furnish or arrange to have furnished to the Telephone Company at no charge, equipment space and electrical power required by the Telephone Company to provide FIA under this Guide at the points of termination of such FIA. The equipment space provided shall meet industry standard environmental conditions. The selection of ac or dc power shall be mutually agreed to by the customer and the Telephone Company. The customer shall also make necessary arrangements in order that the Telephone Company will have access to such spaces at reasonable times for installing, repairing or removing facilities of the Telephone Company.

2.3.4 Space and Power for Expanded Interconnection Service

Where available, the Telephone Company shall make available wire center or access tandem floor space and electrical power required by the customer for the provision of Expanded Interconnection Service at charges set forth in Section 17.

2.3.5 Availability for Testing

The FIA provided under this Guide shall be available to the Telephone Company at times mutually agreed upon in order to permit the Telephone Company to make tests and adjustments appropriate for maintaining the FIA in satisfactory operating condition. Such tests and adjustments shall be completed within a reasonable time. No credit will be allowed for any interruptions involved during such tests and adjustments.

© 2022 Frontier Communications Parent, Inc. All rights reserved

2. GENERAL REGULATIONS (Cont'd)

2.3 Obligation of the Customer (Cont'd)

2.3.6 Balance

All signals for transmission over the FIA provided under this Guide shall be delivered by the customer balanced to ground except for ground start and duplex (DX), McCulloh-loop (alarm system) type signaling, and dc telegraph transmission at speeds of 75 baud or less.

2.3.7 Design of Customer Services

Subject to the provisions of 2.1.7, the customer shall be solely responsible at its expense for the overall design of its services. The customer shall be responsible at its own expense, for any redesigning or rearrangement of its services which may be required because of changes in FIA, operations or procedures of the Telephone Company, minimum network protection criteria or operating or maintenance characteristics of the FIA.

2.3.8 References to Telephone Company

The customer may advise its end users that certain FIA are provided by the Telephone Company in connection with the service the customer furnishes to its end user; however, the customer shall not represent that the Telephone Company jointly participates in the customer's services.

2.3.9 Claims and Demands for Damages

(A) With respect to claims of patent infringement made by third persons, the customer shall defend, indemnify, protect and save harmless the Telephone Company from and against all claims arising out of the combining with, or use in connection with, the FIA provided under this Guide, any circuit, apparatus, system or method provided by the customer, the IC or its end users.

(B) The customer shall defend, indemnify and save harmless the Telephone Company from and against suits, claims, and demands by third persons arising out of the construction, installation, operation, maintenance, or removal of the customer's circuits, facilities, or equipment connected to the Telephone Company's FIA provided under this Guide including, without limitation, Workmen's Compensation claims, actions for infringement of copyright and/or unauthorized use of program material, libel and slander actions based on the content of communications transmitted over the customer's circuits, facilities or equipment, and proceedings to recover taxes, fines, or penalties for failure of the customer to obtain or maintain in effect any necessary certificates, permits, licenses or other authority to acquire or operate the FIA provided under this Guide; provided, however, the foregoing indemnification shall not apply to suits, claims, and demands to recover damages for damage to property, death, or personal injury unless such suits, claims or demands are based on the tortuous conduct of the customer, its officers, agents or employees.

© 2022 Frontier Communications Parent, Inc. All rights reserved

2. GENERAL REGULATIONS (Cont'd)

2.3 Obligation of the Customer (Cont'd)

2.3.10 Coordination With Respect to Network Contingencies

The customer shall, in cooperation with the Telephone Company, coordinate in planning the actions to be taken to maintain maximum network capability following natural or man-made disasters which affect telecommunications services.

2.4 Payment Arrangements

2.4.1 Payment of Charges and Deposits

(A) The Telephone Company may, in order to safeguard its interests, require a customer, which has a proven history of late payments to the Telephone Company or does not have established credit, to make a deposit prior to or at any time after the provision of the FIA to the customer to be held by the Telephone Company as a guarantee of the payment of rates and charges. The Telephone Company will notify the customer of a deposit requirement by Overnight Delivery. The customer will be required to make payment of such deposit prior to the provision of service in those cases where the customer has not established credit with the Telephone Company, or otherwise within fifteen (15) business days of such notice. Such notice to start the day after the notice is sent by Overnight Delivery. No such deposit will be required of a customer which is a successor of a company which has established credit and has no history of late payments to the Telephone Company.

A deposit may not exceed the actual or estimated rates and charges for the FIA for a two month period. The fact that a deposit has been made in no way relieves the customer from complying with the Telephone Company's regulations as to the prompt payment of bills.

At such time as the provision of the FIA to the customer is terminated, the amount of the deposit will be credited to the customer's account and any credit balance which may remain will be refunded. After the customer has established a one year prompt payment record, such a deposit will be refunded or credited to the customer account at any time prior to the termination of the provision of the FIA to the customer.

In case of a cash deposit, for the period the deposit is held by the Telephone Company, the customer will receive simple annual interest at the percentage rate specified in the Telephone Company General and/or Local Tariff.

(B) Where the provision of FIA requires construction of facilities in order to satisfy a customer's request for service, Special Construction charges as described in Section 3.1.3 following may apply.

© 2022 Frontier Communications Parent, Inc. All rights reserved

2. GENERAL REGULATIONS (Cont'd)

2.4 Payment Arrangements (Cont'd)

2.4.1 Payment of Charges and Deposits (Cont'd)

(C) The Telephone Company shall bill FIA services on a current basis for (a) all charges incurred, (b) applicable taxes, and (c) credits due the customer.

- Switched Access (except for the Entrance Facility, Direct-Trunked Transport and Multiplexing elements), Ancillary and Miscellaneous services shall be billed in arrears.

- Special Access, monthly EIS elements, Switched Access Entrance Facility, Direct-Trunked Transport and Multiplexing elements shall be billed in advance except for the charges and credits associated with the initial or final bills. The initial bill will also include charges for the actual period of service up to, but not including, the bill date. The unused portion of the FIA already billed will be credited on the final bill.

The customer will receive its bill in; 1) a paper format, 2) a paper format bill summary with a magnetic tape to provide the detailed information of the bill, 3) magnetic tape only, or 4) via electronic transmission. Such bills are due when rendered regardless of the media utilized. Adjustments for the quantities of FIA established or discontinued in any billing period beyond the minimum period in 2.4.2 will be prorated to the number of days based on a 30 day month. The Telephone Company will, upon request and if available, furnish such detailed information as may reasonably be required for verification of any bill.

All bills to the customer are due 31 days (payment date) after the bill date or by the next bill date (i.e., same date in the following month as the bill date), whichever is the shortest interval. In the event the customer does not remit payment in immediately available funds by the payment date, the FIA may be discontinued as specified in 2.1.8.

(1) If the entire amount billed is not received by the Telephone Company in immediately available funds by the payment date, an additional charge (late payment charge) equal to 1/365th of the percentage rate for deposit interest as that in 2.4.1(A) of the unpaid balance will be applied for each day or portion thereof that an outstanding balance remains.

If such payment date would cause payment to be due on a Saturday, Sunday or Holiday (i.e., New Year's Day, Independence Day, Labor Day, Thanksgiving Day, Christmas Day, the second Tuesday in November and a day when Washington's Birthday, Memorial Day or Columbus Day is legally observed), payment for such bills will be due from the customer as follows:

- If such payment date falls on a Saturday or on a Holiday which is observed on Tuesday, Wednesday, Thursday or Friday, the payment date shall be the last non-Holiday day preceding such Saturday or Holiday.

- If such payment date falls on a Sunday or on a Holiday which is observed on a Monday, the payment date shall be the first non-Holiday day following such Sunday or Holiday.

© 2022 Frontier Communications Parent, Inc. All rights reserved

2. GENERAL REGULATIONS (Cont'd)

2.4 Payment Arrangements (Cont'd)

2.4.1 Payment of Charges and Deposits (Cont'd)

(Cont'd)

(2) In the event of a billing dispute, the customer must submit a documented claim for the disputed amount. A good faith dispute requires the customer to provide a written claim to the Telephone Company. Instructions for submitting a dispute can be obtained by calling the billing inquiry number shown on the customer's bill, or, by accessing the Telephone Company website also shown on the customer's bill. Such claim must identify in detail the basis for the dispute, and if the customer withholds disputed amounts, it must identify the account number under which the bill has been rendered, the date of the bill and the specific items on the bill being disputed, to permit the Telephone Company to investigate the merits of the dispute.

© 2022 Frontier Communications Parent, Inc. All rights reserved

2. GENERAL REGULATIONS (Cont'd)

2.4 Payment Arrangements (Cont'd)

2.4.1 Payment of Charges and Deposits (Cont'd)

(Cont'd)

(2) If the customer pays the bill in full by the payment due date, and later initiates a billing dispute within ninety days of the payment due date, penalty interest may be applicable.

- If the billing dispute is resolved in favor of the customer, the customer shall receive a credit from the Telephone Company equal to the disputed amount resolved in the customer's favor times the percentage rate in (1) above. This percentage credit amount will apply from the date of the customer's payment through the date on which the credit is posted to the customer's account.

If the dispute is resolved in favor of the Telephone Company, neither a late payment charge nor a penalty interest charge is applicable.

(3) If the customer pays the bill in full by the payment due date, and later initiates a billing dispute, penalty interest may be applicable. (C) (C)

- If the billing dispute is resolved in favor of the customer, the customer shall receive a credit from the Telephone Company equal to the disputed amount resolved in the customer's favor times the percentage rate in (1) above. This percentage credit amount will apply from the date of dispute through the date on which the credit is posted to the customer's account.

If the dispute is resolved in favor of the Telephone Company, neither a late payment charge nor a penalty interest charge is applicable.

(4) Late Payment Charges applicable to End User FIA, described in Section 13, are those in the Telephone Company General and/or Local Tariffs.

© 2022 Frontier Communications Parent, Inc. All rights reserved

2. GENERAL REGULATIONS (Cont'd)

2.4 Payment Arrangements (Cont'd)

2.4.2 Minimum Periods

(A) The minimum periods for which FIA are provided and which rates and charges are applicable are in 3.2.4.

(B) The minimum periods for which FIA are provided and which rates and charges are applicable for Specialized FIA or Arrangements provided on an Individual Case Basis, as in Section 7 are established with the individual case filing.

(C) For discontinuances of FIA with a one month minimum period, all applicable charges for the one month period will apply. In instances where the minimum period is greater than one month, however, the charge will be the lesser of the Telephone Company's non-recoverable costs less the net salvage value for the discontinued service of the minimum period charges.

The minimum periods for which Expanded Interconnection Services are provided and which rates and charges are applicable are in Section 17.

(E) The minimum periods for Ethernet Private Line Services are provided and which rates and charges are applicable are in Section 20.

© 2022 Frontier Communications Parent, Inc. All rights reserved

2. GENERAL REGULATIONS (Cont'd)

2.5 Connections

2.5.1 General

Equipment and systems (i.e., terminal equipment, multiline terminating systems, and communications systems) may be connected with Switched and Special Access furnished by the Telephone Company where such connection or interconnection is made in accordance with the provisions specified in the NECA Technical Reference Publication AS No. 1 and in 2.1 preceding.

2.5.2 Standard Access Service Connections

Access services are provided by means of wire, fiber optics, radio or any other suitable technology or a combination thereof. Special Access service connections are made directly or through a Telephone Company hub where bridging or multiplexing functions are performed. These connections can either be analog or digital.

© 2022 Frontier Communications Parent, Inc. All rights reserved

2. GENERAL REGULATIONS (Cont'd)

2.6 Definitions

Certain terms used herein are defined as follows:

Access Area

The term "Access Area" denotes a specific calling area containing those customers served by one or more Central Offices associated with the various Switched Access provisions offered under this Guide. The size and configuration of the Access Area a customer obtains is dependent upon the Feature Group type and the specific characteristics of the Central Office or Access Tandem office to which the connection is made.

Access Code

The term "Access Code" applies to Switched Access Service. It denotes a uniform seven digit code dialed by an end user to access an Interexchange Carrier's facilities. The Carrier Access Code (CAC) has the form 101XXXX and the Carrier Identification Code (CIC) has the form 950-XXXX.

Access Group

The term "Access Group" denotes a grouping of lines or trunks used to establish a connection between switching systems. Each grouping of lines or trunks is traffic engineered as a unit with each of the individual members of the group having identical characteristics and being interchangeable with any other member of the group.

Access Minutes

The term "Access Minutes" denotes that usage of exchange facilities in interstate or foreign service for the purpose of calculating chargeable usage. On the originating end of an interstate or foreign call, usage is measured from the time the originating End User's call is delivered by the Telephone Company to and acknowledged as received by the customer's facilities connected with the originating exchange. On the terminating end of an interstate or foreign call, usage is measured from the time the call is received by the End User in the terminating exchange. Timing of usage at both originating and terminating ends of an interstate or foreign call shall terminate when the calling or called party disconnects, whichever event is recognized first in the originating and terminating end exchanges, as applicable. For the calculation of total minutes, seconds are totaled and converted to minutes before rounding occurs. Remainder seconds greater than 29 are rounded to a minute.

Access Service Request

The term "Access Service Request" (ASR) denotes a document (i.e., order) used by the Telephone Company to process a customer's request for Access Services as offered throughout this Guide.

Access Tandem

The term "Access Tandem" denotes a telephone company switching system that provides a traffic concentration and distribution function for inter-LATA traffic originating from or terminating at end offices in the access area.

Add/Drop Multiplexing

The term "Add/Drop Multiplexing" denotes a multiplexing function that allows lower level signals to be added or dropped with the remaining traffic continuing through the network.

© 2022 Frontier Communications Parent, Inc. All rights reserved

2. GENERAL REGULATIONS (Cont'd)

2.6 Definitions (Cont'd)

Agent

The term "Agent" as used in Section 6 of this Guide, is defined as that person or entity that the Telephone Company acknowledges as controlling decisions pertaining to Pay telephone Service or, that person or entity duly authorized to act in that capacity by the physical owner of the premises.

Aggregator

The term "Aggregator" denotes any individual, partnership, association, joint-stock company, trust or corporation that, in the ordinary course of its operations, makes telephones available to the public or to transient users of its premises, for interstate telephone calls using a provider of operator services.

Alternate Billing Service

The term "Alternate Billing Service (ABS)" denotes the ability of the end user to bill calls to an account not necessarily associated will the originating line, including calling card, collect and third number billing.

Answer/Disconnect Supervision

The term "Answer/Disconnect Supervision" denotes the transmission of the switch trunk equipment supervisory signal (off-hook or on-hook) to the CDL for terminating calls to the Telephone Company end office as an indication that the called party has answered or disconnected.

Answer Message

The term "Answer Message" denotes an SS7 message sent in the backward direction to indicate that the call has been answered.

Attempt

The term "Attempt" denotes a call in the originating direction from an end user to the CDL which is completed (answered) or not completed (not answered) and a call in the terminating direction from the CDL to a customer which is completed (Answered) or not completed (not answered).

Attenuation Distortion

The term "Attenuation Distortion" denotes the difference in loss at specified Frequencies relative to the loss at 1004 Hz.

© 2022 Frontier Communications Parent, Inc. All rights reserved

2. GENERAL REGULATIONS (Cont'd)

2.6 Definitions (Cont'd)

Balance (100-Type) Test Line

The term "Balance (100-Type) Test Line" denotes a standard feature of FGA, FGB, FGC, FGD, 800, 888 Access Service, BSA-A, BSA-B, BSA-C, and BSA-D and refers to the end office termination provided for balance and noise testing. The termination provides off-hook supervision to the calling end, and terminates the line or trunk in a resistive and capacitive arrangement which simulates the characteristic impedance of the end office.

Basic Service Element

The term "Basic Service Element (BSE)" denotes an unbundled service option available only with Basic Serving Arrangements.

Basic Serving Arrangement

The term "Basic Serving Arrangement (BSA)" denotes a category of Switched Access Service differentiated by technical characteristics, e.g., line side versus trunk side connection at the Telephone Company's first point of switching.

BHMC

See Busy Hour Minutes of Capacity.

Billed Number Screening

The term "Billed Number Screening (BNS)" denotes the process of utilizing a line information data base to determine billing number acceptance for collect and third number calls and to perform public telephone line number checks to prevent the alternate billing of calls to public coin telephone lines.

Bit

The term "Bit" denotes the smallest unit of information in the binary system of notation.

Bridging

The term "Bridging" denotes the connection of one or more circuits in parallel with another circuit without interrupting the continuity of the first circuit.

Bridging Wire Center

The term "Bridging Wire Center" denotes the telephone company designated wire center in which bridging is accomplished.

Business Day

The term "Business Day" denotes the times of day that a company is open for business. Generally, in the business community, these are 8:00 or 9:00 a.m. to 5:00 or 6:00 p.m., respectively, with an hour for lunch, Monday through Friday, resulting in a standard forty (40) hour work week.

Busy Hour Minutes of Capacity

The term "Busy Hour Minutes of Capacity" (BHMC) denotes the trunk group usage load consisting of the average usage load for the busy season.

Busy Season

The term "Busy Season" denotes the four consecutive weeks of the calendar year having the highest daily busiest hour traffic load based on a five day week. Normally the five-day week consists of Monday through Friday. Where weekend traffic is greater than weekday traffic, one or both weekend days may be used as a substitute for a weekday as long as a consistent five-day week is maintained for the four consecutive weeks.

© 2022 Frontier Communications Parent, Inc. All rights reserved

2. GENERAL REGULATIONS (Cont'd)

2.6 Definitions (Cont'd)

Bit

The term "Bit" denotes a binary digit, the smallest unit of information in the binary system of notation.

Byte

The term "Byte" denotes a sequence or group of eight bits that represents one character.

Carrier Identification Code

The term "Carrier Identification Code" (CIC) denotes the uniform access code associated with a specific Interexchange Carrier.

Carrier Identification Parameter

The term "Carrier Identification Parameter" (CIP) denotes a field in the SS7 Initial Address Message (IAM) that identifies and transmits CIC information in a forward direction to an IC customer.

C-Conditioning

The term "C-Conditioning" denotes a telephone company special treatment of the transmission path in order to control attenuation and envelope delay distortion.

C-Message Noise

The term "C-Message Noise" denotes the frequency weighted average noise within an idle voice circuit. The frequency weighting, called C-message, is used to simulate the frequency characteristic of the 500-type telephone set and the hearing of the average subscriber.

C-Notched Noise

The term "C-Notched Noise" denotes the frequency weighted noise on a voice circuit with a holding tone, which is removed at the measuring end through a notch (very narrow band) filter.

© 2022 Frontier Communications Parent, Inc. All rights reserved

2. GENERAL REGULATIONS (Cont'd)

2.6 Definitions (Cont'd)

CCS

The term "CCS" denotes a hundred call-seconds which is a standard unit of traffic load that is equal to 100 seconds of usage or capacity of a group of lines or trunks.

Call

The term "Call" denotes a communication including an off-hook signal and routing information initiated at the originating location and completed to a terminating location.

Call Branding

Call Branding is the act of providing customer identification, audibly and distinctly, to the caller at the beginning of a Preferred Directory Assistance call.

Cellular Mobile Carrier (CMC)

The term "Cellular Mobile Carrier (CMC)" denotes a Common Carrier authorized by the Federal Communications Commission to provide cellular mobile radio telecommunications services.

Central Office

The term "Central Office" denotes a telephone company local switching system where telephone company local service subscriber station loops are terminated for purposes of interconnection to each other and to trunks.

Central Office Loop Around Test Line

The term "Central Office Loop Around Test Line" denotes equipment in the Telephone Company's end office which provides a means for making two-way transmission tests for Switched Access services. These transmission tests are normally for the measurement of level and noise tests. This arrangement has two terminations, each reached by means of a separate seven digit number.

Central Office Prefix

The term "Central Office Prefix" denotes the first three digits (NXX) of the telephone number assigned to a telephone company subscriber's local service.

Centralized Automatic Reporting on Trunks (CAROT) Testing

The term "Centralized Automatic Reporting on Trunks (CAROT) Testing" denotes a type of testing which includes the capacity for measuring the 1000 Hz loss, C-message weighted noise, C-notched noise, loss slope, and the provision of a balance termination.

Channelize

The term "Channelize" denotes the process of multiplexing demultiplexing circuits using analog or digital techniques.

Circuit

The term "Circuit" denotes an electrical or photonic, in the case of fiber optic based transmission systems, communications path between two or more points of termination.

© 2022 Frontier Communications Parent, Inc. All rights reserved

2. GENERAL REGULATIONS (Cont'd)

2.6 Definitions (Cont'd)

Circuit Code

The term "Circuit Code" denotes the service class routing of an SS7 call that indicates the interexchange carrier trunk group to which the traffic will be routed (e.g., 0+, 0-, 500, 900, etc.).

Common Channel Signaling System 7 Network (CCS7)

The term "Common Channel Signaling System 7 Network (CCS7)" denotes a dedicated out-of-band signaling network which utilizes Signaling System 7 (SS7) protocol to provide call handling and data base access services.

© 2022 Frontier Communications Parent, Inc. All rights reserved

2. GENERAL REGULATIONS (Cont'd)

2.6 Definitions (Cont'd)

Common Line

The term "Common Line" denotes a line, trunk, coin line or other facility provided under the Telephone Company General and/or Local Tariffs, terminated on a Central Office switch. A Common Line - Residence is a line or trunk provided under the residence regulations of the Telephone Company General and/or Local Tariffs. A Common Line - Business is a line or trunk provided under the business regulations of the Telephone Company General and/or Local Tariffs. A coin line is a line provided under the public and/or semi-public service regulations of the Telephone Company General and/or Local Tariffs.

Communications System

The term "Communications System" denotes circuits and other facilities which are capable of communications between terminal equipment provided by other than the Telephone Company or Telephone Company stations.

Competitive County

The term "Competitive County" denotes the geographic unit of a county or county-equivalent that passes or has passed a competitive market test specified by the FCC. Competitive County also denotes a county or county-equivalent that failed a competitive market test specified by the FCC, but was granted Phase II, Level 2 pricing flexibility prior to June 1, 2017.

Concatenated

The term "Concatenated" denotes the linking together of various data structures, e.g., two bandwidths joined to form a single bandwidth.

Confirmed ASR

The term "Confirmed ASR" denotes a customer's ASR for a) Switched Access FIA which the Telephone Company has processed with the Engineering Department to confirm for the customer and the Telephone Company the availability of facilities and/or equipment, and b) Special Access FIA for which the Telephone Company confirms to the customer that the established due date can be met. The date the ASR is confirmed, the standard service date interval commences.

Confirming Design Layout Report Date

The term "Confirming Design Layout Report (CDLR) Date" identifies the date that the Telephone Company is scheduled to receive confirmation that the Design Layout Report provided by the Telephone Company for a confirmed ASR is acceptable.

Connecting Facility Assignment

The term "Connecting Facility Assignment" denotes the identification of a channel or circuit to be used from a high capacity facility.

Conventional Signaling

The term "Conventional Signaling" denotes the inter-machine signaling system which has been traditionally used in North America for the purpose of transmitting the called number's address digits from the originating end office to the switching machine which will terminate the call. In this system, all of the dialed digits are received by the originating switching machine, a path is selected, and the sequence of supervisory signals and outpulsed digits is initiated. No overlap outpulsing, ten-digit ANI, ANI information digits, or acknowledgement wink are included in this signaling sequence.

© 2022 Frontier Communications Parent, Inc. All rights reserved

2. GENERAL REGULATIONS (Cont'd)

2.6 Definitions (Cont'd)

Customer

The term "Customer" denotes any individual, partnership, association, joint-stock company, trust, corporation, or governmental entity or any other entity which subscribes to the services offered under this Guide.

Customer Designated Location

The term "Customer Designated Location" (CDL) denotes a location specified by the customer for the purpose of terminating FIA services. The Telephone Company must have access to the location to perform installation, testing, and maintenance functions. The customer may or may not have access to the location. CDLs include locations such as customer premises, end user premises, customer repeater stations, customer microwave towers, a Telephone Company's first point of switching, some other point where Telephone Company testing can occur, etc. A CDL may be designated by the customer for Switched Access, Special Access, or both in combination. Customer transmission facilities and equipment may be terminated in Telephone Company wire centers or access tandems under EIS arrangements, as defined in Section 17. Telephone Company Switched and Special Access Services may be interconnected to such customer equipment using Cross Connect arrangements as described in Section 4.5.3 and Section 5.1.1, respectively.

D-Conditioning

The term "D-Conditioning" denotes a Telephone Company special treatment of the transmission path in order to control C-notched noise and intermodulation distortion.

Daily Busiest Hour

The term "Daily Busiest Hour" denotes the highest usage hour for each day with the reading taken on the clock hour or half hour. The clock hour or half hour selection varies from day to day, depending upon the usage measured. The Daily Busiest Hour is also known as the Bouncing Busy Hour.

Data Transmission (107-Type) Test Line

The term "Data Transmission (107-Type) Test Line" denotes an arrangement which provides for the connection to a signal source which provides test signals for one-way testing of data and voice transmission parameters.

Disconnect Non-Recurring Charge (N)

In addition to any other charges associated with discontinuance of services, the Telephone Company will charge a disconnect non-recurring charge to discontinue services. This charge applies on a per circuit basis. (N)

Drop Cable

A facility provided by the Telephone Company which connects the broadband feeder cable to the premises of the customer's subscribers for the purposes of Video Channel Services.

Dual Tone Multifrequency Address Signaling

The term "Dual Tone Multifrequency (DTMF) Address Signaling" denotes a type of signaling that is an optional feature of FGA and BSA-A. It may be utilized when FGA or BSA-A is being used in the terminating direction. An office arranged for signaling would expect to receive address signals from the IC in the form of DTMF format.

Echo Path Loss

The term "Echo Path Loss" denotes the measure of reflected signal at a four-wire interface without regard to the send and receive Transmission Level Point (TLP).

Echo Return Loss

The term "Echo Return Loss" denotes a frequency weighted measure of return loss over the middle of the voiceband (approximately 500 to 2500 Hz) where talker echo is most annoying.

Certain material on this page formerly appeared on 2-22

© 2024 Frontier Communications Parent, Inc. All rights reserved

2. GENERAL REGULATIONS (Cont'd)

2.6 Definitions (Cont'd)

End Office Switch

The term "End Office Switch" denotes a Telephone Company local switching system located in a wire center where Telephone Company local service subscriber station loops are terminated for purposes of originating and terminating traffic to or from a customer.

End User

The term "End User" means any customer of an interstate or foreign telecommunications service that is not a carrier, except that a carrier, other than the Telephone Company, shall be deemed to be an "end user" to the extent that such carrier uses a telecommunications service for administrative purposes, and a person or entity that offers telecommunications services exclusively as a reseller shall be deemed to be an "end user" if all resale transmissions offered by such reseller originate on the premises of such reseller (e.g., hotels, motels and shared tenant services).

Engineering Review

The term "Engineering Review" denotes the examination of an ASR with a customer requested change to determine if a design change is required. It includes, but is not limited to, the review for possible change requirements in equipment, interfaces, circuit configurations, engineering records, and billing.

Entry Switch

See First Point of Switching.

Excess Capacity

The term "Excess Capacity" denotes a quantity of FIA requested by the customer which is greater than that which the Telephone Company would construct to fulfill the customer's ASR.

Exchange

The term "Exchange" denotes a unit generally smaller than a Local Access and Transport Area (LATA), established by the Telephone Company for the administration of communications service in a specified area which usually embraces a city, town or village and its environs. It consists of one or more central offices together with the associated facilities used in furnishing communications service within that area. One or more designated exchanges comprise a given LATA.

Exchange Access Signaling

The term "Exchange Access Signaling" denotes the signaling system used by equal access end offices to transmit originating information and address digits to the customer's premises and includes the means of verifying the receipt of these address digits. Features of this system include overlap outpulsing (in suitably equipped end offices), identification of the type of call, identification of the ten-digit telephone number of the calling party, and acknowledgement wink supervisory signals.

© 2024 Frontier Communications Parent, Inc. All rights reserved

. GENERAL REGULATIONS (Cont'd)

2.6 Definitions (Cont'd)

Existing Suitable Space

The term "Existing Suitable Space" denotes a space in which ac/dc power, heat and air conditioning, battery and generator back-up power, and other requirements necessary for provision of wire center or access tandem equipment currently exists.

Exit Message

The term "Exit Message" denotes an SS7 message sent to an end office by the Telephone Company tandem switch to mark the connect time when the Telephone Company's tandem switch sends an Initial Address Message to a customer.

Extended Area Service

The term "Extended Area Service" (EAS) denotes an arrangement whereby a customer in one exchange can call a local number in another exchange that is part of the extended area without paying a toll charge.

Extensible Markup Language (XML)

The term "Extensible Markup Language" (XML) denotes a simple, very flexible text format that is used in the exchange of a wide variety of data on the Web and elsewhere.

Facility

The term facility denotes generically the various transmission media used for the transmission of telecommunication services. This includes, but is not limited to, cable (copper pair, coaxial, and fiber optic) and microwave radio equipment.

Firm Order Confirmation Date

The term "Firm Order Confirmation (FOC) Date" denotes the date that the Telephone Company will provide the schedule of dates for the provisioning activities associated with the customer's request for service.

First Point of Switching

The term "First Point of Switching" denotes either the first telephone company location at which switching occurs on the terminating path of a call proceeding from the CDL to the terminating end office or the last telephone company location at which switching occurs on the originating path of a call proceeding from the originating end office to the CDL.

Flexible Automatic Number Identification (FLEX ANI)

The term "Flexible Automatic Number Identification" denotes an optional feature or Basic Service Element that provides additional values for the information indicator digits available with the ANI feature on originating calls. These additional digits identify the type of line that is originating the call for billing, screening and routing purposes.

© 2024 Frontier Communications Parent, Inc. All rights reserved

2. GENERAL REGULATIONS (Cont'd)

2.6 Definitions (Cont'd)

Four-Wire to Two-Wire Conversion

The term "Four-Wire to Two-Wire Conversion" denotes an arrangement which converts a four-wire transmission path to a two-wire transmission path to allow a four-wire facility to terminate in a two-wire entity such as a central office switch trunk circuit or switching system.

Frame

The term "Frame" denotes a group of data bits, in a specific format, with a flag at either end to indicate the beginning and end of the frame. The defined format enables network equipment to recognize the meaning and purpose of specific bits.

© 2024 Frontier Communications Parent, Inc. All rights reserved

2. GENERAL REGULATIONS (Cont'd)

2.6 Definitions (Cont'd)

Gateway Switch

The switch through which communication passes between public packet switched networks.

Geographically Aggregated Rate (GAR)

The term "Geographically Aggregated Rate" denotes a situation in which the rates and charges for a service offering, for which there is currently no demand, are developed based upon the aggregated revenue requirement and demand for more than one study area. Upon receipt of a request for service, the current geographically averaged rates will be redeveloped to include the new study area.

Example: Study areas A, B and C have been geographically aggregated. Geographically averaged rates for A and B were developed based upon their aggregated revenue requirement and demand, while Area C, marked "GAR", has no current demand. Should C receive a request for service, the current geographically averaged rates will be redeveloped to include C's revenue and demand. The redeveloped rates and charges will now be applicable to customers on A, B and C.

Ground Start Supervisory Signaling

The term "Ground Start Supervisory Signaling" denotes a type of signaling which provides for the application of ground on the tip side at the point of termination (assuming no signaling conversion has been provided by the Telephone Company) as an initial seizure signal before the application of ringing in the originating direction (towards the customer from the end office).

Head-End

The Telephone Company location where analog video and audio signals are received from the customer for transmission over the broadband distribution facilities to subscribers for the purposes of providing Video Channel Services.

IC CDL

The Term "IC CDL" denotes a Customer Designated Location (CDL) where FIA is terminated and connected to an Interexchange Carrier.

Immediately Available Funds

The term "Immediately Available Funds" denotes a corporate or personal check drawn on a bank account and funds which are available for use by the receiving party on the same day on which they are received and includes U.S. Federal Reserve bank wire transfers, U.S. Federal Reserve notes (paper cash), U.S. coins, U.S. Postal Money Orders, and New York Certificates of Deposit.

Individual Case Basis

The term "Individual Case Basis" (ICB) denotes a condition where the regulations, if applicable, rates and charges for an offering under the provisions of this Guide are developed based on the circumstances in each case.

Information Service Provider

The term "Information Service Provider" denotes one who offers a capability for generating, acquiring, storing, transforming, processing, retrieving, utilizing, or making available information which may be conveyed via telecommunications, except that such service does not include (1) any use of any such capability for the management, control, or operation of a telecommunications system or the management of a telecommunications service, or (2) the provision of time, weather, and such other similar audio services that are offered by the Telephone Company.

© 2024 Frontier Communications Parent, Inc. All rights reserved

2. GENERAL REGULATIONS (Cont'd)

2.6 Definitions (Cont'd)

Initial Address Message (IAM)

The term "Initial Address Message (IAM)" denotes an SS7 message sent in the forward direction to initiate trunk set up with the busying of an outgoing trunk which carries the information about that trunk along with other information relating to the routing and handling of the call to the next switch.

Installed Cost

The term "Installed Cost" denotes the total cost (estimated or actual) by the Telephone Company to provide facilities for the offered services.

Interconnection

The term "Interconnection" denotes the termination of a customer's basic transmission facilities, including optical terminating equipment and multiplexers at or near Telephone Company wire center or access tandem. Interconnection is provided as physical or virtual.

Interconnection Point

The term "Interconnection Point" denotes physical EIS arrangements as the point where the customer-owned cable facilities connect to the Telephone Company termination equipment. The interconnection point for virtual EIS arrangements is the demarcation between ownership of the cable facilities.

Interexchange Carrier (IC) or Interexchange Common Carrier

The terms "Interexchange Carrier" (IC) or "Interexchange Common Carrier" denote any individual, partnership, association, joint stock company, trust, governmental entity or corporation engaged for hire in interstate or foreign communication by wire or radio, between two or more LATAs.

Intermodulation Distortion

The term "Intermodulation Distortion" denotes a measure of the nonlinearity of a circuit. It is measured using four tones, and evaluating the ratios (in dBs) of the transmitted composite four-tone signal power to the second-order products of the tones (R2), and the third-order products of the tones (R3).

Interstate Communications

The term "Interstate Communications" denotes both interstate and foreign communications.

© 2024 Frontier Communications Parent, Inc. All rights reserved

2. GENERAL REGULATIONS (Cont'd)

2.6 Definitions (Cont'd)

Intrastate Communications

The term "Intrastate Communications" denotes any communications within a state subject to oversight by a state regulatory commission as provided by the laws of the state involved.

Kilosegment

The term "Kilosegment" denotes a unit of packet transmission defined as 64,000 bytes of data; one thousand segments.

Local Area Network (LAN)

A network permitting the interconnection and intercommunication of a group of computers, primarily for the sharing of resources such as data storage devices and printers.

Line

The term "Line" denotes a communications path connecting an end office switch with an end user's premises or a CDL for the provision for FGA or BSA-A.

Line Group

The term "Line Group" denotes a grouping of lines which are traffic engineered as a unit for the establishment of connections between end office switches and customers in which all of the communications paths are interchangeable.

Line Information Data Base

The term "Line Information Data Base (LIDB)" denotes a data base containing billing validation data providing the ability to screen billed numbers to support Alternate Billing services.

Line Side Connection

The term "Line Side Connection" denotes a connection of a transmission path to the line side of an end office system.

Local Access and Transport Area

The term "Local Access and Transport Area" (LATA) denotes a geographic area for the provision and administration of communications service. It encompasses designated Access Areas which are grouped to serve common social, economic, and other purposes.

Logical Channel

The term "Logical Channel" denotes a communication channel which allows two-way simultaneous transmission of data packets through the network. No circuit capability is preassigned to a logical channel. Capacity is made available as the data is transmitted. Each virtual connection utilizes one logical channel.

© 2024 Frontier Communications Parent, Inc. All rights reserved

2. GENERAL REGULATIONS (Cont'd)

2.6 Definitions (Cont'd)

Maximum Termination Liability

The term "Maximum Termination Liability" (MTL) denotes the maximum amount of money for which the customer is liable in the event all FIA ordered in an Individual Case Basis (ICB) arrangement are discontinued before a specified period of time.

Metropolitan Statistical Area (MSA)

The term "Metropolitan Statistical Area (MSA)" denotes a prescribed geographic area comprised of Telephone Company Wire Centers which has been grouped together.

Mid Link

The term "Mid Link" denotes the Special Transport facilities between Hub Wire Centers where the circuit is bridged and/or where switching devices such as a loop transfer arrangement are located.

Milliwatt (102 Type) Test Line

The term "Milliwatt (102-Type) Test Line" denotes an arrangement in an end office which provides a 1004 Hz tone at 0 dBm0 for one-way transmission measurements towards the CDL from the Telephone Company end office.

Mobile Telephone Switching Office (MTSO)

The term "Mobile Telephone Switching Office (MTSO)" denotes a Cellular Mobile Carrier (CMC) switching facility that is used to originate or terminate calls on the CMC network, or originate or terminate calls between the CMC and the public switched telephone network.

© 2024 Frontier Communications Parent, Inc. All rights reserved

2. GENERAL REGULATIONS (Cont'd)

2.6 Definitions (Cont'd)

Multicarrier Access Area

The term "Multicarrier Access Area" denotes an EAS for FGA and BSA-A or an area for FGB and BSA-B where FIA Services are provided by more than one telephone company in which a customer obtains access to an entire EAS or FGB or BSA-B area by obtaining a FGA or BSA-A, or FGB or BSA-B access tandem arrangement that connects its switch with the First Point of Switching of the Primary Exchange Carrier.

National Security Emergency Preparedness (NSEP) Services

The term "National Security Emergency Preparedness (NSEP) Services" denotes telecommunications services which are used to maintain a state of readiness or to respond to and manage any event or crisis (local, national or international), which causes or could cause injury or harm to the population, damage to or loss of property, or degrades or threatens the NSEP posture of the United States.

Native Ethernet

The term "Native Ethernet" denotes an Ethernet transmission that is not carried within a SONET signal.

Net Salvage

The term "Net Salvage" denotes the estimated scrap, sale, or trade-in value, less the estimated cost of removal. Cost of removal includes the costs of demolishing, tearing down, removing, or otherwise disposing of the material and any other applicable costs. Because the cost of removal may exceed salvage, facilities may have negative net salvage.

Network Address

The term "Network Address" denotes the alphanumeric character string used to specify the destination of each switched connection made within the network.

© 2024 Frontier Communications Parent, Inc. All rights reserved

2. GENERAL REGULATIONS (Cont'd)

2.6 Definitions (Cont'd)

Network Channel Interface Code

The "Network Channel Interface" code (NCI) is an ordering code that provides an indication of the generic channel type. The NCI code provides the technical characteristics of the interface and describes the physical and electrical characteristics of the special access interface to the customer designated locations. A complete description and listing of these interface codes is specified in Section 6103 of the GTE Technical Interface Reference Manual.

Node

The term "Node" denotes a SONET ring service element that designates either a customer designated location or a Telephone Company wire center location on the SONET ring. It also denotes the location/address of where a channelized service originates or terminates on a ring.

Non-Competitive County

The term "Non-Competitive County" denotes the geographic unit of a county or county-equivalent that failed a competitive market test specified by the FCC (excluding those that were granted Phase II, Level 2 pricing flexibility prior to June 1, 2017 and thus are defined as "Competitive Counties").

Non-Overlap Outpulsing

The term "Non-Overlap Outpulsing" is the feature of the exchange access signaling system which provides initiation of pulsing to the customer's premises after the calling subscriber has completed dialing an originating call.

Nonrecoverable Cost

The term "Nonrecoverable Cost" denotes the cost of specially constructed facilities for which the Telephone Company has no foreseeable use should the customer terminate service.

Nonsynchronous Test Line

The term "Nonsynchronous Test Line" denotes an arrangement in step-by-step end offices which provides operational tests which are not as complete as those provided by the synchronous test lines, but which can be made more rapidly.

North American Numbering Plan

The term "North American Numbering Plan" denotes a three-digit area or Numbering Plan Area (NPA) code and a seven-digit telephone number made up of a three-digit Central Office code (NXX) plus a four-digit station number (XXXX).

NSEP Treatment

The term "NSEP Treatment" denotes the provisioning of a telecommunications service before others based on the provisioning priority level assigned by the Executive Office of the President.

Octet

The term "Octet" denotes a group of eight binary digits operated upon as an entity.

Off-Hook

The term "Off-Hook" denotes the active condition of Switched Access or a Telephone Company local service line.

On-Hook

The term "On-Hook" denotes the idle condition of Switched Access or a Telephone Company local service line.

© 2024 Frontier Communications Parent, Inc. All rights reserved

2. GENERAL REGULATIONS (Cont'd)

2.6 Definitions (Cont'd)

Open Circuit Test Line

The term "Open Circuit Test Line" denotes an arrangement in an end office which provides an ac open circuit termination of the trunk or line by means of an inductor of several Henries.

Optical Carrier Rate (OC-N)

The term "OC-N" denotes an Ethernet Private Line transmission signal, speed, line rate, or service and may be commonly referred to as follows:

OC-N Rate	Bandwidth Capacity
OC-1	51.84 Mbps
OC-3	155.52 Mbps
OC-12	622.08 Mbps
OC-24	1.25 Gbps
OC-48	2.488 Gbps

Order Interval

The term "Order Interval" denotes the interval between the Scheduled Issue Date and the Service Date.

Originating Direction

The term "Originating Direction" denotes the use of Switched Access for the origination of calls from an end user to a CDL.

Originating Point Code

The term "Originating Point Code (OPC)" denotes the identity assigned to each Operator Service System (OSS) location.

Overlap Outpulsing

The term "Overlap Outpulsing" is the feature of the exchange access signaling system which permits initiation of pulsing to the customer's premises before the calling subscriber has completed dialing an originating call.

OZZ Code

The term "OZZ Code" denotes the service class routing code of a multifrequency (MF) call that indicates the interexchange carrier trunk group to which the traffic will be routed (e.g., 0+, 0-, 500, 900, etc.).

Packet

The term "Packet" denotes a continuous sequence of binary digits of information which is switched through the network as an integral unit. The user data is divided into segments for billing purposes. The number of segments contained in a packet is dependent upon the packet size.

Packet Switch

The term "Packet Switch" denotes a central office based switch that establishes a virtual connection between two data network addresses for the transmission of discrete amounts of information.

Certain material on this page formerly appeared on 2-32

© 2024 Frontier Communications Parent, Inc. All rights reserved

2. GENERAL REGULATIONS (Cont'd)

2.6 Definitions (Cont'd)

Packet Switching Office

The term "Packet Switching Office" denotes the central office where the packet switching functions are performed and access to the packet network is accomplished.

Payload

The term "Payload" denotes the portion of the SONET signal available to carry service signals such as DS0, DS1, and DS3.

Physical EIS

The term "Physical EIS" denotes an offering that enables customers to place equipment needed to terminate basic transmission facilities, including optical terminating equipment and multiplexers, within or upon the Telephone Company's wire center or Telephone Company access tandem buildings, use such equipment to connect customer's fiber optic systems or microwave radio transmission facilities (where reasonably feasible) with the local exchange carrier's equipment and facilities used to provide interstate switched and special access services.

Plant Test Date

The term "Plant Test Date" denotes the date on which installation is completed and the Telephone Company to customer testing can begin.

Point of Termination

The term "Point of Termination" denotes the point of demarcation at a CDL or end user premises at which the Telephone Company's responsibility for the provision of FIA Service ends.

Premises

The term "Premises" denotes a building or buildings on continuous property (except Railroad Right-of-Way, etc.) not separated by a public highway.

Pre-service Testing

The term "Pre-service Testing" denotes tests performed on a FIA to assure standard transmission performance/parameters meet specifications prior to acceptance testing.

Primary Exchange Carrier

The term "Primary Exchange Carrier" (PEC) denotes the telephone company in whose exchange a customer's first point of switching (i.e., dial tone for FGA or BSA-A, an access tandem for FGB or BSA-B) is located.

Certain material on this page formerly appeared on 2-33

© 2024 Frontier Communications Parent, Inc. All rights reserved

2. GENERAL REGULATIONS (Cont'd)

2.6 Definitions (Cont'd)

Protocol

The term "Protocol" denotes a set of rules governing the format to be followed when transmitting information between communicating devices.

Public Pay Telephone

The term "Public Pay Telephone" denotes a switched coin line provided under the Public Telephone Service regulations of the Telephone Company General Exchange and/or Local Exchange Tariffs.

Query

The term "Query" denotes a Signaling System 7 (SS7) message requesting specific information from a data base.

Recoverable Cost

The term "Recoverable Cost" denotes the cost of specially constructed facilities for which the Telephone Company has a foreseeable reuse, either in place or elsewhere should the customer terminate service.

Registered Equipment

The term "Registered Equipment" denotes the customer's terminal equipment which complies with or has been approved within the Registration Provisions of Part 68 of the FCC Rules and Regulations.

Release Message

The term "Release Message" denotes an SS7 Message sent in either direction to indicate that a specific circuit is being released.

© 2024 Frontier Communications Parent, Inc. All rights reserved

2. GENERAL REGULATIONS (Cont'd)

2.6 Definitions (Cont'd)

Response

The term "Response" denotes an SS7 message representing a reply to a request for information contained in a query.

Route Mileage

The term "Route Mileage" denotes the actual Telephone Company provided facility mileage of a transmission circuit.

Scheduled Issue Date

The term "Scheduled Issue Date" denotes the date the Telephone Company is scheduled to issue the confirmed ASR to all associated work groups.

Secondary CDL

The term "Secondary CDL" denotes a Customer Designated Location (CDL) where FIA is terminated but is not connected to an Interexchange Carrier

Secondary Exchange Carrier

The term "Secondary Exchange Carrier" (SEC) denotes the telephone company in whose exchange a customer does not subscribe to FGA or BSA-A, or FGB or BSA-B service, but from whose exchange the customer's end users can call the interexchange switch or CDL of an IC in the primary exchange of another telephone company on a toll-free basis.

Secure Socket Layer (SSL)

The term "Secure Socket Layer ("SSL)" denotes a security protocol that provides data encryption, server authentication, message integrity, and optional client authentication for a TCP/IP connection.

Segment

The term "Segment" denotes a unit of user information consisting of 64 octets or less. Billing for Packet Switching Network Service is based on the number of segments transmitted within the user data field of a packet. The number of segments transmitted within a packet is limited only by the subscribed or negotiated maximum size of the user data field for the customer interface.

Semi-Public Pay Telephone

The term "Semi-Public Pay Telephone" denotes a switched coin line provided under the Semi-Public Telephone Service regulations of the Telephone Company General and/or Local Tariffs.

Service Control Point

The term "Service Control Point (SCP)" denotes an SS7 network control interface element between the Telephone Company's SS7 network and one or more data bases.

Service Date

The term "Service Date" denotes the date that the FIA is to be placed in service. A confirmed ASR is required to establish a service date.

© 2024 Frontier Communications Parent, Inc. All rights reserved

2. GENERAL REGULATIONS (Cont'd)

2.6 Definitions (Cont'd)

Service Switching Point (SSP)

The term "Service Switching Point" (SSP) denotes a signal point equipped with the ability to halt call process, formulate and send a SS7 query to a remote location and route the call based on information contained in the response.

Serving Wire Center

The term "Serving Wire Center" denotes the wire center from which the customer designated location would normally obtain dial tone from the Telephone Company. The "Serving Wire Center" is designated by the Telephone Company based upon the location being served.

Seven-Digit Manual Test Line

The term "Seven-Digit Manual Test Line" denotes a set of optional features for all Switched Access which allow the IC to select balance, milliwatt, and synchronous test lines of FGA and BSA-A, by manually dialing a seven-digit number over the associated Switched Access.

Short Circuit Test Line

The term "Short Circuit Test Line" denotes the end office circuit which provides an ac short circuit termination of the trunk or line by means of a capacitor of at least 4 microfarads.

Signaling Point

The term "Signaling Point (SP)" denotes an SS7 network interface element capable of originating and/or terminating SS7 messages.

Signaling System 7 (SS7)

The term "Signaling System 7 (SS7)" denotes the layered protocol used for standardized common channel signaling in the United States.

Signal Transfer Point (STP)

The term "Signal Transfer Point (STP)" denotes a packet switch which provides access to the Telephone Company's SS7 network and performs SS7 message signal routing and screening. The technical interface specifications, transmission specifications, and diversity requirements for interconnecting to the Telephone Company's SS7 network at the STP are as described in Technical Reference GR-905-CORE, Issue 11.

Signal Transfer Point (STP) Port

The term "Signal Transfer Point (STP) Port" denotes the physical point of termination and interconnection to the STP.

Statistical Multiplexing

A multiplexing technique in which timeslots are dynamically allocated on the basis of need rather than being predetermined; the data is typically transmitted on a first served basis.

© 2024 Frontier Communications Parent, Inc. All rights reserved

2. GENERAL REGULATIONS (Cont'd)

2.6 Definitions (Cont'd)

SONET

The term "SONET" (Synchronous Ethernet Private Line) denotes a family of fiber optic transmission bit rates starting at 51.84 Mpbs, designed to provided the flexibility needed to transport many digital signals with different capacities.

Synchronous Test Line

The term "Synchronous Test Line" denotes an arrangement of an end office which performs marginal operational tests of supervisory and ring-tripping functions.

Synchronous Transfer Module (STM)

STM-1 is the international equivalent SONET's OC3 transmission rate.

Synchronous Transport Signal (STS1)

The term "Synchronous Transport Signal" (STS1) denotes a 51.84 Mbps signal that is the electrical equivalent of the OC1 or a DS3 with additional Mbps devoted to SONET overhead information. An STS1 can carry a DS3 or 28 DS1s when specifically formatted (mapped). These DS1s may be accessed off-ring using DS3 to DS1 Multiplexing as set forth in Section 20 or at an enhanced node via a DS3 Transmux port.

Telecommunications Relay Service(TRS) Carriers

The term "Telecommunications Relay Service (TRS) Carriers" denotes companies/associations which provide two-way communications between an individual with a hearing or speech impairment who uses a Text Telephone or other nonvoice terminal, and an individual who does not use such a device.

Telecommunications Relay Service (TRS) Equal Access Interconnection

The term "Telecommunications Relay Service (TRS) Equal Access Interconnection" denotes the arrangement by which TRS Carriers interconnect with the Telephone Company to provide originating equal access to their end users. TRS Interconnection is provided from a TRS Carrier over Switched Access Entrance Facilities and Direct Trunked Transport facilities directly to a Telephone Company Access Tandem. The Telephone Company does not provide end office local switching functions with this interconnection arrangement.

Telecommunications Service Priority (TSP) System

The term "Telecommunications Service Priority (TSP) System" or "TSP System" refers to the regulatory, administrative and operational system authorizing and providing for priority treatment (i.e., the provisioning and restoration) of NSEP Services.

© 2024 Frontier Communications Parent, Inc. All rights reserved

2. GENERAL REGULATIONS (Cont'd)

2.6 Definitions (Cont'd)

Temporary Facilities

The term "Temporary Facilities" denotes facilities used to provide FIA to a customer for less than the minimum service period or less than one month, whichever is longer, or to provide FIA while permanent facilities are being constructed.

Terminating Direction

The term "Terminating Direction" denotes the use of Switched Access for the completion of calls from a CDL to an end user.

Termination Liability Period

The term "Termination Liability Period" denotes the length of time the customer is liable for a termination charge in the event the Individual Case Basis (ICB) arrangement is terminated.

Transmuxing

The term "Transmuxing" denotes the function of a DSR DS3 Transmux port which performs a DS3 to DS1 conversion at a DSR node. The DS3 to DS1 conversions allows a single DSR DS3 Transmux port to be associated with up to twenty-eight (28) VT1.5 mapped DSR DS1 ports. Transmuxing within the DSR network retains DS1 visibility allowing for full, proactive maintenance capability of DS1 signals.

Trunk

The term "Trunk" denotes a communications path connecting two switching systems in a network, used in an end-to-end connection.

Trunk Group

The term "Trunk Group" denotes a grouping of trunks which are traffic engineered as a unit for the establishment of connections between switching systems in which all of the communications paths are interchangeable.

Trunk Side Connection

The term "Trunk Side Connection" denotes the connection of a transmission path to the trunk side of an end office switch.

© 2024 Frontier Communications Parent, Inc. All rights reserved

2. GENERAL REGULATIONS (Cont'd)

2.6 Definitions (Cont'd)

U.S. Domestic Offshore Points

The term "U.S. Domestic Offshore Points" denotes any U.S. location that is not part of the conterminous United States.

V&H Coordinates Method

The term "V&H Coordinates Method" denotes a method of computing airline miles between two points by utilizing an established formula which is based on the Vertical (V) and Horizontal (H) coordinates of the two points.

Virtual EIS

The term "Virtual EIS" denotes an offering that enables customers to designate or specify equipment needed to terminate basic transmission facilities, including optical terminating equipment and multiplexers, to be located within or upon Telephone Company's wire center or access tandem buildings, and dedicated to such customers use.

Virtual Connection

The term "Virtual Connection" denotes a logical channel resulting from call establishment to a network address that exists until the call is terminated by either party.

WATS Serving Office

The term "WATS Serving Office" denotes a Telephone Company designated serving wire center where switching, screening and/or recording functions are performed in connection with a Special Access Line used with a Switching Interface as in 4.2.5(V) #.

Wire Center

The term "Wire Center" denotes a location in which one or more central office switches, and cross connection equipment used for the provision of Telephone Company telecommunications services, are located.

Wire Center Area

The term "Wire Center Area" denotes the geographic area served by a Wire Center through the use of central office switching equipment, cross connection equipment, and subscriber loops.

X.25 Protocol

The term "X.25 Protocol" denotes an interface between Data Terminal Equipment and Data Circuit Terminating Equipment for terminals operating in the packet mode on public data networks.

X.75 Protocol

The term "X.75 Protocol" denotes terminal and transit call control procedures and data transfer system on circuits between packet switched data networks.

The use of the terms WATS or WATS-type throughout this Guide is primarily for ordering purposes and is not intended to restrict the use of the customer services when ordering Special Access and Switched Access in combination.

© 2024 Frontier Communications Parent, Inc. All rights reserved

2. GENERAL REGULATIONS (Cont'd)

2.7 FIA Services Provided By More Than One Telephone Company

2.7.1 General

When Switched Transport or Special Transport service is provided by more than one telephone company, the telephone companies involved will mutually agree upon one of the billing methods based upon the type of access service and the interconnection arrangements between the telephone companies.

The telephone company will notify the customer which billing method will be used. The customer will place the ASR as in 3.3.

2.7.2 Reserved

2.7.3 Meet Point Billing

Meet Point Billing is required when an access service is provided by multiple Telephone Companies* for FGB, FGC, FGD, BSA-B, BSA-C and BSA-D Switched Access services and Special Access. It is optional for FGA and BSA-A Switched Access Services.

There are two Meet Point Billing Options -- Single Bill and Multiple Bill. The Telephone Company must notify the customer of:

- the Meet Point Billing Option that will be used,
- the Telephone Company(s) that will render the bill(s),
- the Telephone Company(s) to whom payment(s) should be remitted, and
- the Telephone Company(s) that will provide the bill inquiry function.

The Telephone Company shall provide such notification at the time that an ASR is placed requesting access service. Additionally, the Telephone Company shall provide this notice in writing 30 days in advance of any change.

(A) Reserved

* Meet Point Billing option guidelines, as contained in the MECAB Guidelines, may also be applied to FIA services provided by one exchange carrier in two or more states within a single LATA.

© 2024 Frontier Communications Parent, Inc. All rights reserved

2. GENERAL REGULATIONS (Cont'd)

2.7 FIA Services Provided By More Than One Telephone Company (Cont'd)

2.7.3 Meet Point Billing (Cont'd)

© 2024 Frontier Communications Parent, Inc. All rights reserved

2. GENERAL REGULATIONS (Cont'd)

2.7 FIA Services Provided By More Than One Telephone Company (Cont'd)

2.7.3 Meet Point Billing (Cont'd)

© 2024 Frontier Communications Parent, Inc. All rights reserved

2. GENERAL REGULATIONS (Cont'd)

2.7 FIA Services Provided By More Than One Telephone Company (Cont'd)

2.7.3 Meet Point Billing (Cont'd)

(B) Multiple Bill Option

The Multiple Bill option allows all Telephone Companies providing service to bill the customer for their portion of a jointly provided access service. Each Telephone Company will:

- determine its portion of the Switched Transport and/or Special Transport as set forth in 2.7.3(C);
- determine the applicable charges and bill in accordance with its tariff;
- include all recurring and nonrecurring rates and charges of its tariff; and
- forward the bill to the customer.

The customer will remit the payments directly to each Telephone Company.

(C) Meet Point Billing Mileage Calculation

Each Telephone Company's portion of the Switched Transport and/or Special Transport mileage will be determined as follows:

(1) For Switched Access Tandem-Switched Transport Services, determine the appropriate Tandem-Switched Transport - Facility total miles by computing the number of miles from the access tandem to the serving wire center in the Access Area (i.e., end user serving wire center, or WATS Serving Office), using the V&H method as set forth in the NECA Tariff FCC No. 4. For Special Access Services, and Switched Access Direct-Trunked Transport determine the appropriate Special Transport or Direct-Trunked Transport total miles by computing the number of miles between the serving wire centers involved (i.e., CDL serving wire center, Hub Wire Center, WATS Serving Office, end office, or access tandem) using the V&H method as set forth in the NECA Tariff FCC No. 4. Where the calculated miles include a fraction, the value is rounded up to the next full mile.

(2) Determine the billing percentage (BP), as set forth in the NECA Tariff FCC No. 4. This represents the portion of the Service provided by each telephone company.

(3) For Switched Access Tandem-Switched Transport; (a) multiply the number of access minutes of use times the number of airline miles as set forth in (1), times the BP of each Telephone Company as set forth in (2), times the Tandem-Switched Transport - Facility rate; (b) multiply the Tandem-Switched Transport - Termination rate times the number of access minutes times the quantity of terminations. When Terminating Tandem Switched Transport is provided through a Frontier Telephone ILEC access Tandem and the Terminating End Office is not owned by a Frontier Telephone ILEC Company or through an ILEC Access Tandem not owned by a Frontier Telephone ILEC Company and the Terminating End Office is owned by a Frontier Telephone ILEC Company, Terminating – Tandem 3rd Party rates are applicable, otherwise Terminating – Tandem End Office rates are applicable. When originating Tandem Switched Transport is provided, Originating rates are applicable.

© 2024 Frontier Communications Parent, Inc. All rights reserved

2. GENERAL REGULATIONS (Cont'd)

2.7 FIA Services Provided By More Than One Telephone Company (Cont'd)

2.7.3 Meet Point Billing (Cont'd)

(C) Meet Point Billing Mileage Calculation

(3) (Cont'd)

Example 1: Originating Switched Access
(See Diagram 1)

- Feature Group D Switched Access is ordered to End Office.

- Originating End Office and Access Tandem are in the operating territory of a Telep Company (TC-A).

- Customer Designated Premises is in the operating territory of a Telephone Compa B)

- Assumptions:
  - TC-A Direct Trunk Transport BP = 40%
  - TC-B Direct Trunk Transport BP = 60%
  - Direct Trunked Transport mileage = 26 mi.
  - Tandem Switched Transport mileage = 23 mi.

- Diagram 1

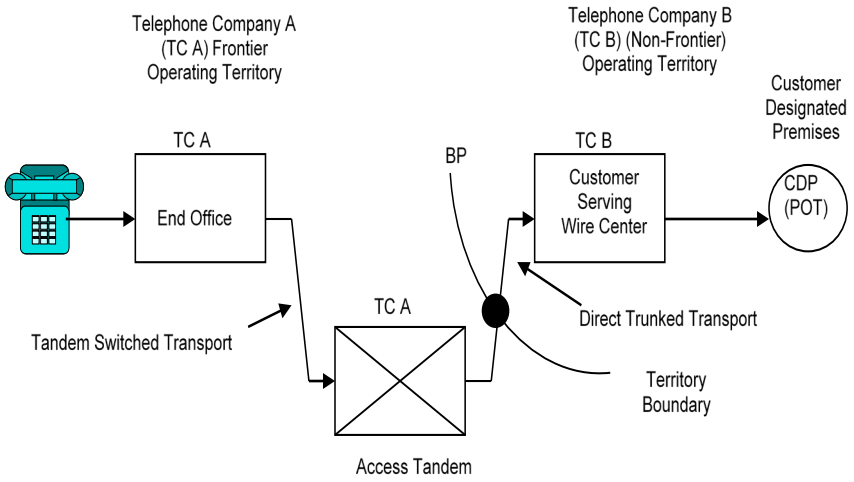

© 2024 Frontier Communications Parent, Inc. All rights reserved

2. GENERAL REGULATIONS (Cont'd)

2.7 FIA Services Provided By More Than One Telephone Company (Cont'd)

2.7.3 Meet Point Billing (Cont'd)

(C) Meet Point Billing Mileage Calculation

(3) (Cont'd)

Example 1: Originating Switched Access (Cont'd)
(See Diagram 1)

- Telephone Company A charges are:
  - End Office charges = 9,000 min. x EO rate
  - Tandem Switched Transport Facility charge = 9,000 min. x 23 mi. x TSF rate
  - Tandem Switched Transport Termination charge = 2 terminations x 9,000 min. x TST rate
  - Tandem Switching Rate = 9,000 min. x TS rate
  - Direct Trunked Facility charge = 26 mi. x DTF rate x 40%
  - Direct Trunked Termination charge = 1 termination x DTT rate
  - Shared Multiplexing charge = 9,000 min. x SM rate

Example 2: Terminating Switched Access – Tandem 3rd Party
(See Diagram 2A and 2B)

- Feature Group D Switched Access is ordered to End Office.

- Terminating Access Tandem is owned by Frontier Telephone ILEC Companies (TC-A End Office is owned by a non-Frontier Telephone Company (TC –B).

- Assumptions:
  - *TC-A Direct Trunk Transport BP = 40%
  - *TC-B Direct Trunk Transport BP = 60%
  - Direct Trunk Transport mileage = 26 mi.
  - TC-A Tandem Switched Transport BP = 20%
  - TC-B Tandem Switched Transport BP = 80%
  - Tandem Switched Transport mileage = 23 mi.

*Where applicable see Diagram 2A

© 2024 Frontier Communications Parent, Inc. All rights reserved

2. GENERAL REGULATIONS (Cont'd)

2.7 FIA Services Provided By More Than One Telephone Company (Cont'd)

2.7.3 Meet Point Billing (Cont'd)

(C) Meet Point Billing Mileage Calculation

(3) (Cont'd)

Example 2: Terminating Switched Access – Tandem 3rd Party (Cont'd)
(See Diagram 2A and 2B)

- Diagram 2A

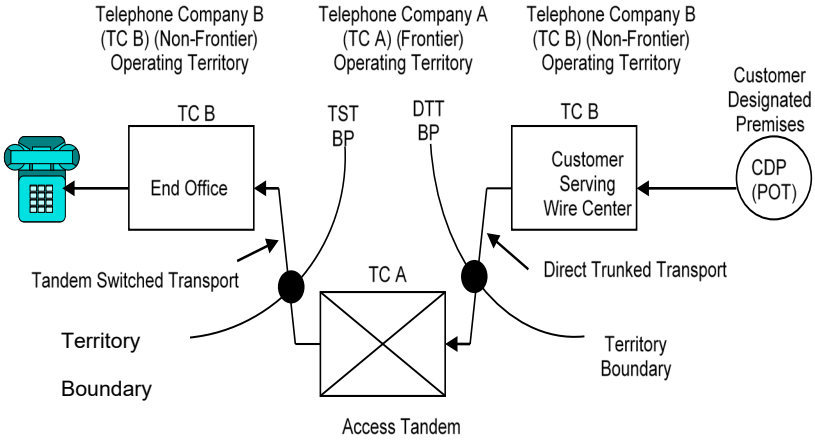

- Diagram 2B

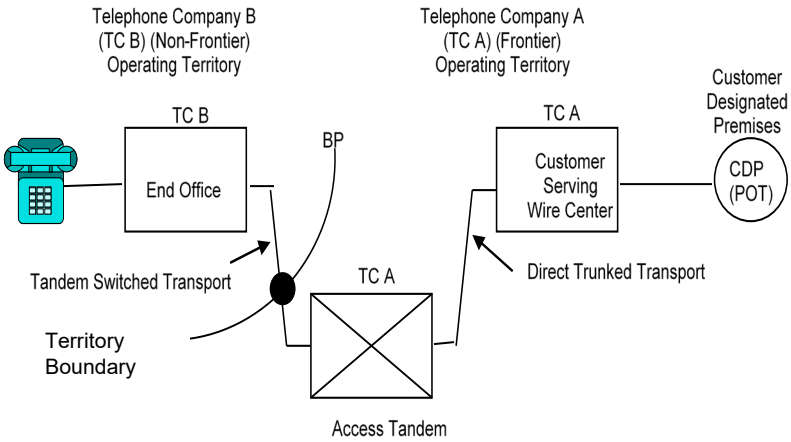

© 2024 Frontier Communications Parent, Inc. All rights reserved

2. GENERAL REGULATIONS (Cont'd)

2.7 FIA Services Provided By More Than One Telephone Company (Cont'd)

2.7.3 Meet Point Billing (Cont'd)

(C) Meet Point Billing Mileage Calculation

(3) (Cont'd)

Example 2: Terminating Switched Access – Tandem 3rd Party (Cont'd)
(See Diagram 2A and 2B)

- Telephone Company A charges are:

- Tandem Switched Transport Facility-3rd Party charge
  = 9,000 min. x 23 mi. x TSF–3rd Party rate x 20%

- Tandem Switched Transport Termination-3rd Party charge
  = 1 termination x 9,000 min. x TST – 3rd Party rate

- Tandem Switching–3rd Party Rate = 9,000 min. x TS-3rd Party rate

  - Direct Trunked Facility charge
    2A = 26 miles. x DTF rate x 40%
    2B = 26 miles. x DTF rate

  - Direct Trunked Termination charge
    2A = 1 termination x DTT rate
    2B = 2 termination x DTT rate

  - Shared Multiplexing 3rd Party Charge = 9,000 min. x SM-3rd Party rate

© 2024 Frontier Communications Parent, Inc. All rights reserved

2. GENERAL REGULATIONS (Cont'd)

2.7 FIA Services Provided By More Than One Telephone Company (Cont'd)

2.7.3 Meet Point Billing (Cont'd)

(C) Meet Point Billing Mileage Calculation

(3) (Cont'd)

Example 3: Terminating Switched Access - Tandem End Office
(See Diagram 3)

- Feature Group D Switched Access is ordered to End Office.

- Terminating End Office and Access Tandem are both owned by Frontier Telephc Companies (TC-A).

- Assumptions:
  - TC-A Direct Trunk Transport BP = 40%
  - TC-B Direct Trunk Transport BP = 60%
  - Direct Trunk Transport mileage = 26 mi.
  - Tandem Switched Transport mileage = 23 mi.

- Diagram 3

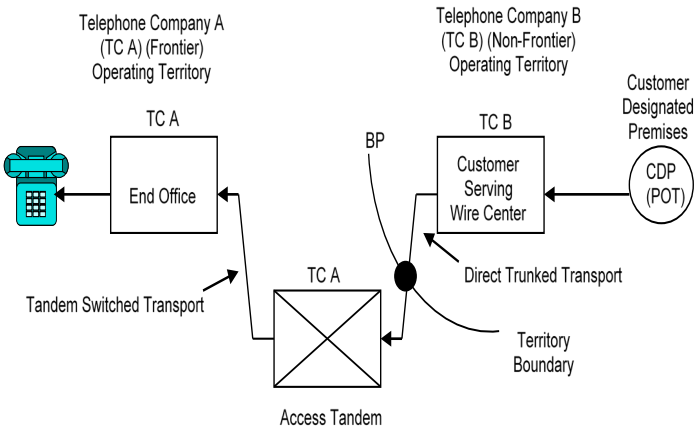

© 2024 Frontier Communications Parent, Inc. All rights reserved

2. GENERAL REGULATIONS (Cont'd)

2.7 FIA Services Provided By More Than One Telephone Company (Cont'd)

2.7.3 Meet Point Billing (Cont'd)

(C) Meet Point Billing Mileage Calculation

(3) (Cont'd)

Example 3 –Terminating Switched Access Tandem End Office (Cont'd)
(See Diagram 3)

- Telephone Company A charges are:

- End Office Charges = 9,000 min. x EO rate

- Tandem Switched Facility – End Office charge
  = 9,000 min. x 23 mi. x TSF-End Office rate.

- Tandem Switched Transport Termination –End Office charge
  = 2 terminations x 9.000 min. x TST-End Office rate.

- Tandem Switching – End Office charge
  = 9,000 min. x TS-End Office rate

- Direct Trunked Facility Charge
  = 26 miles x DTF rate x 40%

- Direct Trunked Termination charge
  = 1 termination x DTT rate

- Shared Multiplexing charge
  = 9,000 min. x SM-End Office rate

© 2024 Frontier Communications Parent, Inc. All rights reserved

2. GENERAL REGULATIONS (Cont'd)

2.7 FIA Services Provided By More Than One Telephone Company (Cont'd)

2.7.3 Meet Point Billing (Cont'd)

(C) Meet Point Billing Mileage Calculation

(3) (Cont'd)

Example 4: Terminating Switched Access-Tandem 3rd Party
(See Diagram 4)

- Feature Group D Switched Access is ordered to End Office.
- End Office is owned by Frontier Telephone Company (TC-A).
- Access Tandem is owned by a non-Frontier Telephone ILEC Company (TC-B).
- Diagram 4

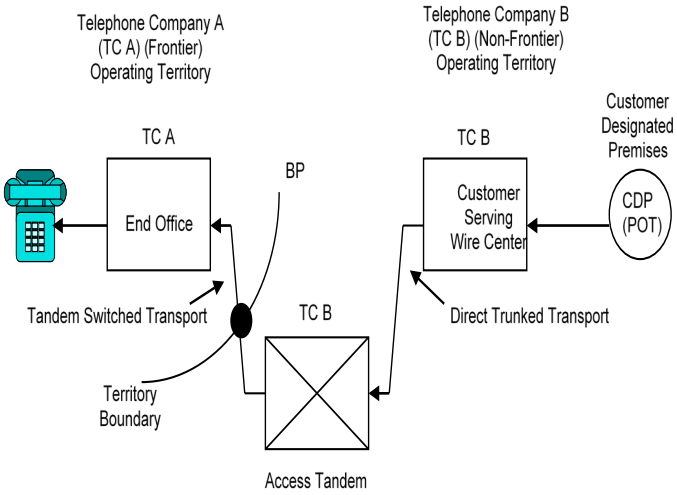

BP = Billing Percentage

© 2024 Frontier Communications Parent, Inc. All rights reserved

2. GENERAL REGULATIONS (Cont'd)

2.7 FIA Services Provided By More Than One Telephone Company (Cont'd)

2.7.3 Meet Point Billing (Cont'd)

(C) Meet Point Billing Mileage Calculation

(3) (Cont'd)

Example 4: Terminating Switched Access-Tandem 3rd Party (Cont'd)
(See Diagram 4)

- Telephone Company A charges are:

- End Office charges = 9,000 min x EO rate

- Tandem Switched Facility -3rd Party charge
  = 9,000 min. x 23 mi. x TSF-3rd Party rate x 80%

- Tandem Switched Termination -3rd party charge
  = 1 termination x 9,000 min. x TST-3rd Party rate

© 2024 Frontier Communications Parent, Inc. All rights reserved

2. GENERAL REGULATIONS (Cont'd)

2.7 FIA Services Provided By More Than One Telephone Company (Cont'd)

2.7.3 Meet Point Billing (Cont'd)

(C) Meet Point Billing Mileage Calculation

(3) (Cont'd)

Example 5: Originating Switched Access - Frontier Telephone ILEC Company owns only the Office.
(See Diagram 5)

- Feature Group D Switched Access is ordered to End Office.

- End Office is owned by Frontier Telephone Companies (TC-A).

- Access Tandem is owned by a non-Frontier Telephone ILEC Company (TC-B)

- Assumptions:
  - Direct Trunk Transport mileage = 26 mi.
  - TC-A Tandem Switched Transport BP = 80%
  - TC-B Tandem Switched Transport BP = 20%
  - Tandem Switched Transport mileage = 23 mi.

- Diagram 5

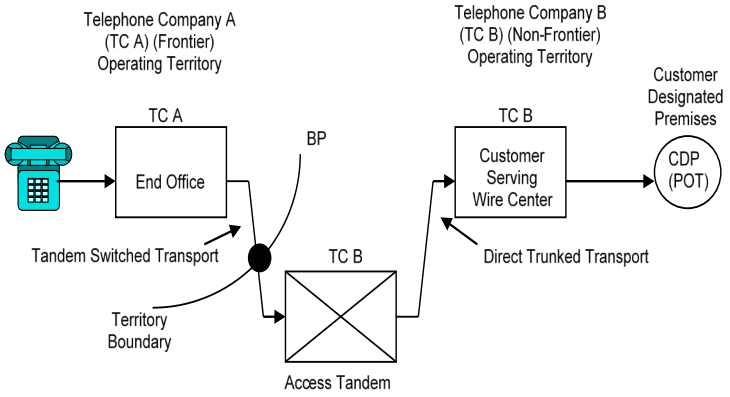

BP = Billing Percentage

© 2024 Frontier Communications Parent, Inc. All rights reserved

2. GENERAL REGULATIONS (Cont'd)

2.7 FIA Services Provided By More Than One Telephone Company (Cont'd)

2.7.3 Meet Point Billing (Cont'd)

(C) Meet Point Billing Mileage Calculation

(3) (Cont'd)

Example 5: Originating Switched Access - Frontier Telephone ILEC Company owns only th Office. (Cont'd)
(See Diagram 5)

- Telephone Company A charges are:

- End Office charges = 9,000 min. x EO rate

- Tandem Switched Transport Facility charge
  = 9,000 min. x 23 mi. x TSF rate x 80%.

- Tandem Switched Transport Termination charge
  = 1 termination x 9.000 min. x TST rate.

(4) For Special Access and for Switched Access Direct-Trunked Transport, multiply the number of airline miles as in (1), times the BP for each telephone company as in (2), times the Special Transport or Direct-Trunked Transport Facility rate elements. For DS1 and DS3 Special Transport and DS1 and DS3 Direct-Trunked Transport, multiply the Special Transport Termination or Direct-Trunked Transport Termination rate times the number of terminations provided by the Telephone Company.

© 2024 Frontier Communications Parent, Inc. All rights reserved

2. GENERAL REGULATIONS (Cont'd)

2.7 FIA Services Provided By More Than One Telephone Company (Cont'd)

2.7.3 Meet Point Billing (Cont'd)

(C) Meet Point Billing Mileage Calculation (Cont'd)

(5) For Dedicated SONET Optical Transport Service (DSOTS) as set forth in Section 20.1 following where the ring is provided within the operating territories of two or more telephone companies, DSOTS ring mileage is determined using the methodology illustrated below.

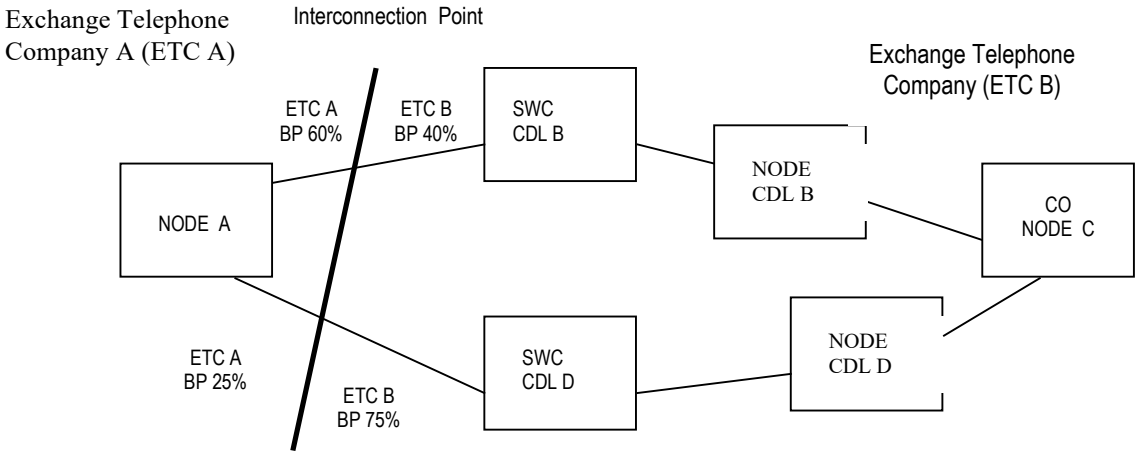

Step 1 – Calculate the total ring mileage by summing the mileage connecting all locations and devices (Node A to SWC CDL B) + (SWC CDL B to Node CDL B) + (Node CDL B to CO Node C) + (CO Node C to Node CDL D) + (Node CDL D to SWC CDL D) + (SWC Node D to Node A), If the total ring mileage includes a fraction of a mile, the value is rounded up to the next full mile.

Step 2 – Determine the Telephone Company (ETCB) portion of the total ring mileage by first multiplying the mileage between Node A and the SWC of CDL B by the billing percentage (BP) for ETC B (40%) and between the SWC CDL D and Node A by the BP for ETCB (75%) and adding these adjusted mileage segments to the remaining mileage segments on the ring (SWC CDL B to Node CDL B) + (Node CDL B to CO Node C) + (CO Node C to Node CDL D) + (Node CDL D to SWC CDL D). If this ring mileage calculation includes a fraction of a mile, the value is rounded up to the next full mile. If the Telephone Company (ETCB) portion of the total ring mileage is 20 miles or less, utilize the process set forth in Step 3 following to determine the mileage charges for each exchange telephone company involved. If the Telephone Company (ETCB) portion of the total ring mileage is 21 miles or over, utilize the process set forth in Step 4 through Step 6 following to determine the mileage charges for each exchange telephone company involved.

© 2024 Frontier Communications Parent, Inc. All rights reserved

2. GENERAL REGULATIONS (Cont'd)

2.7 FIA Services Provided By More Than One Telephone Company (Cont'd)

2.7.3 Meet Point Billing (Cont'd)

(C) Meet Point Billing Mileage Calculation (Cont'd)

(5) (Cont'd)

Step 3 – Develop a Ring BP by dividing the Telephone Company (ETCB) portion of the total ring miles determined in Step 2 by the total ring miles determined in Step 1. Next apply this Ring BP to the total ring mileage for ECTB determined in Step 2 and apply the rates set forth in 20.1(K) for 1-20 total ring miles.

Step 4 - If the Telephone Company (ETCB) portion of the total ring miles determined in Step 2 is 21 miles or more, apply the 1-20 ring mileage rate set forth in 20.1(K) following to the first 20 miles.

Step 5 - Determine the remaining Telephone Company (ETCB) portion of the total ring mileage by subtracting 20 miles from the Telephone Company (ETCB) portion of the total ring mileage determined in Step 2. Next apply the rates set forth in 20.1(K) for mile 21 and over up to the Telephone Company (ETCB) portion of the total ring miles.

Step 6 - The total charge for ring mileage is the sum of the charges for the first 20 miles calculated in Step 4 plus the remaining miles billed at the rate for 21 miles and over as calculated in this Step 5.

© 2024 Frontier Communications Parent, Inc. All rights reserved

2. GENERAL REGULATIONS (Cont'd)

2.7 FIA Services Provided By More Than One Telephone Company (Cont'd)

2.7.3 Meet Point Billing (Cont'd)

All other appropriate recurring and nonrecurring charges in each telephone company's Access tariff are applicable.

(E) Where the Tandem-Switched Transport - Facility is provided by more than one telephone company, the Tandem-Switched Transport - Termination rate applies for the termination at the Telephone Company end of the Tandem-Switched Transport (i.e., the first point of switching or the end office serving the end user). The Tandem-Switched Transport - Termination rate will not apply when the Telephone Company is the intermediate provider of the Switched Transport Facility.

(F) The Interconnection charge for Switched Transport shall be billed by the Telephone Company in whose territory the end office is located.

(G) The Shared Trunk Port for Tandem-Switched Transport shall be billed by the Telephone Company in whose territory the end office is located.

(H) For tandem routed trunks, the dedicated trunk port shall be billed by the Telephone Company owning the tandem. For end office direct routed trunks, the dedicated trunk port shall be billed by the Telephone Company owning the end office on a single bill, single tariff or multiple bill, multiple tariff meet point billing arrangement.

The shared multiplexing charge will be assessed to the interexchange carrier by the Telephone Company owning the access tandem under the multiple bill, multiple tariff meet point billing option, and to the initial billing company, by the Telephone Company owning the access tandem, under the single bill, single tariff meet point billing option.

© 2024 Frontier Communications Parent, Inc. All rights reserved

2. GENERAL REGULATIONS (Cont'd)

2.7 FIA Services Provided By More Than One Telephone Company (Cont'd)

2.7.4 Zone Density Meet Point Billing

When the Switched Transport facility (Direct-Trunked or Tandem-Switched Transport) and/or Special Transport is provided by more than one telephone company the following regulations apply:

(A) Switched Access

(1) End Office or Access Tandem is in the Telephone Company's Territory:

(a) Distance sensitive transport provided by the Telephone Company will be rated according to the zone of the Telephone Company's end office or Telephone Company's access tandem.

(b) The transport termination provided by the Telephone Company will be rated according to the zone assigned to the Telephone Company's end office or Telephone Company's access tandem.

(c) Tandem Switching will be rated according to the zone of the Telephone Company's access tandem.

(2) The Telephone Company is intermediate provider of the transport:

(a) Distance sensitive transport will be rated at Zone 1/Band A rates.

(b) The transport termination rate does not apply if the Telephone Company is the intermediate provider of the transport facility.

(B) Special Access

(1) End Office or Access Tandem is in the Telephone Company's Territory

(a) Special transport provided by the Telephone Company will be rated according to the zone of the Telephone Company's end office or Telephone Company's access tandem.

(b) The transport termination provided by the Telephone Company will be rated according to the zone assigned to the Telephone Company's end office or Telephone Company's access tandem.

(2) The Telephone Company is intermediate provider of the transport.

(a) Distance Sensitive Transport will be rated at Zone 1/Band A rates.

(b) The transport termination rate does not apply if the Telephone Company is the intermediate provider of the transport facility.

© 2024 Frontier Communications Parent, Inc. All rights reserved

2. GENERAL REGULATIONS (Cont'd)

2.8 Service Level Agreements

2.8.1 Basic Service Level Agreements (Basic SLAs)

Regulations pertaining to Basic SLAs are contained in this Guide as specified following:

Description	Tariff Reference
Credit Allowance for FIA Interruptions	2.8.1.1

(D)

© 2023 Frontier Communications Parent, Inc. All rights reserved

2. GENERAL REGULATIONS (Cont'd)

2.8 Service Level Agreements (Cont'd)

2.8.1 Basic Service Level Agreements (Basic SLAs) (Cont'd)

2.8.1.1 Credit Allowance for FIA Interruptions

(A) General

A FIA is interrupted when it becomes unusable to the customer because of a failure of a component used to furnish FIA under this Guide, or when the service is preempted as a result of invoking NSEP Treatment or when the application of protective controls interrupt all transmission paths as set forth in 4.2.9 following. An interruption period starts when the Telephone Company personnel are notified by the customer that the FIA is inoperative.

The credit allowance(s) for an interruption or for a series of interruptions will be computed based upon the billing method which applies to the service being credited. In no case will the credit allowance for service interruptions exceed the applicable charges for the billing period during which the interruption occurred.

Subject to Section 2.8.4(B) following, in case of an interruption to any service, credit allowance for the period of interruption shall be as follows:

(1) For Special Access services other than Program Audio, Videoband and Expanded Interconnection, and for Switched Access Entrance Facilities, Direct-Trunked Transport and Multiplexing services a credit allowance will be made for an interruption period of 30 minutes or more. The allowance will be calculated at the rate of 1/1440 of the monthly charge for the portion of the FIA affected, for each 30 minutes or major fraction thereof that the interruption continues. A major fraction is considered to be sixteen minutes or more beyond the 30 minute period.

(2) For Program Audio and Videoband Special Access services, a credit allowance will be made for an interruption of 30 seconds or more. Two or more such interruptions occurring during a period of 5 consecutive minutes shall be considered as one interruption. The allowance will be calculated as follows:

(a) For Program Audio Service provided at monthly rates, the credit will be at the rate of 1/8640 of the monthly service rate.
(b) For Program Audio Service provided at daily rates, the credit will be at the rate of 1/288 of the daily rate.
(c) For Temporary Videoband Service provided at hourly rates, the credit will be at 1/12 of the hourly rate.

© 2022 Frontier Communications Parent, Inc. All rights reserved

2. GENERAL REGULATIONS (Cont'd)

2.8 Service Level Agreements (Cont'd)

2.8.1 Basic Service Level Agreements (Basic SLAs) (Cont'd)

2.8.1.1 Credit Allowance for FIA Interruptions (Cont'd)

(A) General (Cont'd)

(3) Except as noted, all Special Access Services will be eligible for a credit allowance for each occurrence of a service interruption period greater than 30 minutes. The maximum credit allowance will be $200.00 for each out of service condition within the Telephone Company's facilities and will not exceed the monthly charge for the interrupted service. The credit allowance will not be applied more than once per calendar month. This credit allowance is applicable in all jurisdictions. The credit allowance is in addition to the credit allowance in 2.8.1.1(A)(1) and 2.8.1.1(A)(2). A credit allowance will not be extended in accordance with conditions in 2.1.3(G) and 2.8.1.1(B) for repair of Telephone Company owned facilities.

The exceptions to this credit allowance are, Part-time Program Audio Service in 5.2.3, Videoband I and II Services in 5.2.4, Miscellaneous Special Access Services in 5.8 and Individual Case Basis Services in 5.9.

* Section 2.8.1.1(A)(3) is not available for Special Access Services installed after June 1, 2006. The preceding sentence applies to both Special Access Services that are provided on a month-to-month basis and Special Access Services that are provided under a Discount Plan (as defined below).

For Special Access Services installed on or before June 1, 2006, Section 2.8.1.1(A)(3) will not be available as follows:

(a) For Special Access Services provided on a month-to-month basis, after June 1, 2006.

(b) For Special Access Services provided under a Discount Plan (as defined below), after the date of expiration, termination, or cancellation of the Discount Plan commitment period that is in effect on June 1, 2006.

(c) For Special Access Services provided under a Discount Plan (as defined below) that are covered by a National Service Level Agreement Plan, during the period that a customer participates in such National Service Level Agreement Plan. The customer has the option to subscribe to a National Service Level Agreement Plan as set forth in Section 2.8.3 following. Nothing in this paragraph (c) shall in any way limit the effect of paragraph (b) preceding.

As used in this note, "Discount Plan" means any tariff arrangement for the provision of Special Access Services other than on a month-to-month basis.

For any month for which a Special Access Service receives a credit allowance under Section 2.8.1.1(A)(3), that Special Access Service shall not receive a credit allowance under Section 2.8.1.1 (A)(4).

© 2022 Frontier Communications Parent, Inc. All rights reserved

2. GENERAL REGULATIONS (Cont'd)

2.8 Service Level Agreements (Cont'd)

2.8.1 Basic Service Level Agreements (Basic SLAs) (Cont'd)

2.8.1.1 Credit Allowance for FIA Interruptions (Cont'd)

(A) General (Cont'd)

(4) For certain Special Access services, a Special Access Service Guarantee (SASG) credit allowance will apply in the event that such services experience a service interruption of four or more consecutive hours except as specified in 2.8.4(B) following. The SASG credit allowance will apply to Voiceband, monthly Program Audio, Video Digital Transport Service-Type II, Digital Data Service (DDS), and High Capacity DS1 & DS3 Special Access services (collectively, Special Access Services).

The customer has the option to subscribe to a National SLA Plan as set forth in Section 2.8.3 following. When a customer subscribes to a National SLA Plan, SASG credit allowances under this Section 2.8.1.1(A)(4) do not apply to services covered by the National SLA Plan.

If a Special Access Service is eligible for an SASG credit allowance, the Telephone Company shall provide the applicable credit amount as set forth in the table following. The Telephone Company shall bill customer the applicable monthly rate for the Special Access Service, and if customer is eligible to receive the SASG credit allowance, the customer shall receive the SASG credit in a later invoice. Except as stated in this Guide, the SASG credit allowance is in addition to any other credit allowances available under this Section 2.8.1.1. The maximum amount of all credit allowances available under this Section 2.8.1.1 for a Special Access Service for a given billing period shall not exceed the total applicable monthly charge paid by the customer for such Special Access Service. The monthly charge will consist of all applicable rate elements charged to the circuit experiencing the service interruption. The SASG credit allowance can only be applied once per month on a per circuit basis. For multi-point circuits, the SASG credit allowance will apply to each leg of the circuit that experiences a service interruption.

© 2022 Frontier Communications Parent, Inc. All rights reserved

2. GENERAL REGULATIONS (Cont'd)

2.8 Service Level Agreements (Cont'd)

2.8.1 Basic Service Level Agreements (Basic SLAs) (Cont'd)

2.8.1.1 Credit Allowance for FIA Interruptions (Cont'd)

(A) General (Cont'd)

(4) (Cont'd)

The Special Access Service Guarantee (SASG) credit allowance, for each applicable service is listed below and applies to all states:

Service	SASG (per circuit)
Voiceband	$ 20.00
Full-time Program Audio (provided at monthly rates)	
200 – 3500 Hz	10.00
100 – 5000 Hz	15.00
50 – 8000 Hz	20.00
50 – 15000 Hz	25.00
Video Digital Transport Service – Type II (monthly, 1-year, 2-year, 3-year & 5-year plans)	100.00
Digital Data Service (DDS)	
2.4 kbps	40.00
4.8 kbps	45.00
9.6 kbps	50.00
19.2 kbps	55.00
56.0 kbps	60.00
64.0 kbps	65.00
High Capacity	
DS1	160.00
DS3	400.00

© 2022 Frontier Communications Parent, Inc. All rights reserved

2. GENERAL REGULATIONS (Cont'd)

2.8 Service Level Agreements (Cont'd)

2.8.1 Basic Service Level Agreements (Basic SLAs) (Cont'd)

2.8.1.1 Credit Allowance for FIA Interruptions (Cont'd)

(A) General (Cont'd)

(5) For Switched Access service, billed using assumed minutes of use, a credit allowance will be made for an interruption of 24 hours or more. The credit allowance will be calculated at 1/30 of the assumed minutes of use charge for each 24 hours or major fraction thereof that the interruption continues. A major fraction is considered to be 13 hours. No credit will be given where Switched Access billing is based on actual usage.

(6) For Switched Access service interrupted by an NXX isolation a credit will be given the billed customer of record utilizing the following formula:

300 Minutes of Use X the appropriate switched access rate X the number of trunks out of service = the credit allowance

NXX isolation is defined as a situation whereby a customer in an NPA-NXX is unable to originate a call to the carrier network and/ or receive a call from the carrier network.

The credit will apply when an out of service condition of 30 minutes or more occurs within the Telephone Company's switched facilities. The credit allowance will not be applied more than once per calendar month. A credit allowance will not be extended in accordance with conditions in 2.1.3(G) and 2.8.4(B) for repair of Telephone Company owned facilities.

(7) Switched Access Service Entrance Facilities, Direct-Trunked Transport and Multiplexing will be eligible for a credit allowance for each occurrence of a service interruption period greater than 30 minutes. The maximum credit allowance will be $200.00 for each out of service condition within the Telephone Company's facilities. The credit allowance will not exceed the monthly charge for the interrupted service and will not be applied more than once per calendar month. This credit allowance is applicable in all jurisdictions. A credit allowance will not be extended in accordance with conditions in 2.1.3(G) and 2.8.4(B) for repair of Telephone Company owned facilities.

(8) For Common Channel Signaling System 7 (CCS7) Access Service, described in 4.2.10, a credit allowance will be made for an interruption period of 30 minutes or more. The allowance will be calculated at the rate of 1/1440 of the monthly charge for the portion of the service affected, for each 30 minutes or major fraction thereof that the interruption continues. A major fraction is considered to be 16 minutes or more beyond the 30-minute period.

© 2022 Frontier Communications Parent, Inc. All rights reserved

2. GENERAL REGULATIONS (Cont'd)

2.8 Service Level Agreements (Cont'd)

2.8.1 Basic Service Level Agreements (Basic SLAs) (Cont'd)

2.8.1.1 Credit Allowance for FIA Interruptions (Cont'd)

(A) General (Cont'd)

(9) An out of service credit will apply for the following Ethernet Private Line rate elements, where applicable, should the service be interrupted due to the Telephone Company's system's failure to switch to protected electronics and/or facilities within one (1) second in those locations connected to the Telephone Company surveillance system unless such interruptions are a result of conditions outside the Telephone Company's control:

- Shared Ring Connect
- Ring Connect
- LAN-wide Premium Transport
- Ring-per-mile Transport
- ON-net Banded Optical Transport provisioned via ring topology
- Custom Connect configured via a ring topology

Credit will be predicated on information provided by the Telephone Company's and the customer's network surveillance systems associated with this service arrangement. The Telephone Company and the customer shall each have the opportunity to perform an annual inspection of the other party's network surveillance system to confirm its accuracy. The out-of-service credit will be calculated based on the monthly rate element charges of that portion of the inter-office network rendered inoperative. A maximum limit of one months recurring charge per rate element will be allotted for an interruption or series of interruptions within any one billing period.

The credit allowance for all other Ethernet Private Line access services will be as shown in 2.8.1.1(A)(1) and (3).

(10) For Dedicated SONET Optical Transport Service (DSOTS) nodes and network optimization, any single service outage of four hours or more due solely to a Telephone Company facility failure will result in a credit of 100% of the monthly rates for the applicable DSOTS node or network optimization devices affected. Only one such credit is allowed in a single month's billing period.

For DSOTS Optical Transport Channels, the following credits will be applied.

- For protected Optical Transport Channels, any Telephone Company facility failure which is not restored within 1 minute will result in a credit of 100% of the monthly rate for the applicable protected optical channels affected. Only one such credit is allowed in a single month's billing period.
- For unprotected Optical Transport Channels, no credit applies for a service outage on these channels for which no protection is provided by the Telephone Company.

© 2022 Frontier Communications Parent, Inc. All rights reserved

2. GENERAL REGULATIONS (Cont'd)

2.8 Service Level Agreements (Cont'd)

2.8.1 Basic Service Level Agreements (Basic SLAs) (Cont'd)

2.8.1.1 Credit Allowance for FIA Interruptions (Cont'd)

(A) General (Cont'd)

(10) (Cont'd)

- When one or more channels utilizing a multi-port interface card require(s) maintenance, all channels provisioned over that multi-port interface card will be interrupted. No credit will be made for such periods during which all channels on the multi-port interface card are interrupted to allow the Telephone Company to perform required maintenance.

(11) For Ethernet Private Line (EPL) Service, any outage due solely to a Telephone Company facility failure will result in a credit of 100 % of the monthly recurring charges for the portion of the service affected. Only one such credit is allowed in a single month's billing period.

The following credits will be applied.

- For protected On-Net Channel Extensions and On-Net Channel Mileage, a credit of 100% of one month's recurring charge for the EPL service will apply for any outage that exceeds one minute.

- For unprotected On-Net Channel Extensions a credit of 100% of one month's recurring charge for the EPLservice will apply if the total outage time exceeds 4 hours.

- For EPL services that consist of both unprotected and protected service components, the credit allowance that applies for each outage will be based on the credit allowance provisions for unprotected channels.

© 2022 Frontier Communications Parent, Inc. All rights reserved

2. GENERAL REGULATIONS (Cont'd)

2.8 Service Level Agreements (Cont'd)

2.8.1 Basic Service Level Agreements (Basic SLAs) (Cont'd)

2.8.1.1 Credit Allowance for FIA Interruptions (Cont'd)

(A) General (Cont'd)

(12) For Dedicated SONET Optical Transport Service (DSOTS) Service, any outage greater than one (1) minute and due solely to a Telephone Company facility failure will result in a credit of 100% of the monthly rate for the applicable rate elements of the affected service. Only one such credit is allowed in a single month's billing period. When DSR as set forth in Section 20.2 following is arranged with subtending rings, a credit allowance for a service interruption is applied independently to each ring. For example, if the main DSR becomes interrupted and is eligible for a credit allowance, no credit allowance is due on the subtending ring(s) associated with that main ring unless service on the subtending ring(s) is also interrupted.

(13) For Dedicated SONET Entrance Facilities, any single service outage of one (1) hour or more and due solely to a Telephone Company facility failure will result in a credit of one hundred percent (100%) of the monthly rate for the applicable DSEF rate elements affected. Only one such credit is allowed in a single month's billing period.

(B) When a Credit Allowance Does Not Apply

Services will not be eligible for credits when any of the conditions set forth in Section 2.8.4(B) following exist.

(C) Use of an Alternative Service Provided by the Telephone Company

Should the customer elect to use an alternative service provided by the Telephone Company during the period that a FIA is interrupted, the customer must pay the tariffed rates and charges for the alternative service used.

Temporary Surrender of a FIA

In certain instances, the customer may be requested to surrender a FIA for purposes other than maintenance, testing or activity relating to an ASR. If the customer consents, or in the instance of preemption under NSEP Treatment as set forth in Section 2.1.9 preceding, a credit allowance will be granted. The credit allowance will be determined in accordance with 2.8.1.1(A) and (B) preceding.

© 2022 Frontier Communications Parent, Inc. All rights reserved

2. GENERAL REGULATIONS (Cont'd)

2.8 Service Level Agreements (Cont'd)

2.8.1 Basic Service Level Agreements (Basic SLAs) (Cont'd)

2.8.1.2 Reserved For Future Use (C)

© 2023 Frontier Communications Parent, Inc. All rights reserved

2. GENERAL REGULATIONS (Cont'd)

2.8 Service Level Agreements (Cont'd)

2.8.2 Enhanced Service Level Agreements (Enhanced SLAs)

Regulations pertaining to Enhanced SLAs are contained in this Guide as specified following:

Description	Tariff Reference	
Integrated Optical Service Rider SLAs	2.8.2.1	(D)
(Reserved for Future Use)	2.8.2.2	(D)

© 2023 Frontier Communications Parent, Inc. All rights reserved

2. GENERAL REGULATIONS (Cont'd)

2.8 Service Level Agreements (Cont'd)

2.8.2 Enhanced Service Level Agreements (Enhanced SLAs)

2.8.2.1 Integrated Optical Service Rider SLAs

(A) General

(1) With the exception of those Integrated Optical Service Riders provided subject to Section 24.1.3 following, the SLAs set forth in this Section 2.8.2.1 apply to all other Integrated Optical Service Riders set forth in Section 24.1 following ("Qualifying Services").

(2) The monthly recurring rate(s) for the Qualifying Service are the Integrated Optical Service Rider Appearances.

(3) To receive credit, the Telephone Company must receive from the customer a written request for credit within sixty (60) calendar days of the end of the calendar month in which the SLA threshold was missed. The customer's request for credit must be submitted to the appropriate Telephone Company in a manner mutually agreed upon by the Telephone Company and the customer. The request must include a list of the identification numbers of all impacted circuits.

(B) Availability

(1) Availability refers to the percentage of time over a calendar month that a Qualifying Service is able to transmit data over the Telephone Company's integrated optical service. A Qualifying Service is unavailable if data cannot be transmitted because of a failure of a facility component within the Telephone Company's integrated optical service that is used to furnish the Qualifying Service provided under this Guide.

(2) Availability is calculated as follows: Availability = (1440 X Number of Days in Month) – (Number of Minutes the Service is unavailable during Month)/(1440 X Number of Days in Month). The number of minutes the Service is unavailable is as determined by the Telephone Company.

© 2022 Frontier Communications Parent, Inc. All rights reserved

2. GENERAL REGULATIONS (Cont'd)

2.8 Service Level Agreements (Cont'd)

2.8.2 Enhanced Service Level Agreements (Enhanced SLAs) (Cont'd)

2.8.2.1 Integrated Optical Service Rider SLAs (Cont'd)

(B) Availability (Cont'd)

(3) The Telephone Company threshold for Availability under this Section in a calendar month is 99.999%.

(4) If Availability under this Section is less than the threshold, then a credit equal to twenty-five percent (25%) of the monthly recurring rate(s) for the affected Qualifying Service applies. Only one (1) such credit is allowed in a single month's billing period.

(C) Mean Time to Restore (MTTR)

(1) MTTR applies to an interruption of service that is within the Telephone Company's integrated optical service.

(2) Interruption of service is defined as a condition which renders a Qualifying Service unusable to the customer (i.e., data cannot be transmitted) because of a failure of a facility within the Telephone Company's integrated optical service that is used to furnish the Qualifying Service under this Guide. The Telephone Company will initiate a trouble ticket on all DS1 Qualifying Service interruptions reported by the customer. The Telephone Company will initiate a trouble ticket on all DS3 Qualifying Service interruptions reported by the customer and/or detected by the Telephone Company's network.

(3) MTTR for a calendar month shall be the average of all Time to Restore (TTR), as calculated by the Telephone Company. The TTR is the period of time the Qualifying Service is unavailable between the opening and closing of the trouble ticket, minus any stop clock time that was logged against the trouble ticket. Stop clock time includes, by way of example, the following times:

- Periods when customer testing is occurring.

- Periods when the customer is working on its own Customer Premises Equipment (CPE) and has not yet released the Qualifying Service to the Telephone Company for maintenance, testing or repair.

- Periods when the Telephone Company is awaiting customer authorization to commence work on the Qualifying Service.

© 2022 Frontier Communications Parent, Inc. All rights reserved

2. GENERAL REGULATIONS (Cont'd)

2.8 Service Level Agreements (Cont'd)

2.8.2 Enhanced Service Level Agreements (Enhanced SLAs) (Cont'd)

2.8.2.1 Integrated Optical Service Rider SLAs (Cont'd)

(C) Mean Time to Restore (MTTR) (Cont'd)

(3) (Cont'd)

- Periods when the Telephone Company is denied access to premises or facilities necessary to diagnose, repair, or test a Qualifying Service.

- Periods following repair of the Qualifying Service when the ticket is held open by the customer to ensure the trouble is resolved.

(4) MTTR is calculated by summing TTR for all measured tickets for the customer for the calendar month and dividing by the total number of tickets for that customer during that month.

(5) MTTR excludes any subsequent reports (i.e., additional customer inquiries while the trouble is pending), CPE troubles, trouble found on the customer's side of the point of demarcation, no trouble found, troubles closed due to customer action, force majeure events, and troubles repaired by the Telephone Company prior to receipt of a trouble report on that Qualifying Service.

(6) The threshold for MTTR in a calendar month is 2.5 hours for Qualifying Services.

(7) If the MTTR is greater than 2.5 hours over the calendar month for all of customer's Qualifying Services, then a credit equal to twenty-five percent (25%) of the monthly recurring rate(s) for the affected Qualifying Service applies for those Qualifying Services that were the subject of a trouble ticket during the measured calendar month whose TTR exceeded 2.5 hours. Only one (1) such credit is allowed in a single month's billing period. If the MTTR is 2.5 hours or less on all of customer's Qualifying Services, then no credit applies to any Qualifying Service, even if the TTR on a particular Qualifying Service exceeded such threshold.

Qualifying Services will not be included in threshold measurements under this Section 2.8.2.1 and will not be eligible for credits under this Section 2.8.2.1, when any of the conditions set forth in Section 2.8.4(B) following exist.

© 2022 Frontier Communications Parent, Inc. All rights reserved

2. GENERAL REGULATIONS (Cont'd)

2.8 Service Level Agreements (Cont'd)

2.8.2 Enhanced Service Level Agreements (Enhanced SLAs) (Cont'd)

2.8.2.2 (Reserved for Future Use)

© 2022 Frontier Communications Parent, Inc. All rights reserved

2. GENERAL REGULATIONS (Cont'd)

2.8 Service Level Agreements (Cont'd)

2.8.2 Enhanced Service Level Agreements (Enhanced SLAs) (Cont'd)

2.8.2.3 2009 Enhanced SLA Plan for Qualifying Services

For certain DS1 and DS3 Special Access Services, the 2009 Enhanced SLA Plan for Qualifying Services (2009 Enhanced SLA Plan) is available, at the option of the customer, in lieu of National SLAs and Basic SLAs. The 2009 Enhanced SLA Plan specifies performance criteria against which actual performance for Qualifying Services will be compared. The 2009 Enhanced SLA Plan provides a customer with credit in the event the Telephone Company does not meet the defined performance criteria.

(A) General

(1) The 2009 Enhanced SLA Plan is available at the customer's option. The customer must subscribe to the 2009 Enhanced SLA Plan in accordance with (B) following.

(2) During the period that a customer participates in the 2009 Enhanced SLA Plan, for the states for which the customer participates in the 2009 Enhanced SLA Plan, the customer will not be eligible to receive credits for Qualifying Services (as defined in (A)(4) following) under Section 2.8.1 preceding, Basic Service Level Agreements (Basic SLAs). During the period that a customer participates in the 2009 Enhanced SLA Plan, the customer will not be eligible to receive credits for Qualifying Services (as defined in (A)(4) following) under Section 2.8.3 following, National Service Level Agreements (National SLAs).

(3) The 2009 Enhanced SLA Plan includes the following:

(a) On Time Provisioning, as set forth in (C) following, and

(b) Availability, as set forth in following.

Provisions expire December 31, 2009, unless sooner cancelled, changed, or extended.

© 2022 Frontier Communications Parent, Inc. All rights reserved

2. GENERAL REGULATIONS (Cont'd)

2.8 Service Level Agreements (Cont'd)

2.8.2 Enhanced Service Level Agreements (Enhanced SLAs) (Cont'd)

2.8.2.3 2009 Enhanced SLA Plan for Qualifying Services (Cont'd)

(A) General (Cont'd)

(4) The 2009 Enhanced SLA Plan applies to the following services ("Qualifying Services"):

(a) DS1

- High Capacity Digital DS1 Service, as set forth in Section 5.3.6(A) following.

(b) DS3

- High Capacity Digital DS3 Service, as set forth in Section 5.3.6(E) following.
- DS3 High Capacity Service, as set forth in Section 5.6.11 following.

(5) A Qualifying Service will be included in the 2009 Enhanced SLA Plan only if it includes one or more of the following rate elements:

- Special Access Line (as described in Section 5.1.1(C) following), or
- Special Transport (as described in Section 5.1.1(B) following).

Credits under the 2009 Enhanced SLA Plan shall apply only to Qualifying Services included in the 2009 Enhanced SLA Plan.

Provisions expire December 31, 2009, unless sooner cancelled, changed, or extended.

© 2022 Frontier Communications Parent, Inc. All rights reserved

2. GENERAL REGULATIONS (Cont'd)

2.8 Service Level Agreements (Cont'd)

2.8.2 Enhanced Service Level Agreements (Enhanced SLAs) (Cont'd)

2.8.2.3 2009 Enhanced SLA Plan for Qualifying Services (Cont'd)

(A) General (Cont'd)

(6) For any calendar month, the combined total of all credits applied to an individual Qualifying Service pursuant to this Guide may not exceed the total nonrecurring installation charges billed to the customer for that individual Qualifying Service for that calendar month plus one month of the monthly recurring charges billed to the customer for that individual Qualifying Service.

Provisions expire December 31, 2009, unless sooner cancelled, changed, or extended.

© 2022 Frontier Communications Parent, Inc. All rights reserved

2. GENERAL REGULATIONS (Cont'd)

2.8 Service Level Agreements (Cont'd)

2.8.2 Enhanced Service Level Agreements (Enhanced SLAs) (Cont'd)

2.8.2.3 2009 Enhanced SLA Plan for Qualifying Services (Cont'd)

(B) Subscription and Term of the 2009 Enhanced SLA

(1) To participate in the 2009 Enhanced SLA Plan, the customer must submit a subscription, in writing, to the Telephone Company. The subscription shall include information needed by the Telephone Company to identify the customer and the Qualifying Services (including, for example, an Access Customer Name Abbreviation (ACNA) for the customer or a list of all Billing Account Numbers (BANs) and circuit IDs for Qualifying Services).

(2) The customer must designate the region for which it is subscribing, which must include two (2) or more states. The customer may subscribe to the 2009 Enhanced SLA Plan for all of the states covered by this Guide or for only some of the states covered by this Guide. However, the customer must either subscribe to the 2009 Enhanced SLA Plan set forth in this Guide for at least two states in which the customer has Qualifying Services, or subscribe to the 2009 Enhanced SLA Plan set forth in this Guide for one state in which the customer has Qualifying Services and to the 2009 Enhanced SLA Plan for Qualifying Services set forth in The Frontier Telephone Companies Tariff F.C.C. No. 4, Section 2.7.2.3, or Tariff F.C.C. No. 6 Section 2.7.2.3, for at least one other state in which the customer has Qualifying Services.

The customer must designate on its subscription the states for which the customer is subscribing to the 2009 Enhanced SLA Plan. All of the customer's ACNAs within the designated states must be included in the 2009 Enhanced SLA Plan. If after a customer has subscribed to the 2009 Enhanced SLA Plan for a state the customer acquires an additional ACNA(s) for that state, the customer must submit a subscription adding such ACNA(s) to the 2009 Enhanced SLA Plan. If the customer does not have an ACNA, all of its BANs within the designated states must be included in the 2009 Enhanced SLA Plan. If after a customer who does not have an ACNA has subscribed to the 2009 Enhanced SLA Plan for a state, the customer acquires an additional BAN(s) for that state, the customer must submit a subscription adding such BAN(s) to the 2009 Enhanced SLA Plan. Subject to acceptance of the subscription for the additional ACNA(s) or BAN(s) by the Telephone Company, the subscription for the additional ACNA(s) or BAN(s) shall become effective within the same time frame as the time frame for a new subscription to the 2009 Enhanced SLA Plan to become effective as provided in (B)(4) following.

© 2022 Frontier Communications Parent, Inc. All rights reserved

2. GENERAL REGULATIONS (Cont'd)

2.8 Service Level Agreements (Cont'd)

2.8.2 Enhanced Service Level Agreements (Enhanced SLAs) (Cont'd)

2.8.2.3 2009 Enhanced SLA Plan for Qualifying Services (Cont'd)

(B) Subscription and Term of the 2009 Enhanced SLA (Cont'd)

(3) As a condition for participation in the 2009 Enhanced SLA Plan, there must be a combined total of at least thirty-five (35) measured transactions (combined total orders and trouble reports) for the customer per calendar month measured under (C) and following and The Frontier Telephone Companies Tariff F.C.C. No. 4, Section 2.7.2.3(C) and , and Tariff F.C.C. No.6, Sections 2.7.2.3(C) and . In addition, at least 50% of the combined total number of transactions (combined total orders and trouble reports) for the customer measured under (C) and following and The Frontier Telephone Companies Tariff F.C.C. No. 4, Section 2.7.2.3(C) and , and Tariff F.C.C. No. 6, Sections 2.7.2.3(C) and , must be electronic transactions. Failure to maintain either of these minimum requirements for three (3) consecutive months, except when the failure is due to the unavailability of Telephone Company systems for electronic submission of ordering and repair transactions, will result in termination of the customer's subscription to the 2009 Enhanced SLA Plan. The Telephone Company will provide the customer written notice of such termination. Such termination shall be effective at 11:59 p.m. on the last day of the calendar month following the calendar month in which the Telephone Company provided the customer notice of termination. Following such termination, the customer may not resubscribe to the 2009 Enhanced SLA Plan.

(4) The 2009 Enhanced SLA Plan will become effective for a qualifying customer on a date agreed to by the customer and the Telephone Company that is within 60 days following receipt and acceptance by the Telephone Company of the customer's written subscription request (provided that the 2009 Enhanced SLA Plan shall not become effective for a customer prior to January 1, 2009). All subscriptions will become effective on the first day of a calendar month. A subscription will apply to the calendar month in which it becomes effective and to each calendar month thereafter through December 2009, unless cancelled sooner in accordance with this Guide. The 2009 Enhanced SLA Plan will end on December 31, 2009, unless cancelled sooner by the Telephone Company. The Telephone Company will not perform any measurements under the 2009 Enhanced SLA Plan for months after December 2009. The customer will not receive any credits under the 2009 Enhanced SLA Plan for months after December 2009.

Provisions expire December 31, 2009, unless sooner cancelled, changed, or extended.

© 2022 Frontier Communications Parent, Inc. All rights reserved

2. GENERAL REGULATIONS (Cont'd)

2.8 Service Level Agreements (Cont'd)

2.8.2 Enhanced Service Level Agreements (Enhanced SLAs) (Cont'd)

2.8.2.3 2009 Enhanced SLA Plan for Qualifying Services (Cont'd)

(B) Subscription and Term of the 2009 Enhanced SLA (Cont'd)

(5) A customer who has initially subscribed to the 2009 Enhanced SLA Plan for less than all of the states covered by this Guide may add one or more additional states to the 2009 Enhanced SLA Plan by submitting a subscription for these additional states. Subject to acceptance of the subscription by the Telephone Company, the subscription for an additional state shall become effective within the same time frame as the time frame for a new subscription to the 2009 National SLA Plan to become effective as provided in (B)(4) preceding. Subject to the requirement for participation of at least two states in the 2009 Enhanced SLA Plan as provided in (B)(2) preceding, a customer who has subscribed to the 2009 Enhanced SLA Plan may remove one or more states from the 2009 Enhanced SLA Plan. The removal of a state from the 2009 Enhanced SLA Plan shall become effective within the same time frame as the time frame for termination of the 2009 Enhanced SLA Plan to become effective as provided in (B)(6) following. If a customer removes a state from the 2009 Enhanced SLA Plan, the customer may not resubscribe to the 2009 Enhanced SLA Plan for that state.

(6) A customer may terminate its subscription for the 2009 Enhanced SLA Plan by providing written notice of termination to the Telephone Company. If the customer's notice of termination is received by the Telephone Company on or before the 20th day of a calendar month, the termination shall be effective at 11:59 p.m. on the last day of the calendar month in which such notice of termination is received by the Telephone Company. For instance, if the Telephone Company receives the notice of termination on October 19th, the termination will be effective at 11:59 p.m. on October 31st. If the customer's notice of termination is received by the Telephone Company after the 20th day of a calendar month, the termination will be effective at 11:59 p.m. on the last day of the calendar month following the calendar month in which the Telephone Company receives the notice of termination. For instance, if the Telephone Company receives the notice of termination on October 27th, the termination will be effective at 11:59 p.m. on November 30th.

Provisions expire December 31, 2009, unless sooner cancelled, changed, or extended.

© 2022 Frontier Communications Parent, Inc. All rights reserved

2. GENERAL REGULATIONS (Cont'd)

2.8 Service Level Agreements (Cont'd)

2.8.2 Enhanced Service Level Agreements (Enhanced SLAs) (Cont'd)

2.8.2.3 2009 Enhanced SLA Plan for Qualifying Services (Cont'd)

(C) On Time Provisioning

(1) On Time Provisioning is defined as the Telephone Company providing service to the customer no later than the confirmed Service Date (Due Date) (as defined in Section 2.6 preceding) provided by the Telephone Company to the customer. The Due Date is provided to the customer after the order has been verified for order accuracy, availability of required facilities and components, and completion of ordering and design related forms and documents (including, by way of example, network design, configuration, and data gathering form(s) and ASRs).

(2) Subject to Section 2.8.4(A) following, failure to meet the Due Date for installation of an individual Qualifying Service due to Telephone Company reasons will result in a one-time credit equal to the sum of one hundred percent (100%) of the applicable nonrecurring installation charge(s) (described in Section 5.6.1(F) following) billed to the customer for that individual Qualifying Service plus ten percent (10%) of one month of the monthly recurring charge(s)* billed to the customer for that individual Qualifying Service.

* The monthly recurring charge(s) (MRC(s)) for the individual Qualifying Service will consist of all applicable monthly recurring rate elements charged to that individual Qualifying Service.

Provisions expire December 31, 2009, unless sooner cancelled, changed, or extended.

© 2022 Frontier Communications Parent, Inc. All rights reserved

2. GENERAL REGULATIONS (Cont'd)

2.8 Service Level Agreements (Cont'd)

2.8.2 Enhanced Service Level Agreements (Enhanced SLAs) (Cont'd)

2.8.2.3 2009 Enhanced SLA Plan for Qualifying Services (Cont'd)

(C) On Time Provisioning (Cont'd)

(3) Only one credit under this Section 2.8.2.3(C) will be applied to an individual Qualifying Service, regardless of the number of missed Due Dates on that individual Qualifying Service. For any calendar month, the combined total of all credits applied pursuant to this Guide to an individual Qualifying Service that was not installed by the Due Date may not exceed the total nonrecurring installation charges billed to the customer for that individual Qualifying Service for that calendar month plus one month of the monthly recurring charges billed to the customer for that individual Qualifying Service. The monthly recurring charges for the individual Qualifying Service will consist of all applicable monthly recurring rate elements charged to that individual Qualifying Service. This limitation shall apply even if the customer is eligible for credits under two or more sections of this Guide (for example, under both (C) and).

(4) Qualifying Services will not be eligible for credits under this Section 2.8.2.3(C), when any of the conditions set forth in Section 2.8.4(A) following exist.

Availability

(1) Availability refers to the percentage of time that an individual Qualifying Service is available for customer use during a calendar month. The Telephone Company threshold for Availability is 99.90% in a calendar month. The Telephone Company will not round up the calculation to reach the 99.90% threshold.

Provisions expire December 31, 2009, unless sooner cancelled, changed, or extended.

© 2022 Frontier Communications Parent, Inc. All rights reserved

2. GENERAL REGULATIONS (Cont'd)

2.8 Service Level Agreements (Cont'd)

2.8.2 Enhanced Service Level Agreements (Enhanced SLAs) (Cont'd)

2.8.2.3 2009 Enhanced SLA Plan for Qualifying Services (Cont'd)

Availability (Cont'd)

(2) Availability as calculated for an individual Qualifying Service = [[(1440 minutes x number of calendar days in the calendar month) - (number of minutes out of service during the calendar month)]/(1440 minutes x number of calendar days in the calendar month)] x 100.

For example, if an individual Qualifying Service was out of service over the course of a thirty (30) calendar day month for 120 minutes, Availability would be calculated as follows:

[[(1440 minutes x 30 days) – 120 minutes out of service)]/(1440 minutes x 30 days)] x 100 = Percent Availability

[(43,200-120)/43,200] x 100 = Percent Availability

(43,080/43,200) x 100 = Percent Availability

0.99722 x 100 = 99.72% Availability

(3) A Qualifying Service is out of service (interrupted) when it becomes unusable to the customer because of a failure of a facility component within the Telephone Company's network that is used to furnish service under this Guide.

Provisions expire December 31, 2009, unless sooner cancelled, changed, or extended.

© 2022 Frontier Communications Parent, Inc. All rights reserved

2. GENERAL REGULATIONS (Cont'd)

2.8 Service Level Agreements (Cont'd)

2.8.2 Enhanced Service Level Agreements (Enhanced SLAs) (Cont'd)

2.8.2.3 2009 Enhanced SLA Plan for Qualifying Services (Cont'd)

Availability (Cont'd)

(4) Availability for a calendar month is based on the cumulative total of all service interruptions on the individual Qualifying Service as calculated by the Telephone Company. In calculating Availability, the number of minutes out of service is equal to and computed in the same fashion as the Telephone Company computes the number of minutes for time to repair (TTR) as described in this Section 2.8.2.3(4) following. TTR applies to a customer-reported service interruption on a Qualifying Service that is within the Telephone Company's network (outside plant or central office). When the customer reports trouble to the Telephone Company, a trouble ticket is opened. TTR is the restored date and time (the trouble ticket closed time) minus the reported date and time (the trouble ticket start time) minus any stop clock time associated with hold, no access, or suspend that was logged against the trouble ticket. Stop clock time includes, by way of example, the following times:

(a) Periods when customer testing is occurring.

(b) Periods when the customer is working on its own Customer Premises Equipment (CPE) and has not yet released the Qualifying Service to the Telephone Company for maintenance, testing or repair.

(c) Periods when the Telephone Company is awaiting customer authorization to commence work on the Qualifying Service.

(d) Periods when the Telephone Company is denied access to premises or facilities necessary to diagnose, repair, or test a Qualifying Service.

(e) Periods following repair of a Qualifying Service when the ticket is held open by the customer to ensure the trouble is resolved.

(5) Measurements of Availability exclude any subsequent reports (i.e., additional customer inquiries while the trouble is pending), CPE troubles, trouble found on the customer's side of the point of demarcation, troubles closed due to customer action, and troubles repaired by the Telephone Company prior to receipt of a trouble report on that Qualifying Service.

Provisions expire December 31, 2009, unless sooner cancelled, changed, or extended.

© 2022 Frontier Communications Parent, Inc. All rights reserved

2. GENERAL REGULATIONS (Cont'd)

2.8 Service Level Agreements (Cont'd)

2.8.2 Enhanced Service Level Agreements (Enhanced SLAs) (Cont'd)

2.8.2.3 2009 Enhanced SLA Plan for Qualifying Services (Cont'd)

Availability (Cont'd)

(6) Subject to Section 2.8.4(B) following, if Availability for a measured calendar month is less than 99.90% for an eligible individual Qualifying Service, a one-time credit equal to a percentage of one month of the monthly recurring charge(s) (MRCs)* billed to the customer for that individual Qualifying Service will apply to the individual Qualifying Service that did not meet the threshold as set forth in the following table.

(b) **Availability Percentage**	(c) **Credit Allowance**
(d) Equal to or greater than 99.90%	(e) None
(f) 99.57% to 99.89%	(g) 10% MRC
(h) 99.25% to 99.56%	(i) 20% MRC
(j) 98.90% to 99.24%	(k) 30% MRC
(l) Less than 98.90%	(m) 40% MRC

(7) Only one credit under this Section 2.8.2.3 will be applied in a calendar month to an individual Qualifying Service. For any calendar month, the combined total of all credits applied pursuant to this Guide to an individual Qualifying Service whose Availability was less than the 99.90% threshold may not exceed the total nonrecurring installation charges billed to the customer for that individual Qualifying Service for that calendar month plus one month of the monthly recurring charges billed to the customer for that individual Qualifying Service. The monthly recurring charges for the individual Qualifying Service will consist of all applicable monthly recurring rate elements charged to that individual Qualifying Service. This limitation shall apply even if the customer is eligible for credits under two or more sections of this Guide (for example, under both (C) and).

(8) Qualifying Services will not be included in threshold measurements under this Section 2.8.2.3 and will not be eligible for credits under this Section 2.8.2.3, when any of the conditions set forth in Section 2.8.4(B) following exist.

* The monthly recurring charge(s) (MRC(s)) for the individual Qualifying Service will consist of all applicable monthly recurring rate elements charged to that individual Qualifying Service.

Provisions expire December 31, 2009, unless sooner cancelled, changed, or extended.

© 2022 Frontier Communications Parent, Inc. All rights reserved

2. GENERAL REGULATIONS (Cont'd)

2.8 Service Level Agreements (Cont'd)

2.8.2 Enhanced Service Level Agreements (Enhanced SLAs) (Cont'd)

2.8.2.4 2010 Enhanced SLA Plan for Qualifying Services

For certain DS1 and DS3 Special Access Services, the 2010 Enhanced SLA Plan for Qualifying Services (2010 Enhanced SLA Plan) is available, at the option of the customer, in lieu of National SLAs and Basic SLAs. The 2010 Enhanced SLA Plan specifies performance criteria against which actual performance for Qualifying Services will be compared. The 2010 Enhanced SLA Plan provides a customer with credit in the event the Telephone Company does not meet the defined performance criteria.

(A) General

(1) The 2010 Enhanced SLA Plan is available at the customer's option. The customer must subscribe to the 2010 Enhanced SLA Plan in accordance with (B) following.

(2) During the period that a customer participates in the 2010 Enhanced SLA Plan, for the states for which the customer participates in the 2010 Enhanced SLA Plan, the customer will not be eligible to receive credits for Qualifying Services (as defined in (A)(4) following) under Section 2.8.1 preceding, Basic Service Level Agreements (Basic SLAs). During the period that a customer participates in the 2010 Enhanced SLA Plan, the customer will not be eligible to receive credits for Qualifying Services (as defined in (A)(4) following) under Section 2.8.3 following, National Service Level Agreements (National SLAs).

(3) The 2010 Enhanced SLA Plan includes the following:

(a) On Time Provisioning, as set forth in (C) following, and

(b) Availability, as set forth in following.

Provisions expire December 31, 2010, unless sooner cancelled, changed, or extended.

© 2022 Frontier Communications Parent, Inc. All rights reserved

2. GENERAL REGULATIONS (Cont'd)

2.8 Service Level Agreements (Cont'd)

2.8.2 Enhanced Service Level Agreements (Enhanced SLAs) (Cont'd)

2.8.2.4 2010 Enhanced SLA Plan for Qualifying Services (Cont'd)

(A) General (Cont'd)

(4) The 2010 Enhanced SLA Plan applies to the following services ("Qualifying Services"):

(a) DS1

- High Capacity Digital DS1 Service, as set forth in Section 5.3.6(A) following.

(b) DS3

- High Capacity Digital DS3 Service, as set forth in Section 5.3.6(E) following.
- DS3 High Capacity Service, as set forth in Section 5.6.11 following.

(5) A Qualifying Service will be included in the 2010 Enhanced SLA Plan only if it includes one or more of the following rate elements:

- Special Access Line (as described in Section 5.1.1(C) following), or
- Special Transport (as described in Section 5.1.1(B) following).

Credits under the 2010 Enhanced SLA Plan shall apply only to Qualifying Services included in the 2010 Enhanced SLA Plan.

Provisions expire December 31, 2010, unless sooner cancelled, changed, or extended.

© 2022 Frontier Communications Parent, Inc. All rights reserved

2. GENERAL REGULATIONS (Cont'd)

2.8 Service Level Agreements (Cont'd)

2.8.2 Enhanced Service Level Agreements (Enhanced SLAs) (Cont'd)

2.8.2.4 2010 Enhanced SLA Plan for Qualifying Services (Cont'd)

(A) General (Cont'd)

(6) For any calendar month, the combined total of all credits applied to an individual Qualifying Service pursuant to this Guide may not exceed the total nonrecurring installation charges billed to the customer for that individual Qualifying Service for that calendar month plus one month of the monthly recurring charges billed to the customer for that individual Qualifying Service.

Provisions expire December 31, 2010, unless sooner cancelled, changed, or extended.

© 2022 Frontier Communications Parent, Inc. All rights reserved

2. GENERAL REGULATIONS (Cont'd)

2.8 Service Level Agreements (Cont'd)

2.8.2 Enhanced Service Level Agreements (Enhanced SLAs) (Cont'd)

2.8.2.4 2010 Enhanced SLA Plan for Qualifying Services (Cont'd)

(B) Subscription and Term of the 2010 Enhanced SLA

(1) To participate in the 2010 Enhanced SLA Plan, the customer must submit a subscription, in writing, to the Telephone Company. The subscription shall include information needed by the Telephone Company to identify the customer and the Qualifying Services (including, for example, an Access Customer Name Abbreviation (ACNA) for the customer or a list of all Billing Account Numbers (BANs) and circuit IDs for Qualifying Services).

(2) The customer must designate the region for which it is subscribing, which must include two (2) or more states. The customer may subscribe to the 2010 Enhanced SLA Plan for all of the states covered by this Guide or for only some of the states covered by this Guide. However, the customer must either subscribe to the 2010 Enhanced SLA Plan set forth in this Guide for at least two states in which the customer has Qualifying Services, or subscribe to the 2010 Enhanced SLA Plan set forth in this Guide for one state in which the customer has Qualifying Services and to the 2010 Enhanced SLA Plan for Qualifying Services set forth in The Frontier Telephone Companies Tariff F.C.C. No. 4, Section 2.7.2.4, or Tariff F.C.C. No. 6, Section 2.7.2.4, for at least one other state in which the customer has Qualifying Services.

The customer must designate on its subscription the states for which the customer is subscribing to the 2010 Enhanced SLA Plan. All of the customer's ACNAs within the designated states must be included in the 2010 Enhanced SLA Plan. If after a customer has subscribed to the 2010 Enhanced SLA Plan for a state the customer acquires an additional ACNA(s) for that state, the customer must submit a subscription adding such ACNA(s) to the 2010 Enhanced SLA Plan. If the customer does not have an ACNA, all of its BANs within the designated states must be included in the 2010 Enhanced SLA Plan. If after a customer who does not have an ACNA has subscribed to the 2010 Enhanced SLA Plan for a state, the customer acquires an additional BAN(s) for that state, the customer must submit a subscription adding such BAN(s) to the 2010 Enhanced SLA Plan. Subject to acceptance of the subscription for the additional ACNA(s) or BAN(s) by the Telephone Company, the subscription for the additional ACNA(s) or BAN(s) shall become effective within the same time frame as the time frame for a new subscription to the 2010 Enhanced SLA Plan to become effective as provided in (B)(4) following.

Provisions expire December 31, 2010, unless sooner cancelled, changed, or extended.

© 2022 Frontier Communications Parent, Inc. All rights reserved

2. GENERAL REGULATIONS (Cont'd)

2.8 Service Level Agreements (Cont'd)

2.8.2 Enhanced Service Level Agreements (Enhanced SLAs) (Cont'd)

2.8.2.4 2010 Enhanced SLA Plan for Qualifying Services (Cont'd)

(B) Subscription and Term of the 2010 Enhanced SLA (Cont'd)

(3) As a condition for participation in the 2010 Enhanced SLA Plan, there must be a combined total of at least thirty-five (35) measured transactions (combined total orders and trouble reports) for the customer per calendar month measured under (C) and following and The Frontier Telephone Companies Tariff F.C.C. No.4, Section 2.7.2.4(C) and , and Tariff F.C.C. No. 6, Sections 2.7.2.4(C) and . In addition, at least 50% of the combined total number of transactions (combined total orders and trouble reports) for the customer measured under (C) and following and The Frontier Telephone Companies Tariff F.C.C. No. 4, Section 2.7.2.4(C) and , and Tariff F.C.C. No. 6, Sections 2.7.2.4(C) and , must be electronic transactions. Failure to maintain either of these minimum requirements for three (3) consecutive months, except when the failure is due to the unavailability of Telephone Company systems for electronic submission of ordering and repair transactions, will result in termination of the customer's subscription to the 2010 Enhanced SLA Plan. The Telephone Company will provide the customer written notice of such termination. Such termination shall be effective at 11:59 p.m. on the last day of the calendar month following the calendar month in which the Telephone Company provided the customer notice of termination. Following such termination, the customer may not resubscribe to the 2010 Enhanced SLA Plan.

(4) The 2010 Enhanced SLA Plan will become effective for a qualifying customer on a date agreed to by the customer and the Telephone Company that is within 60 days following receipt and acceptance by the Telephone Company of the customer's written subscription request (provided that the 2010 Enhanced SLA Plan shall not become effective for a customer prior to January 1, 2010). All subscriptions will become effective on the first day of a calendar month. A subscription will apply to the calendar month in which it becomes effective and to each calendar month thereafter through December 2010, unless cancelled sooner in accordance with this Guide. The 2010 Enhanced SLA Plan will end on December 31, 2010, unless cancelled sooner by the Telephone Company. The Telephone Company will not perform any measurements under the 2010 Enhanced SLA Plan for months after December 2010. The customer will not receive any credits under the 2010 Enhanced SLA Plan for months after December 2010.

Provisions expire December 31, 2010, unless sooner cancelled, changed, or extended.

© 2022 Frontier Communications Parent, Inc. All rights reserved

2. GENERAL REGULATIONS (Cont'd)

2.8 Service Level Agreements (Cont'd)

2.8.2 Enhanced Service Level Agreements (Enhanced SLAs) (Cont'd)

2.8.2.4 2010 Enhanced SLA Plan for Qualifying Services (Cont'd)

(B) Subscription and Term of the 2010 Enhanced SLA (Cont'd)

(5) A customer who has initially subscribed to the 2010 Enhanced SLA Plan for less than all of the states covered by this Guide may add one or more additional states to the 2010 Enhanced SLA Plan by submitting a subscription for these additional states. Subject to acceptance of the subscription by the Telephone Company, the subscription for an additional state shall become effective within the same time frame as the time frame for a new subscription to the 2010 National SLA Plan to become effective as provided in (B)(4) preceding. Subject to the requirement for participation of at least two states in the 2010 Enhanced SLA Plan as provided in (B)(2) preceding, a customer who has subscribed to the 2010 Enhanced SLA Plan may remove one or more states from the 2010 Enhanced SLA Plan. The removal of a state from the 2010 Enhanced SLA Plan shall become effective within the same time frame as the time frame for termination of the 2010 Enhanced SLA Plan to become effective as provided in (B)(6) following. If a customer removes a state from the 2010 Enhanced SLA Plan, the customer may not resubscribe to the 2010 Enhanced SLA Plan for that state.

(6) A customer may terminate its subscription for the 2010 Enhanced SLA Plan by providing written notice of termination to the Telephone Company. If the customer's notice of termination is received by the Telephone Company on or before the 20th day of a calendar month, the termination shall be effective at 11:59 p.m. on the last day of the calendar month in which such notice of termination is received by the Telephone Company. For instance, if the Telephone Company receives the notice of termination on October 19th, the termination will be effective at 11:59 p.m. on October 31st. If the customer's notice of termination is received by the Telephone Company after the 20th day of a calendar month, the termination will be effective at 11:59 p.m. on the last day of the calendar month following the calendar month in which the Telephone Company receives the notice of termination. For instance, if the Telephone Company receives the notice of termination on October 27th, the termination will be effective at 11:59 p.m. on November 30th.

Provisions expire December 31, 2010, unless sooner cancelled, changed, or extended.

© 2022 Frontier Communications Parent, Inc. All rights reserved

2. GENERAL REGULATIONS (Cont'd)

2.8 Service Level Agreements (Cont'd)

2.8.2 Enhanced Service Level Agreements (Enhanced SLAs) (Cont'd)

2.8.2.4 2010 Enhanced SLA Plan for Qualifying Services (Cont'd)

(C) On Time Provisioning

(1) On Time Provisioning is defined as the Telephone Company providing service to the customer no later than the confirmed Service Date (Due Date) (as defined in Section 2.6 preceding) provided by the Telephone Company to the customer. The Due Date is provided to the customer after the order has been verified for order accuracy, availability of required facilities and components, and completion of ordering and design related forms and documents (including, by way of example, network design, configuration, and data gathering form(s) and ASRs).

(2) Subject to Section 2.8.4(A) following, failure to meet the Due Date for installation of an individual Qualifying Service due to Telephone Company reasons will result in a one-time credit equal to the sum of one hundred percent (100%) of the applicable nonrecurring installation charge(s) (described in Section 5.6.1(F) following) billed to the customer for that individual Qualifying Service plus ten percent (10%) of one month of the monthly recurring charge(s)* billed to the customer for that individual Qualifying Service.

* The monthly recurring charge(s) (MRC(s)) for the individual Qualifying Service will consist of all applicable monthly recurring rate elements charged to that individual Qualifying Service.

Provisions expire December 31, 2010, unless sooner cancelled, changed, or extended.

© 2022 Frontier Communications Parent, Inc. All rights reserved

2. GENERAL REGULATIONS (Cont'd)

2.8 Service Level Agreements (Cont'd)

2.8.2 Enhanced Service Level Agreements (Enhanced SLAs) (Cont'd)

2.8.2.4 2010 Enhanced SLA Plan for Qualifying Services (Cont'd)

(C) On Time Provisioning (Cont'd)

(3) Only one credit under this Section 2.8.2.4(C) will be applied to an individual Qualifying Service, regardless of the number of missed Due Dates on that individual Qualifying Service. For any calendar month, the combined total of all credits applied pursuant to this Guide to an individual Qualifying Service that was not installed by the Due Date may not exceed the total nonrecurring installation charges billed to the customer for that individual Qualifying Service for that calendar month plus one month of the monthly recurring charges billed to the customer for that individual Qualifying Service. The monthly recurring charges for the individual Qualifying Service will consist of all applicable monthly recurring rate elements charged to that individual Qualifying Service. This limitation shall apply even if the customer is eligible for credits under two or more sections of this Guide (for example, under both (C) and).

(4) Qualifying Services will not be eligible for credits under this Section 2.8.2.4(C), when any of the conditions set forth in Section 2.8.4(A) following exist.

Availability

(1) Availability refers to the percentage of time that an individual Qualifying Service is available for customer use during a calendar month. The Telephone Company threshold for Availability is 99.90% in a calendar month. The Telephone Company will not round up the calculation to reach the 99.90% threshold.

Provisions expire December 31, 2010, unless sooner cancelled, changed, or extended.

© 2022 Frontier Communications Parent, Inc. All rights reserved

2. GENERAL REGULATIONS (Cont'd)

2.8 Service Level Agreements (Cont'd)

2.8.2 Enhanced Service Level Agreements (Enhanced SLAs) (Cont'd)

2.8.2.4 2010 Enhanced SLA Plan for Qualifying Services (Cont'd)

Availability (Cont'd)

(2) Availability as calculated for an individual Qualifying Service = [[(1440 minutes x number of calendar days in the calendar month) - (number of minutes out of service during the calendar month)]/(1440 minutes x number of calendar days in the calendar month)] x 100.

For example, if an individual Qualifying Service was out of service over the course of a thirty (30) calendar day month for 120 minutes, Availability would be calculated as follows:

[[(1440 minutes x 30 days) – 120 minutes out of service)]/(1440 minutes x 30 days)] x 100 = Percent Availability

[(43,200-120)/43,200] x 100 = Percent Availability

(43,080/43,200) x 100 = Percent Availability

0.99722 x 100 = 99.72% Availability

(3) A Qualifying Service is out of service (interrupted) when it becomes unusable to the customer because of a failure of a facility component within the Telephone Company's network that is used to furnish service under this Guide.

Provisions expire December 31, 2010, unless sooner cancelled, changed, or extended.

© 2022 Frontier Communications Parent, Inc. All rights reserved

2. GENERAL REGULATIONS (Cont'd)

2.8 Service Level Agreements (Cont'd)

2.8.2 Enhanced Service Level Agreements (Enhanced SLAs) (Cont'd)

2.8.2.4 2010 Enhanced SLA Plan for Qualifying Services (Cont'd)

Availability (Cont'd)

(4) Availability for a calendar month is based on the cumulative total of all service interruptions on the individual Qualifying Service as calculated by the Telephone Company. In calculating Availability, the number of minutes out of service is equal to and computed in the same fashion as the Telephone Company computes the number of minutes for time to repair (TTR) as described in this Section 2.8.2.4(4) following. TTR applies to a customer-reported service interruption on a Qualifying Service that is within the Telephone Company's network (outside plant or central office). When the customer reports trouble to the Telephone Company, a trouble ticket is opened. TTR is the restored date and time (the trouble ticket closed time) minus the reported date and time (the trouble ticket start time) minus any stop clock time associated with hold, no access, or suspend that was logged against the trouble ticket. Stop clock time includes, by way of example, the following times:

(a) Periods when customer testing is occurring.

(b) Periods when the customer is working on its own Customer Premises Equipment (CPE) and has not yet released the Qualifying Service to the Telephone Company for maintenance, testing or repair.

(c) Periods when the Telephone Company is awaiting customer authorization to commence work on the Qualifying Service.

(d) Periods when the Telephone Company is denied access to premises or facilities necessary to diagnose, repair, or test a Qualifying Service.

(e) Periods following repair of a Qualifying Service when the ticket is held open by the customer to ensure the trouble is resolved.

(5) Measurements of Availability exclude any subsequent reports (i.e., additional customer inquiries while the trouble is pending), CPE troubles, trouble found on the customer's side of the point of demarcation, troubles closed due to customer action, and troubles repaired by the Telephone Company prior to receipt of a trouble report on that Qualifying Service.

Provisions expire December 31, 2010, unless sooner cancelled, changed, or extended.

© 2022 Frontier Communications Parent, Inc. All rights reserved

2. GENERAL REGULATIONS (Cont'd)

2.8 Service Level Agreements (Cont'd)

2.8.2 Enhanced Service Level Agreements (Enhanced SLAs) (Cont'd)

2.8.2.4 2010 Enhanced SLA Plan for Qualifying Services (Cont'd)

Availability (Cont'd)

(6) Subject to Section 2.8.4(B) following, if Availability for a measured calendar month is less than 99.90% for an eligible individual Qualifying Service, a one-time credit equal to a percentage of one month of the monthly recurring charge(s) (MRCs)* billed to the customer for that individual Qualifying Service will apply to the individual Qualifying Service that did not meet the threshold as set forth in the following table.

Availability Percentage	**Credit Allowance**
Equal to or greater than 99.90%	None
99.57% to 99.89%	10% MRC
99.25% to 99.56%	20% MRC
98.90% to 99.24%	30% MRC
Less than 98.90%	40% MRC

(7) Only one credit under this Section 2.8.2.4 will be applied in a calendar month to an individual Qualifying Service. For any calendar month, the combined total of all credits applied pursuant to this Guide to an individual Qualifying Service whose Availability was less than the 99.90% threshold may not exceed the total nonrecurring installation charges billed to the customer for that individual Qualifying Service for that calendar month plus one month of the monthly recurring charges billed to the customer for that individual Qualifying Service. The monthly recurring charges for the individual Qualifying Service will consist of all applicable monthly recurring rate elements charged to that individual Qualifying Service. This limitation shall apply even if the customer is eligible for credits under two or more sections of this Guide (for example, under both (C) and).

(8) Qualifying Services will not be included in threshold measurements under this Section 2.8.2.4 and will not be eligible for credits under this Section 2.8.2.4, when any of the conditions set forth in Section 2.8.4(B) following exist.

* The monthly recurring charge(s) (MRC(s)) for the individual Qualifying Service will consist of all applicable monthly recurring rate elements charged to that individual Qualifying Service.

Provisions expire December 31, 2010, unless sooner cancelled, changed, or extended.

© 2022 Frontier Communications Parent, Inc. All rights reserved

2. GENERAL REGULATIONS (Cont'd)

2.8 Service Level Agreements (Cont'd)

2.8.3 When a Credit Allowance Does Not Apply

(A) Reserved For Future Use (C)

© 2023 Frontier Communications Parent, Inc. All rights reserved

2. GENERAL REGULATIONS (Cont'd)

2.8. Service Level Agreements (Cont'd)

2.8.4 When a Credit Allowance Does Not Apply (Cont'd)

(A) Reserved for Future Use (C)

© 2023 Frontier Communications Parent, Inc. All rights reserved

2. GENERAL REGULATIONS (Cont'd)

2.8. Service Level Agreements (Cont'd)

2.8.4 When a Credit Allowance Does Not Apply (Cont'd)

(B) FIA Interruptions/Mean Time to Restore/Availability

This Section 2.8.4(B) applies to and supplements Section 2.8.1.1 preceding, Credit Allowance for FIA Interruptions; Section 2.8.2 preceding, Enhanced Service Level Agreements; and Section 2.8.3 preceding, National Service Level Agreements. Services will not be included in performance measurements and credits will not apply:

(1) When the customer fails to report the interruption to the Telephone Company (excluding DS3 Integrated Optical Service Riders); or

(2) When the interruption was caused by the act or omission of the customer or a party authorized by the customer to use the service; or

(3) When the interruption was due to the failure of power, equipment, service, or systems provided by the customer or persons other than the Telephone Company; or

(4) For any period in which the Telephone Company is not afforded access to the premises where the service is terminated; or

(5) When the customer has released the service to the Telephone Company for maintenance purposes, to make rearrangements, or for the implementation of an order for a change in the service, during the time that was negotiated with the customer prior to the release of that service (thereafter, a credit allowance as set forth in this Section 2.8 applies); or

(6) For any period of scheduled maintenance or scheduled downtime where the customer has received prior notification from the Telephone Company; or

(7) When interruptions occur or continue because of the failure of the customer to authorize the replacement of any element of special construction; or

© 2022 Frontier Communications Parent, Inc. All rights reserved

2. GENERAL REGULATIONS (Cont'd)

2.8. Service Level Agreements (Cont'd)

2.8.4 When a Credit Allowance Does Not Apply (Cont'd)

(B) FIA Interruptions/Mean Time to Restore/Availability (Cont'd)

(8) For periods when the customer elects not to release the service for testing and/or repair; or

(9) For periods of temporary discontinuance as set forth in Section 2.2.1 preceding; or

(10) During periods of interruption as set forth in Section 6.3 following; or

(11) When an interruption is required, permitted or excused by this Guide; or

(12) For interruptions, failures or delays due to acts of God or the public enemy, compliance with any law or any regulation or order of any governmental authority, acts of terrorism, war, rebellion, insurrection or sabotage or damage resulting therefrom, fires, floods, earthquakes, volcanic action, unusually severe weather, explosions, washouts, rules and regulations with regard to common carriers, accidents, epidemics, riots, strikes or other concerted acts of employees, whether direct or indirect, lockouts or other industrial disturbances, whether direct or indirect, worms, viruses or other contaminants that may cause damage to or disable software, computer or electronic systems, or any similar cause, or other causes beyond the Telephone Company's reasonable control (except that, this Section 2.8.4(B)(12) does not apply to Section 2.8.1.1,excluding the SASG as set forth in Section 2.8.1.1(A)(4), to which this Section 2.8.4(B)(12) shall apply); or

(13) For an interruption, or a group of interruptions resulting from a common cause, for amounts less than one dollar; or

(14) For any interruption of LAN Extension Service as described in 5.6.18 following; or

(15) For any interruption of an EIS or EIS elements as described in Section 17 following.

© 2022 Frontier Communications Parent, Inc. All rights reserved

2. GENERAL REGULATIONS (Cont'd)

2.9 Sale or Transfer of an Operating Telephone Company's Assets and/or Stock to an Unaffiliated Third Party

This Section 2.9 shall apply: (i) if the Telephone Company sells or transfers all or a portion of the assets or stock of an Operating Telephone Company (e.g., Frontier North, Inc.) to an unaffiliated third party ("**Transfer**"); and (ii) a service offering or Service Level Agreement (SLA) of this Guide as referenced in this Section 2.9 does not include terms and conditions relating to a Transfer.

2.9.1 General

The terms and conditions set forth in Section 2.9.2 following shall apply:

(A) when a customer subscribes to a service offering under this Guide that aggregates the customer's purchases from the Telephone Company to measure compliance with such service offering or the customer participates in a SLA that aggregates the customer's measured transactions, and:

(B) the service offering or SLA does not include terms and conditions pertaining to a Transfer; and

(C) as a result of the Transfer, one or more of the following conditions occur solely as a result of the Telephone Company no longer providing the same quantity of services:

(1) the customer no longer satisfies the minimum requirements of the service offering or SLA;

(2) the customer is subject to a related penalty, termination liability or cancellation;

(3) the customer is subject to a change in the tier of a volume table or a rate table; and

(4) the customer is subject to a change in the rate level of the service offering.

2.9.2 Undertaking of the Telephone Company Following a Transfer

When the conditions set forth in 2.9.1 preceding exist, the Telephone Company will utilize the following terms and conditions, as applicable.

(A) If the service offering includes specific minimum ordering requirements for participation, or requires that the customer achieve a minimum number of services, minimum number of rate elements, and/or minimum revenue within a specific geographic area in order to continue its subscription to the service offering or participation in a pricing plan for such service offering (each, a **Minimum Requirement**), the Telephone Company will apply the terms and conditions of this Section 2.9.2(A). The following service offerings have Minimum Requirements that are subject to this Section 2.9.2(A).

- Call Management Signaling Service as set forth in Section 6.19 following

- Directory Assistance Service/Preferred Directory Assistance Service as set forth in Section 8.1.1 following

© 2022 Frontier Communications Parent, Inc. All rights reserved

2. GENERAL REGULATIONS (Cont'd)

2.9 Sale or Transfer of an Operating Telephone Company's Assets and/or Stock to an Unaffiliated Third Party (Cont'd)

2.9.2 Undertaking of the Telephone Company Following a Transfer (Cont'd)

(A) (Cont'd)

- Banded Optical Transport as set forth in Sections 11.8.1(F) and 20(2)(f) following

- TCP/IP Data Aggregation Service as set forth in Section 16.5 following

In the event of a Transfer, the following applies.

(1) The Telephone Company will, consistent with the service offering, determine if the customer satisfies the Minimum Requirement for the service offering with the reduced quantity of services the Telephone Company provides to the customer following the Transfer; and

(2) if the customer does not satisfy the Minimum Requirement following the Transfer, determine if the customer would have satisfied the Minimum Requirement had the Transfer not occurred. If the customer would have satisfied the Minimum Requirement had the Transfer not occurred, then no further action shall be taken and the customer will be considered to have satisfied the Minimum Requirement. If the customer would not have satisfied the Minimum Requirement had the Transfer not occurred, then the terms and conditions for such result shall apply under the applicable service offering, except that the calculation of any penalty associated with not satisfying the Minimum Requirement shall be reduced pro-rata to reflect the Transfer. Upon renewal of the customer's commitment period for such service offering or subsequent subscription to such service offering, as applicable, the terms and conditions set forth in the applicable section(s) of this Guide shall apply, including satisfying the Minimum Requirement for such service offering using only the quantity of services the customer purchases from the Telephone Company at the time of renewal or subsequent subscription.

For example, assume Frontier North Inc. transfers a portion of its assets to an unaffiliated third party. Further assume that a customer subscribes to Call Management Signaling Service under Section 6.19 following which has a minimum monthly billing of one million (1,000,000) call signals per month. Also assume that following the Transfer, the volume of call signals recorded for the customer at the next scheduled review is nine hundred fifty thousand (950,000), and that an estimated one hundred thousand (100,000) call signals were associated with the services transferred to the unaffiliated third party. In this case, the Telephone Company would determine if the customer would have satisfied the minimum number of call signals had the Transfer not occurred by adding (i) the estimated number of call signals associated with the services transferred to the unaffiliated third party and; (ii) the recorded number of call signals for the period of review [950,000 + 100,000 = 1,050,000 call signals]. Based on this calculation, the customer would have satisfied the Minimum Requirement and will not incur any shortfall charges. However, if the result of such calculation was that the customer still did not satisfy the Minimum Requirement for the service, then the terms and conditions for such result shall apply under Section 6.19 following, except that the calculation of shortfall charges shall be reduced pro-rata to reflect the Transfer.

© 2022 Frontier Communications Parent, Inc. All rights reserved

2. GENERAL REGULATIONS (Cont'd)

2.9 Sale or Transfer of an Operating Telephone Company's Assets and/or Stock to an Unaffiliated Third Party (Cont'd)

2.9.2 Undertaking of the Telephone Company Following a Transfer (Cont'd)

(B) If the service offering requires that the customer commit a minimum number of the services or rate elements that the customer purchases from the Telephone Company and maintain such minimum during the term of the service offering (a **Commitment Level**), and the service offering does not apply rates or credits based on a volume based tier structure, the Telephone Company will apply this Section 2.9.2(B). The following service offering has a Commitment Level that is subject to this Section 2.9.2(B).

- Four-wire Voiceband and Digital Data Service Rate Stability Plan as set forth in Section 5.6.13 following

In the event of a Transfer, the following applies.

(1) The Telephone Company will recalculate the Commitment Level for the duration of the current term to reflect the removal of the services the Telephone Company no longer provides to the customer solely as a result of the Transfer; and

(2) use the reduced Commitment Level in all subsequent reviews/true-ups that measure the customer's compliance with established requirements for the service offering for the balance of the current term unless otherwise revised by: (i) the customer in accordance with the terms and conditions of the service offering; or (ii) the terms and conditions of such service offering. Upon renewal of the customer's term for such service offering, the terms and conditions set forth in the applicable section(s) of this Guide shall apply, including establishment of a new Commitment Level using only the quantity of services the customer purchases from the Telephone Company at the time of renewal.

(3) If, after reducing the Commitment Level under (2) preceding, the customer is below the minimum combined national commitment level of five hundred (500) Four-wire Voiceband and DDS SALs as required under Section 5.6.13(B) following, the Telephone Company will determine if the customer would have satisfied such minimum requirement had the Transfer not occurred and apply the same actions applied under (A)(2) preceding.

For example, assume Frontier North Inc. transfers a portion of its assets to an unaffiliated third party. Further assume that a customer with a Four-wire Voiceband and Digital Data Service Rate Stability Plan and a Commitment Level of seven hundred fifty (750) DDS SALs is short of its Commitment Level at the next scheduled annual review by one hundred twenty-five (125) DDS SALs (i.e., the customer has six hundred twenty-five (625) DDS SALs in-service at the next annual review). Also assume that one hundred (100) DDS SALs were transferred to an unaffiliated third party as a result of the Transfer. In this case, the Telephone Company will reduce the customer's Commitment Level to six hundred fifty (650) DDS SALs (750 DDS SALs – 100 DDS SALs = 650 DDS SALs) to reflect the transfer. Since the customer's reduced Commitment Level is 650 DDS SALs , the customer is still twenty-five (25) DDS SALs short of the reduced Commitment Level (650 DDS SALs – 625 DDS SALs = 25 DDS SALs short). After applying a minus two percent (2%) shortage allowance per the terms and conditions for this rate stability plan, the customer is still short of its Commitment Level and subject to penalty on the resulting shortage.

© 2022 Frontier Communications Parent, Inc. All rights reserved

2. GENERAL REGULATIONS (Cont'd)

2.9 Sale or Transfer of an Operating Telephone Company's Assets and/or Stock to an Unaffiliated Third Party (Cont'd)

2.9.2 Undertaking of the Telephone Company Following a Transfer (Cont'd)

(C) If the service offering applies rates or credits based on a volume-based tier structure, the Telephone Company will apply this Section 2.9.2(C). The following service offerings have a volume-based tier structure that is subject to this Section 2.9.2(C).

- DS1 Term Volume Plans (i.e., one, two, three and five year DS1 TVP and eight and ten year DS1 TVP (DS1 ETTVP)) as set forth in Section 5.6.14 following

- DS3 Term Volume Plans as set forth in Section 5.6.19 following

In the event of a Transfer, the following applies.

(1) The Telephone Company will calculate an adjustment to be used in each scheduled review/true-up following the Transfer for the balance of the customer's current term (**Transfer Adjustment**). The Transfer Adjustment (which will be calculated using the actual number of units transferred to the unaffiliated third party) offsets the reduced volume achieved by the customer solely as a result of the Transfer (**Transfer Adjustment Units**) by summing: (i) the actual volume units achieved by the customer during the applicable review/true-up period (**Actual Units**); and (ii) the Transfer Adjustment Units. The resulting volume of units (**Adjusted Units**) shall be used in all applicable review/true-up calculations for the balance of the customer's current term. Upon completion of the current term, the terms and conditions set forth in the applicable section(s) of this Guide shall apply using only the quantity of services the customer purchases from the Telephone Company with no further Transfer Adjustments being applied; and

(2) if, after applying the Transfer Adjustment, the customer still fails to maintain the same volume tier, the terms and conditions applicable to such result apply in accordance with the service offering, except that the calculation of any penalty associated with attaining a lesser volume tier shall be reduced pro-rata to reflect the Transfer.

For example, assume Frontier North Inc transfers a portion of its assets to an unaffiliated third party. Further assume a customer under a DS1 TVP with a committed quantity of 1,500 DS1 SALs (threshold level of 1001 – 3000 DS1 SALs) is five hundred seventy-five (575) DS1 SALs short of its committed quantity at the next annual review following a Transfer. Further assume that five-hundred (500) DS1 SALs were transferred to an unaffiliated third party in the Transfer and that the in-service quantity of DS1 SALs as measured at the next annual review is nine hundred twenty-five (925). In this case, the Telephone Company will apply a Transfer Adjustment which adds the 500 DS1 SALs lost in the Transfer (the Transfer Adjustment Units) to the 925 DS1 SALs which are in-service (the Actual Units), the result of which is 1,425 DS1 SALs (the Adjusted Units) and rates continue to be applied at the 1001-3000 DS1 SAL threshold level. However, after applying the Transfer Adjustment, the customer is still short of its committed quantity of DS1 SALs and is subject to a shortfall penalty on the shortage which is calculated using the allowance per section 5.6.14 following.

© 2022 Frontier Communications Parent, Inc. All rights reserved

2. GENERAL REGULATIONS (Cont'd)

2.9 Sale or Transfer of an Operating Telephone Company's Assets and/or Stock to an Unaffiliated Third Party (Cont'd)

2.9.2 Undertaking of the Telephone Company Following a Transfer (Cont'd)

(C) (Cont'd)

As another example, assume Frontier North Inc. transfers a portion of its assets to an unaffiliated third party. Further assume that a customer who subscribes to a DS1 ETTVP with an eight (8) year commitment period and a committed quantity of 18,000 DS1 SALs (threshold level of 10,001 – 20,000 DS1 SALs) is three thousand (3,000) DS1 SALs short of its committed quantity at the next scheduled annual review following the Transfer, and that such shortage would normally result in the application of a shortfall penalty. Finally assume that three thousand (3,000) DS1 SALs were transferred to an unaffiliated third party in the Transfer and that the in-service quantity of DS1 SALs as measured at the next annual review is fifteen thousand (15,000). In this case, the Telephone Company will apply a Transfer Adjustment which adds the 3,000 DS1 SALs lost in the Transfer (the Transfer Adjustment Units) to the 15,000 DS1 SALs which are in-service (the Actual Units), the result of which is 18,000 DS1 SALs (the Adjusted Units) and rates continue to be applied at the 10,001 to 20,000 threshold level with no shortfall penalty being assessed to the customer.

For Service Level Agreements (SLAs), a customer who participates in one of such SLAs prior to a Transfer shall continue with such SLA for the balance of the subscription term, regardless of whether or not the customer is able to satisfy the requirement(s) of the SLA using the reduced quantity of services the Telephone Company provides to the customer following a Transfer. The following SLAs are subject to this Section 2.9.2:

- 2010 Enhanced Service Level Agreement as set forth in Section 2.8.2.4 preceding

- 2010 National Service Level Agreement as set forth in Section 2.8.3.2 preceding

For example, assume Frontier North Inc. transfers a portion of its assets to an unaffiliated third party. Further assume that a customer subscribes to the 2010 Enhanced SLA Plan for Qualifying Services under Section 2.8.2.4 preceding. The 2010 Enhanced SLA Plan for Qualifying Services requires that the customer have at least thirty-five (35) measured transactions per month as a condition for participation in such SLA. Finally, assume that immediately following the Transfer, the customer has only twenty-two (22) measured transactions. In this case, the customer will be allowed to continue its subscription to the 2010 Enhanced Service Level Agreement for the remainder of the subscription term ending December 31, 2010. (C)

© 2022 Frontier Communications Parent, Inc. All rights reserved

2. General Regulations (Cont'd)

2.10 Initial Transfer of Assets from Predecessor Company

The original issuing carriers of this Guide were created by a transfer of assets from an unaffiliated third party. This Section 2.10 governs treatment of customers who, at the time of the transfer of assets from the predecessor company, subscribed to a service offering under this Guide that aggregates the customer's purchases from the Telephone Company to measure compliance with such service offering or participated in a SLC that aggregates the customer's measured transactions.

(A) When a customer subscribes to a service offering under this Guide that aggregates the customer's purchases from the Telephone Company to measure compliance with such service offering or the customer participates in a SLA that aggregates the customer's measured transactions, and the service offering or SLA includes terms and conditions pertaining to a transfer, the terms and conditions pertaining to a transfer will apply to that service offering or SLA as if the Telephone Company were the predecessor company.

(B) When customer subscribes to a service offering under this Guide that aggregates the customer's purchases from the Telephone Company to measure compliance with such service offering or the customer participates in a SLA that aggregates the customer's measured transactions, and the service offering or SLA does not include terms and conditions pertaining to a Transfer, Sections 2.9 preceding will apply as if the Telephone Company were the predecessor company.

For example, if a customer subscribed to a service offering with the predecessor company that aggregates the customer's measured transactions, and the transfer of assets resulted in the customer meeting the conditions described in 2.9.1(B) and (C) preceding with respect to the assets transferred to the Telephone Company, the provisions of 2.9.2 preceding will apply with respect to prorating any Minimum Requirements.

© 2022 Frontier Communications Parent, Inc. All rights reserved

3. ORDERING OPTIONS FOR FIA

3.1 General

This section sets forth the regulations and order related charges for FIA Orders to provide the customer with FIA. These charges are in addition to other applicable charges in other sections of this Guide.

3.1.1 Ordering Conditions

(A) A customer may order any amount of FIA (Special) of the same interface type, same Feature Group, same BSA or same Special Access between the same locations for installation on the same date on a single FIA ASR. A customer may order the shared use of Switched Access and Special Access over the same high capacity facility however, separate FIA ASRs are required. The methodology for shared use is set forth in 5.6.7.

- ASRs for FGA or BSA-A must specify the number of lines required.

- ASRs for FGB, FGC, FGD, BSA-B, BSA-C, BSA-D and SAC Access Service must specify the number of trunks required or Busy Hour Minutes of Capacity (BHMC). For Tandem-Switched Transport, the customer has the option of specifying the number of trunks or Busy Hour Minutes of Capacity (BHMC).

  In addition, the ASR must indicate whether the Switched Transport ordered is for Entrance Facilities, Direct-Trunked Transport and/or Tandem-Switched Transport. For Direct-Trunked Transport, and Entrance Facilities the ASR must specify channel type, channel interface, and any options desired. In addition, ASRs for Direct-Trunked Transport must specify Facility Hubs involved.

Additional ASR requirements for Switched Access Service are described in 4.2.5(V) and 4.3.2.

(B) The customer shall supply all details necessary to complete an order. The details may include the following: requested service date, customer name, customer designated location, end office, Interface Arrangement, type of Switched Access or Special Access, Supplemental Features, End Office Services and Signaling Interface, and originating and terminating capacity required. The customer may also be required to provide end user name and location, end user contact person, and end user premises access information to complete an order for Special Access.

When a customer orders mixed interstate and intrastate Switched Access, the customer is required to provide an estimate of the percent of traffic, as described in 4.3.3, which will be interstate. If the customer fails to provide this estimate, the order will not be processed until such time as the customer provides this estimate.

When a customer orders mixed-use special access service, the customer must indicate the jurisdiction based on the criteria in Section 5.1.6.

For Packet Switching Network Service *, the packet carrier must provide a Percent of Interstate Usage (PIU) in the Main Remarks section of the ASR when service is initially ordered. This PIU will be used as the basis for prorating the packet usage charges to the interstate and intrastate jurisdictions. The packet switching carrier may submit an updated PIU report in writing at any time following one full month's billing. The updated report will become effective on the first day of the next monthly billing period which begins at least 15 business days after the date the revised report is received by the Telephone Company.

(C) When the Alternate Traffic Routing Optional Arrangement is ordered, more than one CDL will be supplied and the number of trunks or BHMC for FGB, FGC and FGD to each CDL shall be specified.

When the Alternate Traffic Routing Basic Serving Element (BSE) is ordered, more than one CDL will be supplied and the number of trunks or BHMC for BSA-B, BSA-C, and BSA-D to each CDL shall be specified.

* Effective November 19, 2005, this service is no longer available to any customer who is not a customer as of November 19, 2005. Effective November 19, 2005, existing customers may not make additions, moves or changes to this service or submit any new orders for this service.

© 2022 Frontier Communications Parent, Inc. All rights reserved

3. ORDERING OPTIONS FOR FIA (Cont'd)

3.1 General (Cont'd)

3.1.1 Ordering Conditions (Cont'd)

The customer shall order SAC Access Service, as described in 4.2.1(E), in the same manner as ordering FGD or BSA-D with the following exceptions. For 500 SAC Access Service or 900 SAC Access Service, customers may request direct connections to only those offices designated by the Telephone Company as 500 SAC Access Service or 900 SAC Access Service screening offices. All 500 NXX or 900 NXX code assignments and administration shall be in accordance with the North American Numbering Plan (NANP). 800, 888 SAC Access Service is offered only in conjunction with the 800/888 Customer Identification Function as described in 4.2.11 and in conjunction with 800/888 Data Base Query Service as described in 4.2.19. Customers may request 800/888 SAC access connections to suitably equipped end offices and access tandem offices. A list of those offices will be provided upon request. All 800 or 888 number assignments shall be administered by the Number Administration Service Center (NASC) through the Service Management System (SMS).

500 NXX codes or 900 NXX codes to be activated and/or deactivated in conjunction with 500 SAC Access Service or 900 SAC Access Service, must be provided to the Telephone Company at least 30 business days prior to the effective date of the change.

An ASR is required by the Telephone Company for 500 NXX codes or 900 NXX codes to be activated or deactivated on an access facility level basis. The Switched Access Ordering Charge, as described in 4.5.2(A)(3)(g), will apply. In addition to the Switched Access Ordering Charge, the NXX Translation Charge, as described in Section 4.5.2(H)(8), shall apply to each 500 NXX code activated or deactivated in a Telephone Company switch capable of performing the customer identification function for 500 SAC Access Service. Customer assigned codes for which an ASR has not been received will be blocked.

When SAC Access Service is not terminated over a Special Access Line as in 5.1.1(C)(2), the customer must notify the Telephone Company of all local exchange telephone numbers to which SAC Access Service traffic is designated so that the Telephone Company can balance the end office in accordance with standard Telephone Company engineering practices for heavy volume lines.

© 2022 Frontier Communications Parent, Inc. All rights reserved

3. ORDERING OPTIONS FOR FIA (Cont'd)

3.1 General (Cont'd)

3.1.1 Ordering Conditions (Cont'd)

(E) To determine if adequate central office facilities (i.e., trunk circuits) for FGD or BSA-D will be available on the conversion date to equal access and to be eligible for the allocation in the following paragraph all customers (including those customers who convert existing FGA, FGB, FGC, BSA-A, BSA-B and BSA-C to FGD or to BSA-D) must order FGD or BSA-D 120 days prior to an end office conversion to equal access.

When trunk circuits are not available to meet the demand an allocation of available trunk circuits will be required. The allocation of available facilities is a three step process as described below:

In this example assume nine ICs have ordered BHMCs which necessitate 1,000 FGD trunks where only 800 FGD trunk circuits are available at the conversion date.

Step 1: Provide an initial flat 25% distribution of available trunk circuits to each requesting IC except for incremental requests over existing levels of FGC. (See table in Step 3.)

25% x 800 (available facilities) = 2

- $\frac{200}{(9-1)}$ = 25

Step 2: Assign all remaining trunk circuits proportionately, working from bottom up until ICs, as a result of the proration, are assigned less facilities than desired. First determine facilities available for apportionment.

- 800 - 175 = 625 (eligible ICs are A, B, C, D, E, F)

- $\frac{\text{(Desired Facilities)}}{\text{(Total Desired Facilities of Remaining Facilities)}} \times \text{Remaining Facilities}$

- F = $\frac{70}{1000 - 50}$ x 625 = 46 (assign only 45)(**)

- E = $\frac{80}{1000 - 120}$ x (625 - 45) = 53

(E receives less facilities than originally ordered, i.e., 53 + 25 = 78)

© 2022 Frontier Communications Parent, Inc. All rights reserved

3. ORDERING OPTIONS FOR FIA (Cont'd)

3.1 General (Cont'd)

3.1.1 Ordering Conditions (Cont'd)

Step 3: When an IC receives less facilities than desired, the remainder of ICs are allocated according to the following allocation factor:

$$\frac{\text{Remaining Facilities}}{\text{Total Desired Facilities of Remaining Eligible ICs of Access}} = \frac{625 - 98}{1000 - 200} = \frac{527}{800} = .659$$

- D = 100 x .659 = 66
- C = 200 x .659 = 132
- B = 200 x .659 = 132
- A = 300 x .659 = 197

ICs	Demand Desired (In Trunks)	Resources Available	Step 1 Flat 25% Distribution	Step 2	Step 3	Total Assigned Trunk Circuits
A	300	-	25	-	197	222
B	200	-	25	-	132	157
C(*)	200	-	-0-	-	132	132
D	100	-	25	-	66	91
E	80	-	25	53	-	78
F	70	-	25	45(**)	-	70
G	25	-	25	-	-	25
H	15	-	15(**)	-	-	15
I	10	-	10(**)	-	-	10
Total	1,000	800	175	98	527	800

(*) Request for additional trunk circuits by an IC with existing FGC or BSA-C
(**) Will not assign more than desired

(F) The provision of Special Access requires the selection of a Terminating Option as defined in 5.3. The provision of Switched Access requires an Entrance Facility as defined in 4.2.3(B). When a customer orders a DS3 SAL or DS3 Switched Entrance Facility, he may specify, on the ASR, if the interface is to be electrical or optical. In the event the customer does not specify an interface preference for DS3, the Telephone Company will provide an electrical interface.

When a customer orders a FiberConnect SAL the customer must specify an electrical interface and indicate the Network Channel Interface (NCI) code on the ASR. Each FiberConnect SAL accommodates four (4) DS1 transports.

When a customer orders a DS3C SAL, the Telephone Company will provide an optical interface unless service is provided via microwave, in which case an electro-magnetic interface is provided, or unless the customer specifies on the ASR a request for an electrical interface.

(8.)

© 2022 Frontier Communications Parent, Inc. All rights reserved

3. ORDERING OPTIONS FOR FIA (Cont'd)

3.1 General (Cont'd)

3.1.1 Ordering Conditions (Cont'd)

(G) When ordering Common Channel Signaling System 7 (CCS7) Access service as described in 4.2.10 and 4.5.2(G), the customer shall place an order for interconnection between the Telephone Company's Signal Transfer Point (STP) and the CDL. CCS7 Access service shall be ordered and installed pursuant to specifications in Technical Reference GR-905-CORE, Issue 11. Each service application used in conjunction with CCS7 Access service will require a separate ASR. When ordering additions or changes to existing CCS7 Access service facilities, the customer must refer to the specific CCS7 Access service facilities affected by the addition or change.

(H) When ordering Line Information Data Base (LIDB) Query Service, the customer shall provide an ASR specifying the originating point codes (OPCs) of the customer's designated operator service system (OSS) sending the query or queries, and the desired due date of the order. LIDB Query Service is provided in conjunction with interconnection to the Telephone Company's SS7 network as set forth in Sections 4 and 8.8.

An ASR is required from the customer to request the unblocking of 0+900 calls. For an initial customer order at the tandem or end office level, the Telephone Company must receive the request to unblock 0+900 dialing capability at least 60 business days prior to the requested effective date. To block or unblock 0+900 dialing capability for NXX codes assigned to a customer in an end office subtending a previously unblocked tandem, a request must be received at least 30 business days prior to the requested effective date of the change.

(J) An ASR is required from the customer to add 1+ coin traffic from an end office. At the customer's option, the ASR can be issued at a 1+ coin tandem or end office level. For an initial customer order at a 1+ coin tandem, the Telephone Company must receive the request at least 120 calendar days prior to the requested effective date. Standard provisioning intervals will apply to subsequent orders involving that 1+ coin tandem.

The customer must provide the Telephone Company with written notification stating that an order is being submitted pursuant to an agreement with a secondary service provider prior to the routing of 1+ interLATA coin traffic to a provider other than the customer.

(K) When ordering Operator Services, an ASR is required to establish a new FGC, FGD, BSA-C or BSA-D trunk group(s) or to add Operator Services to an existing FGC, FGD, BSA-C or BSA-D trunk group between the Telephone Company's Operator Services Switching Location and one CDL in the same LATA.

When measurement capability does not exist for Operator Services per call charges, a forecast of the number of Operator Services calls anticipated is required from the customer as set forth in 8.7.3 when the initial order for Operator Services is placed.

(x) GR-905-CORE, Issue 11, replaces TR-TSV-000905 in its entirety.

© 2022 Frontier Communications Parent, Inc. All rights reserved

3. ORDERING OPTIONS FOR FIA (Cont'd)

3.1 General (Cont'd)

3.1.1 Ordering Conditions (Cont'd)

(L) When ordering Signaling System 7 (SS7) Out of Band Signaling as described in 4.2.5(AA), the customer shall provide an ASR specifying a reference to existing CCS7 Access service facilities or reference to a related ASR for CCS7 Access service as described in 3.1.1(G). The customer's ASR shall also include STP point codes, STP location identifier codes, FGD or BSA-D trunk or 800/877/888 Service Access trunk circuit identification codes, and switch type. When ordering SS7 Out of Band Signaling for FGD or BSA-D, the customer shall specify that all traffic carried by that FGD or BSA-D will be equipped with out of band signaling. The customer shall work cooperatively with the Telephone Company to determine the number of CCS7 Access service connections required to handle the customer's SS7 Out of Band Signaling traffic.

When ordering Expanded Interconnection Services (EIS) as described in 17.5, the customer shall place an ASR for the Cross Connect, as described in 4.5.3 and 5.1.1, to interconnect the facilities of the Telephone Company to the facilities of the customer. Each service application used in conjunction with EIS will require a separate ASR. When ordering additions or changes to the existing EIS facilities, the customer must refer to the specific EIS facilities affected by the addition or change.

When a customer orders Tandem Switch Signaling (TSS), as described in 4.2.5(AC) and 4.2.21, to be established with the installation of a new FGD or BSA-D trunk group, 500 SAC Access Service, or 900 SAC Access Service trunk group, the Switched Access Ordering charge, per ASR and the appropriate Service Installation charge will apply for the installation of the FGD or BSA-D or 900 SAC Access services. TSS can only be provided from equal access end offices.

When a customer orders Tandem Switch Signaling to be added to an existing FGD or BSA-D trunk group, 500 SAC Access Service or 900 SAC Access Service trunk group or to a pending ASR, only the Switched Access Ordering charge and the Design Change charge will apply for the addition of the optional arrangement.

(O) When ordering FGD or BSA-D Switched Access with 950-XXXX Access as described in 4.2.5, the customer shall provide an ASR specifying which 950-XXXX access code(s) are to be routed and the FGD or BSA-D Switched Access Service over which resulting originating 950-XXXX access code calls are to be routed.

(P) When ordering Carrier Identification Parameter (CIP) as described in 4.2.5(AE), the customer shall provide an ASR specifying a reference to existing FGD or BSA-D switched access services or reference to a related ASR for FGD or BSA-D switched access services. The customer's ASR shall specify the information necessary to identify the trunk group to which the CIP is to be added.

(Q) For Dedicated Optical Transport Service, the Telephone Company will construct the customer's dedicated ring. The customer must provide the Telephone Company with complete and accurate information to design and construct the customer's dedicated ring. Construction will not begin until the customer and the Telephone Company agree on the design of the ring. The order date for the ring is the date on which the customer provides the Telephone Company with a complete and accurate ASR for the service. In the event that the customer cancels its request, or part of its request, for construction of the ring, cancellation charges as set forth in 3.2.6 following will apply.

© 2022 Frontier Communications Parent, Inc. All rights reserved

3. ORDERING OPTIONS FOR FIA (Cont'd)

3.1 General (Cont'd)

3.1.1 Ordering Conditions (Cont'd)

(R) For Dedicated SONET Ring (DSR) the Telephone Company will construct the customer's dedicated ring. The customer must provide the Telephone Company with complete and accurate information to design and construct the customer's dedicated ring. Construction will not begin until the customer and the Telephone Company agree on the design of the ring. The order date for the ring is the date on which the customer provides the Telephone Company with a complete and accurate ASR for the service. In the event that the customer cancels its request, or part of its request, for construction of the ring, cancellation charges as set forth in 3.2.6 following will apply.

(S) When ordering a lower bit rate service over another customer's DSR (Host Customer) that is equipped with the Customer Service Management (CSM) optional feature as set forth in Section 20.2(J)(1) following, the lower bit rate service customer (Service User) must provide a Letter of Authorization (LOA) that is signed by both the Service User and the Host Customer. The LOA must include an acknowledgment that the Host Customer has the ability to perform CSM functions (e.g., reconfiguration) on the portion of the Service User's service that rides the DSR.

© 2022 Frontier Communications Parent, Inc. All rights reserved

3. ORDERING OPTIONS FOR FIA (Cont'd)

3.1 General (Cont'd)

3.1.2 Provision of Other Services

(A) At the option of a customer, Directory Assistance, Additional Labor, Telecommunications Service Priority (TSP), Testing, LIDB Query Service and Special Routing services may be ordered with an ASR at the same time the ASR is accepted by the Telephone Company. Such requests will be considered to be supplemental to the ASR. The rates and charges for these services as set forth in other sections of this Guide will apply in addition to the ordering charges set forth in this section and the rates and charges for the Switched Access or Special Access with which they are associated.

(B) The items listed in (A) preceding may subsequently be added to the ASR at any time, up to and including the service date established by the ASR. When ordered subsequently, charges for ASR modifications as set forth in 3.2.2 will apply.

3.1.3 Special Construction

(A) When the Telephone Company determines that the installation of service meets the guidelines of the Special Construction tariffs as set forth in Section 1.3 preceding, the customer is notified and conditions are negotiated as prescribed by the Special Construction tariffs.

(B) The regulations, rates and charges for Special Construction (as set forth in the tariffs referenced in Section 1.3 preceding) are in addition to the regulations, rates and charges specified in this section.

(C) Special Construction is not applicable to EIS.

© 2022 Frontier Communications Parent, Inc. All rights reserved

3. ORDERING OPTIONS FOR FIA (Cont'd)

3.2 Access Service Request

An ASR is used by the Telephone Company to receive orders for the following types of FIA requested by the customer:

- Switched Access as in Section 4,
- Special Access as in Section 5,
- Expanded Interconnection Service as in Section 17, and
- Other Services as in other sections of the tariff.

3.2.1 Service Date Intervals

The time required to provision service is known as the service date interval. Such intervals will be established in accordance with published service date interval guidelines which are available to customers upon request. The service date interval guidelines will apply to ASRs and will specify the quantities of FIA that can be provided on the same service date. The customer may request a service date other than that established pursuant to the service date interval guidelines, and the Telephone Company, where possible, will establish the service date in accordance with such request, subject, however, to other applicable provisions of this Guide.

© 2022 Frontier Communications Parent, Inc. All rights reserved

3. ORDERING OPTIONS FOR FIA (Cont'd)

3.2 Access Service Request (Cont'd)

3.2.2 ASR Modifications

The customer may request a modification of its ASR prior to the service date. The Telephone Company will make every effort to accommodate a requested modification when it is able to do so with the normal work force assigned to complete such an ASR within normal business hours. If the modification cannot be made with the normal work force during normal business hours, the Telephone Company will notify the customer. If the customer still desires the ASR modification, the Telephone Company will schedule a new service date. All charges for ASR modifications will apply on a per occurrence basis. Where a new ASR may be required the appropriate charges in other sections of this Guide will be applicable.

Any increase in the number of Switched Access lines for FGA or BSA-A trunks or BHMCs for FGB, FGC, FGD, BSA-B, BSA-C, BSA-D and SAC Access Service; Special Access circuits; STP Port Terminations and CCS7 access facilities; or OSS OPCs in conjunction with LIDB Query Service, and Advanced Communications Network services will require the issuance of a new ASR for the incremental capacity.

(A) Service Date Change Charge

ASR service dates for the installation of new services or rearrangement of existing services may be changed. Except as otherwise specified in Section 3.2.6(C)(3), a Service Date Change Charge will apply for each service date change after the plant test date of the original ASR.

For Switched Access Tandem-Switched Transport or ASRs requesting additional trunk activations on existing Direct-Trunked Transport facilities, the new service date may not exceed the original service date by more than 30 calendar days. If the requested service date is more than 30 calendar days after the original service date, the ASR will be canceled by the Telephone Company and cancellation charges in 3.2.6 will apply.

For Special Access, Ethernet Private Line, as applicable, Switched Access Entrance Facilities, and Switched Access Direct-Trunked Transport, subject to Section 3.2.6 following, a customer may negotiate an extension of a service date of an ASR for installation of new services or rearrangements of existing services.

With the agreement of the Telephone Company, a new service date may be established that is prior to the original service date and the provisions in (E) will apply in addition to the Service Date Change Charge.

© 2022 Frontier Communications Parent, Inc. All rights reserved

3. ORDERING OPTIONS FOR FIA (Cont'd)

3.2 Access Service Request (Cont'd)

3.2.2 ASR Modifications (Cont'd)

(A) Service Date Change Charge (Cont'd)

Jurisdiction	Rate	
California-WC		
Special Access		
Price Cap	$64.00	(D)
Price Bands A, B and C	$64.00	(D)
All Other Services	$64.00	(D)
		(D)
		(D)
Illinois		
Special Access		
Price Cap	$66.47	
Price Bands A, B and C	$66.47	
All Other Services	$66.47	
Indiana		
Special Access		
Price Cap	$66.92	
Price Bands A, B and C	$66.92	
All Other Services	$66.92	
Michigan		
Special Access		
Price Cap	$65.45	
Price Bands A, B and C	$65.45	
All Other Services	$65.45	
N Carolina		
Special Access		
Price Cap	$58.67	
Price Bands A, B and C	$58.67	
All Other Services	$58.67	

© 2022 Frontier Communications Parent, Inc. All rights reserved

3. ORDERING OPTIONS FOR FIA (Cont'd)

3.2 Access Service Request (Cont'd)

3.2.2 ASR Modifications (Cont'd)

(A) Service Date Change Charge (Cont'd)

Jurisdiction	Rate	
Ohio		
Special Access		
Price Cap	$64.86	(D)
Price Bands A, B and C	$64.86	(D)
All Other Services	$64.86	(D)
		(D)
		(D)
S Carolina		
Special Access		
Price Cap	$58.83	(D)
Price Bands A, B and C	$58.83	(D)
All Other Services	$58.83	(D)
		(D)
		(D)
Wisconsin		
Special Access		
Price Cap	$64.86	(D)
Price Bands A, B and C	$64.86	(D)
All Other Services	$64.86	(D)

Certain material on this page formerly appeared on Page 3-11.

© 2022 Frontier Communications Parent, Inc. All rights reserved

3. ORDERING OPTIONS FOR FIA (Cont'd)

3.2 Access Service Request (Cont'd)

3.2.2 ASR Modifications (Cont'd)

(B) Partial Cancellation Charge

Any decrease in the number of Switched Access lines for FGA or BSA-A; trunks or BHMCs for FGB, FGC, FGD, BSA-B, BSA-C, BSA-D and SAC Access Service; Special Access circuits; STP Port Terminations and CCS7 switched access facilities; OSS OPCs in conjunction with LIDB Query Service, or Advanced Communications Network services will be treated as a partial cancellation.

A customer may cancel any number of Special Access circuits or Advanced Communications Network services.

When a customer partially cancels the service ordered on an ASR, charges will apply as follows:

(1) Except as specified in 3.2.6, when an ASR for Switched Access Service is partially canceled on or after the Application Date, the charge will be determined by multiplying the total Installation nonrecurring charges for the canceled portion of the order by the number of business days elapsed since the Application Date and dividing that figure by the number of days in the service interval and adding the Switched Access Ordering Charge.

(2) When an ASR for Special Access Service or Advanced Communications Network service is partially canceled, on or after the Application Date, the charge will be determined by multiplying the total Special Access or Advanced Communications Network services nonrecurring charges for the canceled portion of the order by the number of business days elapsed since the Application Date and dividing that figure by the number of days in the service interval.

(3) When a customer cancels part of an ASR for which billing has commenced as provided in 3.2.2(A) and 3.2.6(A), cancellation charges in 3.2.6(C)(3) will apply to that part of the ASR being canceled.

© 2022 Frontier Communications Parent, Inc. All rights reserved

3. ORDERING OPTIONS FOR FIA (Cont'd)

3.2 Access Service Request (Cont'd)

3.2.2 ASR Modifications (Cont'd)

(C) Discontinuance of Service

A customer may discontinue FIA that is in service at any time. The request for discontinuance of service must be received by the Telephone Company at least thirty (30) business days prior to the date on (C) which service is to be disconnected and billing discontinued. The disconnect request may be submitted via the same method(s) used to place orders. The customer must notify the Telephone Company of a delay or cancellation in the discontinuance request prior to the disconnect date. The Telephone Company, where possible, will establish the disconnect date in accordance with such request. Billing and service will then continue until the new requested disconnect date. If a service is discontinued prior to the expiration of the Minimum Period in 3.2.4, the Minimum Period Charges in 3.2.5, may apply.

Design Change Charge

The customer may request a design change to a pending ASR for both Switched and Special Access or request a change to an existing Switched Access Service. A design change is a change which requires engineering review. The regulations, rates and charges for a design change are in Section 4.5.2(A)(3)(i) for Switched Access Service, and Section 5.6.1(F)(1) for Special Access Service, and are in addition to the regulations, rates and charges specified in this section.

(E) Expedited Order Charge

When placing an Access Service Request a customer may request a service date that is prior to the Telephone Company's published service date interval. If the Telephone Company determines that the service can be provided on the requested date, an Expedited Order Charge will apply.

A customer may also request an earlier service date on a pending Access Service Request. If the customer's request can be accommodated, a Service Date Change Charge as described in Section 3.2.2(A) will apply in addition to the Expedited Order Charge.

If the Telephone Company is subsequently unable to meet an agreed upon expedited service date, the Expedited Order Charge will not apply.

In the event that the Telephone Company provides service on an expedited basis by customer request and the customer then delays service, an additional Service Date Change Charge as described in Section 3.2.2(A) will apply.

The Expedited Order Charge applies per order, based on the requested service date. A request to expedite service to be available the next day is a one day expedite, a request for service in two days is a two day expedite, and so on to a request for service a week from the request date is a seven day expedite. A request for an expedite of more than seven days will be billed the seven day expedite rate. Expedited orders for same day service are not available. If the requested service date is at the published service date interval or later, no Expedited Order Charge will apply.

Access Ordering Guidelines prohibit expedite orders when disconnecting services. (N)

© 2024 Frontier Communications Parent, Inc. All rights reserved

3. ORDERING OPTIONS FOR FIA (Cont'd)

3.2 Access Service Request (Cont'd)

3.2.2 ASR Modifications (Cont'd)

(E) Expedited Order Charge (Cont'd)

Rates for Expedited Order Charges are as follows:

	California-WC	Illinois	C
One Day Expedite	$1,536.29	$1,534.20	C
Two Day Expedite	1,274.14	1,251.20	C
Three Day Expedite	1,011.99	968.20	C
Four Day Expedite	749.84	685.20	C
Five Day Expedite	697.41	628.60	C
Six Day Expedite	644.98	572.00	C
Seven Day Expedite	592.55	515.40	C

	Indiana	Michigan	N Carolina
One Day Expedite	$1,534.48	$1,534.15	$1,537.02
Two Day Expedite	1,254.38	1250.65	1,282.27
Three Day Expedite	974.28	967.15	1,027.52
Four Day Expedite	694.18	683.65	772.77
Five Day Expedite	638.16	626.95	721.82
Six Day Expedite	582.14	570.25	670.87
Seven Day Expedite	526.12	513.55	619.92

	Ohio	S Carolina	C
One Day Expedite	$1,534.33	$1,536.91	C
Two Day Expedite	1,252.58	1,280.96	C
Three Day Expedite	970.83	1,025.01	C
Four Day Expedite	689.08	769.06	C
Five Day Expedite	632.73	717.87	C
Six Day Expedite	576.38	666.68	C
Seven Day Expedite	520.03	615.49	C

© 2022 Frontier Communications Parent, Inc. All rights reserved

3. ORDERING OPTIONS FOR FIA (Cont'd)

3.2 Access Service Request (Cont'd)

3.2.2 ASR Modifications (Cont'd)

(E) Expedited Order Charge (Cont'd)

Rates for Expedited Order Charges (Cont'd)

	Wisconsin	C
One Day Expedite	$1,535.11	C
Two Day Expedite	1261.31	C
Three Day Expedite	987.51	C
Four Day Expedite	713.71	C
Five Day Expedite	658.95	C
Six Day Expedite	604.19	C
Seven Day Expedite	549.43	C

3.2.3 Selection of Facilities for Access Service

(A) Requests for a specific circuit is not an option of the customer except as provided for under Special Facilities Routing of FIA in Section 9.

Material on this page previously appeared on Page 3-13.

© 2022 Frontier Communications Parent, Inc. All rights reserved

3. ORDERING OPTIONS FOR FIA (Cont'd)

3.2 Access Service Request (Cont'd)

3.2.4 Minimum Period

(A) The Minimum Period for which Special Access, End User FIA, Frame Relay, Packet Switching Network Service*, STP Port Terminations, Basic Service Elements (BSEs) CCS7 Access facilities, Monthly Ethernet Private Line rate elements, Presubscribed Interexchange Carrier Charge are provided and for which charges are applicable, is one month, except as in B through O following or in other sections of this Guide.

(B) The Minimum Period for Miscellaneous Services is in Section 6.

(C) The Minimum Period for Ancillary Services is in Section 8.

The Minimum Period for temporary videoband and program audio Special Access is the minimum period for which rates are established in Section 5.7 and 5.8.

(E) (Reserved for future use.)

(F) The Minimum Period for FGA, FGB, FGC, BSA-A, BSA-B, BSA-C, SAC Access Service, and also for FGD or BSA-D ordered after the conversion of an end office to equal access, is one month. For the application of the minimum period charges for Switched Access Service FGB, FGC, BSA-B, BSA-C, SAC Access Service, and for FGD or BSA-D ordered after the conversion of an end office to Equal Access, it is assumed the last identical capacity placed in service is the first one discontinued.

(G) For FGD or BSA-D ordered prior to the conversion of an end office to equal access and (1) cancelled prior to the conversion date, a Cancellation Charge in 3.2.6 applies or (2) cancelled on or after the equal access conversion date, a Discontinuance Charge in 3.2.7 applies.

(H) The minimum periods for Special Access DS3 Service are in Section 5.6.11.

The minimum periods for Expanded Interconnection Services are in Section 17.9.2.

(J) The minimum period for the month-to-month option for Video Digital Transport - 270 Mbps service is 3 months.

(K) The minimum periods for Advanced Communications Network services are set forth under Section 16.

(L) The minimum periods for Ethernet Private Line services are set forth in Section 20.3.

* Effective November 19, 2005, this service is no longer available to any customer who is not a customer as of November 19, 2005. Effective November 19, 2005, existing customers may not make additions, moves or changes to this service or submit any new orders for this service.

© 2022 Frontier Communications Parent, Inc. All rights reserved.

3. ORDERING OPTIONS FOR FIA (Cont'd)

3.2 Access Service Request (Cont'd)

3.2.4 Minimum Period (Cont'd)

The minimum period for Special Access DS1 Service that is included in an Eight and Ten Year DS1 Term Volume Plan (ETTVP) is set forth in Section 5.6.14(H) following.

(O) The minimum period for Special Access DS3 Service that is included in a DS3 Term Volume Plan (DS3 TVP) is set forth in Section 5.6.19 following.

3.2.5 Minimum Period Charges

When FIA are discontinued prior to the expiration of the Minimum Period, charges are applicable for the remaining month(s) and/or fraction thereof of the Minimum Period.

Except as specifically stated in other sections of this Guide, the Minimum Period Charge will be determined as follows:

(A) For Switched Access usage sensitive rate elements, the charge for the minimum period, or fraction thereof, is equal to the applicable rates for the actual or assumed usage for the minimum period or such fraction thereof. For Switched Access flat-rated monthly elements (i.e., Entrance Facility, Direct-Trunked Transport and Multiplexing rates), the charge for the minimum period or fraction thereof is the applicable monthly rates for the service.

© 2022 Frontier Communications Parent, Inc. All rights reserved.

3. ORDERING OPTIONS FOR FIA (Cont'd)

3.2 Access Service Request (Cont'd)

3.2.5 Minimum Period Charges (Cont'd)

(B) For Special Access, the charge is the applicable monthly rate for the service(s) as specified in Section 5.7. For Special Access DS3 Service, additional information regarding the calculation of minimum service period charges can be found in Section 5.6.

(C) For End User Common Lines, the charge is the applicable monthly rate for the FIA as in 13.11.

For FGD or BSA-D ordered prior to conversion of an end office to equal access, but canceled after the equal access conversion date, a Discontinuance Charge in 3.2.7 applies.

(E) For part-time or occasional program audio Special Access services, the rates in 5.6.1, 5.7, and 5.8 will apply.

(F) For FGA, FGB, BSA-A, and BSA-B Type service where measurement equipment is not available and the Assumed Minutes of Use Monthly Surrogate is used, the charge will be the prorated amount on a daily basis, calculated at 1/30 of the applicable rate shown in Section 4.6.7, for each day of the minimum period the facility was in service.

(G) For Ethernet Private Line services, the charge is the applicable monthly rate for the service(s) as in 20(L).

(H) For the Presubscribed Interexchange Carrier Charge, the charge is the applicable monthly rate as in Section 12.

3.2.6 Cancellation of an ASR

(A) A customer may cancel ordered FIA on any date prior to the service date. The cancellation date is the date the Telephone Company receives written or verbal notice from the customer that the ASR is to be canceled. The verbal notice must be followed by written confirmation within 10 days.

For Switched Access Tandem-Switched Transport or ASRs requesting additional trunk activations on existing Direct-Trunked Transport facilities, if a customer is unable to accept service within 30 calendar days of the original service date, the ASR shall be considered canceled and charges in (C) and will apply. In such instances, the cancellation date shall be the 31st calendar day beyond the original service date of the ASR.

© 2022 Frontier Communications Parent, Inc. All rights reserved.

3. ORDERING OPTIONS FOR FIA (Cont'd)

3.2 Access Service Request (Cont'd)

3.2.6 Cancellation of an ASR (Cont'd)

(A) (Continued)

For Special Access Service, Ethernet Private Line, as applicable, Switched Access Entrance Facilities and Switched Access Direct-Trunked Transport, if a customer or a customer's end user is unable to accept service within 30 calendar days of the original service date, the customer may elect one of the following options:

- The customer may take no action and the ASR shall be canceled by the Telephone Company on the 31st day with the appropriate Cancellation Charge as set forth in this Guide applied; or

- The customer may choose to commence billing for the service on the 31st day.

(B) ASR costs are considered to have started when the Telephone Company incurs any cost in connection therewith or in preparation thereof which would not otherwise have been incurred. These costs include but are not limited to preliminary engineering, orders to suppliers, and other similar items of cost.

(C) When a customer cancels an ASR for the installation of new service, or an ASR to modify existing service, charges will apply as follows:

(1) When an ASR for Switched Access Service is canceled on or after the Application Date, the Cancellation Charge is calculated, on a per ASR basis, by multiplying the total Installation nonrecurring charges for the quantity ordered by the number of business days elapsed since the Application Date, and dividing that figure by the number of days in the service interval (i.e., the number of business days between the Application Date and the last day of the service date interval) and adding the Switched Access Ordering Charge.

(2) When an ASR for Special Access Service or Ethernet Private Line, as applicable, is canceled (C)
on or after the Application Date, except where there is a specific cancellation charge set forth (C)
such as after the 30th day, the Cancellation Charge is the Nonrecurring Charge for the (C)
service(s) multiplied by the quantity ordered on a per ASR basis. (C)

© 2022 Frontier Communications Parent, Inc. All rights reserved

3. ORDERING OPTIONS FOR FIA (Cont'd)

3.2 Access Service Request (Cont'd)

3.2.6 Cancellation of an ASR (Cont'd)

(3) When a customer chooses the option to commence billing for the service on the 31st day under 3.2.6(A) preceding, the customer must submit an ASR Modification to the existing ASR prior to calendar day 31 from the original service date to request a new service date. A Service Date Change Charge will not apply for such service date change; however, if subsequent additional service date changes are requested after calendar day 31, the Service Date Change Charge will apply, per request.

When a customer chooses the option to commence billing for the service on the 31st day under 3.2.6(A) preceding, monthly recurring charges for the service will begin accruing at calendar day 31 after the original service date. The initial or subsequent bill for the service will include these accrued charges and any additional nonrecurring charges in addition to billable charges specified in 2.4.1(C).

If the customer cancels the order after the 30th day, the customer will be billed the accrued monthly recurring charges specified preceding plus applicable nonrecurring charges. These charges will be computed commencing at day 31 after the original service date up to and including the cancellation date. The customer will be responsible for applicable minimum period and termination liability charges.

© 2022 Frontier Communications Parent, Inc. All rights reserved

3. ORDERING OPTIONS FOR FIA (Cont'd)

3.2 Access Service Request (Cont'd)

3.2.6 Cancellation of an ASR (Cont'd)

For cancellation of an ASR for Switched Access FGD or BSA-D before an end office converts to equal access, cancellation charges will apply if the Telephone Company is notified of the cancellation within a period of 12 months prior to the scheduled service date. Cancellation charges apply to each trunk cancelled.

When, due to a shortage of FGD or BSA-D facilities an allocation of FGD or BSA-D facilities is made, cancellation charges apply only to circuits allocated to the customer.

Cancellation charges will accrue to the maximum in equal monthly increments (i.e., maximum cancellation charge divided by 12) beginning twelve months before an end office converts to equal access. Maximum cancellation charges are listed in Section 3.2.8. The charge applied will be the accrued charge in the month during which notice of cancellation is received by the Telephone Company.

Example: Illinois

Month During Which Notice Is Received Before Conversion Date	Charge (Per Trunk Cancelled)
12	$68.77
11	137.54
10	206.30
9	275.07
8	343.84
7	412.61
6	481.37
5	550.14
4	618.91
3	687.68
2	756.44
1	825.21

© 2022 Frontier Communications Parent, Inc. All rights reserved

3. ORDERING OPTIONS FOR FIA (Cont'd)

3.2 Access Service Request (Cont'd)

3.2.6 Cancellation of an ASR (Cont'd)

For (E) through following, the cancellation charge is the charge shown for the last date passed on the order and will apply when a customer cancels an order or part of an order prior to accepting service.

(E) Dedicated SONET Optical Transport Service (DSOTS)

Cancellation Charges Which Apply After the Order Date

(Jurisdiction: Illinois, (C)
Indiana, Michigan, North Carolina, Ohio, (C)
South Carolina, and Wisconsin) (C)

	Category I	
	31st to 60th day after ordering	61st day after ordering to completion of Ring
- per Primary Node	$13,000.00	$26,000.00
- per Expansion Node	26,000.00	52,000.00
- per Mid-span Amp.	5,600.00	10,600.00
- per Node Amp.	5,600.00	10,600.00

	Category II	
	31st to 60th day after ordering	61st day after ordering to completion of Ring
- per Primary Node	$13,000.00	$26,000.00
- per Expansion Node	26,000.00	52,000.00
- per Mid-span Amp.	5,600.00	10,600.00

© 2022 Frontier Communications Parent, Inc. All rights reserved

3. ORDERING OPTIONS FOR FIA (Cont'd)

3.2 Access Service Request (Cont'd)

3.2.6 Cancellation of an ASR (Cont'd)

(F) Dedicated SONET Ring

Cancellation Charges Which Apply Prior to Issuance of ASR: per Node, Port Node or per High Speed Interface

	Within the first 30 days of ordering	31st to 60th day after ordering	61st day after ordering to completion of construction
- per OC3 Node/ High Speed Interface	none	$ 565.00	$ 1,130.00
- per OC12 Node/ High Speed Interface	none	962.00	1,924.00
- per OC48 Node/ High Speed Interface	none	2,159.00	4,318.00
- per OC192 Node/ High Speed Interface	none	7,010.00	14,020.00

Cancellation Charges Which Apply After Issuance of ASR or Following Notification that Construction is Complete: per Node, Port Node, or per High Speed Interface

	All Critical Dates
- per OC3 Node/ High Speed Interface	$ 1,130.00
- per OC12 Node High Speed Interface	1,924.00
- per OC48 Node/ High Speed Interface	4,318.00
- per OC192 Node/ High Speed Interface	14,020.00

© 2023 Frontier Communications Parent, Inc. All rights reserved.

3. ORDERING OPTIONS FOR FIA (Cont'd)

3.2 Access Service Request (Cont'd)

3.2.6 Cancellation of an ASR (Cont'd)

(G) Ethernet Private Line (per On-Net Channel Extension)

Cancellation Charges Which Apply After the Order Date

	31st to 60th day after ordering	61st day after ordering to completion of Circuit
- 10-Mbps, 100-Mbps, or 1-Gbps Ethernet - 10-Mbps Ethernet Mapped to STS-1 - 100-Mbps Ethernet Mapped to STS-1 or OC3c - 1-Gbps Ethernet Mapped to OC3, OC12, OC12c, or OC48	$175.00	$350.00

(H) Ethernet Private Line (per Access Aggregation Port)

Cancellation Charges Which Apply After the Order Date

	31st to 60th day after ordering	61st day after ordering to completion of Circuit
- OC3 Aggregation Port - OC12 Aggregation Port - OC48 Aggregation Port	$175.00	$350.00

Dedicated SONET Entrance Facility (DSEF)
Cancellation Charges Which Apply After the Order Date

- Per Switched Access STS1DSEF Termination	$1,000.00	
- Per Special Access STS1DSEF Termination		(C)
Price Cap	$1,000.00	
Price Band A	$1,000.00	
Price Band B	$1,000.00	
Price Band C	$1,000.00	(C)

© 2022 Frontier Communications Parent, Inc. All rights reserved.

3. ORDERING OPTIONS FOR FIA (Cont'd)

3.2 Access Service Request (Cont'd)

3.2.7 Discontinuance of Switched Access FGD or BSA-D

A Discontinuance Charge applies if a customer discontinues FGD or BSA-D service provided at the conversion of an end office to equal access. The Discontinuance Charge applies to each FGD or BSA-D trunk discontinued with one exception. When the FGD or BSA-D service is a result of an upgrade from FGB, FGC, BSA-B, BSA-C or SAC Access Service trunks in service prior to conversion to equal access, the Discontinuance Charge will only apply to the number of FGD or BSA-D trunks being discontinued that are in excess of the number of FGB, FGC, BSA-B, BSA-C or SAC Access Service trunks in service prior to conversion to equal access. However, the customer may still be liable for any Minimum Period charges in 3.2.5 that may be applicable to the FGB, FGC, BSA-B, BSA-C or SAC Access Service trunks that were in service prior to conversion. For purposes of calculating the Discontinuance Charge the Maximum Discontinuance Charge will be amortized in equal monthly increments (i.e., Maximum Discontinuance Charge divided by 12) over a 12 month period beginning on the date the end office converts to equal access. The Maximum Discontinuance Charge is equal to the FGD or BSA-D Maximum Cancellation Charge in 3.2.8. The charge assessed will be the unamortized portion of the Maximum Discontinuance Charge.

Example: California -WC

Month During Which Service is Discontinued After Conversion Date	Charge (Per Trunk Discontinued)
1	$402.75
2	369.19
3	335.63
4	302.07
5	268.51
6	234.95
7	201.39
8	167.83
9	134.27
10	100.71
11	67.156
12	33.59

© 2022 Frontier Communications Parent, Inc. All rights reserved.

3. ORDERING OPTIONS FOR FIA (Cont'd)

3.2 Access Service Request (Cont'd)

3.2.8 Reserved

© 2022 Frontier Communications Parent, Inc. All rights reserved.

3. ORDERING OPTIONS FOR FIA (Cont'd)

3.3 Access Service Requests For Services Provided By More Than One Telephone Company

(A) Switched or Special Access Services provided by more than one telephone company are services where one end of the Switched Transport or Special Transport facility is in the operating territory of one telephone company and the other end of the facility is in the operating territory of a different telephone company.

The ordering procedure for this service is in (1) and (2). The telephone company will notify the customer, identifying which ordering procedures will apply.

(1) Single Company Billing

The telephone company receiving the ASR from the customer will arrange to provide the service and bill the customer as in 2.7.2. The customer will place the ASR with the telephone company as follows:

(a) For Switched Access Services the customer will place the ASR with the telephone company in whose territory the following is located:

- FGA or BSA-A - dial tone office

When the preceding is not in the same telephone company's territory as the customer designated location (CDL), the customer must supply a copy of the ASR to the telephone company in whose territory the CDL is located.

© 2022 Frontier Communications Parent, Inc. All rights reserved.

3. ORDERING OPTIONS FOR FIA (Cont'd)

3.3 Access Service Requests For Services Provided By More Than One Telephone Company

(A) (Cont'd)

(2) Meet Point Billing

Each telephone company will provide its portion of the Switched Transport or Special Transport service within its operating territory to the meet point with the other telephone company(s). The BP will be determined by the telephone companies involved in providing the FIA service and listed in the NECA Tariff FCC No. 4.

For all Switched Access Services and all Special Access Services the order will be placed with the telephone company as specified in the Multiple Exchange Carrier Ordering and Design (MECOD) Guidelines.

(B) When FGA or BSA-A is ordered in a Multicarrier Access Area, the customer must provide a copy of the order to the SEC. The SEC will bill as in 2.7.

© 2022 Frontier Communications Parent, Inc. All rights reserved.

4. RESERVED FOR FUTURE USE

© 2022 Frontier Communications Parent, Inc. All rights reserved.

5 SPECIAL ACCESS

5.1 General

Special Access provides a transmission path to connect CDLs* within a LATA** for Interstate Telecommunications. Special Access provided to a customer may be connected directly to customer facilities, through Telephone Company Hub Wire Centers where bridging or multiplexing functions are performed, and/or may be connected to access facilities of another telephone company or companies in the joint provision of Special Access Service as well as may be connected to Switched Access as set forth in Section 4. Special Access Services may also be connected to a customer's transmission equipment and facilities using a DS1 or DS3 Cross Connect arrangement where the customer is provided Expanded Interconnection Service (EIS) as defined in Section 17. High Capacity SALs may also be connected to an in-service Telephone Company provided integrated optical service, provided that such connections are technically and operationally feasible, as determined by the Telephone Company.

The provision of Switched Access and Special Access in combination is normally for, but not limited to, the use of WATS or WATS-type Access. When Special Access is connected to Switched Access, the terms, conditions and rates for the facilities between the end user's CDL and the WATS Serving Office are as set forth in this section of the tariff; the terms, conditions and rates for the facilities between the WATS Serving Office and the IC's CDL, as well as the switching functionalities (e.g., end user access codes, screening) are as set forth in Section 4 of this Guide.

Special Access can be provided in either analog or digital format. Analog formats are differentiated by spectrum and bandwidth. Digital formats are differentiated by bit rate. The specific types of Special Access (e.g., Voiceband, Digital Data Service) provided are described in 5.2 following.

5.1.1 Rate Elements

With the exception of Video Digital Transport Service, there are six basic rate elements which apply to Special Access Service:

Special Transport (described in 5.1.1(B) following)
Special Transport Termination (described in 5.1.1(G) following)
Special Access Line (described in 5.1.1(C) following)
Special Access Cross Connect (described in 5.1.1following)
Supplemental Features (described in 5.4 following)
Multiplexing Arrangements (described in 5.5 following)

Additionally, rates and charges for Integrated Optical Service Riders may also apply to Special Access connected to Integrated Optical Service Riders as set forth in Section 24.1 following.

The following is a list of GTOC's Open Network Architecture (ONA) Special Access Basic Service Elements (BSEs) which provide a cross-reference to the generic ONA product names.

Generic Name	The Telephony Company Name
Access to Clear Channel Transmission	Clear Channel Capability
Automatic Protection Switching	Automatic Protection Switching
Bridging	Bridging
Conditioning	Conditioning
Data Over Voice (DOV) Service	Data Transmission Service
Secondary Channel Capability	Digital Data Service - Secondary Channel
Multiplexing - Digital 2000	Multiplexing Arrangements

(A) (Reserved for Future Use)

* Telephone Company Centrex CO-like switches are considered to be CDLs for the purposes of this Guide.

** DS1 and DS3 Special Access Services may be provided between the service areas shown under 5.2.7(H), where facilities and conditions permit.

© 2022 Frontier Communications Parent, Inc. All rights reserved.

5 SPECIAL ACCESS (Cont'd)

5.1 General (Cont'd)

5.1.1 Rate Elements (Cont'd)

(B) Special Transport

(1) The Special Transport rate element provides for the transmission facilities between the serving wire centers associated with two CDLs, between a serving wire center associated with an end user's CDL and a WATS Serving Office, between a serving wire center associated with a CDL and a Telephone Company Hub Wire Center, between two Telephone Company Hub Wire Centers or between a serving wire center associated with a CDL and a serving wire center where connection to an advanced data service# occurs. Connection to Telephone Company provided DS1 or DS3 Special Transport within a serving wire center for customers with EIS will require a Special Access Cross Connect arrangement as described in 5.1.1.

The Special Transport element is distance sensitive, except for MetroLAN, and varies with type of capability (i.e., analog or digital) and type of facility (e.g., Voiceband, Digital Data Service, etc.). Special Transport may be provided by more than one telephone company. The method of calculating applicable airline miles for rating purposes for Special Access is specified in 2.7 preceding.

MetroLAN Transport provides flat rate non-distance sensitive transport for DS1 bandwidth on fiber optic rings. The rate element associated with MetroLAN is a monthly recurring charge as set forth in 5.7.7(B).

Advanced data services include Telephone Company provided frame relay services, switched multi-megabit services, Internet Protocol services, LAN Extension Services and ATM-cell relay services. Connections to advanced data services are provided by the Telephone Company where such connections are technically and operationally feasible, as determined by the Telephone Company.

© 2022 Frontier Communications Parent, Inc. All rights reserved.

5 SPECIAL ACCESS (Cont'd)

5.1 General (Cont'd)

5.1.1 Rate Elements (Cont'd)

(B) Special Transport (Cont'd)

(2) Special Transport may be used in conjunction with Switched Access* for the purpose of provisioning Originating Only, Terminating Only or Combined Originating/Terminating Access as set forth in 4.2.5(V). Special Transport employed in this manner provides the FIA for the closed-end of the services between the wire center serving the end user's CDL where WATS Serving Office functions are not available and the WATS Serving Office.

When the necessary WATS Serving Office functions are not provided at the wire center which serves the end user's CDL, the Telephone Company will designate the wire center where the WATS Serving Office functions are available.

(C) Special Access Line (SAL)

(1) A Special Access Line provides the transmission facilities to a Customer Designated Location (CDL) or the facilities between a CDL and the serving wire center. This rate element varies by type of capability (i.e., analog or digital) and type of facility (e.g., Voiceband, Digital Data Service, etc.).

When a Voiceband Special Access service is ordered to be terminated at a customer's designated Interexchange Carrier's all-digital CDL which requires a minimum digital interface level of 1.544 Mbps, the Telephone Company will provide the required interface and assess the customer a Voiceband SAL, for the facility between the all-digital CDL and its serving wire center. All other appropriate charges apply in addition to the Voiceband SAL.

SAL rates for DS3 offerings vary with the level of capacity, number of services and whether the interface provided is electrical or optical.

Installation of E1/DS1/DS3 SALs is as set forth in 5.6.1(E)(3). The applicable rates are the nonrecurring charge and monthly rate set forth per E1/DS1/DS3 SAL installed.

* Special Transport for DS1 and DS3 Special Access, when used with Switched Access, is not available for arrangements between service areas listed under 5.2.7(H).

© 2022 Frontier Communications Parent, Inc. All rights reserved.

5 SPECIAL ACCESS (Cont'd)

5.1 General (Cont'd)

5.1.1 Rate Elements (Cont'd)

(C) Special Access Line (SAL) (Cont'd)

(1) (Cont'd)

The selection of a Terminating Option, as defined in 5.3, is required for terminating the network portion of a Special Access Line at a CDL. Terminating Options provide a clearly delineated interface which facilitates the design, isolation, and testing of the Special Access. For DS3/DS3C Special Access, the customer may specify either an electrical or optical interface as set forth in 3.1.1(F).

E1 service is provided only with an electrical interface, and is subject to the availability of suitable fiber optic facilities between the CDL and the serving wire center.

One Special Access Line charge applies per CDL at which the facility is terminated. This charge applies even if the facilities to the CDL do not transit a serving wire center; this charge also applies if the CDL and the serving wire center are co-located in a Telephone Company building. Connection to Telephone Company provided DS1 or DS3 SALs within a serving wire center for customers with EIS will require a Special Access Cross Connect arrangement as described in 5.1.1. The Special Access Line charge used with a Switching Interface, as set forth in (2) below, is applicable only for the transmission facilities between the end user's CDL and the serving wire center of that location.

(2) A Special Access Line may be provided in conjunction with FGA, FGB, FGC, FGD, BSA-A, BSA-B, BSA-C and BSA-D Switched Access Service for the purpose of Originating Only, Terminating Only or Combined Originating and Terminating Access as set forth in 4.2.1 and 4.2.2. A Switching Interface is required for the provision of this service as set forth in 4.2.5(V). The Special Access Line provides the closed-end of the dedicated facilities between an end user's CDL and its serving wire center. This serving wire center may or may not be a WATS Serving Office. In those instances when the serving wire center is not a WATS Serving Office Special Transport is applicable as set forth in 5.1.1(B) to the nearest Telephone Company WATS Serving Office.

The Switched Access used in conjunction with the Special Access Line provides various standard switching functionalities and optional arrangements as set forth in Section 4.2.5(V).

© 2022 Frontier Communications Parent, Inc. All rights reserved.

5 SPECIAL ACCESS (Cont'd)

5.1 General (Cont'd)

5.1.1 Rate Elements (Cont'd)

(C) Special Access Line (SAL) (Cont'd)

(2) All Special Access Lines used with a Switching Interface are:

- provided with dial pulse address signaling or Dual Tone Multifrequency (DTMF) address signaling and either loop start or ground start supervisory signaling. The type of signaling is the option of the customer.
- available as either a two-wire or four-wire Voiceband Special Access Service (i.e., 300-3000 Hz bandwidth). Each transmission path is provided at the option of the customer with transmission specifications as described in Section 7000 of the GTE Technical Interface Reference Manual.

All rules and regulations pertaining to Special Access are applicable to Special Access Lines used with a Switching Interface. Rates and Charges are found in 5.7.5 for two-wire and four-wire Voiceband Special Access Lines.

A customer may also order high capacity facilities from an end user's CDL to a Telephone Company Hub for the purpose of originating or terminating Special Access Lines used with a Switching Interface. High capacity to voice multiplexing will be required at the Hub. The customer will be required to submit an ASR for the high capacity facility and voice multiplexing. The customer will also be required to submit an ASR(s) for the individual Voiceband SALs specifying the channel facility assignment (CFA) for each service. This Hub may or may not be a WATS Serving Office. In those instances when the Hub is not a WATS Serving Office, Voiceband Special Transport is applicable as set forth in 5.1.1(B), for each individual Special Access Line used with a Switching Interface to the Telephone Company designated WATS Serving Office.

Special Access Cross Connect for EIS

The Special Access Cross Connect charge provides the communications path between Telephone Company provided DS0 (DDS operating at 64Kbps or Fractional T1 bandwidths), DS1 or DS3 Special Access Lines or Special Access Transport and a customer's transmission equipment and facilities where the customer is provided EIS as defined in Section 17. The Special Access Cross Connect charge may also provide the communications path between a customer's transmission equipment and facilities where the customer is provided EIS and EIS arrangements of another customer via Dedicated Transport Service as set forth in Section 18.1. The Special Access Cross Connect is available as DS0, DS1, or DS3 connections. The DS0 Cross Connect can accommodate 64Kbps DDS and Fractional T1 bandwidths of 128 Kbps, 256Kbps and 384Kbps. The Cross Connect arrangement may be connected directly to Telephone Company provided 64Kbps DDS or Fractional T1/DS0, DS1 or DS3 services or to a Telephone Company provided 64Kbps DDS or Fractional T1/DS0, DS1, or DS3 multiplexing arrangement. The Cross Connect charge applies per DS0 (64Kbps), DS1, or DS3 connection.

© 2022 Frontier Communications Parent, Inc. All rights reserved.

5 SPECIAL ACCESS (Cont'd)

5.1 General (Cont'd)

5.1.1 Rate Elements (Cont'd)

Special Access Cross Connect for EIS (Cont'd)

The Special Access Cross Connect charge provides the communications path between Telephone Company provided DS0 (DDS operating at 64Kbps or Fractional T1 bandwidths), DS1 or DS3 Special Access Lines or Special Access Transport and a customer's transmission equipment and facilities where the customer is provided EIS as defined in Section 17. The Special Access Cross Connect charge may also provide the communications path between a customer's transmission equipment and facilities where the customer is provided EIS and EIS arrangements of another customer via Dedicated Transport Service as set forth in Section 18.1. The Special Access Cross Connect is available as DS0, DS1, or DS3 connections. The DS0 Cross Connect can accommodate 64Kbps DDS and Fractional T1 bandwidths of 128 Kbps, 256Kbps and 384Kbps. The Cross Connect arrangement may be connected directly to Telephone Company provided 64Kbps DDS or Fractional T1/DS0, DS1 or DS3 services or to a Telephone Company provided 64Kbps DDS or Fractional T1/DS0, DS1, or DS3 multiplexing arrangement. The Cross Connect charge applies per DS0 (64Kbps), DS1, or DS3 connection.

Fractional T1 service can be designed to carry various DS0 combinations. Therefore, the DS0 Cross Connect charge for Fractional T1 will be assessed as follows:

- 128 Kbps: 2 DS0 Cross Connects
- 256 Kbps: 4 DS0 Cross Connects
- 384 Kbps: 6 DS0 Cross Connects

In addition to the Special Access Cross Connect arrangements described herein, Optical Facility Terminations are available as described in Section 18.2.

Rates for DS0, DS1, and DS3 Cross Connect arrangements listed in Section 5.10 and rates for Optical Facility Terminations listed in Section 18.2(E) will apply in addition to the other rates and charges as specified in Section 17.

(E) Supplemental Features

Supplemental Features may be added to a Special Access circuit to improve its quality or utility to meet specific communications requirements. These are not necessarily identifiable with specific facilities, but rather represent the end result in terms of performance characteristics which may be obtained. These characteristics may be obtained by using various combinations of facilities. Although the facilities necessary to perform a specified function may be installed at various locations along the path of the Special Access circuit, including the CDL, it will be provided for as a single rate element.

Examples of Supplemental Features that are available include, but are not limited to, bridging and conditioning. Each Supplemental Feature is described in 5.4, and rates are set forth in 5.7.

© 2022 Frontier Communications Parent, Inc. All rights reserved.

5 SPECIAL ACCESS (Cont'd)

5.1 General (Cont'd)

5.1.1 Rate Elements (Cont'd)

(F) Multiplexing Arrangements

Multiplexing provides for arrangements to convert a single higher capacity or bandwidth circuit for bulk transport to several lower capacity or bandwidth circuits. Multiplexing is only available at a Telephone Company designated Hub Wire Center arranged for multiplexing. All types of multiplexing may not be available at each Hub Wire Center. Refer to Section 5.6.6 for a description of Hub Wire Center. Descriptions for each type of multiplexing arrangements are provided in 5.5 following, and rates are set forth in 5.7 following.

(G) Special Transport Termination

(1) DS1, E1 and DS3 Service

The Special Transport Termination rate element as set forth in 5.7, applies only to DS1, E1, Individual DS3 and System DS3 offerings and is in addition to the Special Transport rate element. Special Transport Termination provides the equipment and arrangements necessary to terminate the Special Transport facility at a serving wire center. One Special Transport Termination charge applies for the termination of each end of a Special Transport facility for E1, DS1 and DS3 (Individual and Systems) offerings.

(2) Fractional T1 Service (FT1)

For Fractional T1 Service, Special Transport Termination must be ordered as Fractional Special Transport Termination in the same grouping (N x 56 Kbps or N x 64 Kbps where N = 2, 4, or 6) as the associated FT1 SALs.

© 2022 Frontier Communications Parent, Inc. All rights reserved.

5 SPECIAL ACCESS (Cont'd)

5.1 General (Cont'd)

5.1.2 Special Access Configurations

There are two types of facility configurations over which Special Access Services are provided – two-point and multipoint.

(A) Two-point Service

A two-point configuration is a circuit which is provided to connect two CDLs, either directly connected or through a Hub Wire Center where multiplexing functions are performed, or a CDL and a WATS Serving Office.

All Special Access offerings may be provided as a two-point configuration.

With the exception of Temporary Videoband Service, applicable rate elements are:

- Special Access Lines
- Special Transport (when applicable)
- Special Transport Termination (when applicable)
- Supplemental Features (when applicable)
- Multiplexing Arrangements (when applicable)

The following diagram depicts a typical two-point service connecting two CDLs. The service is provided with the supplemental feature of Type C Conditioning:

```
CDL                    SWC                    SWC                    CDL
M                      |  |                   |  |                    M
:<————————SAL————————> └──┘ <————————ST————————> └──┘ <————————SAL————————>:
:<————————————————————————TYPE C CONDITIONING————————————————————————>:
```

SAL - Special Access Line
ST - Special Transport
SWC - Serving Wire Center
CDL - Customer Designated Location

Applicable rate elements are:
- Special Access Line (2 applicable)
- Special Transport (per airline mile between SWCs)
- Supplemental Feature of Type C Conditioning (2 applicable)

In addition, a Special Access Surcharge, as set forth in 5.6.9 following, and a Message Station Equipment Recovery Charge, as set forth in 5.6.10 following may be applicable.

© 2022 Frontier Communications Parent, Inc. All rights reserved.

5 SPECIAL ACCESS (Cont'd)

5.1 General (Cont'd)

5.1.2 Special Access Configurations (Cont'd)

(B) Multipoint Service

A multipoint configuration is a circuit that is provided to connect threeor more CDLs through a Telephone Company Hub Wire Center.

Only Voiceband, Program Audio, Digital Data Service facilities,andMiscellaneous Services where so designated, will be provided asmultipoint configurations. There is no limitation on the number of mid-links, but the use of more than three mid-links in tandem may degradethe quality of the multipoint facilities. A mid-link is defined as the Special Transport facilities between Hub Wire Centers where the circuit is bridged and/or where circuit switching devices, such as loop transfer arrangement, are located.

Multipoint service is provided in the following manner:

(1) Special Access Line per CDL to their respective serving wire centers.

(2) Special Transport between serving wire centers associated with the CDLs and the Hub Wire Center.

(3) Special Transport between Hub Wire Centers.

(4) Supplemental Features: Bridging equipment for each bridging location and other Supplemental Features when applicable.

(5) (Reserved for Future Use)

(6) Multiplexing Arrangements when applicable.

The following diagram depicts a multipoint service connecting four CDLs via two customer specified Hub Wire Centers:

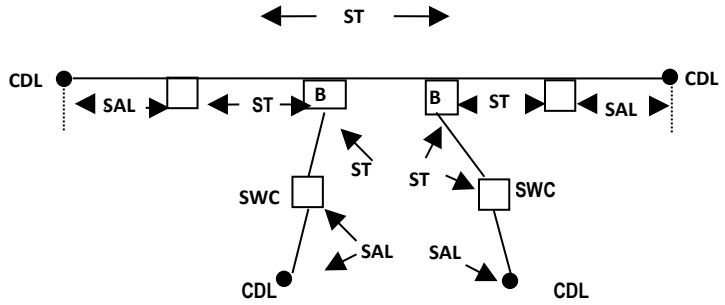

SAL - Special Access Line
ST - Special Transport
SWC - Serving Wire Center
CDL - Customer Designated Location
HWC - Hub Wire Center
B - Bridging

© 2022 Frontier Communications Parent, Inc. All rights reserved.

5 SPECIAL ACCESS (Cont'd)

5.1 General (Cont'd)

5.1.2 Special Access Configurations (Cont'd)

(B) Multipoint Service (Cont'd)

Applicable rate elements are:
- Special Access Lines (4 applicable)
- pecial Transport (5 segments, per airline between SWCs and HWCs)
- Bridging (6 applicable, one per bridge port)

In addition, the Special Access Surcharge, as set forth in 5.6.9 following, and the Message Station Equipment Recovery Charge, as set forth in 5.6.10 may be applicable.

5.1.3 Special Facilities Routing

A customer may request that the facilities used to provide Special Access Service be specially routed. The regulations, rates and charges for Special Facilities Routing (i.e., Avoidance, Diversity and Cable-Only) are as set forth in Section 9 following.

5.1.4 Design Layout Report

The Telephone Company will provide to the customer the makeup of the Special Access provided under this Guide to aid the customer in designing its overall service. This information will be provided in the form of a Design Layout Report and will include the following:

Cable gauge, length and loading.
Makeup (e.g., T-Carrier, two-wire, four-wire, etc.)
Specific pair of circuit assignment at the customer designated location.

The Design Layout Report will be provided to the customer within fourteen working days from the ASR Date. Updated reports will be reissued within fourteen working days whenever facilities provided to the customer are materially changed. Both the initial and updated Design Layout Reports will be provided to the customer at no charge.

5.1.5 Acceptance Testing

At the time of installation, the following test parameters apply:

(A) For Voiceband services, acceptance testing will include tests for loss, 3-tone slope, DC continuity, operational signaling, C-notched noise, and C-message noise.

When the Interface Arrangement provides a four-wire voice transmission facility and the point of termination provides two-wire voice transmission (i.e., there is a four-wire to two-wire conversion at the point of termination) balance tests are also included in acceptance testing. When performing installation and acceptance testing, the Telephone Company will test the access service within the LATA.

On four-wire and effective four-wire circuits where the Network Channel Terminating Equipment (NCTE) has the capability of being remotely aligned, the Telephone Company may perform acceptance testing without a Telephone Company technician at the customer's premise. Should the customer request a technician be present at the customer's premise, additional charges will apply as set forth in Section 6.2(C). The applicable rates are in Section 6.2(G).

© 2022 Frontier Communications Parent, Inc. All rights reserved.

5 SPECIAL ACCESS (Cont'd)

5.1 General (Cont'd)

5.1.5 Acceptance Testing (Cont'd)

(A) (Cont'd)

If the NCTE at the customer's premise does not have the capability of being aligned remotely, the additional charges will not apply. The Telephone Company will determine the type of NCTE placed at a customer's premise.

(B) For other analog services (i.e., Program Audio, Video, Wideband Analog and Wideband Data Services) and for digital services (i.e., Digital Data Services and High Capacity Digital Services), acceptance testing will include tests for the parameters applicable to the service as set forth in Section 7000 of the GTE Technical Interface Reference Manual for each of these services.

When the customer requests the performance of additional cooperative tests which are not required to meet these specified performance parameters, charges as set forth in 6.6 (B) following will apply. All test results will be made available to the customer upon request.

If acceptance tests are not started within 15 minutes after pre-service tests have been completed and the customer has been notified by the Telephone Company, additional charges may apply, as set forth in 6.2 following, unless the delay is caused by the Telephone Company.

5.1.6 Ordering Conditions

Ordering conditions are set forth in detail in Section 3 preceding. Also included in that section, are other charges which may be associated with ordering Special Access (e.g., Service Date Change Charges, Cancellation Charges, etc.).

(A) Determination of Jurisdiction of Mixed Use Special Access Lines

When mixed interstate and intrastate Special Access Service is ordered, the jurisdiction will be determined as follows:

1. If the customer's estimate of the interstate traffic on the physically intrastate line involved constitutes 10% or less of the total traffic on that line, the line will be ordered and provided in accordance with the applicable rules and regulations of the appropriate intrastate tariff.

2. If the customer's estimate of the interstate traffic on the physically intrastate line involved constitutes more than 10% of the total traffic on that line, the line will be ordered and provided in accordance with the applicable rules and regulations of this Guide.

© 2022 Frontier Communications Parent, Inc. All rights reserved.

5 SPECIAL ACCESS (Cont'd)

5.1 General (Cont'd)

5.1.6 Ordering Conditions (Cont'd)

(A) Determination of Jurisdiction of Mixed Use Special Access Lines (Cont'd)

4. Lines in service on the effective date of this Guide certified to be jurisdictionally intrastate and having a maximum termination liability associated with them will not be assessed the termination liability. The customer must submit an ASR for each line changing jurisdiction no later than 90 days from the effective date of this Guide to have the termination liability waived.

(B) Special Access Jurisdictional Verification

If a billing dispute arises or a regulatory commission questions the customer's certification of the jurisdiction of the line the Telephone Company will ask the customer to provide the data used to determine the jurisdiction. The customer shall supply the data within 30 days of the Telephone Company's request. The customer shall keep records of system design and functions from which the jurisdiction can be ascertained and upon request of the Telephone Company make the records available for inspection as reasonably necessary for purposes of verification of the jurisdiction of the service

© 2022 Frontier Communications Parent, Inc. All rights reserved.

5 SPECIAL ACCESS (Cont'd)

5.2 Description of Special Access

There are seven generic types of Special Access offerings. They are:

-Voiceband
-Program Audio
-Videoband
-Wideband Analog
-Wideband Data *
-High Capacity Digital
-Digital Data Service

Each type has its own characteristics, and are subdivided by one or more of the following:

-Transmission specifications
-Bandwidth
-Speed (i.e., bit rate)
-Spectrum

The Special Access offerings described below are comprised of a combination of the rate elements described in 5.1.1. The following descriptions indicate the most effective use for each facility. Customer use for purposes other than those indicated is limited only to the extent that such use must not harm the network. Further, the Telephone Company does not guarantee transmission performance beyond the parameters identified in the descriptions.

The transmission performance characteristics of each Special Access offering are stated in Section 7000 of the GTE Technical Interface Reference Manual. The Telephone Company will maintain existing transmission specifications on services installed prior to the effective date of this Guide, except that existing services with performance specifications exceeding the standards in the GTE Technical Interface Reference Manual will be maintained at the performance level specified in the manual. Where transmission performance characteristics are required other than those as stated in Section 7000 of the GTE Technical Interface Reference Manual, the Telephone Company will review, and where technically feasible, will develop rates and charges for the additional costs associated with provisioning the parameters. These rates and charges will be filed on an individual case basis in Section 5.9 and will apply in addition to all other applicable rates and charges.

The customer also has the option of ordering Voiceband and analog and digital high capacity facilities to a Telephone Company Hub for multiplexing to individual channels of a lower capacity or bandwidth. Descriptions of the types of multiplexing available at the Hubs, as well as the number of individual channels which may be derived from each type of facility, are set forth in 5.5. Additionally, the customer may specify supplemental features for the individual channels derived from the facility to further tailor the channel to meet specific communications requirements. Descriptions of the supplemental features available are set forth in 5.4.

For example, a customer may order a DS3 from a CDL to a Telephone Company Hub for multiplexing to 28 DS1 channels. The DS1 channels may be further multiplexed at the same or a different Hub to Voiceband channels or may be extended to other CDLs. Optional features may be added to either the DS1 or the Voiceband channels.

* Limited to those offerings in service as of December 29, 1991.

© 2022 Frontier Communications Parent, Inc. All rights reserved.

5 SPECIAL ACCESS (Cont'd)

5.2 Description of Special Access (Cont'd)

5.2.1 Voiceband

(A) Two-Wire Voiceband Facility

These facilities are unconditioned and are capable of transmitting voice or data signals within the frequency spectrum of approximately 300 Hz to 3000 Hz. These facilities are furnished on a two-point or multipoint basis and may be terminated two-wire or four-wire at the point of termination. They permit the simultaneous transmission of information in both directions over a circuit, but it is not possible to ensure independent information transmission in both directions. Supplemental features may be added, at applicable charges, to enhance the operational capabilities of these facilities.

(B) Four-Wire Voiceband Facility

These facilities are unconditioned and are capable of transmitting voice or data signals within the frequency spectrum of approximately 300 Hz to 3000 Hz. The facilities are furnished on a two-point or multipoint basis and may be terminated two-wire or four-wire at the point of termination. When terminated four-wire, they permit simultaneous independent transmission of information in both directions over a circuit. However, when terminated two-wire, simultaneous independent transmission cannot be supported. Supplemental features may be added, at applicable charges, to enhance the operational capabilities of these facilities.

© 2022 Frontier Communications Parent, Inc. All rights reserved.

5 SPECIAL ACCESS (Cont'd)

5.2 Description of Special Access (Cont'd)

5.2.2 (Reserved for Future Use)

5.2.3 Program Audio

These facilities are arranged and provided for the transmission of audio to be broadcast or which is to be used in connection with loudspeakers, wired music, closed circuit or recordings. Audio facilities are furnished for transmission in one direction. Audio facilities may be provided on a two-point or multipoint basis.

Program audio facilities are provided on either a full-time or part-time basis. The minimum periods for full-time and part-time service are set forth in Section 3.2.4. When a part-time program audio service is provided for ten or more consecutive days, it will be treated as a full-time service and rated accordingly. In no event will the charge for continuous part-time program audio exceed the amount that would have been charged in the same time period for full-time program audio facilities.

Listed below are the types of Program Audio facilities that are offered under this Guide.

(A) 200 to 3500 Hz

Facilities are generally acceptable for speech quality programming and are subject to use over limited distance due to transmission factors.

(B) 100 to 5000 Hz

Facilities are generally acceptable for music and provide good quality speech programming.

(C) 50 to 8000 Hz

Facilities for the provision of high fidelity music transmission.

50 to 15000 Hz

Facilities for the provision of high fidelity music transmission. Two such facilities may be conditioned, at applicable charges, for stereo operation.

5.2.4 Video Digital Transport Service

(A) General

Video Digital Transport Service facilities are arranged and provided for the transmission of television to be broadcast or used in connection with viewing, recording, managing or editing of moving pictures or video frames of information.

The Telephone Company will have no control over, nor be responsible for the video program signal generation or program content connected by the customer to the transmission path provided by the Telephone Company.

The Telephone Company will supply and maintain network interface equipment at the customer location as part of this offering. The customer will supply appropriate terminal equipment beyond the demarcation point which complies with the required specifications to interface with the Telephone Company's terminal interface. The Telephone Company is not responsible for the quality of the video signal originating or terminating in customer provided equipment.

© 2022 Frontier Communications Parent, Inc. All rights reserved.

5 SPECIAL ACCESS (Cont'd)

5.2 Description of Special Access (Cont'd)

5.2.4 Video Digital Transport Service (Cont'd)

(A) General (Cont'd)

There are two categories of Video Digital Transport Service: Type I (Temporary Facility) and Type II (Permanent Facility).

Video Digital Transport Service Type I facilities are furnished for two point undirectional transmission or, when run through the Telephone Company's hub, multipoint unidirectional capabilities are available and Video Digital Transport Service Type II facilities are furnished for two-point or multipoint undirectional or bidirectional transmission of United States 525 line/60 field standard monochrome and National Television Systems Committee (NTSC) color television baseband video signals and the associated audio signals.

(B) Video Digital Transport Service I (Temporary Facility)

Video Digital Transport Service - Type I are provided on a full-time or part-time (temporary) basis. The minimum periods are set forth in 3.2.4 and 3.2.5 preceding. The monthly rates and nonrecurring charges for full-time Video Digital Transport Service - Type I will be developed on an Individual Case Basis. The hourly rates and nonrecurring charges for temporary service are those set forth in Section 5.7.4(A).

There is a maximum monthly charge that may be assessed to any temporary Video Digital Transport Service Type I, as described in Section 5.6.1(C).

Technician Standby is a nonoptional arrangement furnished only in conjunction with temporary Video Digital Transport Service - Type I. Technician Standby provides for Telephone Company monitoring of the temporary video broadcast to ensure satisfactory transmission. The Telephone Company will determine the location of the video technician. At the option of the customer, additional technicians will be made available during the temporary broadcast; the customer will be assessed the Technician Standby charge, as set forth in Section 5.7.4(A), for each additional technician.

A customer may request (as an option) an active, alternate temporary Type I Video Digital Transport Service transmission path for use in the event that the primary service becomes inoperative. This is referred to as a "hot standby" facility. The charge for this additional service will be the nonrecurring charges and hourly rates set forth in Section 5.7.4(A) for Temporary Video Digital Transport Service - Type I Facilities. Technician Standby charges are not applicable to the "hot standby" facility.

© 2022 Frontier Communications Parent, Inc. All rights reserved.

5 SPECIAL ACCESS (Cont'd)

5.2 Description of Special Access (Cont'd)

5.2.4 Video Digital Transport Service (Cont'd)

(C) Video Digital Transport Service - Type II

Video Digital Transport Service Type II Service includes TV1-Analog, Up to 45 Mbps, and 270 Mbps# offerings.

Video Digital Transport Service - Type II/TV1-Analog is a video transport system for the transmission of broadcast quality video signals. These technical specifications are set forth below. Video Digital Transport Service - Type II is available to customers connected to the network via existing fiber optic or other compatible facilities. Customers requesting Video Digital Transport Service - Type II who are not served by compatible facilities may request the Telephone Company to provide such facilities in accordance with the Special Construction provisions set forth in Section 3.1.3 preceding.

Effective March 8, 2008, orders for new 270Mbps Bi-Directional Video Digital Transport Service – Type II subscribed to on a month-to-month arrangement, on a term commitment plan basis, or on a short duration - daily basis are no longer permitted. The Telephone Company will continue to provide 270 Mbps Bi-Directional Video Digital Transport Service – Type II pursuant to this Section 5 to customers currently subscribing to this service on a month-to-month arrangement or on a term commitment plan basis, or for any future order for 270 Mbps Bi-Directional Video Digital Transport Service – Type II subscribed to on a month-to-month arrangement or term commitment plan basis that is placed with the Telephone Company prior to March 8, 2008, (collectively, Existing 270 Mbps Bi-Directional Video Digital Transport Service – Type II) subject to the following conditions:

a. The Telephone Company will continue to provide Existing 270 Mbps Bi-Directional Video Digital Transport Service – Type II that is currently subscribed to a term commitment plan for an additional six (6) months beyond the expiration date of the customer's current term commitment plan, or until the customer replaces the Existing 270 Mbps Bi-Directional Video Digital Transport Service – Type II with a comparable Telephone Company provided service, or discontinues service, whichever comes first. Subject to availability of network facilities, moves, additions, and/or changes are permitted provided that such moves, additions and/or changes do not require a new term commitment plan or an extension to a term commitment plan.

b. The Telephone Company will continue to provide Existing 270 Mbps Bi-Directional Video Digital Transport Service – Type II that is currently subscribed to on a month-to-month basis until September 8, 2008, or until the customer replaces the Existing 270 Mbps Bi-Directional Video Digital Transport Service – Type II with a comparable Telephone Company provided service, or discontinues service, whichever comes first. Moves, additions, and/or changes are not permitted for customers subscribed on a month-to-month basis.

© 2022 Frontier Communications Parent, Inc. All rights reserved.

5 SPECIAL ACCESS (Cont'd)

5.2 Description of Special Access (Cont'd)

5.2.4 Video Digital Transport Service (Cont'd)

(C) Video Digital Transport Service - Type II (Cont'd)

The Telephone Company will provide technical support at its hub wire centers on a 24 hour, 7 days per week basis. This support will provide for the establishment, testing and termination of the facility transmission path from the customer location to the video carrier's location. The Telephone Company is authorized, on behalf of the customer, to take whatever action is appropriate to sustain a video transmission within the technical specifications.

TV1-Analog and 45 Mbps Video Digital Transport Service meet EIA/TIA 250-C specifications.

Refer to SMPTE 0259M-2008 for additional technical specifications associated with Video Digital Transport Service Type II - 270 Mbps.

270 Mbps Uni-Directional Video Digital Transport Service – Type II may be connected to a Telephone Company provided integrated optical service, where such connections are technically and operationally feasible, as determined by the Telephone Company. The 270 Mbps Uni-Directional Video Digital Transport Service – Type II DVL charge will not apply at the integrated optical service end of the circuit.

© 2022 Frontier Communications Parent, Inc. All rights reserved.

5 SPECIAL ACCESS (Cont'd)

5.2 Description of Special Access (Cont'd)

5.2.5 Wideband Analog

These facilities are two-point and are furnished between CDLs or between a CDL and a Telephone Company designated Hub Wire Center where multiplexing is offered. The three types of Wideband Analog facilities are:

(A) Group band facilities with a bandwidth from 60 kHz to 108 kHz for the transmission of a 12 circuit frequency division multiplexer (FDM) group.

(B) Supergroup band facilities with a bandwidth from 312 kHz to 552 kHz for the transmission of a 60 circuit FDM supergroup.

(C) Mastergroup band facilities with a bandwidth from 564 kHz to 3084 kHz for the transmission of a 600 circuit FDM mastergroup.

5.2.6 Wideband Data Service *

These analog facilities are arranged and furnished for two-point simultaneous two-way transmission of high speed data between two CDLs. These facilities are normally utilized for the following data speeds: 19.2 Kbps, 50 Kbps, 56 Kbps and 230.4 Kbps.

5.2.7 High Capacity Digital

These facilities are two-point and are furnished between CDLs or between a CDL and a Telephone Company designated Hub Wire Center where multiplexing is offered. High Capacity facilities may be used to provide Special Access Lines as set forth in 5.1.1(C)(2). A High Capacity to Voice multiplexing arrangement, as described in Section 5.5, is required at the Hub Wire Center. High Capacity DS1 and DS3 services may also be connected to customer transmission equipment and facilities where the customer is provided EIS as defined in Section 17.

(A) DS1 facilities provide for the transmission of isochronous bipolar serial data at a rate of 1.544 Mbps.

(B) DS1C facilities provide for the transmission of isochronous bipolar serial data at a rate of 3.152 Mbps.

(C) FT1 facilities are furnished for the transmission of isochronous bipolar serial data and are available at transmission rate groupings of N x 56 Kbps or N x 64 Kbps where N equals 2, 4, or 6. FT1 channels are contiguous within the network and can be used to create a wideband circuit using customer provided equipment. When N x 64 FT1 is ordered in conjunction with DS1 service for multiplexing purposes, the DS1 must have Clear Channel Capability as described in 5.8.5. FT1 Service at a rate of N x 64 Kbps will only be provided where Clear Channel Capability is available in the network. Where Clear Channel Capability is not available, N x 56 Kbps service can be provided in lieu of N x 64 Kbps.

* Limited to those services so equipped and in service as of December 29, 1991.

** High Capacity DS1 and DS3 services may be provided between service areas shown under 5.2.7(H), where facilities and conditions permit.

© 2022 Frontier Communications Parent, Inc. All rights reserved.

5 SPECIAL ACCESS (Cont'd)

5.2 Description of Special Access (Cont'd)

5.2.7 High Capacity Digital* (Cont'd)

FiberConnect is provided on fiber optic cable with an electrical interface and provides the customer with four (4) transmission channels of 1.544 Mbps each at the interface. FiberConnect service provides for the transmission of an isochronous serial data stream at a rate of 1.544 Mbps per transmission channel.

FiberConnect is offered only on a one for one protected basis between a CDL and its serving wire center. FiberConnect is not available with multipoint services. Special Transport between serving wire centers for FiberConnect is ordered as four (4) DS1s.

FiberConnect facilities are only available as an Optional Payment Plan (OPP) in accordance with 5.6.12 following.

(E) DS3 facilities provide for the transmission of isochronous bipolar serial data at a rate of 44.736 Mbps. The Telephone Company will provide either an interface with Telephone Company electronics (electrical) or without Telephone Company electronics (optical) at the option of the customer. Ordering conditions are set forth in 3.1.1(F). EIS is not available with DS3 services provided with an optical interface.

(F) DS3C facilities provide for the transmission of isochronous bipolar serial data at a rate of 89.472 Mbps. The Telephone Company will provide an optical interface with this service unless the service is provided via microwave, in which case an electro-magnetic interface is provided, or unless the customer requests an electrical interface. Ordering conditions are set forth in 3.1.1(F).

(G)# E1 facilities provide for the transmission of isochronous bipolar serial data at a rate of 2.048 Mbps. E1 facilities are only provided with an electrical interface.

Effective November 21, 2017, new subscriptions to High Capicity Digital E1 is no longer permitted. High Capicity Digital E1 customers subscribed as of November 21, 2017 may continue with their existing subscriptions. If at any time an existing customer terminates its Hight Capicity Digital E1, the customer may not re-subscribe to the plan.

* High Capacity DS1 and DS3 services may be provided between service areas shown under 5.2.7(H), where facilities and conditions permit.

© 2022 Frontier Communications Parent, Inc. All rights reserved.

5 SPECIAL ACCESS (Cont'd)

5.2 Description of Special Access (Cont'd)

5.2.7 High Capacity Digital* (Cont'd)

(H) Interzone@ Service Areas

Interzone Service provides the transmission facilities for DS1 and DS3 Special Access and DS1 and DS3 Optical Networking Access Services between two service areas within a state in association with two customer designated locations within different service areas. Optical Networking Access Services are available from Section 20. The associates regulations, rates and charges from Section 20 shall apply, as applicable, in addition to the rates and charges associated with the DS1 and DS3 Special Access rate elements. Special Transport and Special Transport Termination will be applied as set forth under 5.1.1(B) and 5.1.1(G).

Interzone Service is only available between the following service areas, where facilities and conditions permit.

State	Location "A"	CLLI Code	Location "Z"	CLLI Code
Illinois**	Bloomington	BLTNILXD	Rantoul	RNTLILXC
	Carbondale	CRDLILXE	Olney	OLNYILXE
	Dekalb	DKLBILXA	Freeport	FRPTILXA
	Olney	OLNYILXE	Rantoul	RNTLILXC
Indiana**	Elkhart	EKHTINXA	Fort Wayne	FTWYINXA
	Fort Wayne	FTWYINXA	Lafayette	LFYTINXA
	Jasper#	JSPRINXA	Terre Haute	TRRHINXA
Michigan**	Alma	ALMAMIXG	Muskegon	MSKGMIXK

* Available for DS1 and DS3 Special Access Service only
** Available for DS1 Special Access Service only
\# The Telephone Companies' FCC No. 6 Office

© 2022 Frontier Communications Parent, Inc. All rights reserved.

5 SPECIAL ACCESS (Cont'd)

5.2 Description of Special Access (Cont'd)

5.2.8 DS1/DS3/FiberConnect Enhanced Access Diversity (EAD)

Where the appropriate facility routes and/or capacity exists, the Telephone Company will provide, at the option of the customer, the following types of Enhanced Access Diversity for DS1/DS3/FiberConnect service.

EAD will be provided utilizing existing routes and facilities in the configurations described and illustrated in (A), (B) or (C). Other diverse routing arrangements may be provided if suitable facilities are available under the terms and conditions of Special Facilities Routing of FIA in Section 9.

EAD will be provided at rates and charges for the DS1/DS3/FiberConnect as set forth in 5.7.17.

(A) Common Wire Center, Separate and/or Common Facilities Diversity

Diversity from one CDL serving wire center to a second CDL serving wire center. This type of diversity is for interoffice transport only.

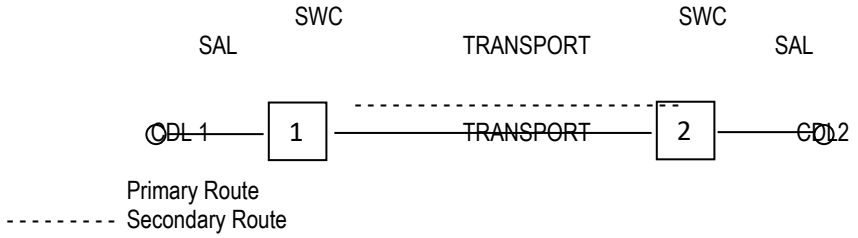

Two diverse circuits between serving wire centers. The SAL portion may be diverse if facilities are available.

(B) Common Wire Center, Separate Facilities Diversity

Diversity from one CDL to a second CDL using common serving wire centers, but on physically separate facilities. One circuit will be established between the CDLs and a second circuit will be established between the CDLs which may have common serving wire centers utilizing separate entrance facilities.

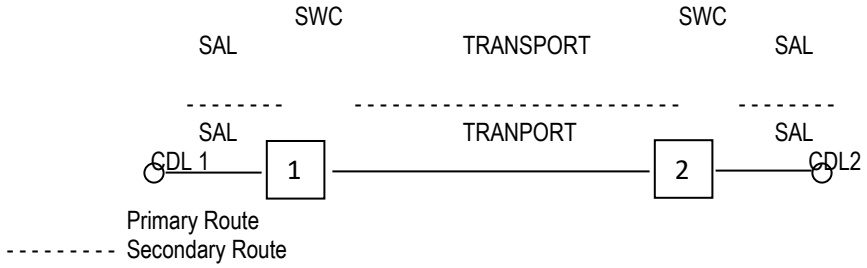

Two diverse circuits between serving wire centers. The SAL and Transport facilities must be separate, although the SWC's may be the same.

© 2022 Frontier Communications Parent, Inc. All rights reserved.

5 SPECIAL ACCESS (Cont'd)

5.2 Description of Special Access (Cont'd)

5.2.8 DS1/DS3/FiberConnect Enhanced Access Diversity (EAD)

(C) Separate Serving Wire Center Diversity

Diversity between two CDLs with no common serving wire centers. One circuit will be established between the CDLs and a second physically separate circuit will be established between CDLs.

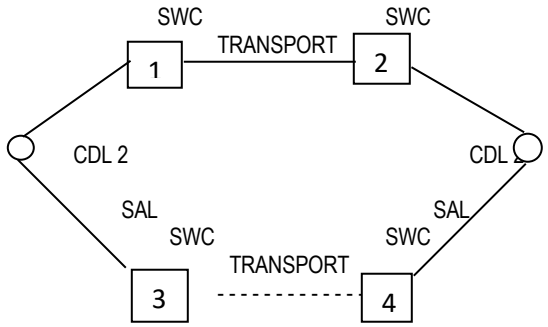

——————— Primary Route
- - - - - - - - - - - - Secondary Route

Two diverse circuits between serving wire centers. The SAL and Transport facilities must be entirely separate.

In the event that both the primary (standard route) and secondary (diverse route) service are simultaneously out of service for five or more minutes, the customer will be issued a credit allowance of $200.00 per service.* This credit allowance is in addition to the credit allowance in 2.8.1.1(A)(1). This credit allowance is in lieu of the credit allowance in 2.8.1.1(A)(3). The credit allowance will not apply if the failure occurs at a common serving wire center. The credit allowance will not exceed the monthly charge for the interrupted service.

A credit allowance will not be extended in accordance with conditions in 2.1.3(H) and 2.8.4(B) for the repair of Telephone Company owned facilities used to provide diverse routing.

The Telephone Company will provide the required routing information for each specially routed service to only the ordering customer. The customer may request this information when service is installed, prior to any subsequent changes in routing and on a recurring quarterly basis. Known diversity compromises will be included in the routing information report supplied to the customer.

When DS3 service is multiplexed, rates and charges will apply for each DS1 EAD service connecting to the multiplexer. Applicable rates and charges for the DS3 service will also apply if the customer orders EAD service for the DS3.

Rates for EAD appear in Section 5.7.17 and are in addition to all other rates and charges.

* Credit allowance provision expires at midnight February 18, 1994.

© 2022 Frontier Communications Parent, Inc. All rights reserved.

5 SPECIAL ACCESS (Cont'd)

5.2 Description of Special Access (Cont'd)

5.2.9 Digital Data Service (

Facilities for Digital Data Service are furnished for the simultaneous two-way transmission of synchronous data and are available at transmission speeds of: 2.4 Kbps, 4.8 Kbps, 9.6 Kbps, 19.2 Kbps, 56 Kbps or 64 Kbps. Digital Data facilities may be provided on a two-point or multipoint basis.

5.2.10 Bonded Digital Link Service

(A) Service Description

Bonded Digital Link Service provides connecting channels for the transmission of voice or data between an end user's local exchange service terminating at a digital cross connect facility and special access service provided by the Telephone Company within the same wire center or at another wire center within the same LATA.

Bonded Digital Link Service is comprised of Intra-office channels (channels within a single wire center) or Inter-office channels (channels between two wire centers) connecting the wire centers of the locations involved. The minimum transmission rate for the service is 64 kbps in a DSO channel. The Telephone Company will provide for the transmission of DS0 channels within a DS1 signal of the customer's (the end user) associated local exchange service from the digital cross connect facility in the customer's serving wire center to a 64 kbps channel of a customer's DS1 to Digital central office multiplexing arrangement within the same wire center or in a different wire center. The total number of DS0s on a Bonded Digital Link Service channel may not exceed the total capacity of the DS1 or equivalent service to which it is connected.

At the customer's option, the Telephone Company will bond contiguous DS0 channels in order to provide higher data rates. The following data rates are available:

- 64 kbps; 1 DS0 equivalent channel
- 128 kbps; 2 DSO equivalent channel
- 256 kbps; 4 bonded equivalent DS0s
- 384kbps; 6 bonded equivalent DS0s
- 512 kbps; 8 bonded equivalent DS0s
- 768 kbps; 12 bonded equivalent DS0s

For the transmission of the Bonded Digital Link channels, the Telephone Company assumes responsibility for the routing of the customer's DS0 and bonded DS0 circuits over the Telephone Company's interoffice network in order to maximize network efficiencies and to optimize economic efficiencies.

© 2022 Frontier Communications Parent, Inc. All rights reserved.

5 SPECIAL ACCESS (Cont'd)

5.2 Description of Special Access (Cont'd)

5.2.10 Bonded Digital Link Service (Cont'd)

(B) Terms and Conditions

(1) Bonded Digital Link Service is available within or between wire centers where suitable digital cross-connect technology exists to perform DS1 to DS0 multiplexing functions. Those locations (wire centers) are set forth in NATIONAL EXCHANGE CARRIER ASSOCIATION, INC. TARIFF F.C.C. NO. 4.

(2) The service may only be used for connection from a wire center with a digital hubbing arrangement to a DS1 special access service capable of assignment to compatible DS0 channels. The customer or its authorized representatives must designate the DS0 channels on the special access service connected to this service. Data rates above 64 kbps require contiguous DS0 channel assignments. Connection to services other than special access service is prohibited.

(3) Bonded Digital Link Service is provided with a one-year minimum service period. If service is disconnected prior to satisfying the minimum service period (i.e., within the first twelve months), minimum period charges apply. The minimum one-year period and minimum period charges do not apply if the rates have increased during the one-year period. The minimum period charge is equal to 100 % of the monthly rate from the date of disconnection through the balance of the first twelve months of service.

(4) This service is used for connectivity within or between wire centers. The rates and charges for Bonded Digital Link Service apply as a flat rate per DS0 equivalent channel.

(5) Credit for an interruption of Bonded Digital Link Service is subject to the basic credit allowance set forth for Special Access services as set forth in Section 2.8.1.1 preceding.

(6) Bonded Digital Link Service is provided according to service date intervals as set forth in Section 3.2.1 preceding.

(7) The rates and charges for Bonded Digital Link Service apply per DS0 equivalent channel (64 kbps). The customer is assessed either an Intra-office or an Inter-office Channel Charge for each DS0. Rates and charges are set forth in 5.7.5.1 following.

© 2022 Frontier Communications Parent, Inc. All rights reserved.

SPECIAL ACCESS (Cont'd)

5.2 Description of Special Access (Cont'd)

5.2.11 Miscellaneous Special Access Services

A description of each service provided under Miscellaneous Special Access Services, along with the rates is set forth in 5.8 following. Other Special Access rate elements may apply in addition to those found in 5.8.

© 2022 Frontier Communications Parent, Inc. All rights reserved.

5 SPECIAL ACCESS (Cont'd)

5.3 Description of Terminating Options

Terminating Options provide a clearly delineated interface between Telephone Company and customer facilities at the point of termination at the CDL. Terminating Options facilitate the design, isolation, and testing of the Special Access. The description of each Terminating Option defines the most effective use of the Terminating Option. The technical parameters of each type of associated interface are set forth in Section 7000 of the GTE Technical Interface Reference Manual. Although a customer is not restricted from alternate applications, except where such application is harmful to the network, the Telephone Company cannot guarantee technical performance for other than the applications stated below. Terminating Options are nonchargeable.

5.3.1 Narrowband

(A) 0 to 75 Baud Type 1

Provides standard open/closed 20 or 62 Ma energized interface to customer terminal equipment and converts customer terminal equipment signals to voice frequency signaling for transmission over two-wire or four-wire voiceband network facilities suitable for voice grade to narrowband multiplexing. This terminating option is obsolete and is limited to those circuits so equipped and in service as of November 3, 1990.

(B) 0 to 75 Baud Type 2

Provides two-wire or four-wire metallic interface for customer or Telephone Company energized circuits. Telephone Company energized circuits are only available in conjunction with voice grade to narrowband multiplexing. This option does not guarantee dc current operation over special transport facilities. This terminating option is obsolete and is limited to those circuits so equipped and in service as of November 3, 1990.

(C) 0 to 150 Baud

Provides standard RS-232C interface to customer terminal equipment and converts customer terminal equipment signals to voice frequency signaling for transmission over two-wire or four-wire voiceband facilities. This terminating option is obsolete and is limited to those circuits so equipped and in service as of November 3, 1990.

5.3.2 Voice Grade

(A) Two-Wire Voice Grade, Non-Data, Without Signaling

This option provides a two-wire interface to a customer and terminates an effective two-wire facility furnished for voice transmission only. Customer provided signaling must be limited to tones in the voice band. Customer provided voiceband signaling equipment must limit transmission power to 0.0 dBm peak and -13 dBm average power over a three-second period.

(B) Four-Wire Voice Grade, Non-Data, Without Signaling

This option provides a four-wire interface to the customer terminal equipment and terminates an effective four-wire facility furnished for voice transmission only. Customer provided signaling must be limited to tones in the voiceband. Customer provided voice band signaling equipment must limit transmission power to 0.0 dBm peak and -13 dBm average power over a three-second period.

© 2022 Frontier Communications Parent, Inc. All rights reserved.

5 SPECIAL ACCESS (Cont'd)

5.3 Description of Terminating Options (Cont'd)

5.3.2 Voice Grade (Cont'd)

(C) Voice Grade Data Termination

This option provides a two-wire or four-wire transmission interface to a customer's private line data modem and terminates an effective four-wire facility furnished for voiceband data transmission.

Two-Wire Voice Grade Station Connecting Facility Termination

This option provides a means to terminate an effective two-wire facility or an effective four-wire facility with a two-wire customer interface on a telephone, key system, PBX, ACD, or similar equipment. his option is normally used to terminate facilities that furnish foreign central office service, the station end of PBX off premises service, or private switched service network access lines. The option provides both the transmission and loop signaling functions normally associated with these services. The option is also used to terminate facilities arranged with automatic ringdown signaling. This option provides the loop and ringdown signaling with the facility.

(E) Four-Wire Voice Grade Station Connecting Facility Termination

A terminating option similar to preceding used to terminate effective four-wire foreign central office service. The option provides a four-wire transmission interface to the customer terminal equipment and the loop signaling function normally associated with these services. This option provides the loop and ringdown signaling with the facility.

(F) Two-Wire Station Connecting Facility Termination for the Open End of an Off Premises PBX Extension

Terminating options are available depending on the signaling range of the PBX (or similar system) as defined in Part 68 of the FCC Rules and Regulations. Type 1 is an option requiring range extension equipment at the CDL. Type 2 is an option with no range extension equipment at the CDL. If needed, the loop signaling range equipment for Type 1 must be specifically specified, see Section 5.4.4 following for available arrangements.

(G) Dial Repeating Tie Trunk Termination

Two network terminating options are provided for terminating effective four-wire transmission facilities used to furnish dial repeating tie trunk services. These options are described in terms of the interface they provide to a PBX (or similar system).

(1) A Type I tie line termination provides the customer with a two-wire transmission interface and includes either two-wire or four-wire E&M type signaling. Transmission and signaling interface options available are described in Part 68 of the FCC Rules and Regulations. This option provides the E&M type signaling with the facility.

© 2022 Frontier Communications Parent, Inc. All rights reserved.

5 SPECIAL ACCESS (Cont'd)

5.3 Description of Terminating Options (Cont'd)

5.3.2 Voice Grade (Cont'd)

(G) Dial Repeating Tie Trunk Termination (Cont'd)

(2) A Type III tie line termination provides the customer with a four-wire transmission interface and includes either two-wire or four-wire E&M type signaling. Transmission and signaling options available are described in Part 68 of the FCC Rules and Regulations. This option provides the E&M signaling with the facility.

5.3.3 Program Audio

(A) 200 to 3500 Hz

Provides standard program audio interface levels and impedance matching to two-wire network facilities.

(B) 100 to 5000 Hz, 50 to 8000 Hz, and 50 to 15000 Hz

Provides standard program audio interface levels, circuit equalization and impedance matching to two-wire network facilities.

5.3.4 Video Digital Transport Service

Video Digital Transport Service TV1-Analog and 45 Mbps service are provided via one signal (combined video and audio). They include a one-way or two way transmission of standard 525 lines/60 fields monochrome or NTSC color video signal, and one or two associated 15 kHz audio signals. Additional audio channels are available.

Video Digital Transport Service- 270 Mbps is provided via one noncompressed video signal complying with SMPTE259M. For 270 Mbps, audio is offered as an option in increments of two stereo channels.

5.3.5 Wideband Data Service *

(A) Provides a Wideband Data Service Special Access interface for use in providing two-way transmission of sequential synchronous or nonsynchronous data at rates of 19.2, 50 or 230.4 kbps; or sequential synchronous bipolar data signals at a rate of 56 kbps over four-wire facilities.

* Limited to those services so equipped and in service as of December 29, 1991.

© 2022 Frontier Communications Parent, Inc. All rights reserved.

5 SPECIAL ACCESS (Cont'd)

5.3 Description of Terminating Options (Cont'd)

5.3.6 High Capacity Digital

(A) High Capacity Digital DS1*

Provides a High Capacity Digital DS1 Special Access interface for use in providing simultaneous two-way transmission of isochronous bipolar serial data signals at the rate of 1.544 Mbps.

(B) High Capacity Digital DS1C

Provides a High Capacity Digital DS1C Special Access interface for use in providing simultaneous two-way transmission of isochronous bipolar serial data signals at the rate of 3.152 Mbps.

(C) Fractional T1 Service

Provides a DS1 Special Access interface for use in providing simultaneous two-way transmission of isochronous bipolar serial data signals and is limited to groupings of N x 56 Kbps or N X 64 Kbps where N equals 2, 4, or 6.

* High Capacity DS1 and DS3 services may be provided between service areas shown under 5.2.7(H), where facilities and conditions permit.

© 2022 Frontier Communications Parent, Inc. All rights reserved.

5 SPECIAL ACCESS (Cont'd)

5.3 Description of Terminating Options (Cont'd)

5.3.6 High Capacity Digital

FiberConnect Service

Provides a High Capacity Digital Special Access interface for use in providing simultaneous two-way transmission of isochronous bipolar serial data. The Telephone Company will provide an electrical interface. The electrical interface provides four (4) electrical channels at 1.544 Mbps each. Service will be provided on a one for one protected basis only.

(E) High Capacity Digital DS3*

Provides a High Capacity Digital DS3 Special Access interface for use in providing simultaneous two-way transmission of isochronous bipolar serial data signals at the rate of 44.736 Mbps. The Telephone Company will provide either an interface with Telephone Company electronics (electrical) or an interface without Telephone Company electronics (optical) as specified by the customer. EIS is not available with DS3 services provided with an optical interface. Ordering conditions are set forth in 3.1.1(F).

(F) High Capacity Digital DS3C

Provides a High Capacity Digital DS3C Special Access interface for use in providing simultaneous two-way transmission of isochronous bipolar serial data signals at the rate of 89.472 Mbps. The Telephone Company will provide an optical interface with this service unless the service is provided via microwave, in which case, an electromagnetic interface is provided, or unless the customer requests an electrical interface. Ordering conditions are set forth in 3.1.1(F).

* High Capacity DS1 and DS3 services may be provided between service areas shown under 5.2.7(H), where facilities and conditions permit.

© 2022 Frontier Communications Parent, Inc. All rights reserved.

5 SPECIAL ACCESS (Cont'd)

5.3 Description of Terminating Options (Cont'd)

5.3.6 High Capacity Digital (Cont'd)

(G) High Capacity Digital E1#

Provides a High Capacity Digital E1 Special Access interface for use in providing simultaneous two-way transmission of isochronous bipolar serial data signals at the rate of 2.048 Mbps and is only provided with an electrical interface. Before confirming the ASR for E1 service, the Telephone Company will verify the availability of fiber optic facilities at the CDL. Where suitable fiber optic facilities do not exist, customers may request the Telephone Company to provide such facilities in accordance with the Special Construction provisions set forth in Section 3.1.3 preceding.

5.3.7 Digital Data Service (DDS)

Provides DDS Special Access interface for use in providing simultaneous two-way transmission of sequential bipolar data signals at transmission speeds of 2.4 Kbps, 4.8 Kbps, 9.6 Kbps, 19.2 Kbps, 56 Kbps or 64 Kbps.

5.4 Description of Supplemental Features

Supplemental Features are items which can be added to a Special Access service to provide enhanced capabilities or improve its utility. References to specific uses or Special Access types indicate the most effective use for each Supplemental Feature. Customer use for other purposes or with other Special Access types is limited only to the extent that such use must not harm the network. Further, the Telephone Company does not guarantee functional operation of Supplemental Features for these alternate applications.

Listed below are the Supplemental Features that are offered under this Guide.

5.4.1 Bridging

Bridging is the function of connecting three or more CDLs in a multipoint arrangement. Listed below are those bridging services offered under this Guide.

(A) MultiPoint Data Bridging

This feature provides the capability to derive a multipoint data circuit from a single facility and is normally provided on Voiceband facilities provided for transmission of data signals. This function is provided on a per port basis. Polled multipoint data circuits are a typical application of this feature.

Service availability is limited. See # footnote on Page 5-20.

I

© 2022 Frontier Communications Parent, Inc. All rights reserved.

5 SPECIAL ACCESS (Cont'd)

5.4 Description of Supplemental Features (Cont'd)

5.4.1 Bridging (Cont'd)

(B) Voice Conference Bridging

Bridging arrangement to connect multiple Voiceband facilities in order that a voice frequency input signal from any location will be reproduced at the output of all other circuit locations. This function is provided on a per port basis.

(C) Alarm Distribution Bridging

Provides polling type bridging capabilities, band splitting filters and conversion of four-wire common terminations up to a capacity of 40 two-wire terminations. This function is offered as two tariff elements. The first element provides all shelving and common equipment for a capacity of 40 two-wire terminations. The second element provides a two-wire port. One common equipment rate element will apply to accommodate up to 40 two-wire terminations. One two-wire port charge will apply to each two-wire Special Access Line terminated in the bridge.

Program Audio Bridging

An arrangement to provide multiple channel outputs from a single Program Audio or Voiceband facility. This arrangement is provided and rated on a per port basis.

(E) DDS Bridging

Provides for a multi-junction unit (MJU) arrangement to bridge 2.4 kbps, 4.8 kbps, 9.6 kbps, 19.2 kbps, 56 or 64 kbps DDS facilities. Different speeds cannot be mixed on the same bridge. This function is provided on a per port basis.

© 2022 Frontier Communications Parent, Inc. All rights reserved.

5 SPECIAL ACCESS (Cont'd)

5.4 Description of Supplemental Features (Cont'd)

5.4.2 Conditioning Arrangements - Data

Data conditioning, when utilized in conjunction with effective four-wire Voiceband transmission facilities, improves the characteristics of these facilities. These improved characteristics are not represented to apply to the entire end to end facility of the customer, but only to that portion of the facility provided by the Telephone Company.

There are three types of data conditioning: Type C, Type C-Improved and Type DA. Type C and Type C-Improved conditioning control attenuation distortion and envelope delay distortion. Type DA controls the signal to C-notched noise ratio and intermodulation distortion. Type C and Type DA conditioning may be combined on the same circuit. Type C-Improved and Type DA conditioning may be combined on the same circuit.

Data conditioning is charged for on a per Special Access line basis. The parameters listed for each type of data conditioning apply from two or more CDLs located within the Telephone Company serving area. Conditioning parameters apply to each end of a two-point circuit. For multipoint circuits, the conditioning parameters apply from any CDL to either the point of interface at another CDL or the first Telephone Company bridging point depending on the circuit configuration. These parameters are not applicable to High Capacity or Wideband Analog points of interface, because there is no voice frequency test access point. In these instances the data conditioning parameters apply to the last telephone company voice frequency test access point before the High Capacity or Wideband Analog point of interface.

(A) Type C

Type C conditioning of Voiceband facilities provides a facility with the following transmission parameters enhanced to meet the values specified for Type C conditioning in Section 7000 of the GTE Technical Interface Reference Manual in addition to the standard parameters for Voiceband circuits.

(1) Attenuation distortion with reference to 1004 Hz.

(2) Envelope delay distortion.

(B) Type C-Improved

Type C-Improved conditioning of Voiceband facilities provides a facility with the following transmission parameters enhanced to meet the values specified for Type C conditioning in Section 7000 of the GTE Technical Interface Reference Manual in addition to the standard parameters for Voiceband circuits.

(1) Improved attenuation distortion with reference to 1004 Hz.

(2) Improved envelope delay distortion.

The customer may choose to order Improved Attenuation Distortion or Improved Envelope Delay Distortion or both configurations. The rates specified for Type C-Improved conditioning, Section 5.7.2(B), will apply regardless of the configuration specified.

© 2022 Frontier Communications Parent, Inc. All rights reserved.

5 SPECIAL ACCESS (Cont'd)

5.4 Description of Supplemental Features (Cont'd)

5.4.2 Conditioning Arrangements – Data (Cont'd

(C) Type DA

Type DA conditioning of Voiceband facilities provides a facility with the following transmission parameter enhanced to meet the values specified for Type DA conditioning in Section 7000 of the GTE Technical Interface Reference Manual in addition to the standard parameters for voiceband circuits.

(1) Signal to C-notched noise ratio.

(2) Nonlinear signal to second order distortion.

(3) Nonlinear signal to third order distortion.

© 2022 Frontier Communications Parent, Inc. All rights reserved.

5 SPECIAL ACCESS (Cont'd)

5.4 Description of Supplemental Features (Cont'd)

5.4.3 Conditioning - Program Audio

(A) Stereo Conditioning

Provides the option of two radio program facilities which are identical in all transmission characteristics. Two Program Audio facilities are required to provide this Supplemental Feature. This feature is normally used only with Program Audio 50 to 15000 Hz facilities. Stereo Conditioning is charged on a per occurrence basis.

(B) Zero Loss

Conditioning of Program Audio facilities to provide zero loss at 1000 Hz test frequency. Zero Loss is charged on a per Special Access Line basis.

5.4.4 Signaling Arrangements

Signaling arrangements, when furnished with Voiceband transmission facilities, enable the facilities to accommodate standard telecommunications signaling protocols. Signaling arrangements provide for the conversion of one signaling method to another signaling method and/or extension of a signaling method at customer and Telephone Company interfaces and enables the transmission facilities to accommodate signaling transmission. Signaling arrangements are available with Voiceband transmission facilities to enable transmission of requested signaling formats. The third and fourth protocol characters of the Network Channel Interface (NCI) and Secondary Network Channel Interface (SEC NCI) codes as indicated on the customer's order, reflect signaling activity. Typical protocol characters contained in the NCI or SEC NCI codes that designate signaling arrangements are: AB, AC, DS, DX, DY, EA, EB, EC, EX, GO, GS, LA, LB, LC, LO, LR, LS, NO, RV and SF.

The customer identified NCI and SEC NCI codes will be considered the customer's request for signaling. The Telephone Company will endeavor to provide the specific signaling protocols requested by the customer. In those cases where facilities and equipment are not available to meet the customer's specific requests, the Telephone Company will provide the customer acceptable alternate protocols. Sections 3300, 6000 and 7000 of the GTE Technical Interface Reference Manual provide detailed technical descriptions of the signaling protocols normally available with each service offering. To properly provision SF signaling, when associated signaling code, is DS (PCM), additional information of SF requirements (loop signaling type DX/E&M or ringdown) must accompany the customer's order.

Signaling arrangement charges apply whenever interfaces at the customer premises or at the customer's Telephone Company serving wire center require a signaling arrangement other than those provided with the Terminating Options in 5.3.2 preceding. Signaling Arrangements will be charged on a per SAL basis. Specifically, a signaling charge applies if the signaling protocol characters in the NCI and the SEC NCI fields are different and include one of the following codes: RV, EX, SF, DX, DY, DS, AB.

© 2022 Frontier Communications Parent, Inc. All rights reserved.

5 SPECIAL ACCESS (Cont'd)

5.4 Description of Supplemental Features (Cont'd)

5.4.4 Signaling Arrangements (Cont'd)

For the above conditions, one additional signaling charge applies for each additional leg of multipoint circuit. When a Multiplexing Arrangement is ordered that converts a single higher capacity or bandwidth circuit into several lower Voiceband circuits, the Voiceband Signaling Arrangements are provided as part of the Multiplexing Arrangement, and no additional Signaling Arrangement charges will apply.

A signaling charge applies in addition to any other applicable signaling charge when loop range extension equipment is required. The Telephone Company will obtain customer approval for signaling range extension equipment.

Listed below are the Signaling Arrangements offered under this Guide:

(A) Loop Signaling Range Extension - An arrangement to extend the metallic resistance limitations of loop type signaling.

(B) Conversion of Loop or E&M Signaling to SF - An arrangement to convert loop or E&M signaling to the single frequency signaling format.

(C) E&M to DX Signaling Conversion - Conversion of E&M signaling to the DX signaling format.

E&M to Loop Signaling Conversion - Conversion of E&M signaling format to the loop type signaling.

(E) Loop or E&M to PCM Signaling - Conversion of loop or E&M signaling to the digital (PCM) signaling format.

(F) Automatic Ringdown Signaling (ARD) - A signaling arrangement on a two-point Special Access which converts loop seizure at one end of the facility into ringing signal at the opposite end.

5.4.5 Echo Control

(A) Echo Suppression

An arrangement provided at the customer's request to attenuate reflected speech energy on a four-wire facility. This conditioning is generally required on circuits with long propagation delay. Echo suppression is charged on a per Special Access circuit basis. Echo suppression is an obsolete service offering and is applicable only to those circuits equipped with echo suppression prior to January 1, 1987. Any service rearrangements or order activity on the circuits equipped with echo suppression may require a change to echo canceller as described in 5.4.5(B) following.

© 2022 Frontier Communications Parent, Inc. All rights reserved.

5 SPECIAL ACCESS (Cont'd)

5.4 Description of Supplemental Features (Cont'd)

5.4.5 Echo Control (Cont'd)

(B) Echo Canceller

An arrangement provided at the customer's request to cancel reflected speech energy on a four-wire facility. This conditioning is generally required on circuits with long propagation delay. Echo canceller is charged on a per Special Access circuit basis.

5.4.6 Improved Return Loss

Improved Return Loss provides for increased echo return and singing return parameters of an effective two-wire channel. This optional feature is available with certain Voiceband services at a two-wire point of termination when the transmission interface is four-wire at one CDL and two-wire at the other CDL. Placement of Telephone Company equipment may be required at the customer's premises with the two-wire point of termination.

Improved Return Loss rates and charges will apply on a per Special Access Line basis at the rates specified in 5.7.2(B) following. Technical parameters and the applicable Voiceband services are specified in Section 7000 of the GTE Technical Interface Reference Manual.

5.4.7 Voiceband Facility Switching Arrangement

An arrangement to provide switching between two Voiceband Special Access Services. This arrangement may require a Voiceband control circuit to control the switching arrangement at an additional charge.

5.4.8 Automatic Protection Switch

Consists of special switching equipment placed at both ends of a duplicate DS1 facility (i.e., DS1, High Capacity Circuit) for automatic switching to the duplicate (standby) facility in the event the active facility is inoperative.

Duplicate facilities may terminate at a serving wire center, a CDL or both. The option provided under this Guide only includes the APS(s) located at a serving wire center(s). When the duplicate facility terminates at a CDL, the customer will be responsible for providing the associated APS and ensuring it is compatible with the Telephone Company provided switch if appropriate.

The duplicate facilities are not a part of this supplemental feature.

© 2022 Frontier Communications Parent, Inc. All rights reserved.

5 SPECIAL ACCESS (Cont'd)

5.4 Description of Supplemental Features (Cont'd)

5.4.9 Improved Termination Option

Improved Termination provides for a fixed 600 ohm impedance, an increased range of transmission levels, and simplex reversal (when applicable) on an effective four-wire channel. This optional feature is available with most Voiceband services with a four-wire point of termination. Telephone Company equipment is required at the customer's premises where this option is ordered.

The Improved Termination option will be ordered and rates and charges, as set forth in 5.7.2(B) following, will apply on a per SAL basis. Technical parameters and the applicable Voiceband services are specified in Section 7000 of the GTE Technical Interface Reference Manual.

5.4.10 Improved Equal Level Echo Path Loss Option - ELEPL-2

This option provides improved echo control parameters for an effective two-wire channel at a four-wire point of termination. Placement of Telephone Company equipment may be required at the customer's premises with the two-wire point of termination.

The term "Equal Level Echo Path Loss" (ELEPL) represents the measure of Echo Path Loss (EPL) at a four-wire interface which is corrected by the difference between the send and receive Transmission Level Point (TLP), i.e., ELEPL = EPL - TLP (send) + TLP (receive).

Improved ELEPL rates and charges will apply on a per SAL basis at the rates set forth in 5.7.2(B) following. Technical parameters are specified in Section 7000 of the GTE Technical Interface Reference Manual.

5.4.11 Digital Data Service Secondary Channel

This feature is offered on an optional basis to customers of Digital Data Service. It is a separate, slower speed digital channel that operates in parallel with the companion Digital Data Service primary channel. The secondary channel allows for remote control and testing of the network and peripheral devices without taking the network out of service and without lowering the speed of the primary Digital Data Service channel. This feature is not available with 19.2 Kbps or 64 Kbps Digital Data Service.

Rates and charges as set forth in 5.7.5(C) will apply on a per Digital Data Service SAL basis (each end of a two-point circuit and all ends of a multi-point circuit).

The provisioning of this option to existing Digital Data Service requires the discontinuance of the existing Digital Data Service and the establishment of new Digital Data Service for both ends of a two-point circuit and all ends of a multi-point circuit. The nonrecurring charges associated with the installation of Digital Data Service will apply.

© 2022 Frontier Communications Parent, Inc. All rights reserved.

5 SPECIAL ACCESS (Cont'd)

5.5 Description of Multiplexing Arrangements

Multiplexing Arrangements provide the function to convert a single higher capacity or bandwidth circuit for bulk transport to several lower capacity or bandwidth circuits. Cascading multiplexing occurs when a high capacity analog or digital channel is de-multiplexed to provide channels with a lesser capacity and one of the lesser capacity channels is further de-multiplexed. For example, a DS1C may be de-multiplexed to two DS1 facilities and then the DS1 facilities may be further de-multiplexed to 24 Voiceband channels.

When cascading multiplexing is performed in the same or different Hub Wire Center, a charge for the additional multiplexing unit will also apply. When cascading multiplexing is performed at a different Hub Wire Center, Special Transport will also apply between the involved Hub Wire Centers.

Listed below are the multiplexing arrangements offered under this Guide.

(A) Group to Voice

An arrangement that multiplexes twelve voice grade circuits to a single wideband analog group band circuit, or multiplexes a single wideband analog group band circuit to twelve voice grade circuits.

(B) Supergroup to Group

An arrangement that multiplexes five wideband analog group band circuits to a single wideband analog supergroup band circuit, or multiplexes a single wideband analog supergroup band circuit to five wideband analog group band circuits.

(C) Mastergroup to Supergrou

An arrangement that multiplexes ten wideband analog supergroup band circuits to a single wideband analog mastergroup band circuit, or multiplexes a single wideband analog mastergroup band circuit to ten wideband analog supergroup band circuits.

DS1 to Voice

An arrangement that multiplexes twenty-four voice grade circuits to a single DS1 digital circuit at a rate of 1.544 Mbps, or multiplexes a single DS1 digital circuit at a rate of 1.544 Mbps to twenty-four voice grade circuits. If this DS1 terminates in a DDS hub, a channel(s) of the DS1 can be used to provide DDS; however, DDS service stops at the DS1 interface. Multiple channels may be required to provide individual Program Audio Channels.

Up to 16 channels of this DS1 can be used for Direct Digital Service (DDS-like service) with the assurance that circuit performance parameters will be met. If more than 16 channels are used for DDS-like service, the performance parameters for the DS1 and all circuits riding the DS1 will not be guaranteed.

FT1 can be used in conjunction with DS1 to Voice Multiplexing in groupings of N x 56 Kbps or N x 64 Kbps where N = 2, 4 or 6, to a single DS1 digital circuit at a rate of 1.544 Mbps.

© 2022 Frontier Communications Parent, Inc. All rights reserved.

5 SPECIAL ACCESS (Cont'd)

5.5 Description of Multiplexing Arrangements (Cont'd)

(E) DS1C to Voice (

An arrangement that multiplexes forty-eight voice grade circuits to a single DS1C digital circuit at a rate of 3.152 Mbps, or multiplexes a single DS1C digital circuit at a rate of 3.152 Mbps to forty-eight voice grade circuits.

(F) DS1C to DS1 (

An arrangement that multiplexes two DS1 digital circuits to a single DS1C digital circuit at a rate of 3.152 Mbps, or multiplexes a single DS1C digital circuit at a rate of 3.152 Mbps to two DS1 digital circuits.

(G) DS3 to DS1 and/or E1

An arrangement that multiplexes twenty-eight DS1 digital circuits to a single DS3 digital circuit at a rate of 44.736 Mbps, or multiplexes a single DS3 digital circuit at a rate of 44.736 Mbps to twenty-eight DS1 digital circuits.

In addition, where E1 service is available, this arrangement is capable of multiplexing:

(1) twenty-one E1 digital circuits
(2) four DS1 and eighteen E1 digital circuits
(3) eight DS1 and fifteen E1 digital circuits
(4) twelve DS1 and twelve E1 digital circuits
(5) sixteen DS1 and nine E1 digital circuits
(6) twenty DS1 and six E1 digital circuits
(7) twenty-four DS1 and three E1 digital circuits

to a single DS3 digital circuit at a rate of 44.736 Mbps, or a single DS3 digital circuit at a rate of 44.736 Mbps to one of the combinations set forth in (1) through (7) above.

(H) DS3C to DS1
An arrangement that multiplexes fifty-six DS1 digital circuits to a single DS3C digital circuit at a rate of 89.472 Mbps, or multiplexes a single DS3C digital circuit at a rate of 89.472 Mbps to fifty-six DS1 digital circuits.

Group to DS1

An arrangement that multiplexes two wideband analog groupband circuits to a single DS1 digital circuit at a rate of 1.544 Mbps, or multiplexes a single DS1 digital circuit at a rate of 1.544 Mbps to two wideband analog groupband circuits.

(J) Digital Data Carrier Multiplexer

An arrangement that multiplexes a single DS1 1.544 Mbps digital circuit to twenty-three DSO digital ports for connection to either a subrate data multiplexer as described in 5.5(K) following or 56 Kbps digital circuits.

(K) Digital Data Subrate Multiplexer (

Used with cascading multiplexing, the Digital Data Subrate Multiplexer is an arrangement that multiplexes the following quantities of subrate digital data circuits into a single DSO digital port: 1) twenty 2.4 Kbps, 2) ten 4.8 Kbps or 3) five 9.6 Kbps. In turn, the DSO digital port is then multiplexed to a single DS1 digital circuit using the Digital Data Carrier Multiplexer described in 5.5(J) preceding.

© 2022 Frontier Communications Parent, Inc. All rights reserved.

5 SPECIAL ACCESS (Cont'd)

5.6 Rate Regulations

This section contains specific regulations governing the rates and charges that apply for Special Access Service.

Non-Competitive Counties are defined in Section 2.6 and the wire centers within such counties are listed in Section 19.2. In wire centers within a Competitive County, monthly rates and nonrecurring charges for Special Access rate elements are arranged in price bands.

For Interexchange Carrier Point of Presence Special Access lines, Special Transport and Optional Features and Functions, including Multiplexing Arrangements, Price Band rates and charges apply regardless of whether the county is Competitive or Non-Competitive. In cases where Special Transport crosses price bands, the charge for the higher numbered price band applies.

End User Special Access Lines, the application of "Price Cap" or "Price Band" is dependent upon whether or not the serving wire center is located in a Competitive County. If the End User Special Access Line is in a Competitive County, Price Band rates and charges apply. If the End User Special Access Line is in a Non-Competitive County, Price Cap rates and charges apply. Any rate element that is not labeled as either Price Band or Price Cap will apply in both Competitive and Non-Competitive Counties.

5.6.1 Types of Rates and Charges

There are five types of rates and charges. These are monthly rates, weekly rates, daily rates, time sensitive rates and nonrecurring charges. The rates and charges are described as follows:

(A) Monthly Rates

Monthly rates are recurring charges that apply each month or fraction thereof that a Special Access Service is provided. For billing purposes, each month is considered to have 30 days.

(B) Daily Rates

Daily rates are recurring charges that apply to each 24 hour period or fraction thereof that a part-time Program Audio or Video Digital Transport Service Special Access Service is provided. When part-time Program Audio service is provided for ten or more consecutive days it will be treated as a full-time service and monthly rates will apply. In no event will the charges for continuous part-time Program Audio or Video Digital Transport Service exceed the amount that would be charged in the same billing time period for full-time service.

(C) Weekly Rates

Weekly rates are charges that apply to each seven day usage period that a Video Digital Transport Service Service is provided, as requested by the customer. In no event will these part-time charges for continuous weekly usage, within the billing period, exceed the monthly rate.

© 2022 Frontier Communications Parent, Inc. All rights reserved.

5 SPECIAL ACCESS (Cont'd)

5.6 Rate Regulations

5.6.1 Types of Rates and Charges

Time Sensitive Rates

Time sensitive rates are charges that are applied either on an hourly basis or on a fraction of an hour basis.

(1) Hourly Rates

Hourly rates are recurring charges that apply to each 60 minute period, or fraction thereof, that a part-time Video Digital Transport Service Special Access Service is provided. The billing period commences when the video circuit is available for the customer's use and ceases when the customer's use is discontinued. There is a maximum monthly charge that may be assessed to any Temporary Video Digital Transport Service - Type I Special Access Service. The maximum charge during any 30 day period will be that amount equal to 100 hours of use.

For Video Digital Transport Service - Type II 270 Mbps, an optional feature, onnect[sm] - Codec Conversion is offered on an hourly basis. In no event will the charges for continuous hourly usage exceed the daily rate.

(2) Fractional Hour Rates

Fractional hour rates are recurring charges that are applied for increments of time less than a 60 minute period, and are associated with Video Digital Transport Service - Type II transmission. For Video Digital Transport Service - Up to 45 Mbps, these charges are applied for a minimum initial period of 5 minutes or fraction thereof. Thereafter, each continuous minute of connection over the initial 5 minutes is charged at the additional minute rate under Section 5.7.4(B)(1)(a). This incremental rate structure will be applied for continuous usage up to the point where the next charge level (daily rate) is lower than the charges calculated for the fractional hour usage. Where the daily rate is lower than the resulting incremental usage rates, the daily rate will be applied.

Material on this page formerly appeared on Page 5-42

© 2022 Frontier Communications Parent, Inc. All rights reserved.

5 SPECIAL ACCESS (Cont'd)

5.6 Rate Regulations (Cont'd)

5.6.1 Types of Rates and Charges (Cont'd)

(E) Zone Density Plan - Special Access

The Zone Density Rate Plan is a pricing unit for rating High Capacity Special Access DS1 and DS3 Services. The Zone Density Plan assigns every Serving Wire Center (SWC) to one of three zones. The Serving Wire Center, CLLI Codes and zones are listed in Section 19. Zone 1 SWCs have the highest density of services, Zone 2 SWCs have intermediate density of services and Zone 3 SWCs have the lowest density of services. Zone Density Plan rates become effective in a study area concurrent with the first operational Expanded Interconnection Service (EIS), as described in Section 17, in that study area.

The Zone Density Plan for Special Access is applicable only to DS1 (1.544 Mbps) and DS3 (44.736 Mbps) services.

(1) Zone Density rates are set forth in Sections:

5.7.6 - Multiplexing Arrangements
5.7.7 - High Capacity Digital DS1
5.7.10 - High Capacity Digital DS3 Three System
5.7.11 - High Capacity Digital DS3 Unlimited System
5.7.12 - High Capacity Digital DS3 Individual System
5.7.13 - High Capacity Digital DS3 Group System*
5.7.14 - High Capacity Digital DS3 Transport
5.7.15 - DS3 Multiplexer Cross Connect Arrangement
5.7.18 - DS1 Term Volume Plan
5.8.5 - Clear Channel Capability

(2) Special Access Lines and Transport Terminations are rated according to the Zone of the SWC where they are located.

(3) Special Transport provisioned between SWCs in two different zones will be rated at the higher zone rate.

(4) Zone Density Plan for special access provided by more than one telephone company will be provided as set forth in Section 2.7.4(B).

© 2022 Frontier Communications Parent, Inc. All rights reserved.

5 SPECIAL ACCESS (Cont'd)

5.6 Rate Regulations (Cont'd)

5.6.1 Types of Rates and Charges (Cont'd)

(F) Nonrecurring Charges

Nonrecurring charges are one-time charges that apply for specific work activity, (i.e., installation of service or change to an existing service). The types of nonrecurring charges that apply for Special Access Service are those listed below.

(1) Design Change Charge

The customer may request a design change to the service ordered. A design change is any change to a pending ASR for Special Access Service which requires engineering review. Design changes include such things as the addition or deletion of supplemental features or changes in the terminating options. Design changes do not include a change of IC CDL or end user premises when its serving wire center changes or Special Access service type (e.g., 2-wire to 4-wire Voiceband or Voiceband to Program Audio, etc.). Changes of this nature will require the issuance of a new ASR and the cancellation of the original ASR. The cancellation charges apply as set forth in 3.2.6 preceding.

The Telephone Company will review the requested change, notify the customer whether the change can be accommodated and specify if a new service date is required. If the customer authorizes the Telephone Company to proceed with the design change, a Design Change Charge will apply.

The Design Change Charge, as set forth in 5.7.1 following, will apply on a per ASR per occurrence basis, for each ASR requiring a design change.

If a change of service date is required, the Service Date Change Charge as set forth in Section 3 preceding will also apply.

(2) Installation of Supplemental Features andMultiplexing Arrangements

Nonrecurring charges apply for the installation of some supplemental features and multiplexing arrangements available with Special Access service. The charge applies whether the feature or multiplexing arrangement is installed coincident with the initial installation of service or at any time subsequent to the installation of service.

For additions of supplemental features without an NRC, a charge equal to a SAL NRC will apply. Only one such charge per service, per order will apply.

© 2022 Frontier Communications Parent, Inc. All rights reserved.

5 SPECIAL ACCESS (Cont'd)

5.6 Rate Regulations (Cont'd)

5.6.1 Types of Rates and Charges (Cont'd)

(F) Nonrecurring Charges (Cont'd)

(3) Installation of FiberConnect, FT1, DS3, E1 and DS1 Special Access Lines

(a) FiberConnect Service Optional Payment Plan (OPP)#

Customers subscribing to the FiberConnect OPP, at rates set forth in 5.7.8 following, will be assessed a nonrecurring charge (NRC). The NRC applies to the termination of each FiberConnect OPP SAL (which consists of four (4) DS1 equivalent channels on a single fiber optic transmission system). The customer must indicate on the ASR the Network Channel Interface (NCI) code for electrical termination.

When the customer purchases a FiberConnect OPP in a point-to-point configuration (i.e., a 2-point, non-multiplexed configuration that connects two (2) CDLs), the SALs at each CDL must be FiberConnect OPP SALs.

The NRC for installation of a FiberConnect SAL, as set forth in 5.7.8(A) following, will apply to existing FiberConnect OPP customers for changes and other service rearrangements as set forth in 5.6.1(F)(6) following.

Where suitable fiber optical facilities are not available, customers may request the Telephone Company to provide such facilities in accordance with the Special Construction provisions in Section 3.1.3 preceding.

(b) Fractional T1 Standard Arrangements

Customers subscribing to Fractional T1 service, at rates set forth in 5.7.9(A), will be assessed a nonrecurring charge. The NRC for Fractional T1 service will be assessed per SAL.

Effective November 21, 2017, new subscriptions to FiberConnect Service Optional Payment Plan is no longer permitted. FiberConnect Service Optional Payment Plan customers subscribed as of November 21, 2017 may continue with their existing subscriptions. If at any time an existing customer terminates its FiberConnectService Optional Payment Plan, the customer may not re-subscribe to the plan.

© 2022 Frontier Communications Parent, Inc. All rights reserved.

5 SPECIAL ACCESS (Cont'd)

5.6 Rate Regulations (Cont'd)

5.6.1 Types of Rates and Charges (Cont'd)

(F) Nonrecurring Charges (Cont'd)

(3) Installation of FiberConnect, FT1, DS3, E1 and DS1 Special Access Lines (Cont'd)

(c) Fractional T1 Optional Payment Plan (OPP) Arrangements

Customers subscribing to the Fractional T1 OPP arrangements, at rates set forth in 5.7.9(B), will not be assessed a nonrecurring charge.

The Regulations in Section 5.6.1(F)(6) following will apply to FT1 OPP customers when required for changes and other service rearrangements.

(d) DS3 Arrangements

There are two levels of charges for the installation of 3 System DS3 and Unlimited System DS3 SALs as set forth in 5.7.10 and 5.7.11. The "First System" charge is assessed for the first DS3 SAL ordered by a customer. When the same customer requests additional DS3 SALs, to be installed between the same locations, the "Additional System" charge will apply for each SAL ordered (maximum of two Additional System SALs in a 3 System DS3 and no maximum in an Unlimited System DS3).

For Individual DS3s, the charge for installation will apply at the same rate per DS3 SAL, and for Group System DS3s*, the charge applies per Group System* SAL.

© 2022 Frontier Communications Parent, Inc. All rights reserved.

5 SPECIAL ACCESS (Cont'd)

5.6 Rate Regulations (Cont'd)

5.6.1 Types of Rates and Charges (Cont'd)

(F) Nonrecurring Charges (Cont'd)

(3) Installation of DS1, FiberConnect, FT1, DS3 and E1 Special Access Lines (Cont'd)

(e) E1 Arrangements

Customers subscribing to E1 service will be assessed a nonrecurring charge and monthly rates as set forth in 5.7.19. Suitable fiber optic facilities must be available at the CDL with no physical change in the existing configuration at the CDL. If this condition is not met, the customer will be advised that the ASR will not be processed. The customer may then cancel the ASR without charge, or may request the Telephone Company to provide such facilities in accordance with the Special Construction provisions set forth in Section 3.1.3 preceding.

(f) DS1 Standard Arrangements

Customers subscribing to DS1 Standard Arrangements, at rates set forth in 5.7.7(A) following, will be assessed a nonrecurring charge. The NRC for DS1 Standard Arrangements will be assessed per SAL.

The regulations in Section 5.6.1(F)(6) following will apply to existing DS1 Standard Arrangements customers when required for changes and other service arrangements.

(4) Installation of Video Digital Transport Service

(a) Temporary Video Digital Transport Service - Type I

There are two nonrecurring charges set forth in Section 5.7.4(A) for the installation of Temporary Video Digital Transport Service - Type I. One nonrecurring charge will be assessed when permanent in place facilities are used to provide the service, and a different nonrecurring charge will be assessed when nonpermanent portable facilities are used to provide the service.

If the customer orders Temporary Video Digital Transport Service - Type I with broadcast intervals of 5 nonconsecutive days or less within a 7-day period, the Telephone Company may, if facilities are available, leave the facilities in place, in which case the associated installation nonrecurring charges would not apply.

© 2022 Frontier Communications Parent, Inc. All rights reserved.

5 SPECIAL ACCESS (Cont'd)

5.6 Rate Regulations (Cont'd)

5.6.1 Types of Rates and Charges (Cont'd)

(F) Nonrecurring Charges (Cont'd)

(4) Installation of Video Digital Transport Service (Cont'd)

(b) Video Digital Transport Service - Type II

Initially, an ASR is required from the customer to establish an account for Video Digital Transport Service Type II, prior to a request for video connection. Once the account has been established, the customer may request video connection where facilities are available, by using their remote terminal or contacting the Telephone Company's Video Transport Contact Center. The customer will input or provide the originating and terminating location(s) for the video connection and the expected duration of the transmission.

© 2022 Frontier Communications Parent, Inc. All rights reserved.

5 SPECIAL ACCESS (Cont'd)

5.6 Rate Regulations (Cont'd)

5.6.1 Types of Rates and Charges (Cont'd)

(F) Nonrecurring Charges (Cont'd)

(5) Installation of Voicegrade, Program Audio and Digital Data Service Special Access Lines

The nonrecurring charge associated with the installation of voicegrade SALs is specified in 5.7.2(A). The nonrecurring charge associated with the installation of program audio SALs is specified in 5.7.3(A) through . This charge will not apply to part-time Program Audio SALs which are left in place and reused.

The nonrecurring charge associated with the installation of DDS SAL facilities and the provisioning of the customer specified transmission speed of 2.4, 4.8, 9.6, 19.2, 56 or 64 Kbps is specified in Section 5.7.5(A).

(6) Service Rearrangements

Service rearrangements are changes to existing (installed) services which may be administrative only in nature or involve an actual physical change to the service. Changes to pending orders are in 3.2.2.

Changes in the type of service will be treated as a discontinuance of the service and an installation of a new service.

Changes in the physical location of the point of termination are treated as moves which are described and charged for as in 5.6.4.

Administrative changes will be made without charge(s) to the customer.

Administrative changes are as follows:

- Change in name or ownership or transfer of responsibility from one customer to another, provided there is no interruption of use or relocation of Special Access service.
- Change of customer or customer's end user premises address when the change of address is not a result of a physical relocation of equipment,
- Change in billing data (name, address, or contact name or telephone number),
- Change of customer circuit identification,
- Change of billing account number,
- Change of customer test line number,
- Change of customer or customer's end user contact name or telephone number,
- Change of agency authorization, and
- Change in jurisdiction involving no physical changes to the service.

© 2022 Frontier Communications Parent, Inc. All rights reserved.

5 SPECIAL ACCESS (Cont'd)

5.6 Rate Regulations (Cont'd)

5.6.1 Types of Rates and Charges (Cont'd)

(F) Nonrecurring Charges (Cont'd)

(6) Service Rearrangements (Cont'd)

All other service rearrangements will be charged for as follows:

- If the change involves the addition of another termination to an existing two-point or multipoint service, installation charges for each location added will apply.

- If the change involves the addition of supplemental feature or multiplexing arrangement, the installation charge associated with the supplemental feature or multiplexing arrangement will apply. When the supplemental feature or arrangement has no associated nonrecurring charge (or rated at $.00), one SAL nonrecurring charge for the type of service involved (i.e., voicegrade SAL, DDS SAL, etc.) will be applied to the order.

- If the change involves only changing the type of network interface, with no change in facility, the installation charge associated with each service receiving a network interface change will apply.

- If the change involves changing a two-wire service to a four-wire service or vice versa, the installation charge for each location changed will apply.

- If the change involves only rollovers or grooming, then no charges will apply. A rollover is the retermination of a segment of a lower capacity special access service onto a higher capacity special access service. The rollover must occur in the wire center where the higher capacity service is multiplexed with no other changes to the lower capacity service being reterminated (i.e., the segment must not require rerouting to connect to the multiplexer of the higher capacity service).

  Grooming is the retermination of a lower capacity special access service from one channel in a higher capacity special access service to another channel in the same higher capacity service or to another channel in another higher capacity special access service (i.e., change in connecting facility assignment) in the same wire center, with no other changes to the lower capacity service.

© 2022 Frontier Communications Parent, Inc. All rights reserved.

5 SPECIAL ACCESS (Cont'd)

5.6 Rate Regulations (Cont'd)

5.6.1 Types of Rates and Charges (Cont'd)

(F) Nonrecurring Charges (Cont'd)

(6) Service Rearrangements (Cont'd)

ROLLOVER – EXAMPLE 1
Current Configuration

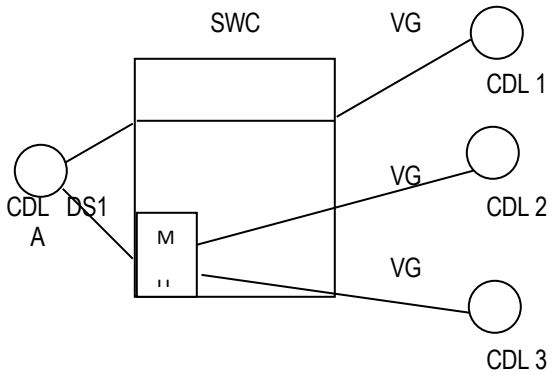

The customer requests that the voiceband circuit (VG) between CDL A and CDL 1 be "rolled over" to the DS1 servingCDL A. No NRCs apply for this request.

ROLLOVER – EXAMPLE 1
New Configuration

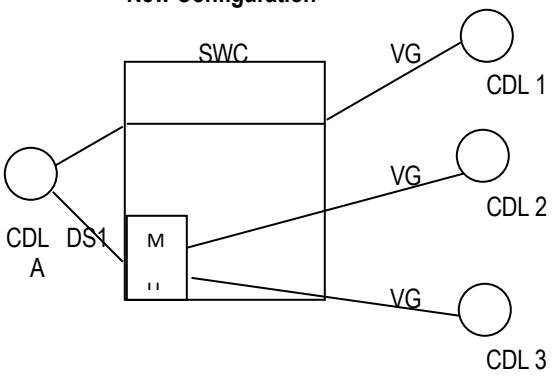

© 2022 Frontier Communications Parent, Inc. All rights reserved.

5 SPECIAL ACCESS (Cont'd)

5.6 Rate Regulations (Cont'd)

5.6.1 Types of Rates and Charges (Cont'd)

(F) Nonrecurring Charges (Cont'd)

(6) Service Rearrangements (Cont'd)

ROLLOVER – EXAMPLE 2
Current Configuration

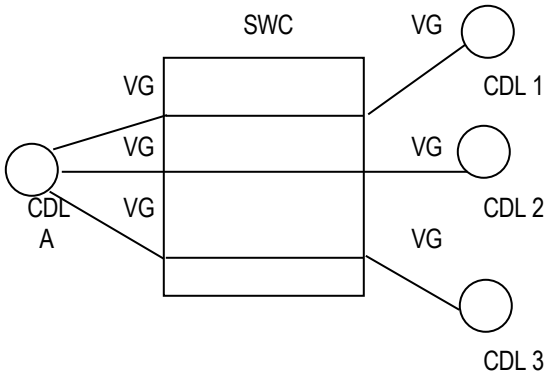

The customer requests the installation of a DS1 between the serving wire center (SWC) and CDL A and a DS1/voice multiplexer in the SWC. The customer also requests that the voiceband circuits serving CDLs 1, 2 and 3 be "rolled over" to the new DS1. All NRCs apply for the installation of the DS1 and multiplexer. No NRCs apply for the voiceband rollovers to the new high capacity circuit.

ROLLOVER – EXAMPLE 2
New Configuration

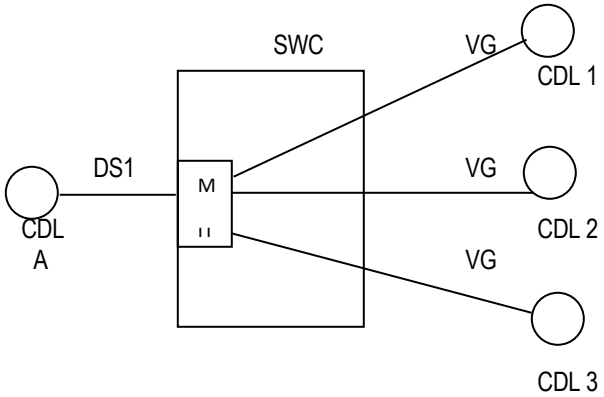

© 2022 Frontier Communications Parent, Inc. All rights reserved.

5 SPECIAL ACCESS (Cont'd)

5.6 Rate Regulations (Cont'd)

5.6.1 Types of Rates and Charges (Cont'd)

(F) Nonrecurring Charges (Cont'd)

(6) Service Rearrangements (Cont'd)

GROOMING – EXAMPLE 1
Current Configuration

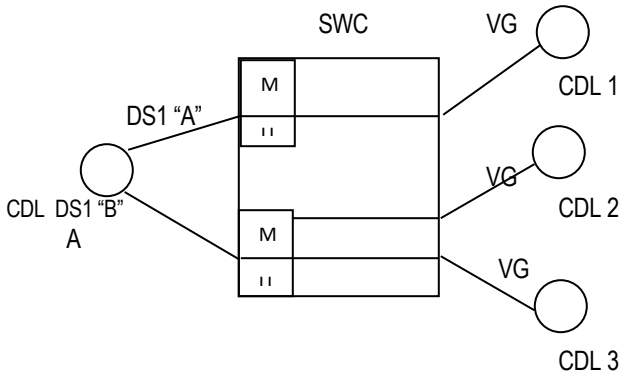

The customer requests that the voiceband (VG) circuit serving CDL 1 be moved from the DS1 "A" circuit to the DS1 "B" circuit. No NRCs apply for this request.

GROOMING – EXAMPLE 1
New Configuration

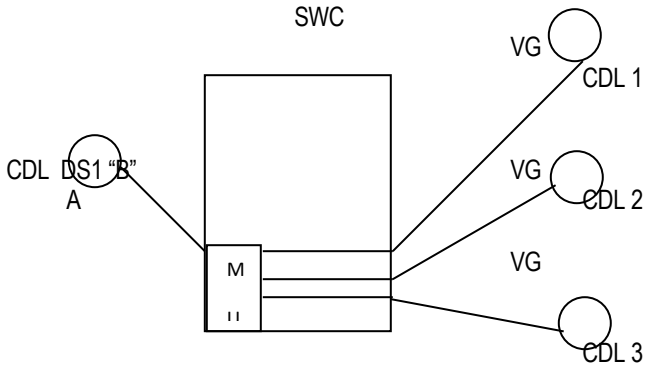

© 2022 Frontier Communications Parent, Inc. All rights reserved.

5 SPECIAL ACCESS (Cont'd)
5.6 Rate Regulations (Cont'd)
5.6.1 Types of Rates and Charges (Cont'd)
(F) Nonrecurring Charges (Cont'd)
(6) Service Rearrangements (Cont'd)

GROOMING – EXAMPLE 2
Current Configuration

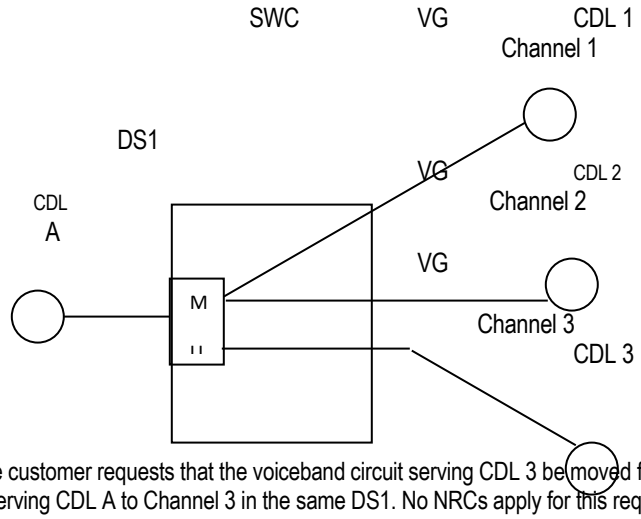

The customer requests that the voiceband circuit serving CDL 3 be moved from channel 20 in the DS1 serving CDL A to Channel 3 in the same DS1. No NRCs apply for this request.

GROOMING – EXAMPLE 2
New Configuration

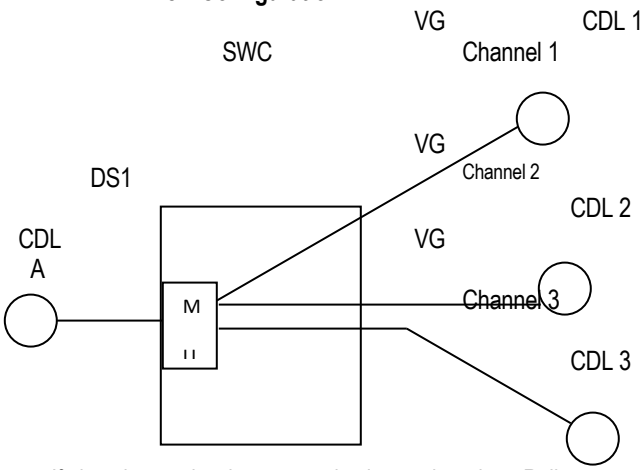

- If the change involves reterminations other than Rollovers and/or Grooming, all NRCs associated with the installation of the lower capacity service will apply.

- In cases where multiple service rearrangements or an additional termination or a move and a service rearrangement are requested on a single ASR, the total charge will never exceed the full nonrecurring charge for the basic service.

(N)

(7) Disconnect Non-Recurring Charge - In addition to any other charges associated with discontinuance of services, the Telephone Company will charge a disconnect non-recurring charge to discontinue services. This charge applies on a per circuit basis. The customer shall be responsible for payment of a disconnect non-recurring charge equivalent to one (1) month of recurring charges for the Guide rate elements billed on the circuit immediately prior to disconnect. In addition to the disconnect non-recurring charge, minimum service period charges and early termination liability may apply if the circuit term or minimum service period has not been met. (N)

© 2024 Frontier Communications Parent, Inc. All rights reserved.

5 SPECIAL ACCESS (Cont'd)

5.6 Rate Regulations (Cont'd)

5.6.2 Minimum Periods

Special Access is provided for a specified minimum period. Minimum periods and minimum period charges are described in Section 3 preceding.

5.6.3 Mileage Measurement

The mileage to be used to determine the monthly rate for the Special Transport is calculated on the airline distance between the serving wire centers involved (i.e., CDL serving wire center or Hub Wire Center or WATS Serving Office). Where the calculated miles include a fraction, the value is always rounded up to the next full mile. Where the calculated value is zero, no Special Transport mileage is charged.

When there is a Hub Wire Center involved, the Special Transport mileage will be measured from the Hub Wire Center to the serving wire centers of each of the CDLs connected to the hubbed facilities. Mileage is computed for each section and rates are applied accordingly. However, when a Special Access facility is routed through a Hub Wire Center for purposes other than customer specified such as bridging or multiplexing (e.g. the Telephone Company chooses to so route for test access purposes), rates will be applied only to the distance calculated between the wire centers serving the CDLs.

The rates for the mileage are applied per airline mile. The serving wire center V&H coordinates and the method of calculation are specified in the NECA Tariff FCC No. 4.

5.6.4 Moves

A move involves a change in the physical location of the point of termination of Special Access. A move normally involves an interruption of Special Access for the period required to complete the move. No credit allowance will be granted for that period. Special Construction as set forth in Section 3.1.3 preceding may also be applicable at the different CDL.

A customer may request that Special Access not be interrupted during a move. To comply with that request, it may be necessary to install a duplicate Special Access, and subsequently discontinue the existing Special Access. Charges, monthly and nonrecurring, will apply for the duplicate Special Access. A new minimum period will be established for the duplicate portion of the Special Access, depending on which end of the Special Access is moved. The customer will remain responsible for all minimum period charges associated with the corresponding portion of the disconnected Special Access.

The charge for the move depends on whether the move is within the same CDL or to a different CDL.

(A) Same CDL

When the move of a termination of FIA, as defined in Section 2.1.5, for special access is to a new point within the same CDL (same address and/or same building), the charge for the move will be the installation charge for the portion of the service being reterminated. There will be no change in the minimum period requirements. For services subject to payment plan regulations, the same payment period will remain in force.

© 2022 Frontier Communications Parent, Inc. All rights reserved.

5 SPECIAL ACCESS (Cont'd)

5.6 Rate Regulations (Cont'd)

5.6.4 Moves (Cont'd)

(B) Different CDL

(1) When the move is to a different CDL (different address and different building), except as specified below, it will be treated as a disconnect and an installation of service. The appropriate service installation charge for the service termination(s) affected will apply. A new minimum period will be established for the installed Special Access Service. The customer will remain responsible for all minimum period charges associated with the disconnected Special Access Service. For services subject to payment plan regulations, a new payment plan will be established and full assessment of the remaining liabilities will be applicable.

(2) When the move is to a different CDL but served by the same serving wire center, the following conditions apply:

- A change ASR will be required.
- The appropriate service installation charge for the service termination(s) affected will apply.
- For Special Access services subject to payment plan regulations, if the customer of record remains the same with no lapse in service, the appropriate NRCs for changes will apply. Otherwise, the move will be treated as a disconnect and an installation of service and all appropriate NRCs and full assessment of the remaining liabilities will be applicable.

5.6.5 Rates and Charges on an Individual Case Basis

(A) The monthly rates and nonrecurring charges for the following service offerings will be developed on an Individual Case Basis:

- Full-time Videoband - Type I Facilities
- Wideband Analog - Group Band Facilities
- Wideband Analog - Supergroup Band Facilities
- Wideband Analog - Mastergroup Band Facilities
- High Capacity Digital DS1C (3.152 Mbps) Special Access Lines
- High Capacity Digital DS1C (3.152 Mbps) Special Transport
- High Capacity Digital DS3C (89.472 Mbps) Facilities

(B) The monthly rates and nonrecurring charges for the following Multiplexing Arrangements will be developed on an Individual Case Basis:

Group to Voice
Supergroup to Group
Mastergroup to Supergroup
DS1C to Voice
DS1C to DS1
DS3C to DS1
Group to DS1

© 2022 Frontier Communications Parent, Inc. All rights reserved.

5 SPECIAL ACCESS (Cont'd)

5.6 Rate Regulations (Cont'd)

5.6.5 Rates and Charges on an Individual Case Basis (Cont'd)

C) The monthly rates and nonrecurring charges for the following Supplemental Features will be developed on an Individual Case Basis:

Dataphone Select-a-Station Bridging Common Equipment - Addressable.

Dataphone Select-a-station Bridging - Each Four-Wire Port.

© 2022 Frontier Communications Parent, Inc. All rights reserved.

5 SPECIAL ACCESS (Cont'd)

5.6 Rate Regulations (Cont'd)

5.6.6 Hub Wire Centers

A Hub Wire Center is a Telephone Company designated serving wire center at which bridging or multiplexing arrangements are provided. Bridging is used to connect three or more CDLs in a multipoint arrangement. The multiplexing arrangements channelize analog or digital facilities to individual services requiring a lower capacity or bandwidth.

Although Hub Wire Centers are defined as serving wire centers at which bridging or multiplexing arrangements are performed, they are not limited to providing these functions and may provide any other types of Special Access services offered in this Guide. For example, the Telephone Company will designate certain Hub Wire Centers for Program Audio service offerings and the termination of Group System DS3* Special Transport.

The Telephone Company will designate the Hub Wire Center locations. Different locations may be designated as Hub Wire Centers for different functions, such as bridging or multiplexing arrangements, for different facility capacities (e.g., multiplexing from digital to digital may occur at one wire center while multiplexing from digital to analog may occur at a different wire center). The location of Hub Wire Centers and the types of hubbing functions offered at that location are identified in the NECA Tariff FCC No. 4.

Some of the types of multiplexing provided include the following:

- from higher to lower bit rate,
- from higher to lower bandwidth,
- from digital to voice grade service.

The transmission performance for the end to end Special Access provided from CDLs will be that of the lower capacity or bit rate. For example, when a DS1 Special Access is multiplexed to voice frequency circuits, the transmission performance will be Voiceband, not High Capacity.

The Telephone Company will commence billing the monthly rate for the Special Access Line and Special Transport or Special Access Cross Connect charge for EIS arrangements, for the High Capacity facility to the Hub Wire Center as of the service date, even though individual services utilizing those facilities may not be installed until a later date. If the customer has designated the type of multiplexing to be provided with the High Capacity facility, the nonrecurring charge for the Multiplexing Arrangement will be billed to the same customer at that same time, and the billing for the monthly rate will begin.

Individual Special Access rates (by Special Access type) will apply for the Special Access Line and additional Special Transport facilities (if required) for each channelized Special Access. These will be billed to the customer specified on the ASR as each individual Special Access is installed. The appropriate application of rate elements is specified in 5.6.7(B). Shared use of a digital high capacity facility is provided for in 5.6.7(A).

A customer may order full-time and/or part-time Program Audio Services between two CDLs, or between a CDL and a Hub Wire Center, and will be billed accordingly at the rates set forth in Sections 5.7.3(A), 5.7.3(B), 5.7.3(C) and 5.7.3 following.

* Limited to those services so equipped and in service as of March 4, 1999.

© 2022 Frontier Communications Parent, Inc. All rights reserved.

5 SPECIAL ACCESS (Cont'd)

5.6 Rate Regulations (Cont'd)

5.6.6 Hub Wire Centers (Cont'd)

At the request of the customer, the full-time and/or part-time services provided to a Hub Wire Center may be connected together in the following configurations: full-time to full-time, full-time to part-time, or part-time to part-time.

The rates that apply for Program Audio Services between each CDL and the Hub Wire Center are Special Transport, if applicable, and Special Access Line. In addition, rates for Supplemental Features may be applicable.

5.6.7 Shared Use Analog and Digital High Capacity Services*

(T)

Shared Use refers to a rate application applicable only when the customer orders High Capacity Special Access facilities between a customer designated premises and a Telephone Company hub where the Telephone Company performs multiplexing/de-multiplexing functions and the same customer then orders the derived channels as Special and Switched Access Services. If the customer has Switched Access Service between a customer designated premises and an end office that is multiplexed at a Telephone Company hub and subsequently orders the derived channels as Special and Switched Access Service, rates and charges will apply as if the service were ordered as shared use.

Shared use of Special Access Cross Connect and Expanded Interconnection service are not available

Except as noted above, the High Capacity facility will be ordered, provided and rated as Special Access Service (i.e., Channel Termination, Channel Mileage, as appropriate, and Multiplexing Arrangement). The nonrecurring charge that applies when the shared use facility is installed will be the nonrecurring charge associated with the appropriate Special Access High Capacity Channel Termination. Rating as Special Access will continue until such time as the customer chooses to use a portion of the available capacity for Switched Access Service. Individual service (i.e., Switched or Special Access) nonrecurring charges will not apply to the individual channels of the shared use facility.

When Special Access Service is provided utilizing a channel of the shared use facility to a hub, High Capacity rates and charges will apply for the facility to the hub, as set forth preceding, and individual service rates and charges will apply from the hub to the customer designated premises. The rates and charges that will apply to the portion from the hub to the customer designated premises will be dependent on the specific type of Special Access Service that is provided. The applicable rates and charges will include a Channel Termination and Channel Mileage, if applicable. Rates and charges for optional features and functions associated with the service, if any, will apply for the appropriate channel type

(T)

* Shared Use Analog and Digital High Capacity Services are not available for arrangements between service areas listed under 5.2.7(H).

© 2023 Frontier Communications Parent, Inc. All rights reserved.

5 SPECIAL ACCESS (Cont'd)

5.6 Rate Regulations (Cont'd)

5.6.7 Shared Use Analog and Digital High Capacity Services* Cont'd)

As each individual channel is activated for Switched Access Service, the High Capacity Special Access Channel Termination, Channel Mileage, and Multiplexing rates will be reduced accordingly (e.g., 1/24th for a DS1 service, etc.). Switched Access Service rates and charges, as set forth in Section 20 following, will apply for each channel that is used to provide a Switched Access Service. Additionally, the Switched Access Service Entrance Facility, Direct Trunked Transport, and Multiplexing charges, if applicable, will be reduced by multiplying their respective rates by the ratio of derived Switched Access Service channels to the total number of Voice Grade channels that can be derived. (T)

The customer must place an order for each individual Switched or Special Access Services utilizing the Shared Use Facilities and specify the channel assignment for each such service. (T)

Shared use of Special Access Fractional T1 (FT1) and FiberConnect is not available.

Shared Use Analog and Digital High Capacity Services are not available for arrangements between service areas listed under 5.2.7(H).

© 2023 Frontier Communications Parent, Inc. All rights reserved.

5 SPECIAL ACCESS (Cont'd)

5.6 Rate Regulations (Cont'd)

5.6.8 Video Digital Transport Services

(A) Type I

The rates and charges for use of facilities for Temporary Video Digital Transport Service - Type I Service are assessed on a per hop basis. A hop is defined as the transporting of a one-way video and associated audio signal(s) in a direct path from a transmitter location to the adjacent receiver location. The distance of a single hop is primarily a factor of the local geographics of the video path, therefore, more than one hop may be required between CDLs. The following diagram depicts a single hop.

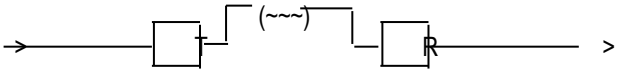

There are two separate rate categories for a hop which are based on the provisioning of service:

- Video broadcasts which use permanent facilities, and

- Video broadcasts which use nonpermanent facilities.

(1) Use of Permanent Facilities for Temporary Video Digital Transport Service Type I, Broadcast

Permanent facilities are those in-place facilities that are not removed at the end of a broadcast.

The rates and charges for services provided over permanent facilities for Nonrecurring Charges, for Hourly Charges, and for Technician Standby, are set forth in Section 5.7.4(A). Nonrecurring Charges for Temporary Video Digital Transport Service - Type I are also described in Section 5.6.1(E)(4).

The Telephone Company does not contemplate constructing permanent facilities to provision future requests for temporary Type I Video Digital Transport Service service. However, in the event that a customer requests this type of provisioning in those states not designated as "NA", as set forth in 5.7.4 following, the Telephone Company will provide such facilities under Special Construction as set forth in Section 3.1.3 preceding. Accordingly, such facilities are deemed to be provided for the sole use of that customer and no other future use of those facilities is planned or expected by the Telephone Company.

© 2022 Frontier Communications Parent, Inc. All rights reserved.

5 SPECIAL ACCESS (Cont'd)

5.6 Rate Regulations (Cont'd)

5.6.8 Video Digital Transport Services (Cont'd)

(A) Type I (Cont'd)

(2) Use of Nonpermanent Facilities for Temporary Video Digital Transport Service Type I, Broadcast

Nonpermanent facilities consist of portable microwave equipment (e.g., transmitter, receiver, antenna, connecting cables and associated equipment) which is set up for the broadcast and subsequently removed after the broadcast.

The rates and charges for services provided over nonpermanent facilities for Nonrecurring Charges, for Hourly Charges, and for Technician Standby are set forth in Section 5.7.4(A) following. Nonrecurring Charges for Temporary Video Digital Transport Service - Type I are described in Section 5.6.1(E)(4).

Where multiple hops are required to provide the requested service, the rates and charges will apply to each hop set up for the broadcast. The Technician Standby charge will only apply to the time the Video Digital Transport Service Type 1 service is provided. The Technician Standby charge is not applied on a per hop basis.

© 2022 Frontier Communications Parent, Inc. All rights reserved.

5 SPECIAL ACCESS (Cont'd)

5.6 Rate Regulations (Cont'd)

5.6.8 Video Digital Transport Service s(Cont'd)

(A) Type I (Cont'd)

(3) Use of Combined Facilities for Temporary Video Digital Transport Service Type I, Broadcast

Temporary Video Digital Transport Service Service may require the use of combined facilities to provide the requested service. Where permanent and nonpermanent facilities are used in tandem to provide a Video service, one-half the nonrecurring charge will apply for the permanent facilities while the full nonrecurring charge will apply for the nonpermanent facilities. The hourly charge for both facilities will be applicable. The Technician Standby charge will only apply to the time the service is provided.

(4) Joint Provisioning of Service

Where more than one Telephone Company is involved in the provisioning of a Temporary Video Digital Transport Service - Type I, such jointly provided facilities are subject to the rules and regulations outlined in Sections 2.7 and 3.3. When the multiple bill option is employed as set forth in Section 2.7.3(B), the rates will apply as follows: When only nonpermanent facilities are used to provision the service and the service is jointly provided, the rates for the Video service will be one-half the nonrecurring charge and one-half the hourly charge. Where permanent facilities are used to provision the Video service and the service is jointly provided, the rates for the service are the entire nonrecurring charge and the entire hourly charge. Where a combination of permanent and nonpermanent facilities are used in the joint provisioning of the service, the rates for the Video service will be one-half the nonrecurring charge for the permanent and nonpermanent facilities and one-half the hourly charge for the nonpermanent facilities and the entire hourly charge for the permanent facilities.

When a single bill option is employed as set forth in Section 2.7.3(A), the rates will apply as follows: Where any combination of permanent and nonpermanent facilities are used to jointly provide the service, the entire nonrecurring charge and the entire hourly charge will apply.

The entire Technician Standby charge will be applied to the time the service is provided under either a single bill option or a multiple bill option.

© 2022 Frontier Communications Parent, Inc. All rights reserved.

5 SPECIAL ACCESS (Cont'd)

5.6 Rate Regulations (Cont'd)

5.6.8 Video Digital Transport Services (Cont'd)

(B) Type II

(1) Rate Application

(a) Standard Arrangements

(1) Video Digital Transport Service - Up to 45 Mbps

(2)

The rates and charges for Video Digital Transport Service - Up to 45 Mbps are time sensitive and applied based on the duration of the video connection. Only one level of charge will apply to continuous usage, either minute sensitive, daily, weekly or monthly. In no event will the charge for continuous video usage exceed the rate for the next higher time frame level of usage.

For example, for two days of continuous usage, two times the daily rate would apply. For three days, the weekly rate is applicable since three times the daily rate exceeds the weekly rate.

The rates set forth under 5.7.4(B)(1)(a) apply for each segment between the customer location and the hub.

Video Digital Transport Service - Up to 45 Mbps is offered under a 1, 3 or 5 year plan at rates set forth under 5.7.4(B)(3)(a).

(2) Video Digital Transport Service - 270 Mbps #

(a) General

Video Digital Transport Service - 270 Mbps is offered as a switched configuration or a dedicated (non-switched) configuration. The switched configuration may be a point-to-point or multi-point arrangement that terminates on ports of the Telephone Company's video switch. The dedicated arrangement is a point-to-point service for the transmission of video without accessing the Telephone Company's video switch.

Service availability limited. Refer to # footnote on Page 5-17.

© 2022 Frontier Communications Parent, Inc. All rights reserved.

5 SPECIAL ACCESS (Cont'd)

5.6 Rate Regulations (Cont'd)

5.6.8 Video Digital Transport Services (Cont'd)

(B) Type II (Cont'd)

(1) Rate Application (Cont'd)

(a) Standard Arrangements (Cont'd)

(2) Video Digital Transport Service - 270 Mbps # (Cont'd)

(a) General (Cont'd)

Video Digital Transport Service - 270 Mbps is available under a month-to-month arrangement, term commitment plan of 1, 2, 3 or 5 years, or on a daily basis. The month-to-month offering requires a minimum service period of three months. In addition, with the exception of daily rates, for the switched configuration there are two volume tier levels used in determining applicable rates, 1-4 switched access line connections and 5 or more line connections between the same locations. When ordering additional connections, the customer must advise the Telephone Company of the number of existing connections at the location.

Video Digital Transport Service 270 Mbps is provided via fiber optic or other compatible facilities. Where appropriate facilities are not available, Special Construction charges may apply as set forth in Section 3.1.3 preceding to provide such facilities required to meet the customer's request.

(b) Rate Elements

The rate elements for Video Digital Transport Service - 270 Mbps are described as follows:

(1) Switched Video Access Line (SVAL)

The Switched Video Access Line (SVAL) provides for the Video Digital Transport Service - 270 Mbps line connection between the customer designated locations and its serving wire center. The SVAL includes the appropriate video-enabling equipment, circuit equipment, and outside plant facilities to access the customer's serving wire center. The standard SVAL arrangement defines the technical characteristics associated with the type of facilities with which the video service will interconnect and the type of signaling capability, if any. The SVAL includes any video encoding device that may be necessary to provide the service if any is required.

The SVAL is available on a unidirectional or bi-directional basis.

Service availability limited. Refer to # footnote on Page 5-17

© 2022 Frontier Communications Parent, Inc. All rights reserved.

5 SPECIAL ACCESS (Cont'd)

5.6 Rate Regulations (Cont'd)

5.6.8 Video Digital Transport Services (Cont'd)

(B) Type II (Cont'd)

(1) Rate Application (Cont'd)

(a) Standard Arrangements (Cont'd)

(2) Video Digital Transport Service - 270 Mbps #(Cont'd)

(b) Rate Elements (Cont'd)

(2) Switched Video Port

The Switched Video Port is the rate element that provides for the connection of an SVAL to the Telephone Company's video network switch. The Switched Video Port rate is applied per SVAL on a unidirectional or bi-directional basis as determined by the directionality of the SVAL associated with the port.

Service availability limited. Refer to # footnote on Page 5-17.

© 2022 Frontier Communications Parent, Inc. All rights reserved.

5 SPECIAL ACCESS (Cont'd)

5.6 Rate Regulations (Cont'd)

5.6.8 Video Digital Transport Services (Cont'd)

(B) Type II (Cont'd)

(1) Rate Application (Cont'd)

(a) Standard Arrangements (Cont'd)

(2) Video Digital Transport Service - 270 Mbps # (Cont'd)

(b) Rate Elements (Cont'd)

(3) Dedicated Video Line

The Dedicated Video Line (DVL) provides for a non-switched Video Digital Transport Service - 270 Mbps line connection between the customer dedicated location and its serving wire center for the purpose of point-to-point video transmission without connecting to a Telephone Company video switch.

(4) Video Digital Transport Service - 270 Mbps Transport

The Video Digital Transport Service - 270 Mbps Transport rate element provides for the interoffice transmission facilities for service arrangements where the customer designated locations are not served by the same wire center and/or for switched video arrangements for interoffice transmission facilities between the serving wire center of the customer designated location and the video switch. Where a service is provided by more than one company, transport will be measured to the meet point as set forth under Section 3.3. Transport rates are applied under two rate elements, a per airline mile rate component and a fixed mileage component for each 20 miles of transport or fraction thereof.

(5) Optional Features - Video Digital Transport Service 270Mbps

(a) Audio

Audio channels are offered as an unbundled optional feature for Video Digital Transport Service - 270 Mbps, as not all 270 Mpbs video service arrangements require audio. Audio is provided in pairs of stereo channels.

Service availability limited. Refer to # footnote on Page 5-17.

© 2022 Frontier Communications Parent, Inc. All rights reserved.

5 SPECIAL ACCESS (Cont'd)

5.6 Rate Regulations (Cont'd)

5.6.8 Video Digital Transport Services (Cont'd)

(B) Type II (Cont'd)

(1) Rate Application (Cont'd)

(a) Standard Arrangements (Cont'd)

(2) Video Digital Transport Service – 270 Mbps # (Cont'd)

(b) Rate Elements (Cont'd)

(5) Optional Features - Video Digital Transport Service - 270 Mbps (Cont'd)

(b) Alternate Switching - Manual

Alternate Switching-Manual provides the customer the ability to call the Video Transmission Center (VTC) and request a video technician to establish or switch up a connection to another location. This optional feature is available at the rate set forth under 5.7.4(B)(2)(b) and applies on a per switching event basis.

(c) Conversion Services -

Conversion services are offered to handle compatibility requirements between the end points of a video circuit. There are two conversion options available, - Format Conversion and Codec Conversion.

(1) Format Conversion provides for analog to digital, digital to analog, composite to component, component to composite, serial digital to composite, serial digital to component, composite to serial digital and component to serial digital conversions, as may be required.

(2) Codec Conversion provides codec compatibility between the end points of the video circuit.

(d) Interhub Arrangement

An interhub arrangement provides for the connection of a Video Digital Transport Service between video hub wire centers or from a video hub wire center to a meet point.

Rates are applied per mile between the video hubs or from a hub to a meet point and per port for each hub connection.

Service availability limited. Refer to # footnote on Page 5-17.

I

© 2022 Frontier Communications Parent, Inc. All rights reserved.

5 SPECIAL ACCESS (Cont'd)

5.6 Rate Regulations (Cont'd)

5.6.8 Video Digital Transport Services (Cont'd)

(B) Type II (Cont'd)

(1) Rate Application (Cont'd)

(a) Standard Arrangements (Cont'd)

(3) Video Digital Transport Service □□- TV1-Analog

(a) General

Video Digital Transport Service □□- TV1-Analog is offered as a switched configuration or a dedicated (non-switched) configuration. The switched configuration may be a point-to-point or multi-point arrangement that terminates on ports of the Telephone Company's video switch. The dedicated arrangement is a point-to-point service for the transmission of video without accessing the Telephone Company's video switch.

Video Digital Transport Service □□- TV1-Analog is available under a month-to-month arrangement, term commitment plan of 1, 2, 3 or 5 years, or on a part-time basis. The month-to-month offering requires a minimum service period of three months.

Where appropriate facilities are not available, Special Construction charges may apply as set forth in Section 3.1.3 preceding to provide such facilities required to meet the customer's request.

© 2022 Frontier Communications Parent, Inc. All rights reserved.

5 SPECIAL ACCESS (Cont'd)

5.6 Rate Regulations (Cont'd)

5.6.8 Video Digital Transport Service (Cont'd)

(B) Type II (Cont'd)

(1) Rate Application (Cont'd)

(a) Standard Arrangements (Cont'd)

(3) Video Digital Transport Service □□- TV1-Analog (Cont'd)

(b) Rate Elements

The rate elements for Video Digital Transport Service TV1-Analog are described as follows:

(1) Switched Video Access Line (SVAL)

The Switched Video Access Line (SVAL) provides for the Video Digital Transport Service □- TV1-Analog line connection between the customer designated locations and its serving wire center. The SVAL includes the appropriate video-enabling equipment, circuit equipment, and outside plant facilities to access the customer's serving wire center. The standard SVAL arrangement defines the technical characteristics associated with the type of facilities with which the video service will interconnect and the type of signaling capability, if any. The SVAL includes any video encoding device that may be necessary to provide the service if any is required.

The SVAL is available on a undirectional or bidirectional basis and is applied on a First and Additional (at same location) SVAL basis.

(2) Switched Video Port

The Switched Video Port is the rate element that provides for the connection of an SVAL to the Telephone Company's video network switch. The Switched Video Port rate is applied per SVAL on a First and Additional port basis as associated with a First or Additional SVAL.

© 2022 Frontier Communications Parent, Inc. All rights reserved.

5 SPECIAL ACCESS (Cont'd)

5.6 Rate Regulations (Cont'd)

5.6.8 Video Digital Transport Services (Cont'd)

(B) Type II (Cont'd)

(1) Rate Application (Cont'd)

(a) Standard Arrangements (Cont'd)

(3) Video Digital Transport Service - TV1-Analog

(b) Rate Elements (Cont'd)

(3) Dedicated Video Line

The Dedicated Video Line (DVL) provides for a non-switched Video Digital Transport Service - TV1-Analog line connection between the customer dedicated location and its serving wire center for the purpose of point-to-point video transmission without connecting to a Telephone Company video switch.

(4) Video Digital Transport Service – TV1-Analog Transport

The Video Digital Transport Service – TV1-Analog Transport rate element provides for the interoffice transmission facilities for service arrangements where the customer designated locations are not served by the same wire center and/or for switched video arrangements for interoffice transmission facilities between the serving wire center of the customer designated location and the video switch. Where a service is provided by more than one company, transport will be measured to the meet point as set forth under Section 3.3. Transport rates are applied under two rate elements, a per airline mile rate component and a fixed mileage component for each 20 miles of transport or fraction thereof.

(5) Optional Features - Video Digital Transport Service – TV1-Analog

(a) Audio

One or two audio channels are provided with each TV1-Analog arrangement. Additional audio channels, up to two more, are available at the customer's option, at rates set forth under 5.7.4(B)(2)(b)(1).

© 2022 Frontier Communications Parent, Inc. All rights reserved.

5 SPECIAL ACCESS (Cont'd)

5.6 Rate Regulations (Cont'd)

5.6.8 Video Digital Transport Services (Cont'd)

(B) Type II (Cont'd)

(1) Rate Application (Cont'd)

(a) Standard Arrangements (Cont'd)

(3) Video Digital Transport Service - TV1-Analog

(b) Rate Elements (Cont'd)

(5) Optional Features - Video Digital Transport Service - TV1-Analog (Cont'd)

(b) Alternate Switching – Manual

Alternate Switching-Manual provides the customer the ability to call the Video Transmission Center (VTC) and request a video technician to establish or switch up a connection to another location. This optional feature is available at the rate set forth under 5.7.4(B)(2)(b)(2) and applies on a per switching event basis.

(c) Conversion Services

Conversion services are offered to handle compatibility requirements between the end points of a video circuit. There are two conversion options available, Format Conversion and Codec Conversion.

(1) Format Conversion provides for analog to digital, digital to analog, composite to component, component to composite, serial digital to composite, serial digital to component, composite to serial digital and component to serial digital conversions, as may be required.

(2) - Codec Conversion provides codec compatibility between the end points of the video circuit.

(d) Interhub Arrangement

An Interhub Arrangement provides for the connection of a Video Digital Transport Service between video hub wire centers or from a video hub wire center to a meet point.

Rates are applied per mile between the video hubs or from a hub to a meet point and per port for each hub connection.

© 2022 Frontier Communications Parent, Inc. All rights reserved.

5 SPECIAL ACCESS (Cont'd)

5.6 Rate Regulations (Cont'd)

5.6.8 Video Digital Transport Services (Cont'd)

(B) Type II (Cont'd)

(1) Rate Application (Cont'd)

(b) Term Commitment Plan (TCP)##

(1) General

Video Digital Transport Service Type II is available under a Term Commitment Plan (TCP).

Video Digital Transport Service - Up to 45 Mbps is offered under a 1, 3 or 5 year plan at rates set forth under 5.7.4(B)(3)(a). Video Digital Transport Service - 270 Mbps # and TV1-Analog are offered under a 1, 2, 3 or 5 year plan at rates set forth under 5.7.4(B)(3)(b).and (c), respectively.

(a) The customer must designate on the ASR the commitment term selected.

(b) Three year and five year rates will be equal to or less than the one year rates.

(c) Inside moves in accordance with 5.6.4 will not incur termination liability charges.

(d) Outside moves in accordance with 5.6.4(B)(2) will allow the customer to retain the same TCP period. Any other move will be treated as a disconnect of the service and termination liability charges will apply.

Service availability limited. Refer to # footnote on Page 5-17.

Effective November 21, 2017, new subscriptions to Term Commitment Plan is no longer permitted. TCP customers subscribed as of November 21, 2017 may continue with their existing subscriptions. If at any time an existing customer terminates its TCP, the customer may not re-subscribe to the plan.

© 2022 Frontier Communications Parent, Inc. All rights reserved.

5 SPECIAL ACCESS (Cont'd)

5.6 Rate Regulations (Cont'd)

5.6.8 Video Digital Transport Services (Cont'd)

(B) Type II (Cont'd)

(1) Rate Application (Cont'd)

(b) Term Commitment Plan (TCP)## (Cont'd)

(2) Change in Term Length

Prior to the completion of the selected TCP term, the customer may elect to convert to a new TCP of the same or different term length subject to the following:

- No term credit is applied for payments made under the original plan.

- If the new term selected is shorter than the time remaining under the existing TCP, the change to the new TCP constitutes a disconnect of the existing TCP and termination liability charges will apply.

(3) Renewal Options

(a) At the expiration of a TCP period, the Telephone Company will automatically renew the service at the same TCP period unless the customer chooses to convert to month-to-month or time sensitive billing, or discontinue service.

(b) Conversion to a different TCP period will require the customer to submit a change order ASR. Conversion to a different TCP period will be allowed without application of any nonrecurring or ordering charges.

(c) Conversion to standard arrangement rates (month-to-month or time sensitive) will be treated as a disconnect of service and establishment of new service. If no other changes are ordered, no NRCs will apply.

(4) Notification of Discontinuance

An ASR for discontinuance of a TCP arrangement must be received by the Telephone Company at least thirty (30) business days prior to actual disconnect of service. Monthly charges will apply for a period of thirty (30) business days from the date the Telephone Company receives disconnect notification or until the requested disconnect date if longer than thirty (30) business days. (C) (C)

Service availability limited. Refer to ## footnote on Page 5-73.

© 2024 Frontier Communications Parent, Inc. All rights reserved.

5 SPECIAL ACCESS (Cont'd)

5.6 Rate Regulations (Cont'd)

5.6.8 Video Digital Transport Services (Cont'd)

(B) Type II (Cont'd)

(1) Rate Application (Cont'd)

(b) Term Commitment Plan (TCP)## (Cont'd)

(5) Upgrade to a Digital Service

During a TCP period, customers may elect to upgrade from a Video Digital Transport Service Type II TV-1 Analog service to either a Video Digital Transport Service Type II Up-to-45Mbps or a Video Digital Transport Service Type II 270Mbps Unidirectional digital arrangement provided by the Telephone Company. Termination liability will be waived, subject to the upgrade meeting all of the following conditions:

- The upgraded service will be subject to all appropriate nonrecurring charges.
- The upgraded service remains connected at the same customer designated locations (CDL).
- The term length of the replacing digital arrangement is equal to or longer than the term length of the Video Digital Transport Service Type II TV-1 Analog service.

Service availability limited. Refer to ## footnote on Page 5-73.

© 2022 Frontier Communications Parent, Inc. All rights reserved.

5 SPECIAL ACCESS (Cont'd)

5.6 Rate Regulations (Cont'd)

5.6.8 Video Digital Transport Services (Cont'd)

(B) Type II (Cont'd)

(1) Rate Application (Cont'd)

(b) Term Commitment Plan (TCP)## (Cont'd)

(6) Termination Liability

When a TCP arrangement is discontinued prior to the end of the commitment period, termination liability charges, as set forth following, will apply based on the remainder of the TCP period in effect at the time of disconnect.

One Year TCP - 50% of any remaining portion of the first year's recurring charges.

Two Year TCP - 50% of any remaining portion of the first year's recurring charges. In addition, for any remaining portion of the second year, the customer will be liable for 10% of the total monthly recurring charges in that time period.

Three Year TCP - 50% of any remaining portion of the first year's recurring charges. In addition, for any remaining portion of the second and third years, the customer will be liable for 10% of the total monthly recurring charges in that time period.

Five Year TCP - 50% of any remaining portion of the first year's recurring charges. In addition, for any remaining portion of the second through fifth years, the customer will be liable for 20% of the total monthly recurring charges in that time period.

(7) Termination Without Liability

During a TCP period, should the currently effective rates for a customer's service increase, the customer may, at their option, terminate the TCP arrangement without penalty or liability.

During a TCP period, customers may upgrade analog service, subject to Section 5.6.8(B)(1)(b)(5) preceding, without termination liability.

Service availability limited. Refer to ## footnote on Page 5-73.

© 2022 Frontier Communications Parent, Inc. All rights reserved.

5 SPECIAL ACCESS (Cont'd)

5.6 Rate Regulations (Cont'd)

5.6.8 Video Digital Transport Services (Cont'd)

(B) Type II (Cont'd)

(2) Shared Use of Videoband Service - Type II/ Video Digital Transport Service

Multiple users may share a Videoband - Type II/ Video Digital Transport Service connection from a specific customer site to a video carrier's location. The Telephone Company will bill the usage to the customer who requests the video connection.

(3) Availability of Videoband Service - Type II/ Video Digital Transport Service

The Telephone Company does not guarantee the availability of access facilities to serve all customers for all possible simultaneous video connection requirements. Customer access will be provided on a first-come, first-serve basis.

© 2022 Frontier Communications Parent, Inc. All rights reserved.

5 SPECIAL ACCESS (Cont'd)

5.6 Rate Regulations (Cont'd)

5.6.8 Video Digital Transport Services (Cont'd)

(B) Type II (Cont'd)

(4) Use of Video Digital Transport Service - Type II Facilities for Other Than Video Transport

Type II facilities are designed for the express use of Type II video connections. Use of these facilities for transmission of other than video and the associated audio signals, by the customer, may result in interference or impairment of telephone company facilities and will be subject to the provisions in Section 2.2.2.

5.6.9 Special Access Surcharge

Pending the development of techniques to accurately measure usage of local facilities which are interconnected by users by means of interstate or foreign telecommunications, a surcharge of $25.00 per service per month will be assessed to a two point Special Access Service, and to each additional Special Access Line when the service is configured as multipoint. The Special Access Surcharge will also be assessed upon Wideband Analog, High Capacity Digital and FT1 Services on a voiceband equivalent basis. The voiceband equivalency for these type services is as follows:

- High Capacity DS1 equates to 24 Voiceband Facilities
- High Capacity DS1C equates to 48 Voiceband Facilities
- High Capacity FiberConnect equates to a maximum of 96 Voiceband Facilities
- High Capacity DS3 equates to 672 Voiceband Facilities
- High Capacity DS3C equates to 1344 Voiceband Facilities
- Wideband Group equates to 12 Voiceband Facilities
- Wideband Supergroup equates to 60 Voiceband Facilities
- Wideband Mastergroup equates to 600 Voiceband Facilities
- Each 56 Kbps or 64 Kbps channel in a FT1 Service equates to one Voiceband Facility.
- High Capacity E1 equates to 30 Voiceband Facilities

The Special Access Service will be exempted from the monthly surcharge if the customer provides the Telephone Company written certification that the termination is one of the following:

(1) The open end termination (dial tone end) of a Foreign Central Office Line, Common Control Switching Arrangement (or equivalent) or Off Network Access Line (ONAL).

(2) Any termination of an analog circuit used for radio or television program transmission.

(3) Any termination of a line used for telex service.

(4) Any termination of a line by nature of its operating characteristics and nature of connection could not make use of common lines.

(5) Any line termination, other than (1) through (4) preceding, which is subject to the following charges: (a) Carrier Common Line, (b) End Office Switching, and (c) Switched Transport.

(6) A termination that the customer certifies to the Telephone Company is not connected to a PBX or other device capable of interconnecting the Special Access Service to the local network. If the PBX or other device has been configured either through software programming or physical restrictions not to access the local network, then the customer may file the surcharge exemption for the Special Access Service terminating on this equipment.

© 2022 Frontier Communications Parent, Inc. All rights reserved.

5 SPECIAL ACCESS (Cont'd)

5.6 Rate Regulations (Cont'd)

5.6.9 Special Access Surcharge (Cont'd)

In order for the Telephone Company to determine the application of the surcharge with respect to specific services, the customer must report the intended use of all services when placing ASRs for Special Access Service. In addition, when ordering High Capacity Analog or Digital services, the customer must report the use for each voice equivalent circuit of the high capacity service. When any circuit is reported wholly used in any manner described in (1) through (6) preceding, the surcharge will not apply. If the intended use is not reported, the surcharge will apply.

If, at any time after the installation of a service which is subject to the surcharge, the customer reports that the service is being used consistently with any exception listed above, the Telephone Company will credit the customer for the surcharge. Credit will not be given beyond the receipt date of the certification for exemption.

5.6.10 Message Station Equipment Recovery Charge

Message Station Equipment Recovery Charge is a charge to recover that portion of message station equipment which is assigned to Special Access Service. Since there is zero cost assigned to Message Station Equipment Recovery in Special Access the charge is $.00.

5.6.11 DS3 High Capacity Service*

(A) DS3 Rate Structure

A DS3 (44.736Mbps) High Capacity SAL, whether an Individual, 3-System or Unlimited System, may be purchased with or without electronics. When a SAL is ordered with electronics the Telephone Company will place electronics at both the CDL and the serving wire center. When a SAL is ordered without electronics the Telephone Company will only place electronics at the serving wire center and not at the CDL. Effective May 18th 2002 when a DS3 SAL is ordered without electronics the interface must be optical unless an Additional SAL is added to an existing System with an electrical interface. When ordered with electronics the interface may be electrical or optical.

DS3 SALs are non-distance sensitive and are provided on a protected basis.

A Minimum Period charge applies to a DS3 (44.736Mbps) High Capacity SAL, whether an Individual, 3-System, Unlimited System or Group System. The minimum period for High Capacity DS3 Service is that period requested by the customer as set forth in Section 5.6.11 (B) following. The minimum period for a Month to Month Rated DS3 is 12 months. When a DS3 service is discontinued prior to the end of the minimum period, the customer will be liable for the total monthly charges for the remaining portion of the applicable minimum period. This charge will be based on the rates in effect at the time of disconnect. (N) (N)

Individual System

An Individual System is a single DS3 between a CDL and the serving wire center. The appropriate NRC is applied per SAL..

Transport rate elements are applied per SAL when transport between offices is required. In instances when a SAL is ordered to a second CDL in conjunction with an Individual System SAL and Transport between offices is required Transport rate elements are applied per circuit.

* High Capacity DS1 and DS3 services may be provided between service areas shown under 5.2.7(H), where facilities and conditions permit.

© 2022 Frontier Communications Parent, Inc. All rights reserved

5 SPECIAL ACCESS (Cont'd)

5.6 Rate Regulations (Cont'd)

5.6.11 DS3 High Capacity Service* (Cont'd)

(A) DS3 Rate Structure (Cont'd)

3-System##

The 3-System allows the same customer, between the same CDL and the serving wire center, to order additional DS3 SALs, up to a maximum of two. Additional SALs may only be added with the same interface, electrical or optical, and with Telephone Company electronics or without Telephone Company electronics as the First System. The appropriate NRC is applied per SAL.

Transport rate elements are applied per SAL when transport between offices is required. In instances when a SAL is ordered to a second CDL in conjunction with a 3-System SAL and Transport between offices is required Transport rate elements are applied per circuit.

Unlimited System##

The Unlimited System allows the same customer, between the same CDL and the serving wire center, to order additional DS3 SALs, with no maximum. Additional SALs may only be added with the same interface, electrical or optical, and with Telephone Company electronics or without Telephone Company electronics as the First System. The appropriate NRC is applied per SAL.

Transport rate elements are applied per SAL when transport between offices is required. In instances when a SAL is ordered to a second CDL in conjunction with an Unlimited System SAL and Transport between offices is required Transport rate elements are applied per circuit.

Group Systems##

Group System DS3s are limited to those services so equipped and in service as of March 4, 1999. Group System DS3s provide a total capacity of 12 (DS3 x 12) or 24 (DS3 x 24) DS3 SALs. All DS3s in a Group System must be between the same CDL and serving wire center.

* High Capacity DS1 and DS3 services may be provided between service areas shown under 5.2.7(H), where facilities and conditions permit.

Effective November 21, 2017, new subscriptions to DS3 3-System and Unlimited System are no longer permitted. DS3 3-System and Unlimited System customers subscribed as of November 21, 2017 may continue with their existing subscriptions. If at any time an existing customer terminates its DS3 3-System and Unlimited System, the customer may not re-subscribe to the plan.

© 2022 Frontier Communications Parent, Inc. All rights reserved

5 SPECIAL ACCESS (Cont'd)

5.6 Rate Regulations (Cont'd)

5.6.11 DS3 High Capacity Service (Cont'd)

(A) DS3 Rate Structure (Cont'd)

A DS3 SAL provides a spare transmission path (transmit and receive) connected to an automatic protection switch. In the event of failure in the primary service, traffic will be automatically transferred to the spare transmission facilities. The spare transmission path will normally be provided on the same route as the primary path. When a customer orders a DS3 SAL, the customer may request that the spare transmission path be provided via an alternate route provisioned as the Telephone Company may elect. If common points for the primary and alternate route become necessary, these points will be identified by the Telephone Company and provided to the ordering customer. Should the routing arrangement require special routing requirements specified by the customer, other rates and regulations as set forth in Section 9 or Section 10 may be applicable.

A customer may order the same or different type of DS3 SALs for each CDL(s) at which DS3 service is terminated.

When a customer requests the disconnect of a DS3 service in the 3 System DS3 or Unlimited System DS3, an Additional System DS3 SAL must be disconnected first. When only the First DS3 service exists, that service will be disconnected.

Any costs associated with Special Construction as set forth in Section 3.1.3 preceding may apply.

DS3 Special Transport contains two rate elements, Special Transport Termination and Special Transport Facility. Special Transport Termination rates apply for the termination of each end of the interoffice facility. Special Transport Facility rates apply for each airline mile of the interoffice facility. Group System DS3* Transport Terminations (DS3 x 12 and DS3 x 24) and Group System DS3* Transport Facilities are only available when connected to at least one DS3 Group System* SAL of the same level (12 or 24). In addition, the Special Transport Facility and Special Transport Termination rates apply per DS3 Group of 12 or 24.*

* Limited to those services so equipped and in service as of March 4, 1999.

© 2022 Frontier Communications Parent, Inc. All rights reserved

5 SPECIAL ACCESS (Cont'd)

5.6 Rate Regulations (Cont'd)

5.6.11 DS3 High Capacity Service (Cont'd)

(B) Service Periods #

Individual DS3s and System DS3s are offered under four service periods, each with different rate levels. The service periods are 1, 3, 5 and 7 years. The customer must specify the service period at the time the service is ordered. First and Additional DS3 SALs (3 System DS3s and Unlimited System DS3s) can have a different service period. However, each DS3 SAL of a two-point DS3 service must have the same service period.

(C)

(C) Expiration of Service Period # and ##

At the expiration of a service commitment period, all DS3 services will convert to the Individual System Month to Month Rate.

Material omitted from this page now appears on Page 5-74.1.

Effective November 19, 2021, DS3 Service Periods are no longer permitted. DS3 Service Periods in effect as of November 19, 2021 may continue the existing term but will not be eligible to extend, renew, reenroll in, convert to a new service period, or in any other way continue their existing plan beyond its current expiration. At expiration of the service period, the service will convert to the Month to Month Rate. If at any time an existing customer terminates its DS3 Service Period, the customer may not re-subscribe to the rate.

Effective July 26, 2022 any DS3 Service billing at the Month to Month rate will convert to the DS3 Individual System Month to Month rate. In addition, at the expiration of a service period, the DS3 service will convert to the Individual System Month to Month rate. (N)

© 2022 Frontier Communications Parent, Inc. All rights reserved

5 SPECIAL ACCESS (Cont'd)

5.6 Rate Regulations (Cont'd)

5.6.11 DS3 High Capacity Service (Cont'd)

Reserved for future use (C)

© 2024 Frontier Communications Parent, Inc. All rights reserved

5 SPECIAL ACCESS (Cont'd)

5.6 Rate Regulations (Cont'd)

5.6.11 DS3 High Capacity Service (Cont'd)

(E) Discontinuance With Liability - DS3 Service Period (C)

When a DS3 service is discontinued prior to the end of the service period, the customer will be liable for a percentage of the total monthly charges for the remaining portion of the applicable service period. This charge will be based on the rates in effect at the time of disconnect. There are two liability periods for DS3 service, "first liability period" and "subsequent liability period". The "first liability period" is the period beginning from the establishment of the DS3 and is based on the customer's initial commitment term for the DS3. The "subsequent liability period" is the period after the customer's initial commitment term has expired and the customer wants to renew the DS3 service with the existing term period or select a new DS3 term period. The customer's total liability for the "first liability period" or "subsequent liability period" is dependent upon the number of months remaining within the year that the service is discontinued times the liability rate for that year plus the total monthly charges for each annual period remaining in the "first liability period" or "subsequent liability period" times the applicable liability rate. The liability rates for each year of the service period are as follows:

Year In Which Service Is Discontinued	1st Liability Period Rate	Subsequent Liability Period Rate
1	45%	20%
2	30%	20%
3	25%	20%
4	20%	20%
5	20%	20%
6	20%	20%
7	20%	20%

For example. if a customer with a first liability period of seven years discontinues the DS3 service after six months within the 4th year, the customer will be liable for 20% of the total monthly charges for six months, 20% of the total monthly charges for the 6th year and 20% of the total monthly charges for the 7th year.

For example, if DS3 service is disconnected during the subsequent seven year liability period, the customer will be liable for 20% of the total monthly charges for the remaining months for each annual period remaining in the seven year service period.

Customers with a service period arrangement of three years or greater established on or prior to September 17, 1992, who discontinue service are eligible for limitation of the termination liability as set forth below.

Customer liability will be calculated as previously stated but will be limited to:

The dollar difference between 1) the amount the customer has already paid and, 2) any additional charges that the customer would have paid for service if the customer had taken a shorter term offering corresponding to the term actually used.

For example, if a customer with a seven year service period discontinues service six months after the end of the third year, the customer liability will not exceed:

(Three year monthly rate - Seven year monthly rate) x 42 months (C)

© 2022 Frontier Communications Parent, Inc. All rights reserved

5 SPECIAL ACCESS (Cont'd)

5.6 Rate Regulations (Cont'd)

5.6.11 DS3 High Capacity Service (Cont'd)

(F) Notification of Discontinuance

Notice of discontinuance must be given by the customer at least thirty business days prior to actual discontinuance. Monthly charges will apply for a period of thirty business days from the date the Company receives discontinuance notification or until the requested discontinuance date, if longer than thirty (30) business days. (C) (C)

(G) Upgrade to Higher Speed Service

Customers may elect to upgrade DS3 service(s) to a higher speed during a first liability period or subsequent liability period. The higher capacity system requires the Individual System Month to Month Rate and a new minimum period. The upgraded service will be subject to all appropriate NRCs.

If the following conditions exist, no termination liabilities will be applied:

- Both the existing and the new services are provided solely by the Company.
- The order to discontinue a service at an existing speed or capacity and the order for the upgraded service are received by the Company at the same time.
- The new service will be provided at the same customer location(s) as the discontinued service.
- The fixed-period plan for the upgraded service(s) meets or exceeds the remaining length of the existing fixed-period plan, except where an equal to or longer fixed-period plan is not available, in which case the longest fixed-period plan must be selected.
- The total monthly rate of the new agreement is equal to or greater than the total monthly rate of the existing agreement period.
- The monthly rates for the upgraded services and/or service elements will be those in effect at the time of the service upgrade. The upgraded service will be subject to all appropriate nonrecurring charges.
- Termination liability charges will not apply as long as the upgraded service remains connected at the same point of termination(s) or meets the requirements set forth in Section 5.6.4(B)2.

© 2024 Frontier Communications Parent, Inc. All rights reserved

5 SPECIAL ACCESS (Cont'd)

5.6 Rate Regulations (Cont'd)

5.6.11 DS3 High Capacity Service (Cont'd)

(H) DS3 Multiplexer Cross Connect Arrangement

The DS3 Multiplexer Cross Connect Arrangement allows a customer to (1) cross connect digital DS-1 channels from a DS3 Multiplexer to another DS3 Multiplexer or (2) to cross connect digital DS1 channels from a DS3 Multiplexer to an OC-3 CO-Node purchased from Section (20). When the DS3 Multiplexer Cross Connect is applied between a DS3 Multiplexer and an OC-3 CO-Node, applicable Section (20) rate elements are applied in addition to the DS3 Multiplexer Cross Connect. If the DS3 multiplexer is located in a different hub wire center then the other DS3 multiplexer or OC-3 CO-Node, DS1 special transport will apply in addition to the DS3 Cross Connect charge. The customer must provide the (CFA and SCFA) for both multiplexed services or OC-3 CO-Node on the ASR.

The rate as specified in Section 5.7.15 will apply per cross connect arrangement.

Partitioned Billing Arrangement (PBA)

PBA is a service arrangement that allows System DS3 (3 System, Unlimited System, or Group System*) customers to partition the multiple DS3s to a number of CDLs on the other end of the circuit (see diagram below). All rate elements associated with the PBA must be billed to the same customer.

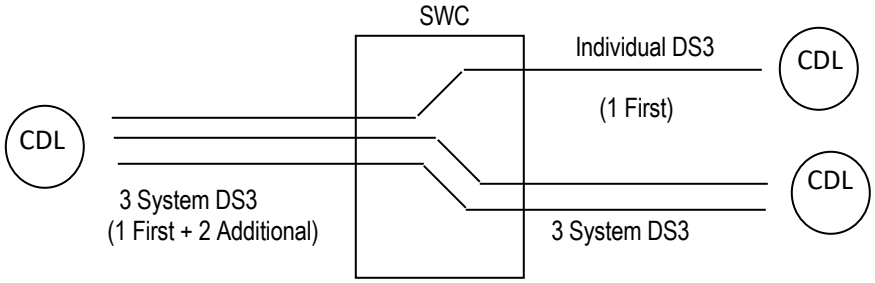

For 3 System DS3s and Unlimited System DS3s ordered under a PBA, each CDL must have a first system SAL. Additional SALs may then be ordered under the normal System terms and conditions.

* Limited to those services so equipped and in service as of March 9, 1999.

© 2022 Frontier Communications Parent, Inc. All rights reserved

5 SPECIAL ACCESS (Cont'd)

5.6 Rate Regulations (Cont'd)

5.6.11 DS3 High Capacity Service (Cont'd)

Partitioned Billing Arrangement (PBA) (Cont'd)

When Group System DS3 Special Transport* is provided as part of a PBA, a Group System DS3 SAL* of the same level (DS3 x 12, DS3 x 24)* must be connected to one end of the Group DS3 Special Transport*. Under a PBA only, DS3 x 12 Group System Special Transport* may be connected to DS3 x 24 Group System Special Transport* at hub wire centers. Also, standard DS3 Special Transport may be connected to either DS3 Group System Special Transport* at hub wire centers. All DS3 Special Transport Terminations apply for each type of DS3 Special Transport.

When ordering a PBA the customer must specify on the ASR the Access Service Group (ASG) and the First System DS3 circuit identification (ECCKT) at both CDLs. Each 3 System DS3 and/or Unlimited System DS3 at a CDL must be ordered as separate PBAs.

Customers with existing DS3 Systems (3 System, Unlimited System, or Group System*) may convert to a PBA. To convert, the customer must issue discontinuance of service ASR(s) for the existing DS3s and establishment of new service ASR(s) for each CDL to be converted to the PBA. If no physical changes to the service(s) are required, no NRCs apply. If any physical changes are required, appropriate NRCs will apply.

* Limited to those services so equipped and in service as of March 9, 1999.

© 2022 Frontier Communications Parent, Inc. All rights reserved

5 SPECIAL ACCESS (Cont'd)

5.6 Rate Regulations (Cont'd)

5.6.12 Optional Payment Plan (OPP)#

(A) General

(1) The terms and conditions specified herein are applicable to FT1, FiberConnect, and DDS services. Additional terms and conditions for FT1 OPP are set forth in 5.6.12(H). Additional terms and conditions for DDS are set forth in 5.6.12.
(2) Only the Special Access Line (SAL) rate element is available under an OPP. All other associated rate elements or additional features are available at the standard month-to-month tariffed rates and regulations.
(3) FT1 OPP SAL rates will not be greater than standard month-to-month SAL rates. FiberConnect is not available on a month-to-month basis.
(4) Three year and five year OPP rates will be equal to or less than the one year OPP rates. Decreases to the one year OPP will flow through to the three year and five-year OPP.
(5) Payment periods of one year, three year, and five years are available to all customers at the applicable rates set forth in 5.7.5(B), 5.7.8 or 5.7.9(B) regardless of when they subscribe to an OPP arrangement.
(6) The customer must designate on the ASR the payment period for the OPP.
(7) Inside moves, provided in accordance with 5.6.4, will not incur termination liability charges.
(8) Outside moves provided in accordance with 5.6.4(B)(2) will allow the customer to retain the same OPP payment period. Any other move will be treated as a disconnect of the service and termination liability charges will apply.

(B) Changes in Length of OPP Period

Prior to the completion of the selected OPP period, the customer may elect to convert to a new OPP period of the same or different length, subject to the following conditions:

- No credit toward the new payment period will be given for payments made under the original OPP arrangement.
- Nonrecurring charges will not be reapplied for existing service(s).
- If the new OPP period is shorter in length than the time remaining under the existing OPP, the change to the new OPP period constitutes a disconnect of the existing OPP service and termination liability charges apply.

Effective November 21, 2017, new subscriptions to Optional Payment Plan is no longer permitted. OPP customers subscribed as of November 21, 2017 may continue with their existing subscriptions. If at any time an existing customer terminates its OPP, the customer may not re-subscribe to the plan.

© 2022 Frontier Communications Parent, Inc. All rights reserved

5 SPECIAL ACCESS (Cont'd)

5.6 Rate Regulations (Cont'd)

5.6.12 Optional Payment Plan (OPP)# (Cont'd)

(C) Renewal Options

(1) At the expiration of an OPP period, the Telephone Company will automatically renew the service at the same OPP period unless the customer chooses to convert to a different OPP period, convert to month-to-month rates (except FiberConnect) or discontinue service.

(2) Conversion to a different OPP period will require the customer to submit a change order ASR. Conversion to a different OPP period will be allowed without application of any nonrecurring or ordering charges.

(3) Conversion to month-to-month rates will be treated as a disconnect of service and establishment of new service. If no other changes are ordered, no NRCs will apply.

Notification of Discontinuance

An ASR for discontinuance of an OPP arrangement must be received by the Telephone Company at least thirty (30) business days prior to actual disconnect of service. Monthly charges will apply for a period of thirty (30) business days from the date the Telephone Company receives disconnect notification or until the requested disconnect date if longer than thirty (30) business days. (C) (C)

(E) Upgrade to Higher Speed Service

Customers may elect to upgrade service(s) to a higher speed during an OPP period, subject to the following conditions:

- The upgraded service will be subject to all appropriate nonrecurring charges.
- Termination liability charges will not apply as long as the upgraded service remains connected at the same point of termination(s) or meets the requirements set forth in 5.6.4(B)(2).
- If the upgrade involves establishing a multiplexing arrangement, termination liability charges will not apply if the hub wire center is the same one associated with the customer designated location.

(F) Termination Liability

When an OPP service is discontinued prior to the end of the period, termination liability charges, as set forth below, will apply based on the remainder of the OPP period in effect at the time of disconnect.

One Year OPP - 50% of any remaining portion of the first year's recurring charges.

Three Year OPP - 50% of any remaining portion of the first year's recurring charges. In addition, for any remaining portion of the second and third years, the customer will be liable for 10% of the total monthly recurring charges in that time period.

Five Year OPP - 50% of any remaining portion of the first year's recurring charges. In addition, for any remaining portion of the second through fifth years, the customer will be liable for 20% of the total monthly recurring charges in that time period.

Service availability limited. Refer to # footnote on Page 5-88.

© 2024 Frontier Communications Parent, Inc. All rights reserved

5 SPECIAL ACCESS (Cont'd)

5.6 Rate Regulations (Cont'd)

5.6.12 Optional Payment Plan (OPP)# (Cont'd)

(G) Reserved for Future Use (C)

(H) OPP for FT1 Service

A customer may change from DS1 OPP service to an FT1 OPP service subject to the following rate applications. Also, a customer may change the number of channels of an N x 56 Kbps or N x 64 Kbps service to another higher value of N (where N = 2, 4 or 6), subject to the following rate applications:

- The changed service will be subject to all appropriate nonrecurring charges.
- Termination liability charges will not apply as long as the changed service remains connected at the same point of termination(s) or meets the requirements of 5.6.4(B)(2).
- If the change involves establishing a multiplexing arrangement, termination liability charges will not apply if the hub wire center is the same one associated with the customer designated location.

Service availability limited. Refer to # footnote on Page 5-88.

© 2024 Frontier Communications Parent, Inc. All rights reserved

5 SPECIAL ACCESS (Cont'd)

5.6 Rate Regulations (Cont'd)

5.6.12 Optional Payment Plan (OPP)# (Cont'd)

OPP for DDS

(1) For conversion of existing month-to-month DDS to an OPP arrangement, the customer will be required to submit a change order ASR to convert to the OPP. No service or billing interruption will occur when a customer converts from month-to-month rates to OPP rates. If no other changes to the service are ordered, no charges will apply.

(2) A customer may upgrade from a DDS OPP to an FT1 OPP subject to the following rate applications:

- The changed service will be subject to all appropriate nonrecurring charges.

- Termination liability charges will not apply as long as the changed service remains connected at the same point(s) of termination or meets the requirements of 5.6.4(B)(2).

Service availability limited. Refer to # footnote on Page 5-88.

© 2022 Frontier Communications Parent, Inc. All rights reserved

5 SPECIAL ACCESS (Cont'd)

5.6 Rate Regulations (Cont'd)

5.6.13 Four-Wire Voiceband and Digital Data Service (DDS) Rate Stability Plan (RSP)# (C)

(A) Description

The Four-Wire Voiceband and DDS RSP will allow customers to stabilize their monthly recurring rates (MRCs) for Four-Wire Voiceband and DDS SALs and associated Voiceband and DDS Special Transport. This service is offered for a fixed service period at the rates specified in Section 5.7.16. The RSP allows customers to select a service commitment period during which the rates will be stabilized. The service commitment periods are 3 years or 5 years, which must be specified in writing at the time of enrollment.

The RSP is available to customers who qualify for the Plan's eligibility requirements and agree to the Plan's terms and conditions.

Customers of the Plan will not be subject to Telephone Company initiated rate increases during their service commitment period. Rate changes may occur as a result of FCC action.

Four-Wire Voiceband and DDS RSP rates will not be greater than standard month-to-month Four-Wire Voiceband and DDS SAL rates and associated Voiceband and DDS Special Transport rates.

(B) Eligibility Requirement

The eligibility requirement for RSP is a minimum combined national commitment level of 500 Four-Wire Voiceband and DDS SALs. These SALs must be interstate services and provided by the GTOCs in their serving areas. Any associated Special Transport is also subject to the terms and conditions of the RSP.

At an annual review, if the customer has committed to more than the minimum number of 500 SALs required, an allowance of minus 2% or plus 5% will be considered as having met the commitment level.

When the customer elects to enroll in an RSP, they must specify, in writing, the enrollment date (which will be the anniversary date) and the commitment level. The specified enrollment date must be within 30 days of receipt by the Telephone Company. By the specified date, the customer must issue ASRs to add SALs to the RSP and/or convert month-to-month SALs to the RSP to fall within the commitment range specified above.

Besides the eligibility requirement, customers of this plan are also subject to the terms and conditions specified in Section 5.6.13(C).

Effective September 7, 2013, new enrollments tor Four-Wire Voiceband and Digital Data Srevice (DDS) Rate Stability Plan (RSP) are no longer permitted. Existing customers with an RSP plan as of September 7, 2013 may continue with their existing plan for the remainder of the commitment period, at which point is it subject to the terms described in (F)(2) below. Existing customers with an RSP-EX plan may continue with their existing plan for the remainder of the commitment period.

© 2022 Frontier Communications Parent, Inc. All rights reserved

5 SPECIAL ACCESS (Cont'd)

5.6 Rate Regulations (Cont'd)

5.6.13 Four-Wire Voiceband and Digital Data Service (DDS) Rate Stability Plan (RSP)# (Cont'd) (C)

(C) RSP Terms and Conditions

(1) Written notice must be submitted by the customer to change the commitment level of SALs. If, as the result of increasing or decreasing the commitment level, service is changed from the RSP to a month-to-month arrangement or from a month-to-month arrangement to the RSP, an ASR will be required within 30 days for all services changed. Only one RSP will be allowed per customer. Penalties for decreasing the commitment level are discussed in 5.6.13(C)(4).

(2) Each customer's RSP will be reviewed annually. The customer will be notified in writing as to the status of the RSP. This notification will inform the customer of any RSP SALs that must be converted. If the customer has increased the number of SALs from the initial commitment beyond the range specified in 5.6.13(B), he will have the option of increasing the commitment level for the remainder of the plan. If the customer chooses not to increase the commitment level of SALs for the remaining year(s) of the plan, he must convert the increased number of SALs to standard month-to-month SALs to a level within the range specified in 5.6.13(B). The customer may decrease the commitment level at the time of the annual review and pay the applicable penalties for the amount of SALs being decreased. The customer will have 30 days from the receipt of this notification to convert SALs.

(3) If a service has two SALs, to include this service as part of the RSP, both SALs must be in the RSP. RSP rates for Special Transport are only applicable when the associated SALs are included in the RSP.

After enrolling in the plan, the customer may add or delete RSP SALs at any time during the plan.

(4) When the number of RSP SALs at the annual review is less than the acceptable commitment range, penalty charges will apply, based on the difference between the commitment level less 2% and the number of RSP SALs in effect at the annual review. For example, if the commitment level is 100 and the customer has 90 RSP SALs at the time of the annual review, the penalties described below will be applied to the difference of 98 (2% less than 100) and 90, which would be 8 in this example.

Service Availability is limited. Refer to # footnote on page 5-92.

© 2022 Frontier Communications Parent, Inc. All rights reserved

5 SPECIAL ACCESS (Cont'd)

5.6 Rate Regulations (Cont'd)

5.6.13 Four-Wire Voiceband and Digital Data Service (DDS) Rate Stability Plan (RSP)# (Cont'd) (C)

(C) RSP Terms and Conditions (Cont'd)

(4) Continued

The penalty charged is equal to the unweighted average of the customer's applicable RSP Four-Wire Voiceband SAL and DDS SAL monthly rates multiplied by the deficient number of SALs.

Example:

Customer has Four-Wire Voiceband and DDS services in California, and Illinois. RSP rates for these jurisdictions are as follows: (C)

	Effective RSP Rate			
Type SAL	California WC		Illinois	(C)
Four-Wire Voiceband	$47.88		$28.15	(C)
DDS (2.4, 4.8, 9.6, 19.2 Kbps)	63.84		52.25	(C)
DDS (56, 64 Kbps)	79.80		64.60	(C)
Totals	$191.52	+	$145.00 = $336.52	

UNWEIGHTED AVERAGE OF RSP RATES: $519.57) 9 = $57.73

Review of customer's records reveals commitment deficiency of eight SALs. The applicable penalty charged would be $57.73 x 8 = $460.24.

RSP Nonrecurring Charges

No nonrecurring charge will apply for the ASRs processed to convert existing SALs to or from the RSP. All applicable Special Access NRCs will apply for ASRs processed to add new SALs. Refer to Section 5.7.2 for Voiceband SAL NRCs and Section 5.7.5 for Digital Data Service SAL NRCs.

(E) RSP Services

This Plan is offered only for Four-Wire Voiceband and Digital Data Service (DDS).

Service Availability is limited. Refer to # footnote on page 5-92.

© 2022 Frontier Communications Parent, Inc. All rights reserved

5 SPECIAL ACCESS (Cont'd)

5.6 Rate Regulations (Cont'd)

5.6.13 Four-Wire Voiceband and Digital Data Service (DDS) Rate Stability Plan (RSP)# (Cont'd) (C)

(F) RSP Application

(1) Rate Elements Subject to the Plan

The RSP stabilizes the MRCs for Four-Wire Voiceband SALs, DDS SALs, and their associated Voiceband and DDS Special Transport MRCs. The MRCs for these rate elements will not be increased by initiation of the Telephone Company from the rates in effect as of the RSP enrollment date for the duration of the service commitment period. The RSP enrollment date is the date on which the RSP customer signs a written agreement for RSP and otherwise meets the Plan's eligibility requirements.

All RSP customers will pay the same RSP rate at any given point in time. However, each RSP customer will have only one RSP enrollment date, which will apply to all of the customer's rate elements subject to the Plan. This is regardless of whether services were existing and converted to the RSP, added at the time of enrollment, or added subsequently during the RSP service commitment period.

Before the expiration of a customer's RSP service commitment period, the RSP may be replaced by a new RSP at the tariffed rates currently in effect. The customer will not incur any penalties associated with their current plan if the elected service period is equal to or greater than the time remaining on the current RSP. For any new services added to the Plan, the MRCs will be at the rate in effect when the customer elects the new plan. However, billing for these services will not begin until the services have been installed.

The RSP does not apply to NRCs associated with Four-Wire Voiceband and DDS, supplemental features and multiplexing arrangements.

Service Availability is limited. Refer to # footnote on page 5-92.

© 2022 Frontier Communications Parent, Inc. All rights reserved

5 SPECIAL ACCESS (Cont'd)

5.6 Rate Regulations (Cont'd)

5.6.13 Four-Wire Voiceband and Digital Data Service (DDS) Rate Stability Plan (RSP)# (Cont'd) (C)

(F) RSP Application (Cont'd)

(2) RSP Expiration

(A) At the end of the service commitment period, the customer may either continue the services at non-RSP rates in effect, elect a new RSP, or exercise the RSP Extension Option (RSP-EX) as described below. If the customer chooses to convert to a new RSP, the new service period will begin the day following the expiration of the old Plan. The RSP rate for the new Plan will be at those in effect at the beginning of the new service period. If the customer fails to make this selection, the Telephone Company will notify the customer and continue one (1) additional month of RSP billing. If the customer does not notify the Company of its intentions within thirty (30) days from the expiration date of the RSP, the services under the plan will revert to general tariffed rates, unless set forth below.

(B) To qualify for RSP-EX, the customer must meet the following requirements: 1) customer must complete an RSP term; 2) customer must subscribe in writing; and 3) term of the RSP-EX must be equal to that of the customer's current, expiring, or expired plan. Customers who have an RSP that expired within the twelve (12) month period prior to August 7, 2004, may also elect the RSP-EX, provided that such customers, (a) notify the Telephone Company in writing no later than October 6, 2004, of their intention to elect the RSP-EX; and (b) select an RSP-EX term equal to that of their current or expired RSP.

(C) Customer's RSP-EX rates will be the then prevailing rates of the current, expired, or expiring RSP, as applicable. The RSP-EX shall be effective as of 1) the day following the expiration date of their current plan for those customers (i) whose plan has not yet expired, or (ii) has expired and such customer is within the thirty (30) day period set forth in 5.6.13(F)(2)(A) preceding; or 2) the enrollment date of the RSP-EX for those customers whose plan has already expired within the twelve (12) month period prior to August 7, 2004, and (i) who have renewed their RSP or (ii) who did not renew their RSP within the thirty (30) day period following expiration of their RSP as set forth in 5.6.13(F)(2)(A) preceding.

Service Availability is limited. Refer to # footnote on page 5-92.

© 2022 Frontier Communications Parent, Inc. All rights reserved

5 SPECIAL ACCESS (Cont'd)

5.6 Rate Regulations (Cont'd)

5.6.13 Four-Wire Voiceband and Digital Data Service (DDS) Rate Stability Plan (RSP)# (Cont'd) (C)

(F) RSP Application (Cont'd)
(2) RSP Expiration

All terms and conditions of the RSP as set forth in section 5.6.13 preceding apply to the RSP-EX with the exception of the following:

(a) In lieu of the requirement set forth in the second paragraph of Section 5.6.13(B) preceding, at an annual review, an allowance of minus twenty-five (-25%) will be considered as having met the commitment level. When the number of RSP SALs at the annual review is less than the acceptable commitment range, penalty charges will apply based on the difference between the commitment level less twenty-five (25%) and the number of RSP SALs in effect at the annual review. For example, if the commitment level is 100 and the customer has 70 RSP SALs at the time of the annual review, the penalties described above will be applied to the difference between 75 (25% less than 100) and 70, which would result in 5 under this example;

(b) The customer may reset its commitment level upon electing the RSP-EX. In addition, during any plan year, the customer may reset the commitment level or terminate the RSP-EX by notifying the Telephone Company in writing no later than sixty (60) days prior to the annual review date of the RSP-EX. The termination or change in commitment level shall be effective on the annual review date. Customers who terminate the plan will revert to general tariff rates and terms effective on the annual review date. Customers will not be liable for any penalties for successive years remaining in the RSP-EX from the annual review date on which the plan was terminated. Customer will be liable for penalties or liabilities if the RSP-EX is terminated prior to an annual review date. For example, if customer decides to terminate the RSP-EX during month four of year two of the plan, then customer will be liable for any penalties for failing to meet its commitment in year two as set forth herein. However, under this example, customer will not be liable for any termination liabilities associated with successive years after year two remaining in the RSP-EX.

(c) The minimum combined national commitment level of 500 Four-Wire Voiceband and DDS SALs as set forth in the first paragraph of Section 5.6.13(B) preceding is not applicable to customers of the RSP-EX with commitment periods beginning prior to September 7, 2013. The minimum combined national commitment level of 500 Four Wire Voiceband and DDS SALs will apply to RSP- (C)
EX with terms beginning on or after September 7, 2013. For RSP-EX (C)
commitment periods beginning on or after September 7, 2013, the customer may not reset its commitment level below 500 pursuant to (b) preceding.

Service Availability is limited. Refer to # footnote on page 5-92.

© 2022 Frontier Communications Parent, Inc. All rights reserved

5 SPECIAL ACCESS (Cont'd)

5.6 Rate Regulations (Cont'd)

5.6.13 Four-Wire Voiceband and Digital Data Service (DDS) Rate Stability Plan (RSP)# (Cont'd) (C)

(F) RSP Application (Cont'd)

(3) Upgrade to Higher Capacity Service

The customer may upgrade service to a high capacity service during the RSP period. The upgraded service will be subject to all appropriate NRCs.

If both of the following conditions exist, the commitment level will be decreased by the number of RSP SALs that are upgraded to a high capacity service.

- The customer must notify the Telephone Company in writing in addition to issuing an ASR.

- The high capacity service period must be equal to or longer in length than the time remaining under the RSP.

Service Availability is limited. Refer to # footnote on page 5-92.

© 2022 Frontier Communications Parent, Inc. All rights reserved

5 SPECIAL ACCESS (Cont'd)

5.6 Rate Regulations (Cont'd)

5.6.14 DS1 Term Volume Plans#

(A) Description

One-, Two-, Three-, Five-Year DS1 Term Volume Plans (TVP)

The DS1 Term Volume Plan (TVP) allows customers discounts, which are applied to DS1 SALs based upon a volume and term commitment. The customer's DS1 SAL commitment level can be established on a nationwide basis or negotiated between the customer and the Telephone Company (i.e., state basis, regional basis, etc.). The TVP is offered for a 1, 2, 3 or 5-year term commitment period. All of the customer's TVP DS1 SALs will be billed at the same rate, based upon the state where the service is located, the length of the term selected by the customer, and the threshold level in which the commitment quantity falls. All other associated rate elements or additional features are available at the applicable tariffed rates and regulations.

During the TVP term, the customer may elect to increase the term or commitment level of the plan without any termination liability, provided there is no lapse of time between the effective date of the increase and the termination of the previously effective term or commitment quantity.

The new term length begins on the same start day as the term length it replaces. There will not be any retroactive adjustments of a discount due to a customer-initiated change in term or commitment quantity.

Eight- and Ten-Year DS1 Term Volume Plans (ETTVP)

The Eight- and Ten-Year DS1 Term Volume Plans (ETTVP) allow customers discounts, which are applied to DS1 SALs based upon a volume and term commitment. The customer elects to enroll in an ETTVP by specifying in writing the enrollment date (which will be the anniversary date) and their volume and term commitment.

The ETTVP is offered for an 8- or 10-year term commitment period. Time In-Service Credit (TISC) will be granted on a replaced TVP for uninterrupted TVP subscription time and applied toward the new 8- or 10-year commitment period. All of the customer's ETTVP DS1 SALs will be billed at the state rate in this Guide, based upon the state where the service is located, the length of the term selected by the customer, and the threshold level in which the commitment quantity falls. All other associated rate elements or additional features are available at the applicable tariffed rates and regulations.

Effective June 1, 2019, TVP/ETTVP plans are no longer permitted. TVP/ETTVP customers subscribed as of June 1, 2019 may continue with their existing subscriptions but will not be eligible to extend, renew, reenroll in, convert to a new TVP/ETTVP period, or in any other way continue their existing plan beyond its currently scheduled expiration. If at any time an existing customer terminates its TVP/ETTVP, the customer may not re-subscribe to the plan. (C)

© 2022 Frontier Communications Parent, Inc. All rights reserved

5 SPECIAL ACCESS (Cont'd)

5.6 Rate Regulations (Cont'd)

5.6.14 DS1 Term Volume Plans#

(B) Rate Application

One-, Two-, Three-, Five-Year DS1 Term Volume Plans (TVP)

For conversion of existing month-to-month DS1 service to a TVP arrangement, the customer will be required to submit written notification or a change order ASR to convert to the TVP. No service or billing interruption will occur when a customer converts from month-to-month rates to a TVP. If no other changes to the service(s) are ordered, no charges will apply.

If a change involves establishing a multiplexing arrangement, termination liability charges will not apply if the hub wire center and the serving wire center of the customer designated location are the same.

Eight- and Ten-Year DS1 Term Volume Plan (ETTVP)

For conversion of existing month-to-month DS1 service to a ETTVP arrangement, the customer will be required to submit written notification or a change order ASR to convert to the ETTVP. No service or billing interruption will occur when a customer converts from month-to-month rates to a ETTVP. No TISC will be counted for termination liability purposes. If no other changes to the service(s) are ordered, no charges will apply.

If a change involves establishing a multiplexing arrangement, termination liability charges will not apply if the hub wire center and the serving wire center of the customer designated location are the same.

Service availability is limited. See # footnote on Page 5-99.

© 2022 Frontier Communications Parent, Inc. All rights reserved

5 SPECIAL ACCESS (Cont'd)

5.6 Rate Regulations (Cont'd)

5.6.14 DS1 Term Volume Plans# (Cont'd)

(C) Rate Changes

One-, Two-, Three-, Five-Year DS1 Term Volume Plans (TVP)

Rate changes in the TVP monthly recurring DS1 SAL rates will be passed on to subscribers of the plan. However, during the TVP period, should the rates increase, the customer may, at his/her option, terminate the TVP arrangement without penalty or liability, unless the increase is a result of FCC action.

Eight- and Ten-Year DS1 Term Volume Plan (ETTVP)

Rate changes in the ETTVP monthly recurring DS1 SAL rates will be passed on to subscribers of the plan. However, during the ETTVP period, should the rates increase, the customer may, at his/her option, terminate the ETTVP arrangement without penalty or liability, unless the increase is a result of FCC action.

Threshold Levels

One-, Two-, Three-, Five-Year DS1 Term Volume Plans (TVP)

Two or more DS1 SALs are required to qualify for a TVP. Rates are applied based on the following DS1 SAL threshold levels: 2-60, 61-120, 121-240, 241-500, 501-1000, 1001-3000, 3001-6000, 6001-11,000 and Over 11,000.

Eight- and Ten-Year DS1 Term Volume Plan (ETTVP)

4000 or more DS1 SALs are required to qualify for an ETTVP. Rates are applied based on the following DS1 SAL threshold levels: 4000-6000; 6001-10,000; 10,001-20,000; 20,001-30,000; and Over 30,000.

Service availability is limited. See # footnote on Page 5-99.

© 2022 Frontier Communications Parent, Inc. All rights reserved

5 SPECIAL ACCESS (Cont'd)

5.6 Rate Regulations (Cont'd)

5.6.14 DS1 Term Volume Plans# (Cont'd)

(E) Changes to Commitment Quantity or Term

One-, Two-, Three-, Five-Year DS1 Term Volume Plans (TVP)

At any time during the plan term, the customer may increase the commitment quantity of DS1 SALs or commitment term to receive a lower threshold rate by submitting written notification to the Telephone Company.

At any time during the plan term, the customer may convert its One-, Two-, Three-, or Five-Year TVP to an Eight- or Ten-Year ETTVP. For purposes of the new term length, the ETTVP begins on the same anniversary date as the TVP it replaces. For example, if the original term began January 1, 2000, for a 5-year TVP, and the customer wants to convert to an 8-year ETTVP on November 21, 2003, the anniversary date for the 8-year ETTVP remains January 1, 2000. There will not be any retroactive adjustments of a discount due to a customer-initiated change in term or commitment quantity.

When a penalty is assessed at the annual review, as set forth in 5.6.14, the number of DS1 SALs in service will become the commitment quantity for the balance of the commitment term or until such time as a subsequent adjustment is required.

Eight- and Ten-Year DS1 Term Volume Plans (ETTVP)

At any time during the plan term, the customer may increase the term or volume commitment to receive a lower threshold rate by submitting written notification to the Telephone Company. No termination liability will be assessed provided there is no lapse of time between the effective date of the increase and the termination of the previously effective term or commitment quantity.

The new term length begins on the same anniversary date as the term length it replaces. There will not be any retroactive adjustments of a discount due to a customer-initiated change in term or commitment quantity. For example, if the original term began January 1, 2000, for an 8-year term, and the customer wants to convert to a 10-year plan on November 21, 2003, the anniversary date for the 10-year plan remains January 1, 2000

Service availability is limited. See # footnote on Page 5-99.

© 2022 Frontier Communications Parent, Inc. All rights reserved

5 SPECIAL ACCESS (Cont'd)

5.6 Rate Regulations (Cont'd)

5.6.14 DS1 Term Volume Plans# (Cont'd)

(F) TVP Plan Enrollment

One-, Two-, Three-, Five-Year DS1 Term Volume Plans (TVP)

When the customer elects to enroll in a TVP the customer must specify, in writing, the enrollment date (which will be the anniversary date) and the DS1 SAL commitment quantity. The specified enrollment date must be within 30 days of receipt. By the specified date, the customer must submit a request in writing or issue ASR(s) to add DS1 SALs to the TVP and/or convert month-to-month arrangement DS1 SALs to the TVP to fall within the commitment quantity specified.

Eight- and Ten-Year DS1 Term Volume Plans (ETTVP)

When the customer elects to enroll in an ETTVP the customer must specify, in writing, the enrollment date (which will be the anniversary date) and the term and volume DS1 SAL commitment.

The specified enrollment date must be within 30 days of receipt of the written notice. By the specified enrollment date, the customer must submit a request in writing or issue ASR(s) to convert DS1 SALs to the ETTVP and/or convert month-to-month arrangement DS1 SALs to the ETTVP to fall within the commitment quantity specified.

Service availability is limited. See # footnote on Page 5-99.

© 2022 Frontier Communications Parent, Inc. All rights reserved

5 SPECIAL ACCESS (Cont'd)

5.6 Rate Regulations (Cont'd)

5.6.14 DS1 Term Volume Plans# (Cont'd)

(G) Annual Review

One-, Two-, Three-, Five-Year DS1 Term Volume Plans (TVP)

Each customer's TVP will be reviewed annually. The customer will be notified in writing as to the status of the TVP. If the in-service DS1 SAL quantity falls below the commitment quantity, an allowance of 3% will be considered as having met the commitment quantity. Where the customer does not meet the minimum quantity of DS1 SALs in service, penalties will be assessed as set forth under 5.6.14.

If the number of DS1 SALs increase from the initial commitment, the customer will have the option of increasing the commitment level for the remainder of their TVP. If the customer chooses not to increase the commitment level, he/she may convert the increased number of DS1 SALs to a monthly plan or a second TVP plan.

The customer may decrease the commitment level at the time of the annual review and pay the applicable penalties for the amount of DS1 SALs being decreased. Penalties will apply as set forth in 5.6.14.

The customer will have 30 days from receipt of notification to convert DS1 SALs. If the customer does not take action during the 30-day period, the commitment level will be automatically changed to the number of TVP DS1 SALs in effect at the annual review.

Eight- and Ten-Year DS1 Term Volume Plan (ETTVP) #

Each customer's ETTVP will be reviewed annually. The customer will be notified in writing as to the status of the ETTVP. If the in-service DS1 SAL quantity falls below the commitment quantity penalties will be assessed as set forth under 5.6.14 . For purposes of determining whether the customer's in-service DS1 SAL quantity meets the ETTVP commitment quantity (but not for the purpose of subjecting FiberConnect OPP SALs to ETTVP rates or for any other purpose), all in-service FiberConnect OPP SALs, expressed on an equivalent DS1 basis, will be included in the in-service ETTVP quantity count. For example, four (4) DS1s provided over a FiberConnect OPP SAL will count as four (4) ETTVP DS1 SALs.

Service availability is limited. See # footnote on Page 5-99.

© 2022 Frontier Communications Parent, Inc. All rights reserved

5 SPECIAL ACCESS (Cont'd)

5.6 Rate Regulations (Cont'd)

5.6.14 DS1 Term Volume Plans# (Cont'd)

(H) TVP/ETTVP Conditions

One-, Two-, Three-, Five-Year DS1 Term Volume Plans (TVP)

If a DS1 service (circuit) consists of two DS1 SALs, both DS1 SALs must be in the TVP.

After enrolling in the plan, the customer may delete or add DS1 SALs rated at the specified term period/threshold level rate at any time during the plan. For example, if the customer subscribes to a 2-year TVP at the 61-120 DS1 SAL threshold level, DS1 SALs may be added at any time at the 2-year 61-120 threshold rate level.

Eight- and Ten-Year DS1 Term Volume Plans (ETTVP)

If a DS1 service (circuit) consists of two DS1 SALs, both DS1 SALs must be in the ETTVP.

After enrolling in the plan, the customer may add DS1 SALs rated at the specified term period/threshold level rate at any time during the plan. For example, if the customer subscribes to an 8-year ETTVP at the 10,001-20,000 DS1 SAL threshold level, DS1 SALs may be added at any time at the 8-year 10,001-20,000 threshold rate level. New DS1 SALs enrolled in the ETTVP after the initial enrollment period must remain in the plan for a minimum period of 12 months. Any DS1 SALs disconnected within the 12-month minimum period will be subject to a minimum period charge equal to 100% of the MRCs for the remainder of the 12-month period.

Service availability is limited. See # footnote on Page 5-99.

© 2022 Frontier Communications Parent, Inc. All rights reserved

5 SPECIAL ACCESS (Cont'd)

5.6 Rate Regulations (Cont'd)

5.6.14 DS1 Term Volume Plans# (Cont'd)

Penalties for Failing To Meet Commitment

One-, Two-, Three-, Five-Year DS1 Term Volume Plans (TVP)

When the number of TVP DS1 SALs at the annual review is less than the commitment quantity minus 3%, the penalty will be the lowest TVP rate for the current threshold in the states where the service is located, multiplied by the shortfall multiplied by 4 months.

For example, if the commitment quantity is 100 and the customer has 90 DS1 TVP SALs at the time of the annual review, the penalty described below will be applied to the shortfall difference of 97 (3% less than 100), and 90..

- Current threshold level is 61-120, 5 Year term
- In-service quantity at annual review = 90
- Shortfall is 97 - 90 = 7
- Penalty is calculated as follows:

$150.00* x 7 x 4 months = $4,200.00 penalty

* Lowest TVP MRC applied the customer

Eight- and Ten-Year DS1 Term Volume Plan (ETTVP)

When the number of ETTVP DS1 SALs at the annual review is less than the commitment quantity, the penalty will be the average ETTVP MRC per circuit, multiplied by the shortfall multiplied by 6 months.

For example, if the commitment quantity is 9000 and the customer has 8700 DS1 ETTVP SALs at the time of the annual review, the penalty described below will be applied to the shortfall difference of 9000 and 8700. Customer has DS1 SALs in every state.

- Current threshold level is 6001-10,000, 8 Year term
- Commitment quantity is 9000
- In-service quantity at annual review = 8700
- ETTVP monthly billing $1,070,100
- Average ETTVP MRC per circuit ($1,070,100 / 8700) = $123
- Shortfall is 9000-8700 = 300
- Penalty is calculated as follows:

$123.00* x 300 x 6 months = $ 221,400 penalty

* Average ETTVP MRC (MRC revenue divided by the number of SALs in-service)

Service availability is limited. See # footnote on Page 5-99.

© 2022 Frontier Communications Parent, Inc. All rights reserved

5 SPECIAL ACCESS (Cont'd)

5.6 Rate Regulations (Cont'd)

5.6.14 DS1 Term Volume Plans# (Cont'd)

(J) TVP Nonrecurring Charge

One-, Two-, Three-, Five-Year DS1 Term Volume Plans (TVP)

Customers subscribing to a TVP will be assessed a nonrecurring charge per DS1 SAL installed except when converting standard month-to-month DS1 SALs to a TVP.

Eight- and Ten-Year DS1 Term Volume Plans (ETTVP)

Customers subscribing to an ETTVP will be assessed a nonrecurring charge per DS1 SAL installed except when converting standard month-to-month DS1 SALs to an ETTVP.

(K) Changes in Length of a TVP Period

One-, Two-, Three-, Five-Year DS1 Term Volume Plans (TVP)

Prior to the expiration of a TVP period, the customer may elect to convert to a new TVP period of the same or different length, subject to the following conditions:

- no credit will be given for the new payment period for payments made under the original TVP arrangement
- NRCs will not be reapplied for existing service(s)
- if the new TVP period is shorter in length than the time remaining under the existing TVP, the change to the new TVP period constitutes a cancellation of the existing TVP and termination liability charges will apply as set forth under 5.16.14(O) following.

Eight- and Ten-Year DS1 Term Volume Plans (ETTVP)

Prior to the expiration of an ETTVP period, the customer may elect to convert to a new ETTVP or TVP period of the same or different length, subject to the following conditions:

- NRCs will not be reapplied for existing service(s)
- if the new ETTVP or TVP period is shorter in length than the time remaining under the existing ETTVP, the change to the new ETTVP or TVP period constitutes a cancellation of the existing ETTVP and termination liability charges will apply as set forth under 5.16.14(O) following.

Service availability is limited. See # footnote on Page 5-99.

© 2022 Frontier Communications Parent, Inc. All rights reserved

5 SPECIAL ACCESS (Cont'd)

5.6 Rate Regulations (Cont'd)

5.6.14 DS1 Term Volume Plans# (Cont'd)

(L) Options at Expiration

One-, Two-, Three-, Five-Year DS1 Term Volume Plans (TVP)

At the expiration of a TVP period, the customer may select one of the following:

(1) Select any then-effective TVP period to establish a new TVP. All terms and conditions, including termination liability, will apply to the new TVP period.
(2) Select any then-effective ETTVP period to establish a new ETTVP. All terms and conditions, including termination liability, will apply to the new ETTVP period.

(3) Discontinue TVP and convert service to a month-to-month payment plan.

If the customer fails to notify the Telephone Company of its choice above prior to the expiration of its TVP period, the Telephone Company will notify the customer and continue two additional months of TVP billing. If the customer does not notify the Telephone Company of its choice above, in writing, within the first 60 days after the expiration date, billing will remain at the current threshold level and a new TVP period will begin based on the then-effective term and quantity commitment. All terms and conditions, including termination liability will apply to the new TVP period.

Service availability is limited. See # footnote on Page 5-99.

© 2022 Frontier Communications Parent, Inc. All rights reserved

5 SPECIAL ACCESS (Cont'd)

5.6 Rate Regulations (Cont'd)

5.6.14 DS1 Term Volume Plans# (Cont'd)

(L) Options at Expiration (Cont'd)

Eight- and Ten-Year DS1 Term Volume Plans (ETTVP)

At the expiration of an 8-year ETTVP period, the customer may select one of the following options:

(a) Select any then-effective TVP period to establish a new TVP. All terms and conditions, including termination liability, will apply to the new TVP period.
(b) Select any then-effective ETTVP period to establish a new ETTVP. All terms and conditions, including termination liability, will apply to the new ETTVP period.
(c) Discontinue ETTVP and convert service to a month-to-month payment plan.

If the customer fails to notify the Telephone Company of its choice above prior to the expiration of its ETTVP period, the Telephone Company will notify the customer and continue two additional months of ETTVP billing. If the customer does not notify the Telephone Company of its choice above, in writing, within the first 60 days after the expiration date, billing will remain at the current threshold level and a new ETTVP period will begin based on the then-effective term and quantity commitment.

At the expiration of a 10-year ETTVP period or extension period, as outlined in section 5.6.14 following, the customer may select one of the following options:

(a) Select any then-effective TVP period to establish a new TVP. All terms and conditions, including termination liability, will apply to the new TVP period.
(b) Select any then-effective ETTVP period to establish a new ETTVP. All terms and conditions, including termination liability, will apply to the new ETTVP period.
(c) Discontinue ETTVP and convert service to a month-to-month payment plan.
(d) Extend the 10-year ETTVP period or extension period, as applicable and outlined in section 5.6.14 following.

If the customer fails to notify the Telephone Company of its choice above, the Telephone Company will notify the customer and continue two additional months of ETTVP billing. If the customer does not notify the Telephone Company of its choice above, in writing, within the first 60 days after the expiration date, billing will remain at the current threshold level and a new ETTVP period will begin based on the then-effective term and quantity commitment.

Service availability is limited. See # footnote on Page 5-99.

© 2022 Frontier Communications Parent, Inc. All rights reserved

5 SPECIAL ACCESS (Cont'd)

5.6 Rate Regulations (Cont'd)

5.6.14 DS1 Term Volume Plans# (Cont'd)

Extension Options at Expiration

One-, Two-, Three-, Five-Year DS1 Term Volume Plans (TVP)

Extension is not an option with TVP.

Eight- and Ten-Year DS1 Term Volume Plans (ETTVP) #

At the expiration of an 8-year ETTVP period, extension is not an option.

At the expiration of a 10-year ETTVP period or extension period, as applicable, the customer has the option to extend the expiration date of the expiring 10-year ETTVP plan at the then-effective 10-year rates, as specified in section 5.7.18(A)(6) following, for an additional 2-year period. TISC is not applicable when extending the expiration date of the expiring 10-year ETTVP plan.

All terms and conditions of 10-year ETTVP, including termination liability as outlined in section 5.6.14(O) following, will apply during any extension period.

The customer is still subject to Annual Reviews as set forth in Section 5.6.14(G) preceding. If the customer chooses to extend the expiration date for a 10-year ETTVP period or extension period, as applicable, a new commitment level must be established.

Service availability is limited. See # footnote on Page 5-99.

© 2022 Frontier Communications Parent, Inc. All rights reserved

5 SPECIAL ACCESS (Cont'd)

5.6 Rate Regulations (Cont'd)

5.6.14 DS1 Term Volume Plans# (Cont'd)

Upgrade to Higher Speed Service

One-, Two-, Three-, Five-Year DS1 Term Volume Plans (TVP)
The customer may upgrade service to a higher speed during a TVP period. The upgraded service will be subject to all appropriate NRCs.

If the following conditions exist, no termination liability will be applied for the decreased number of TVP SALs that are upgraded to a higher speed service:
- The customer must notify the Telephone Company in writing, in addition to the ASR.
- The higher speed service period must be equal to or longer in length than the time remaining under the TVP.
- The upgraded service remains connected at the same point(s) of termination.

When TVP DS1 SALs are upgraded to an Optical Networking arrangement, the number of DS1 SALs upgraded will remain in the quantity count for the purpose of determining the applicable threshold level rate.

Eight- and Ten-Year DS1 Term Volume Plans (ETTVP)
The customer may upgrade service to a higher speed during an ETTVP period. The upgraded service will be subject to all appropriate NRCs. To demonstrate that the service has been upgraded, the customer must provide the Telephone Company with order number information including the Purchase Order Number (PON) of the disconnected service and the PON of the related new connect within 30 days of the conversion, after the upgrade has been made. The orders must be placed at the same time with due dates within 60 days of each other.

If the following conditions exist, no termination liability will be applied for the decreased number of ETTVP SALs that are upgraded to a higher speed service:
- The customer must notify the Telephone Company in writing, in addition to the ASR.
- The higher speed service period must be equal to or greater in length than the time remaining under the ETTVP.
- The upgraded service remains connected at the same point(s) of termination.

When ETTVP DS1 SALs are upgraded to a DS3 arrangement or to an Optical Networking arrangement, the number of DS1 SALs upgraded will remain in the quantity count for the purpose of determining the applicable threshold level rate.

Service availability is limited. See # footnote on Page 5-99.

© 2022 Frontier Communications Parent, Inc. All rights reserved

5 SPECIAL ACCESS (Cont'd)
5.6 Rate Regulations (Cont'd)

5.6.14 DS1 Term Volume Plans# (Cont'd)

(O) Termination Liability

One-, Two-, Three-, Five-Year DS1 Term Volume Plans (TVP)

When a TVP arrangement is cancelled in its entirety prior to the end of the commitment period, termination liability charges, as set forth below, will apply based on the remainder of the TVP period in effect at the time of disconnect.

One Year TVP - 50% of any remaining portion of the first year's recurring charges.

Two Year TVP - 50% of any remaining portion of the first year's recurring charges. In addition, for any remaining portion of the second year, the customer will be liable for 5% of the total monthly recurring charges in that period.

Three Year TVP - 50% of any remaining portion of the first year's recurring charges. In addition, for any remaining portion of the second and third years, the customer will be liable for 10% of the total monthly recurring charges in that time period.

Five Year TVP - 50% of any remaining portion of the first year's recurring charges. In addition, for any remaining portion of the second through fifth years, the customer will be liable for 15% of the total monthly recurring charges in that time period.

Eight- and Ten-Year DS1 Term Volume Plans (ETTVP)

When an ETTVP arrangement is cancelled in its entirety prior to the end of the commitment period, termination liability charges, as set forth below, will apply based on the remainder of the ETTVP period in effect at the time of disconnect. The termination liability charge applies in addition to any applicable minimum period charges.

Subject to any applicable TISC, the customer will be liable for one-hundred percent (100%) of any remaining DS1 SAL Monthly Recurring Charges (MRCs) in the first year of the ETTVP and for twenty-five percent (25%) of any remaining DS1 SAL MRCs for the balance of the commitment period.

For example, on an 8-year TVP with TISC of 5 years, the customer will be liable for 100% of any remaining DS1 SAL Monthly Recurring Charges (MRCs) for the sixth year recurring charges. In addition, for any remaining portion of the seventh and eighth years, the customer will be liable for 25% of the total monthly recurring charges in that time period.

When a 10-year ETTVP is cancelled in its entirety during an extension period, as described in 5.6.14 preceding, the customer will be liable for twenty-five percent (25%) of any remaining DS1 SAL Monthly Recurring Charges (MRCs) for the balance of the extension period.

Service availability is limited. See # footnote on Page 5-99.

© 2022 Frontier Communications Parent, Inc. All rights reserved

5 SPECIAL ACCESS (Cont'd)

5.6 Rate Regulations (Cont'd)

5.6.14 DS1 Term Volume Plans# (Cont'd)

(P) Termination Without Liability

One-, Two-, Three-, Five-Year DS1 Term Volume Plans (TVP)

During a TVP period, should the currently effective rate for a customer's service increase, the customer may, at their option, terminate the TVP arrangement without penalty or liability, unless the increase is a result of FCC action.

Eight- and Ten-Year DS1 Term Volume Plans (ETTVP)

During an ETTVP period, should the currently effective rate for a customer's service increase, the customer may, at their option, terminate the ETTVP arrangement without penalty or liability, unless the increase is a result of FCC action.

Service availability is limited. See # footnote on Page 5-99.

© 2022 Frontier Communications Parent, Inc. All rights reserved

5 SPECIAL ACCESS (Cont'd)

5.6 Rate Regulations (Cont'd)

5.6.15 E1 (2.048 Mbps) High Capacity Service

(A) Minimum Service Periods

E1 (2.048 Mbps) Service is offered under three minimum service periods, each with different rate levels. The minimum service periods are 1, 3 and 5 years. The customer must specify the minimum service period at the time the service is ordered.

The customer may select a longer minimum service period at any time, without penalty or application of nonrecurring charges, to obtain the lower monthly rate associated with a longer minimum service period. When the customer selects this option, he/she will receive full credit for the amount of time that the service was under the shorter minimum period. For example, if a customer ordered a one year minimum service period, then decided after six months to change to a three year minimum service period, the remaining obligation would be a period of 30 months. The new monthly recurring charges will apply beginning with the effective date of the new minimum service period.

(B) Expiration of Minimum Service Period

At the expiration of a minimum service period, the Telephone Company will continue to bill the customer for the same minimum service period rates unless the customer chooses to discontinue or converts to a different minimum service period.

When a customer retains E1 service(s) for the duration of a minimum service period, the termination liabilities expire. As long as the customer makes no physical changes to the configuration of service(s), the customer will no longer be liable for early termination discontinuance charges regardless of the minimum service period rate level.

(C) Reserved For Future Use (C)

Discontinuance With Liability - E1 Minimum Service Period

When E1 service is discontinued prior to the end of the minimum service period, the customer will be liable for a percentage of the total monthly charges for the remaining portion of the minimum service period. This charge will be based on the rates in effect at the time of disconnect. The customer's total liability is dependent upon the number of months remaining within the year that the service is discontinued times the liability rate for that year plus the total monthly charges for each annual period remaining in the minimum service period times the applicable liability rate. The liability rates for each year of the minimum service period are as follows:

Year in Which Service Is Discontinued	Liability Rate
1	50%
2	35%
3	30%
4	25%
5	20%

For example, if a customer with a five year minimum service period discontinues E1 service after six months within the 4th year, the customer will be liable for 25% of the total monthly charges for six months, and 20% of the total monthly charges for the 5th year.

© 2024 Frontier Communications Parent, Inc. All rights reserved

5 SPECIAL ACCESS (Cont'd)

5.6 Rate Regulations (Cont'd)

5.6.15 E1 (2.048 Mbps) High Capacity Service

(E) Notification of Discontinuance

Notice of discontinuance must be given by the customer at least thirty (30) business days prior to actual discontinuance. Monthly charges will apply for a period of thirty (30) business days from the date the Telephone Company receives discontinuance notification or until the requested discontinuance date, if longer than thirty (30) business days. (C) (C)

5.6.16 MetroLAN Special Transport #

(A) Description

MetroLAN Special Transport (MetroLAN) provides DS1 and FiberConnect transport between two or more serving wire centers located on a Telephone Company fiber optic ring. MetroLAN transport is provided at a flat-rate per month charge per DS1 or FiberConnect transport facility, per LAN traversed, regardless of the number of miles the circuit is routed on the fiber ring.

(B) Conversion of Existing DS1 Transport

Current DS1 and FiberConnect transport can be replaced by MetroLAN. For DS1 transport associated with a SAL provided under the One-, Two-, Three- and Five-Year DS1 Term Volume Plan (TVP), Eight- and Ten-Year DS1 Term Volume Plan (ETTVP) and FiberConnect Optional Payment Plan service, the MetroLAN term selected must be the same as the FiberConnect or DS1 SAL. Where access to MetroLAN is made via a multiplexing arrangement in a central office on the fiber ring (i.e., DS3 to DS1, or Voiceband to DS1), and there is no associated FiberConnect OPP or DS1 TVP SAL, then the MetroLAN One Year rate will apply. Customers with Month-to-Month DS1 SALs must convert to the One Year MetroLAN Rate.

(C) Term Commitment

When MetroLAN is ordered as part of new DS1 or FiberConnect service, the MetroLAN term must be the same as the term of the SAL portion of the DS1 TVP, DS1 ETTVP and FiberConnect service. Customers with Month-to-Month DS1 SALs must select the One Year MetroLAN term.

Discontinuance of Service

If a DS1 TVP SAL, DS1 ETTVP SAL or FiberConnect OPP SAL is discontinued, the MetroLAN portion of the circuit will also be discontinued. Termination liability charges will be assessed as in 5.6.12(F) for the SAL. No additional penalties will be assessed for the MetroLAN portion of the OPP circuit.

If a DS1 TVP SAL or DS1 ETTVP SAL is discontinued, the MetroLAN portion of the circuit will also be discontinued. Penalties for the discontinuance of TVP or ETTVP service will be assessed as in 5.6.14. No additional penalties will be assessed for the MetroLAN portion of the portion of the TVP or ETTVP circuit.

If a Month-to-Month DS1 SAL is discontinued, DS1 transport for the MetroLAN transport portion of the circuit is also discontinued.

MetroLAN transport may be converted to standard special access transport rates (i.e., per airline mile) at any time at no charge.

Effective September 15, 2012, new orders for MetroLAN Special Transport are no longer permitted. Existing customers with service as of September 15, 2012 may continue with their existing services. If at any time an existing customer discontinues service for a circuit or converts a circuit to standard special access transport, that circuit may not be converted back to MetroLAN Special Transport.

© 2024 Frontier Communications Parent, Inc. All rights reserved

5 SPECIAL ACCESS (Cont'd)

5.6 Rate Regulations (Cont'd)

5.6.16 MetroLAN Special Transport # (Cont'd)

(E) Continuation of Service Off the Ring

MetroLAN DS1 and FiberConnect circuits can be routed any distance on a fiber optic ring. When the DS1 or FiberConnect circuit leaves the ring for continuation on the network, normal tariff rates will be assessed for the portion of the route not on the ring.

(F) Renewal Option

When the MetroLAN term expires, the customer can renew for any term length as long as the new MetroLAN term selected is the same as the SAL portion of the DS1 or FiberConnect service (One Year option for DS1 Month-to-Month services). The SAL and MetroLAN must have the same term for new or renewed DS1 or FiberConnect service.

(G) Rate Changes

A decrease in the MetroLAN monthly recurring charge will be passed on to subscribers of the plan. During a MetroLAN period, should the currently effective rate for a customer's service increase, the customer may, at their option, terminate the MetroLAN arrangement without penalty or liability unless the increase is a result of FCC action.

(H) Service Availability

MetroLAN DS1 and FiberConnect transport is available to all DS1 and FiberConnect customers in the Telephone Company serving areas in which fiber optic rings are deployed. MetroLAN is provided between wire centers located on the same fiber optic ring as follows:

Service Availability is limited. Refer to # footnote on page 5-115.

© 2022 Frontier Communications Parent, Inc. All rights reserved

5 SPECIAL ACCESS (Cont'd)

5.6 Rate Regulations (Cont'd)

5.6.16 MetroLAN Special Transport # (Cont'd)

(H) Service Availability (Cont'd)

MetroLAN Name – FORT WAYNE

State	CLLI	Wire Center	Contiguous Metro LAN
IN	BPPSINXA	BIPPUS	
IN	CHRBINXA	CHURUBUSCO	
IN	FTWYINXA	FT. WAYNE - MAIN	
IN	FTWYINXB	FT. WAYNE - NORTHWEST	
IN	FTWYINXC	FT. WAYNE - SOUTH	
IN	FTWYINXD	FT. WAYNE - SOUTHEAST	
IN	FTWYINXE	FT. WAYNE - WAYNEDALE	
IN	FTWYINXF	FT. WAYNE - NORTH	
IN	FTWYINXG	FT. WAYNE - NORTHEAST	
IN	FTWYINXL	FT. WAYNE - WEST	
IN	GRRTINXA	GARRETT	
IN	HNTWINXA	HUNTERTOWN	
IN	HRLNINXA	HARLAN	
IN	LEO INXA	LEO	
IN	MOVLINXA	MONROEVILLE	
IN	NWHNINXA	NEW HAVEN	
IN	POE INXA	PEO - HOAGLAND	
IN	RONKINXA	ROANOKE	
IN	WTRLINXA	WATERLOO	

Service Availability is limited. Refer to # footnote on page 5-115.

© 2022 Frontier Communications Parent, Inc. All rights reserved

5 SPECIAL ACCESS (Cont'd)

5.6 Rate Regulations (Cont'd)

5.6.16 MetroLAN Special Transport # (Cont'd)

(H) Service Availability (Cont'd)

MetroLAN Name –DURHAM

NC	DRHMNCXA	DURHAM - WATTS
NC	DRHMNCXB	DURHAM - LAKEWOOD
NC	DRHMNCXC	DURHAM - HOLT
NC	DRHMNCXD	DURHAM - ANGIER
NC	DRHMNCXE	DURHAM - PARKWOOD
NC	DRHMNCXF	DURHAM - TRIANGLE
NC	DRHMNCXG	DURHAM - BENNETT
NC	DRHMNCXH	DURHAM - NELSON
NC	DRHMNCXM	DURHAM - MAIN
NC	DRHMNCXT	DURHAM - BRAGTOWN

Service Availability is limited. Refer to # footnote on page 5-115.

© 2022 Frontier Communications Parent, Inc. All rights reserved

5 SPECIAL ACCESS (Cont'd)

5.6 Rate Regulations (Cont'd)

5.6.16 MetroLAN Special Transport # (Cont'd)

(H) Service Availability (Cont'd)

MetroLAN Name – SOMERSET

State	CLLI	Wire Center	Contiguous Metro LAN
OR	ALOHORXX	ALOHA	
OR	BVTNORXB	BEAVERTON	
OR	HLBOORXB	HILLSBORO	
OR	SMRWORXA	SOMERSET - WEST	
OR	TGRDORXA	TIGARD	River Grove
OR	TGRDORXC	BULL MOUNTAIN	

MetroLAN Name – RIVER GROVE

OR	SHWDORXA	SHERWOOD	
OR	STFRORXX	STAFFORD	
OR	TGRDORXA	TIGARD	Somerset
OR	TULTORXA	TUALATIN	
OR	WIVLORXA	WILSONVILLE	

Service Availability is limited. Refer to # footnote on page 5-115.

© 2022 Frontier Communications Parent, Inc. All rights reserved

5 SPECIAL ACCESS (Cont'd)

5.6 Rate Regulations (Cont'd)

5.6.16 MetroLAN Special Transport # (Cont'd)

(H) Service Availability (Cont'd)

MetroLAN Name – EVERETT

State	CLLI	Wire Center	Contiguous Metro LAN
WA	BOTHWAXB	BOTHELL	Redmond
WA	EVRTWAXA	EVERETT PRIMARY	
WA	EVRTWAXC	CASINO	
WA	EVRTWAXF	EVERETT	
WA	HLLKWAXX	HALLS LAKE	
WA	MRWYWAXA	MANOR WAY	
WA	SLLKWAXA	SILVER LAKE	

MetroLAN Name – REDMOND

WA	BOTHWAXB	BOTHEL	Everett
WA	JUNTWAXA	JUANITA	
WA	KRLDWAXX	KIRKLAND	
WA	RDMDWAXA	REDMOND	

MetroLAN Name – TRI-CITIES

WA	KNWCWAXA	HIGHLANDS
WA	KNWCWAXC	MEADOW SPRING
WA	RCLDWAXA	NORTH RICHLAN
WA	RCLDWAXB	RICHLAND
WA	WRLDWAXA	WEST RICHLAND

Service Availability is limited. Refer to # footnote on page 5-115

© 2022 Frontier Communications Parent, Inc. All rights reserved

5 SPECIAL ACCESS (Cont'd)

5.6 Rate Regulations (Cont'd)

5.6.17 High Voltage Protection

(A) Description

High Voltage Protection Service is used at customer locations that may require special equipment to isolate or neutralize Ground Potential Rise (GPR) and/or induced voltage caused by faults in the electric power system. GPR is a voltage difference between two or more ground electrodes caused by earth return currents. GPR on cable facilities can occur, for example, when current from lightning surges flow to ground, but GPR often is associated with voltage generated as the power system fault currents flow to ground. Maximum GPR is developed by the percentage of line-to-ground fault current entering earth through electrode impedance.

This feature will provide high voltage isolation for Special Access telecommunications, while enabling the normal transmission between the Telephone Company wire center and the equipment at the customer's location during GPR environment due to electrical power faults.

(B) Provisioning

The Telephone Company shall determine the proper levels of protection required on its network to isolate or neutralize electrical hazard, based on the information provided by the customer. The customer shall provide the Telephone Company, in writing, the technical data necessary for the Telephone Company to determine the high voltage protection requirements, at the time of application for the initial service, additions to, or changes in the existing service. In addition, the customer shall notify the Telephone Company before making changes in the electric supply that will increase the GPR at the location.

© 2022 Frontier Communications Parent, Inc. All rights reserved

5 SPECIAL ACCESS (Cont'd)

5.6 Rate Regulations (Cont'd)

5.6.17 High Voltage Protection (Cont'd)

(B) Provisioning (Cont'd)

The technical data for the customer's location shall include, but not be limited to, the following:

- ground grid area in square feet
- ground gird impedance in ohms
- X/R ratio at worst case fault location
- GPR in volts MS

Based on the customer's technical data provided to the Telephone Company, the Telephone Company will provide the necessary high voltage protection equipment at the Telephone Company's demarcation point on the customer's premises and at the remote drainage location. The placement of the equipment by the Telephone Company shall in no way release the customer of its responsibility for damage, loss or claims caused by electrical hazards resulting from the customer's electric power system. The Telephone Company's liability for damage, loss or claims is set forth under 2.1.3.

The customer may elect to furnish the equipment at its premises to isolate or enutralize the electrical hazard subject to the approval of the Telephone Company; however, such approval by the Telephone Company shall not relieve the customer of its responsibility to install or maintain adequate high voltage equipment. The high voltage protection equipment at the customer's location will be exclusively owned either by the Telephone Company or by the customer.

When the customer provides the high voltage equipment at its premise, the Telephone Company will provide the necessary high voltage equipment at the wire center and remote drainage location. The Telephone Company will be responsible up to and including the network interface for the termination of Special Access Services regardless of ownership of the high voltage protection equipment.

© 2022 Frontier Communications Parent, Inc. All rights reserved

5 SPECIAL ACCESS (Cont'd)

5.6 Rate Regulations (Cont'd)

5.6.17 High Voltage Protection (Cont'd)

(B) Provisioning (Cont'd)

The Telephone Company will inspect and verify adequacy of the high voltage protection equipment when service is established and at such future times as deemed necessary due to additions, deletions, rearrangements, routine maintenance or for the purpose of verifying the adequacy of the high voltage protection equipment.

(C) Claims and Demands for Damage

In addition to the provisions in Section 2.3.11, the customer shall defend, indemnify and save harmless the Telephone Company from any and all loss, claims, demands, suits or other action or any liability whatsoever, whether suffered, made, instituted or asserted by the customer or by any other party or person, for any personal injury to or death of any person or persons, or for any loss, damage or destruction of any property whether owned by the customer or others, caused or claimed to have been caused directly or indirectly by the installation, operation, failure to operate, maintenance, removal, presence, condition, location or use of such equipment and services associated with high voltage protection equipment furnished by the Telephone Company or with customer equipment when combined or connected with facilities of the Telephone Company.

Services provided by the Telephone Company shall not cause the Telephone Company to become responsible for damage, loss or claims caused by electrical hazards resulting from a customer's electric power system.

© 2022 Frontier Communications Parent, Inc. All rights reserved

5 SPECIAL ACCESS (Cont'd)

5.6 Rate Regulations (Cont'd)

5.6.17 High Voltage Protection (Cont'd)

Network Outage

Interruptions or outages of services provided to customers may occur for reasons, such as facility damage due to storm loading, vehicle accident, lightning strike, or other acts of God. Circuit failures caused by such events cannot be prevented by services provided in accordance with this service (however, interruptions and service outages due to fault-produced ground potential rise and induction can be minimized). The Telephone Company expressly states that provision of the high voltage equipment cannot prevent such service outages as may normally occur due to the proceeding circumstances. It is the responsibility of the customer to provide sufficient protection to prevent damage caused by such events.

Interruptions or outages due to the effects (GPR and/or induction) of faults in the customer's power generating, transmission and/or distribution system are minimized through the installation and maintenance of high voltage protection equipment which is designed to operate in a fault-produced electrical environment.

(E) Compliance Statement

If the Telephone Company has provided service where high voltage protection is necessary, by the customer or the customer-provided equipment is nonfunctional or inadequate or the customer fails, upon written notice, to establish or reestablish the required high voltage protection equipment or apply for and obtain such protection from the Telephone Company, or keep the Telephone Company informed of changed high voltage requirements, then the Telephone Company will disconnect service 120 days after giving the notice required, as set forth under Section 2.1.8(A).

© 2022 Frontier Communications Parent, Inc. All rights reserved

5 SPECIAL ACCESS (Cont'd)

5.6 Rate Regulations (Cont'd)

5.6.17 High Voltage Protection (Cont'd)

(F) Rate Regulations

(1) Minimum Period

The minimum period for High Voltage Protection is one month.

(2) Rate Elements

(a) Initial Common Equipment

A nonrecurring charge and a monthly rate apply for the initial common (basic) equipment used for the physical connection to the network interface. The Initial Common Equipment can accommodate up to eight Special Access facility terminations at a customer's location.

(b) High Voltage Terminating Equipment

High Voltage Terminating Equipment is required for each Special Access facility termination. A nonrecurring charge and a monthly rate for the High Voltage Terminating Equipment apply in addition to the rates and charges for the Special Access facility as well as the associated Special Access Service regulations.

© 2022 Frontier Communications Parent, Inc. All rights reserved

5 SPECIAL ACCESS (Cont'd)

5.6 Rate Regulations (Cont'd)

5.6.18 LAN Extension Service #

(A) General

LAN (Local Area Network) Extension Service (LES) provides fiber transport connectivity between:

(1) two customer designated locations (one of which must be a service provider's point of presence with the other being one of the service provider's end user); or
(2) a customer designated premises and Expanded Interconnection Service (EIS) arrangement as set forth in Section 17; or
(3) a customer designated premises (must be a service provider's point of presence) and a wire center where connection to a Telephone Company-provided Ethernet LAN Service (ELS) Network-to-Network Interface (NNI) Port Only Connection occurs; or
(4) a customer's equipment in a the Telephone EIS arrangement and another wire center (i.e., other than the wire center where the Telephone Company EIS arrangement is provided) where connection to a Telephone Company-provided TLS NNI Port Only Connection occurs.

LES may also be connected to Telephone Company provided switched Ethernet service, where such connections are technically and operationally feasible, as determined by the Telephone Company.

LES is a point-to-point service, offered with a 10Mbps, 100Mbps, 1Gbps Ethernet or 1Gbps Extended Distance interface connection, available where facilities and conditions permit. Where suitable facilities and conditions are not available to provide LES, facilities may be specially constructed subject to the provisions set forth in 2.1.4, Provision of FIA, and 3.1.3, Special Construction, preceding.

Effective May 31, 2007, orders for new LES are no longer permitted. The Telephone Company will continue to provide LES pursuant to this Section 5.6.18 on any existing LES that is in-service as of May 31, 2007, or any order for LES that is placed with the Telephone Company prior to May 31, 2007 (collectively, Existing LES), subject to the following conditions:

a. For any Existing LES that is currently subscribed to a term plan (i.e., commitment periods of 3- and 5-years), the Telephone Company will continue to provide the Existing LES for an additional six (6) months beyond the expiration date of the customer's current commitment period, or until the customer replaces the Existing LES with a comparable Telephone Company provided service, or discontinues service, whichever comes first. Moves, additions and/or changes are not permitted.
b. For any Existing LES whose term plan expired prior to May 31, 2007, but the Existing LES continued on a month-to-month basis at prevailing rates, the Telephone Company will continue to provide the Existing LES until November 30, 2007, or until the customer replaces the Existing LES with a comparable Telephone Company provided service, or discontinues service, whichever comes first. Moves, additions and/or changes are not permitted.

© 2022 Frontier Communications Parent, Inc. All rights reserved

5 SPECIAL ACCESS (Cont'd)

5.6 Rate Regulations (Cont'd)

5.6.18 LAN Extension Service # (Cont'd)

(B) Service Description

LES is provisioned over two dedicated fiber strands between the two locations involved where service is delivered over the network interface specified by the customer. The LES network interface converts the optical signal to an electrical Ethernet signal at speeds of 10 Mbps, or 100 Mbps. The 1 Gbps network interface enables LES to be delivered as an optical signal.

When LES is delivered to an EIS arrangement, service will be cross-connected to the EIS arrangement as described in Section 17, following. The provision of LES at 100Mbps, 1Gbps or 1Gbps Extended Distance may include the use of dense wave division multiplexing technology, where available.

When LES connects to a TLS NNI Port Only Connection or Telephone Company provided switched Ethernet service network-to-network interface port only connection, it is offered only with a 1 Gbps Ethernet or 1 Gbps Extended Distance interface. Regulations, rates and charges for TLS NNI Port Only connection are set forth in The Telephone Company's Tariff FCC No. 8, Section 5, Part II, Section 5.11.

The Telephone Company's equipment at the customer's designated premises must be on conditioned power circuits (surge protected); the Telephone Company recommends an uninterrupted power supply (UPS).

No credit allowance for a service interruption is provided with LES.

Service intervals for LES are specified in Section 3.2.1 preceding.

(C) Technical Specifications

LES requires the use of single node, fiber optic facilities that meet the following specifications:

1310nm with a loss of 20dB or less for 10Mbps Ethernet
1310nm with a loss of 26dB or less for 100Mbps Ethernet
1310nm with a loss of 18dB or less for 1Gbps Ethernet
1550nm with a loss of 26dB or less for 1Gbps Ethernet (extended distance)

The dB loss is measured to include the special transport facility when applicable and any local and intra-building fibers used in the provision of LES.

Service availability limited. Refer to # footnote on Page 5-126.

© 2022 Frontier Communications Parent, Inc. All rights reserved

5 SPECIAL ACCESS (Cont'd)

5.6 Rate Regulations (Cont'd)

5.6.18 LAN Extension Service #(Cont'd)

Responsibilities and Rights of the Telephone Company

- The Telephone Company will provide the necessary fiber converter at the customer's designated premises to meet the interface requirements specified on the order for service.

- The Telephone Company is responsible for service up to and including the network interface or fiber distributing frame, as applicable. The Telephone Company's responsibility is limited to the furnishing of communications facilities suitable for LES.

- LES will not be available during those times when the Telephone Company must perform software updates and other maintenance. The Telephone Company will provide customers reasonable and timely notification to minimize impacts to the customer's service. The Telephone Company reserves the right to temporarily interrupt LES at other times in emergency situations.

- All other general regulations pertaining to the responsibilities and rights of the Telephone Company as specified in Section 2, preceding also apply.

(E) Responsibilities of the Customer

- The customer is responsible for all wiring and connections of its local area network to the customer side of the network interface or fiber distributing frame, as applicable.

- The LES customer is responsible for the installation, operation and maintenance of any customer provided equipment.

- The customer must provide a protected path for all network fibers on private property, sufficient AC or DC power to network interface equipment, access to all sites as needed by the Telephone Company personnel to perform services and a secure environment for the network equipment.

- The customer must provide a relay rack or wall space for mounting of the network interface device.

- The customer must provide connecting facility assignment (CFA) to which LES will be cross-connected to its Expanded Interconnection Service.

- The customer is responsible for any damage to the Company's network equipment resulting from problems with power provided by the customer at its locations. With the exception of connecting customer provided equipment to the network interface device, the customer may not attempt to modify, adjust or otherwise change Telephone Company owned facilities or network equipment used in the provision of service. The Telephone Company reserves the right to discontinue the provision of LES to a customer who tampers with Telephone Company owned equipment and/or facilities.

- The Telephone Company does not monitor the LES circuit. The customer may perform its own monitoring using surveillance equipment within its own network.

Service availability limited. Refer to # footnote on Page 5-126.

© 2022 Frontier Communications Parent, Inc. All rights reserved

5 SPECIAL ACCESS (Cont'd)

5.6 Rate Regulations (Cont'd)

5.6.18 LAN Extension Service # (Cont'd)

(F) Rate Regulations

(1) The rates and charges for LES apply as Special Access Line (SAL) and Transport. The LES SAL provides the transmission path to connect a customer designated premises to the associated serving wire center. Included as part of the LES SAL is a converter interface arrangement which defines the technical characteristics and transmission rate of the service. LES SALs apply as a monthly recurring rate and nonrecurring charge for each SAL provided. LES Transport applies as a recurring monthly charge for the airline distance between the serving wire centers associated with the locations involved.

When LES connects a customer designated premises and a customer's equipment in an EIS arrangement, as set forth in Section 5.6.18 (A)(2) preceding, an LES SAL rate element will not apply at the EIS arrangement end of the service.

When LES connects to a TLS NNI Port Only Connection, as set forth in Section 5.6.18 (A)(3) preceding, the NNI Port Only Connection rate element will apply in lieu of an LES SAL at the TLS end of the service.

When LES connects a customer's equipment in a EIS arrangement to a TLS NNI Port Only Connection in another wire center, as set forth in Section 5.6.18 (A)(4) preceding, an LES SAL rate element will not apply at the EIS arrangement end of the service and an NNI Port Only Connection rate element will apply in lieu of an LES SAL at the TLS end of the service. LES Transport will apply for the airline distance between the serving wire centers associated with the locations involved.

When LES connects to a Telephone Company provided switched Ethernet service network-to-network interface port only connection, the LES SAL will not apply at the switched Ethernet service end of the service.

When LES connects a customer's equipment in a EIS arrangement to a switched Ethernet service network-to-network interface port only connection in another wire center, the LES SAL rate element will not apply at either the EIS arrangement end of the service or the switched Ethernet service end of the service. LES Transport will apply for the airline distance between the serving wire centers associated with the locations involved.

Service availability limited. Refer to # footnote on Page 5-126.

© 2022 Frontier Communications Parent, Inc. All rights reserved

5 SPECIAL ACCESS (Cont'd)

5.6 Rate Regulations (Cont'd)

5.6.18 LAN Extension Service # (Cont'd)

(F) Rate Regulations

(2) LES Term Plans

(a) LES is provided with a term plan of 3 or 5 years at rates set forth in Section 5.7.21 following. The customer must specify the term plan selected in its order for service.

(b) At any time during the term commitment period, the customer may replace LES with LES of a higher transmission rate without incurring termination liability on the LES being replaced, provided that the term plan of the replacing LES is equal to, or greater than, the term commitment period of the plan being replaced.

(c) At any time during the term commitment period, the customer may convert to a new LES term plan of the same or different term commitment, subject to the following:

- No time-in-service credit will be granted for the period of time the replaced term commitment period was in effect.

- Termination liability will not apply to the plan being replaced, provided that the term commitment period of the replacing plan is equal to or longer than the term commitment period being replaced.

Service availability limited. Refer to # footnote on Page 5-126.

© 2022 Frontier Communications Parent, Inc. All rights reserved

5 SPECIAL ACCESS (Cont'd)

5.6 Rate Regulations (Cont'd)

5.6.18 LAN Extension Service # (Cont'd)

(F) Rate Regulations(Cont'd)

(2) LES Term Plans (Cont'd)

(d) All rate elements associated with LES must be under the same term plan with the same term commitment period.

(e) At expiration of the term commitment period, the prevailing rates for the current plan will continue until the customer cancels service or requests a new term plan.

(f) If service is disconnected in whole or in part prior to the end of the selected term commitment period, termination liability equal to the applicable monthly rate for the service multiplied by the number of months remaining in the unexpired portion of the term plan will apply. Minimum period charges as set forth in Section 2.4.2 preceding may also apply.

(g) Termination liability will not apply if the customer disconnects service due to a Telephone Company initiated rate increase. Within sixty calendar days of the rate increase, the customer must notify the Telephone Company in writing of its intent to disconnect service due to the increased rate and must disconnect the service within ninety calendar days of the rate increase.

(3) Cancellation of a LES order in whole or in part prior to the establishment of service is subject to the cancellation charges set forth in Section 2.4.3 preceding.

(4) A move in the point of termination of LES is subject to the regulations set forth in Section 5.6.4(B), preceding.

(5) The minimum period for LES is three years. LES Special Access Lines and LES Special Transport are subject to a three-month minimum period.

Service availability limited. Refer to # footnote on Page 5-126.

© 2022 Frontier Communications Parent, Inc. All rights reserved

5 SPECIAL ACCESS (Cont'd)

5.6 Rate Regulations (Cont'd)

5.6.19 DS3 Term Volume Plan#

(A) Description

(1) The DS3 Term Volume Plan (**DS3 TVP**) provides a customer with discounted monthly recurring rates for DS3 Special Access Line (**SAL**) rate elements based upon a term commitment and a committed number of DS3 SALs (**DS3 Commitment Quantity**). The DS3 Commitment Quantity represents the total number of DS3 SALs that the customer commits to the DS3 TVP, regardless of the total number of DS3 SALs that the customer currently has in-service in the operating territories of this Guide. Only one DS3 Commitment Quantity is allowed for the DS3 TVP. The DS3 Commitment Quantity (along with the Term Commitment as defined in (A)(2) following) determines the Commitment Level and corresponding rates applicable to the DS3 SALs included in the TVP. Commitment Levels are described in (C) following (**Commitment Level**).

(2) The DS3 TVP is offered for a 3, 5, or 7 year term commitment period (**Term Commitment**). Upon subscription to the DS3 TVP, the customer must issue ASRs to add DS3 SALs to the TVP and/or convert existing SALs (billed Month to Month and/or under other term pricing plans) to the DS3 TVP such that the number of in-plan DS3 SALs is at least DS3 Commitment Quantity. All of the customer's in-plan DS3 SALs will be billed at the applicable DS3 TVP rate level. The applicable DS3 TVP rate level corresponds to the length of the Term Commitment selected by the customer and a Commitment Level as determined by the DS3 Commitment Quantity. For example, if a customer commits 51 DS3 circuits to a 3 year Term Commitment under this DS3 TVP, but has a total of 150 DS3 circuits in-plan, the customer will receive a rate corresponding to a Term Commitment of 3 years for a Commitment Level of 50-149 DS3 circuits for all 150 DS3 circuits.

(3) During the DS3 TVP term, the customer may elect to increase the DS3 Commitment Quantity in accordance with (G) following, the Term Commitment in accordance with (H) following, or both.

(4) The regulations and rates set forth in this Section 5.6.19 apply only to the DS3 SAL rate elements for Eligible DS3 Services, as defined in (1) following, under a DS3 TVP. All other rate elements or additional features associated with the service are provided at the rates and regulations set forth elsewhere in this Guide as they may apply to those associated rate elements or additional features.

Effective November 21, 2017, new subscriptions to DS3 Term Volume Plan is no longer permitted. DS3 TVP customers subscribed as of November 21, 2017 may continue with their existing subscriptions. If at any time an existing customer terminates its DS3 TVP, the customer may not re-subscribe to the plan.

© 2022 Frontier Communications Parent, Inc. All rights reserved

5 SPECIAL ACCESS (Cont'd)

5.6 Rate Regulations (Cont'd)

5.6.19 DS3 Term Volume Plan# (Cont'd)

(B) DS3 TVP Enrollment and Conversion of DS3 Services

(1) A customer wishing to subscribe to a DS3 TVP must submit a written request to the Telephone Company. The written request must be submitted in a manner designated by the Telephone Company, and must include all of the following.

(a) The enrollment date for the DS3 TVP. This is the date on which DS3 TVP rates will commence and serves as the anniversary date for the DS3 TVP for the purpose of administering the Annual Review described in (E) following. The enrollment date must be within thirty (30) calendar days of the Telephone Company receiving the customer's written subscription to DS3 TVP.

(b) The DS3 Commitment Quantity for the DS3 TVP. The DS3 Commitment Quantity shall be the number of DS3 SALs that the customer includes in the DS3 TVP and shall correspond to a Commitment Level as described in (C) following. In order to subscribe to DS3 TVP, a minimum of twenty (20) DS3 SALs must be committed to the DS3 TVP.

(c) The Term Commitment for the DS3 TVP. Term Commitment periods of 3-years, 5-years, or 7-years are offered.

(d) The Access Customer Name Abbreviations (**ACNAs**) to include in the DS3 TVP. Customer must own or have the right to utilize all the ACNAs subscribed to this DS3 TVP, and must otherwise comply with the terms and conditions of this Guide. Subsequent to initial subscription, additional ACNA(s) may be included in the DS3 TVP so long as the customer complies with the terms and conditions set forth in this Guide. Such requests must be made in the same manner and by providing the same information required for initial subscription under this (B) (1). The DS3 Commitment Quantity and the resulting Commitment Level must be increased to include the additional SALs associated with the addition of any ACNA(s). The increased Commitment Level will apply through the end of the Term Commitment. No adjustment to prior billing will be made, and no credits will be given based on the new Commitment Level as set forth in (G) following.

(e) Request for Time-in-Service Credit (**TISC**). TISC is described in (K) (2) following. TISC must be requested by the customer in writing and agreed to by the Telephone Company prior to the enrollment date of the DS3 TVP. The customer must request TISC in its initial subscription under this (B) (1) and the request must include all of the information specified in (K) (2) following. No requests for TISC will be accepted after the enrollment date of the DS3 TVP.

Service availability limited. Refer to # footnote on Page 5-132.

© 2022 Frontier Communications Parent, Inc. All rights reserved

5 SPECIAL ACCESS (Cont'd)

5.6 Rate Regulations (Cont'd)

5.6.19 DS3 Term Volume Plan# (Cont'd)

(B) DS3 TVP Enrollment and Conversion of DS3 Services (Cont'd)

(2) When an Eligible DS3 Service (as described in (1) following) under a term plan is discontinued in order to include the DS3 SAL in the DS3 TVP, no termination penalty will apply for early termination of that DS3 Service. TISC under (K)(2) following may be available for the time that the DS3 SAL was under a term plan prior to conversion to the DS3 TVP.

(3) Where there is no service interruption, billing interruption or other changes to an existing service being converted to the DS3 TVP, nonrecurring charges do not apply for the conversion.

(4) If the customer converts a service that is not an Eligible DS3 Service, as defined in (1) following, (such as DS3 Unlimited System) to a service that is an Eligible DS3 Service, as defined in (1) following, such conversion will be treated as a disconnection of the existing service and installation of a new service and all applicable charges, terms and conditions will apply. The new TVP eligible service will be included in the in-service quantity count as of the order completion date for the conversion, and the applicable DS3 TVP rates will apply as of that date.

(C) Commitment Levels

The DS3 Commitment Quantity as specified by the customer determines the Commitment Level for the DS3 TVP. The Commitment Level determines the rates applicable to all DS3 SALs included in the DS3 TVP. These rates are arranged in tiers based on the Commitment Level (shown in parentheses below) as set forth in Section 5.7.22 following.

Commitment Level 1 (20 DS3 SALs – 49 DS3 SALs)
Commitment Level 2 (50 DS3 SALs – 149 DS3 SALs)
Commitment Level 3 (150 DS3 SALs – 274 DS3 SALs)
Commitment Level 4 (275 DS3 SALs – 499 DS3 SALs)
Commitment Level 5 (500 DS3 SALs or more)

Service availability limited. Refer to # footnote on Page 5-132.

© 2022 Frontier Communications Parent, Inc. All rights reserved

5 SPECIAL ACCESS (Cont'd)

5.6 Rate Regulations (Cont'd)

5.6.19 DS3 Term Volume Plan# (Cont'd)

Terms and Conditions

(1) The DS3 TVP includes only SALs associated with Protected Individual DS3s without Company Electronics or Protected Individual DS3s with Company Electronics as set forth in Section 5.7.22 following (**Eligible DS3 Services**). No other DS3 offerings as set forth in this or other sections of this Guide will be included in the DS3 TVP.

(2) Subsequent to initial enrollment to the DS3 TVP under (B) preceding, the customer may, at any time during the Term Commitment, purchase additional DS3 SALs and choose to include them in the DS3 TVP. The additional SALs will be billed at the same rate level as all of the other DS3 SALs in the DS3 TVP. The customer may also choose to submit ASRs converting existing Eligible DS3 Services not currently in the DS3 TVP to the DS3 TVP, or to submit ASRs converting existing DS3 services in the DS3 TVP to month to month or other discount plans. Rate levels for DS3 SALS in a DS3 TVP are set forth in Section 5.7.22 following and are determined by the Term Commitment and DS3 Commitment Quantity for the TVP. The addition of new DS3 SALs to the DS3 TVP or removal of DS3 SALs from the DS3 TVP does not change the DS3 Commitment Quantity.

Service availability limited. Refer to # footnote on Page 5-132.

© 2022 Frontier Communications Parent, Inc. All rights reserved

5 SPECIAL ACCESS (Cont'd)

5.6 Rate Regulations (Cont'd)

5.6.19 DS3 Term Volume Plan# (Cont'd)

(E) Annual Review

(1) On the anniversary date of the customer's DS3 TVP, the Telephone Company will conduct an Annual Review to determine if the customer has met its DS3 Commitment Quantity of DS3 SALs for the prior twelve (12) months. For purposes of conducting the Annual Review, the Telephone Company will develop an average number of DS3 SALs that were in-plan over the prior 12 months by first summing the actual number of DS3 SALs that were in-plan for each of the prior 12 months and then dividing that total by twelve (12). The anniversary date shall be determined as set forth in (B) (1) (a) preceding.

(2) For purposes of the Annual Review, an allowance of up to three percent (3%) below the committed number of in-service DS3 SALs (rounded to the nearest DS3) will be considered as having met the DS3 Commitment Amount. The DS3 Commitment Quantity less the three percent (3%) allowance shall be defined as the **Minimum DS3 Commitment Quantity**. For example, the Minimum DS3 Commitment Quantity for 48 DS3 SALs is considered to be met if the average number of in-plan DS3 SALs determined at the Annual Review is no less than 47 (e.g., 48 DS3 SALs less 3% allowance = 46.56 and then rounded up to 47 SALs). The average number of in-plan DS3 SALs determined at the Annual Review may exceed the DS3 Commitment Quantity, subject to (E) (4) and (E) (5) following.

(3) Where the average number of in-plan DS3 SALs at the time of the Annual Review is less than the Minimum DS3 Commitment Quantity determined in (E) (2) preceding (i.e., customer has not met its DS3 Commitment Quantity, less the 3% allowance), a penalty as set forth under (F) following will be assessed.

(4) Where the average quantity of in-plan DS3 SALs at the time of the Annual Review is equal to the customer's Minimum DS3 Commitment Quantity (i.e., customer has met its DS3 Commitment Quantity. less the 3% allowance), or exceeds the DS3 Commitment Quantity by no more than thirty percent (30%), no penalty applies. The current DS3 Commitment Quantity will continue for the remainder of the TVP Term Commitment unless otherwise adjusted under this Section (E) and (G) following.

Service availability limited. Refer to # footnote on Page 5-132.

© 2022 Frontier Communications Parent, Inc. All rights reserved

5 SPECIAL ACCESS (Cont'd)

5.6 Rate Regulations (Cont'd)

5.6.19 DS3 Term Volume Plan# (Cont'd)

(E) Annual Review (Cont'd)

(5) Where the average quantity of in-plan DS3 SALs at the time of the Annual Review exceeds the DS3 Commitment Quantity by more than thirty percent (30%), the DS3 Commitment Quantity will be automatically reset by the Telephone Company to a level that is equal to the existing DS3 Commitment Quantity of DS3 SALs plus 50% of the number of DS3 SALs that are in excess of the current DS3 Commitment Quantity rounded to the next DS3 SAL. For example, if the existing DS3 Commitment Quantity at the time of Annual Review is 100 DS3 SALs, and the average in-plan quantity at the time of Annual Review is 137 DS3 SALs, the new DS3 Commitment Quantity will be set at 119 SALS (100 + (37 x .5) = 118.5 DS3 SALs rounded to the nearest whole number) and will apply for the remainder of the Term Commitment unless otherwise adjusted under this Section (E).

(6) Within thirty (30) days after completion of an Annual Review, the customer has the option to reduce its DS3 Commitment Quantity under the Buy Down option described in (G) (4) following. Should the Annual Review result in the automatic increase of the DS3 Minimum Commitment Quantity as described in (E)(5) above, such increase will be applied before the customer may exercise the Buy Down option.. The reduced Commitment Level will be utilized for administering the terms and conditions in this Section 5.6.19 for the remainder of the Term Commitment. Buy Down provisions will be applied after application of any Shortfall Penalties due as a result of that Annual Review. The customer's exercise of the Buy Down provisions shall not relieve the customer of any Shortfall Penalties that are assessed by Telephone Company prior to the exercise of the Buy-Down. No adjustment to prior billing will occur, and no credits will be given for reduction to the DS3 Commitment Quantity under the Buy Down option.

(F) Shortfall Penalties for Failing To Meet the Commitment Level

When the average number of in-plan DS3 SALs at the Annual Review is less than the Minimum DS3 Commitment Quantity, as determined in (E)(2) preceding, a shortfall penalty applies. The shortfall penalty is calculated by multiplying the following:

(i) TVP rate for the predominant service type purchased by the customer (for example, if sixty percent (60%) of the customer's DS3 SALs included in the DS3 TVP are End User DS3 SALs with Company Electronics, then the rate for End User DS3 SALs with Company Electronics shall apply) by

(ii) The Minimum DS3 Commitment Quantity minus the average in-service quantity of DS3 SALs by

(iii) twelve (12) months

Service availability limited. Refer to # footnote on Page 5-132.

© 2022 Frontier Communications Parent, Inc. All rights reserved

5 SPECIAL ACCESS (Cont'd)

5.6 Rate Regulations (Cont'd)

5.6.19 DS3 Term Volume Plan# (Cont'd)

(F) Shortfall Penalties for Failing To Meet the Commitment Level (Cont'd)

For example, a customer that has predominantly End User DS3 SALs with Company Electronics would incur the following shortfall penalty if it failed to meet its Minimum DS3 Commitment Quantity as calculated under (E) (2) preceding at the Annual Review. Assume the following circumstances occurred.

- Current commitment is 101 circuits.
- Average quantity of In-service DS3 SALs at Annual Review = 90
- Minimum DS3 SAL requirement is 101 less 3%, or 98 circuits
- Shortfall is 98 - 90 = 8
- Rate for predominant type of DS3 SAL is $975
- Shortfall penalty amount is 8 x $975 x 12 = $93,600

(G) Changes to Commitment Level

(1) At any time during the Term Commitment, the customer may increase the DS3 Commitment Quantity to achieve a higher Commitment Level. Such request must be submitted in writing to the Telephone Company in accordance with the same requirements used for initial enrollment to DS3 TVP under (B) preceding. The rates associated with the increased DS3 Commitment Quantity are effective upon the enrollment date specified in the customer's written subscription to increase the DS3 Commitment Quantity. No retroactive adjustment prior to the subscription date for the increased DS3 Commitment Quantity will be made for any additional discount that may be associated with the customer-initiated increase in Commitment Level.

(2) When the DS3 Commitment Quantity for the TVP is reduced under (G) (4) following for a Buy-Down of the DS3 Commitment Quantity, the DS3 Commitment Quantity resulting from the Buy-Down will become the DS3 Commitment Quantity for determining the Commitment Level and rates going forward, and DS3 Commitment Quantity for the Annual Review(s) going forward.

Service availability limited. Refer to # footnote on Page 5-132.

© 2022 Frontier Communications Parent, Inc. All rights reserved

5 SPECIAL ACCESS (Cont'd)

5.6 Rate Regulations (Cont'd)

5.6.19 DS3 Term Volume Plan# (Cont'd)

(G) Changes to Commitment Level (Cont'd)

(4) Within 30 days after completion of the Annual Review, the customer may reduce (**Buy-Down**) its DS3 Commitment Quantity. Customers may exercise the Buy-Down option by notifying the Telephone Company in writing and paying an amount equal to twenty percent (20%) of the recurring monthly charges for the remainder of the Term Commitment for each DS3 SAL that is removed from the DS3 Commitment Quantity. The monthly rate used to calculate the Buy-Down penalty is the DS3 SAL rate for the predominant type of DS3 SAL as defined in (F) preceding. The following is an example of calculation of the Buy-Down option. Assume the following:

Monthly rate for the predominant type of DS3 SAL is the End User SAL with Company Electronics at: $975
Remaining months in plan: 36
Number of circuits reduced: 8

The Buy Down amount would be $975 x 36 x 8 x 20% Buy Down = $56,160.

(H) TVP Term Commitment Extension Option

(1) Prior to expiration of its DS3 TVP, the customer may convert its existing DS3 TVP to a new DS3 TVP of equal or greater Term Commitment. The effective date of the conversion to a new DS3 TVP of equal or greater Term Commitment will be the subscription date for the new DS3 TVP. Written subscription for the conversion must be submitted by the customer in the same manner as an initial subscription as described in (B) preceding. The customer may request Conversion Time-In-Service-Credit (**C-TISC**) for the period of time that the prior DS3 TVP was in effect, beginning with the date of subscription to the prior DS3 TVP and ending with the date of subscription to the new DS3 TVP. C-TISC reduces the time for which the new DS3 TVP is subject to termination liability under (K) following. For example, if a customer converts to a new five (5) year DS3 TVP after the first twenty-four (24) months of a three (3) year Term Commitment, the customer is eligible for up to 24 months of C-TISC. The amount of C-TISC must be specified by the customer at the time of subscription to the new plan in accordance with (K) (2) following.

(2) Prior to expiration of its DS3 TVP Term Commitment, if the customer converts its existing DS3 TVP to a new DS3 TVP of lesser Term Commitment than its current DS3 TVP, this will be a discontinuance of the current DS3 TVP and termination liability will apply as described in (K) following. The customer will be deemed to have subscribed to a new DS3 TVP with the lesser Term Commitment effective on the date of disconnection of the existing DS3 TVP. All Terms and Conditions in this Section 5.6.19 will apply to such new DS3 TVP with the lesser Term Commitment.

Service availability limited. Refer to # footnote on Page 5-132.

© 2022 Frontier Communications Parent, Inc. All rights reserved

5 SPECIAL ACCESS (Cont'd)

5.6 Rate Regulations (Cont'd)

5.6.19 DS3 Term Volume Plan# (Cont'd)

TVP Renewal Options

(1) At the expiration of the TVP Term Commitment, the customer may select a new DS3 TVP or may convert to any other payment plan offered in this Guide for DS3 Service. If the customer fails to make an election, the Telephone Company will continue DS3 TVP billing based on the current Commitment Level and Term Commitment for sixty (60) calendar days beyond the scheduled expiration date of the DS3 TVP or until an election is made.

(2) If the customer does not select a new DS3 TVP or convert to another payment plan within sixty (60) calendar days beyond the scheduled expiration date, the current DS3 TVP will be automatically renewed at the DS3 Commitment Quantity and Term Commitment in effect on the expiration date, and a new DS3 TVP term will begin. The effective date of the new DS3 TVP is the same date on which the old DS3 TVP expires.

(3) All terms and conditions under this Section 5.6.19, including termination liabilities, will apply to the renewed DS3 TVP.

(4) If the customer chooses to convert to a term plan option other than a DS3 TVP, this election will be treated as a disconnect of the existing service and installation of a new service, and all applicable rates, terms, conditions, ordering processes, and obligations associated with the new service option will apply. However, installation charges do not apply to those DS3 SALs that are in service on the date that they are converted from the DS3 TVP to the other term plan.

Service availability limited. Refer to # footnote on Page 5-132.

© 2022 Frontier Communications Parent, Inc. All rights reserved

5 SPECIAL ACCESS (Cont'd)

5.6 Rate Regulations (Cont'd)

5.6.19 DS3 Term Volume Plan# (Cont'd)

(J) Upgrade to Equal or Higher Speed Service

(1) During the Term Commitment, the customer may upgrade DS3 service under a DS3 TVP to an equal or higher speed service by disconnecting the DS3 Service under the DS3 TVP and installing the upgraded service in accordance with the terms and conditions for that service. The upgraded service is subject to all terms, conditions, rates, and charges for the upgraded service as specified in the applicable sections of this Guide.

(2) Customer will qualify for adjustment of their DS3 Commitment Quantity, as set forth in (J) (3) following, if customer is unable to meet the Minimum DS3 Commitment Quantity and is subject to shortfall penalties as a direct result of its discontinuation of DS3 SALs which are upgraded to an equal or higher speed service. Customer will qualify for such adjustment to its DS3 Commitment Quantity only if the following terms and conditions are met:

(a) Both the discontinued service and the upgraded service are provided solely by the Telephone Company under this Guide.

(b) The total bandwidth of the upgraded service is equal to or greater than the total bandwidth of the discontinued service. For example, if two (2) in-service DS3 SALs are discontinued and replaced by an OC-3 level SONET service (equivalent to 3 DS3s), the customer would be eligible to receive credit for two (2) DS3 SALs under this provision.

(c) The orders to disconnect the existing service and install the upgraded service are placed at the same time and with due dates that are within ninety (90) days of each other.

(d) The Term Commitment for the upgraded service must be equal to or greater than the Term Commitment for the discontinued service, except when an equal to or greater than Term Commitment period is not available under the upgraded service, in which case the longest Term Commitment period offered on the upgraded service must be selected.

(e) The originating and terminating locations of the service being upgraded are the same originating and termination locations for the replaced (upgraded) service.

Service availability limited. Refer to # footnote on Page 5-132.

© 2022 Frontier Communications Parent, Inc. All rights reserved

5 SPECIAL ACCESS (Cont'd)

5.6 Rate Regulations (Cont'd)

5.6.19 DS3 Term Volume Plan# (Cont'd)

(J) Upgrade to Equal or Higher Speed Service (Cont'd)

(3) In addition to (2) (a) through (e) preceding, the customer must provide written notice of the upgrade to the Telephone Company for its use during the Annual Review. Written notification must be made at the time the customer orders the upgrade and/or thirty (30) calendar days following the Annual Review as described in (E) preceding. The notification must be received by the Telephone Company within the allotted time, or the customer may be subject to a shortfall penalty if it fails to meet the Minimum DS3 Commitment Quantity for the Annual Review period. Such notice must include order number information, including the purchase order number (**PON**), of each disconnected service that was upgraded during the Annual Review period. Failure to provide written notification to the Telephone Company within the allotted time will result in the customer forfeiting any credit for the upgrade that would otherwise apply.

(4) DS3 SALs that qualify as upgrades under (1) through (3) preceding will be added to the customer's actual in-plan DS3 SAL counts for the purpose of determining whether the customer met the Minimum DS3 Commitment Quantity for the remainder of the TVP term. For example, if the customer has a DS3 Commitment Quantity of 155 DS3 SALs and is eligible for 20 DS3 SAL upgrades to a high speed service, the customer will have met the Minimum DS3 Commitment Quantity if their average in-service quantity of DS3 SALs is equal to or greater than 130 DS3 SALs (e.g., 155 less 3% (5 DS3 SALs) less 20 DS3 SALs equals 130 DS3 SALs).

(K) Termination Liability

(1) When the entire DS3 TVP is discontinued prior to the end of the Term Commitment, termination liability applies to each DS3 SAL that is in-plan on the date of discontinuance. Termination liability charges apply from the date of discontinuance to the end of the Term Commitment of the DS3 TVP. When applicable, termination liability is equal to one hundred percent (100%) of the total monthly recurring charges for the remaining portion of the first year and fifteen percent (15%) of the total monthly recurring charges for the remainder of the Term Commitment. The monthly rates used to calculate termination liability are the monthly rates that would otherwise apply had the DS3 TVP not been discontinued (i. e., charges based on current Commitment Level and Term Commitment at the time of discontinuance).

Service availability limited. Refer to # footnote on Page 5-132.

© 2022 Frontier Communications Parent, Inc. All rights reserved

5 SPECIAL ACCESS (Cont'd)

5.6 Rate Regulations (Cont'd)

5.6.19 DS3 Term Volume Plan# (Cont'd)

(K) Termination Liability (Cont'd)

(2) TISC

(a) TISC reduces the time for which the new DS3 TVP is subject to termination liability under (K)(1) preceding. TISC will be granted based on the longest in service time of any DS3 circuit being converted and the Term Commitment of the TVP as shown in the following table:

DS3 SAL Time In-Service	TVP Plan Term	TISC Allowance
24 to 36 months	3 Years or Longer	6 months credit
Over 36 months	3 Years	6 months credit
Over 36 months	5 Years or Longer	12 months credit

For example, if the customer had SALs with in service times of 11 months, 18 months, 26 months, and 48 months and subscribed to a 3-Year TVP, they would be eligible for 6 months of TISC, as set forth in the table above. If that same customer subscribed to a 5-Year TVP, they would be eligible for 12 months TISC.

(b) In order to receive TISC, the customer must have requested TISC at the time of initial subscription to the DS3 TVP under (B) preceding by providing the circuit ID and Service Establishment Date (**SED**) of the qualifying circuit.

(c) The maximum amount of TISC available under this Section 5.6.19 is twelve (12) months. TISC will be applied to the end of the Commitment Period. TISC reduces the number of months from the end of the selected Commitment Period to which termination liability charges are applicable for the purposes of calculating any Termination Liability that may be applied under this Section (K). For example, if the customer qualifies for 12 months of TISC as described above, and cancels a 5-Year (60 months) TVP in the 36th month of the plan, the termination liability will be calculated as if the Term Commitment for the TVP was 48 months. The customer would be liable for 12 months of Termination Liability at 15% of the applicable rate.

(d) The customer may also receive C-TISC as a result of converting its DS3 TVP to a new DS3 TVP under (H) preceding. For example, if the customer in the example described in (K)(2)(c) preceding was also eligible for 12 months of C-TISC (i.e., 12 months of TISC and 12 months of C-TISC), the total credit received by the customer would be 24 months. Termination liability would be calculated as if the Commitment Term of the TVP were: 60 months original Term Commitment – 24 months total TISC = 36 months, and no Termination Liability charges would apply.

Service availability limited. Refer to # footnote on Page 5-132.

© 2022 Frontier Communications Parent, Inc. All rights reserved

5 SPECIAL ACCESS (Cont'd)

5.6 Rate Regulations (Cont'd)

5.6.19 DS3 Term Volume Plan# (Cont'd)

(L) Termination Without Liability

(1) Subject to the terms and conditions set forth in this Section 5.6.19, including any shortfall penalties that might apply for failing to meet the Minimum DS3 Commitment Quantity, Minimum Period charges, and all other applicable requirements and penalties as set forth in other sections of this Guide, individual DS3 SALs may be disconnected under the DS3 TVP without the application of termination liability charges.

(2) Reserved for Future Use (C)

Minimum Period Charges

A one (1) year minimum period will apply to all new DS3 SALs that are added after the DS3 TVP enrollment date. If such service is disconnected prior to completion of the first year following establishment of such service, a charge equal to 100% of the monthly recurring charge for such service applies for the balance of the minimum period. Minimum period charges are in addition to any termination liabilities that may be assessed in accordance with (K)(1) preceding, and no Time in Service Credits are applicable for the minimum period. For example, assume that the customer subscribes to DS3 TVP on the first day of January and subsequently orders a new service under its DS3 TVP on the first day of February in the same year. Also assume that the customer disconnects that same service seven (7) months later and that the monthly recurring charge for that service at the time of the disconnection is $900. Further, assume that the customer continues to be enrolled in its DS3 TVP. The Minimum Period Charge will be the five (5) remaining months x $900 = $4,500 Minimum Period liability. DS3 SALs that are already in-service at the time of initial subscription to TVP are not subject to the 1 year minimum period under this (K)(3).

Service availability limited. Refer to # footnote on Page 5-132.

© 2024 Frontier Communications Parent, Inc. All rights reserved

5 SPECIAL ACCESS (Cont'd)

5.6 Rate Regulations (Cont'd)

5.6.19 DS3 Term Volume Plan# (Cont'd)

Rate Changes

The Telephone Company may change rates for any or all of the DS3 TVP SAL rate elements at any time. Subject to the provisions of (L) (2) preceding, the new rates will apply for the remainder of the TVP Term.

(O) TVP Nonrecurring Charge

With the exception of converting an existing DS3 SAL to a DS3 TVP under (B) (3) preceding, nonrecurring charges apply as specified in this or other sections of this Guide.

Service availability limited. Refer to # footnote on Page 5-132.

© 2022 Frontier Communications Parent, Inc. All rights reserved

5 SPECIAL ACCESS (Cont'd)

5.7 Rates and Charges

5.7.1 Nonrecurring Charges

Special Access Ordering Charges

Jurisdiction	Design Change Per ASR/Per Occurrence	
All States	$2,362.70	(C)

© 2024 Frontier Communications Parent, Inc. All rights reserved

5. SPECIAL ACCESS (Cont'd)

5.7 Rates and Charges (Cont'd)

5.7.2 Voiceband Facilities

(A) Standard Arrangements

	Special Access Line (Secondary CDL) Competitive			
Jurisdiction	Nonrecurring Charge	Two-Wire Monthly Rate	Four-Wire Monthly Rate	
California-WC	$3,937.84	$1,942.89	$2,914.42	(C)
Illinois	3,937.84	389.81	517.48	
Indiana	3,937.84	493.10	779.77	
Michigan	3,937.84	456.79	673.34	
N Carolina	3,937.84	467.88	693.90	
Ohio	3,937.84	493.10	779.77	
S Carolina	3,937.84	534.02	723.06	
Wisconsin	3,937.84	405.58	605.69	(C)

© 2024 Frontier Communications Parent, Inc. All rights reserved

5. SPECIAL ACCESS (Cont'd)

5.7 Rates and Charges (Cont'd)

(M)

5.7.2 Reserved

© 2022 Frontier Communications Parent, Inc. All rights reserved.

5. SPECIAL ACCESS (Cont'd)

5.7 Rates and Charges (Cont'd)

5.7.2 Voiceband Facilities (Cont'd)

(A) Standard Arrangements (Cont'd)

Jurisdiction	Special Transport (Per Airline Mile) Monthly Rate	Special Access Line (IC CDL) Nonrecurring Charge	Two-Wire Monthly Rate	Four-Wire Monthly Rate	
California-WC	$70.96	$3,150.28	$1,942.93	$2,914.49	(C)
Illinois	44.93	3,150.28	389.85	517.43	
Indiana	89.86	3,150.28	493.02	779.69	
Michigan	61.51	3,150.28	456.79	673.38	
N Carolina All Price Bands	77.21	3,150.28	534.02	844.28	
Ohio	89.79	3,150.28	493.10	779.77	
S Carolina	70.86	3,150.28	534.02	723.06	
Wisconsin	51.19	3,150.28	405.58	605.69	

(C)

© 2024 Frontier Communications Parent, Inc. All rights reserved.

5. SPECIAL ACCESS (Cont'd)

5.7 Rates and Charges (Cont'd)

5.7.2 Reserved (M)

© 2022 Frontier Communications Parent, Inc. All rights reserved.

5 SPECIAL ACCESS (Cont'd)

5.7 Rates and Charges (Cont'd)

5.7.2 Voiceband Facilities (Cont'd)

(B) Optional Arrangements

Jurisdiction	Supplemental Features Multipoint Data Bridging (Per Port) Monthly Rate	Voice Conference Bridging (Per Port) Monthly Rate	
California-WC	8.00	8.00	(D)
			(D)
			(D)
			(D)
Illinois	8.00	8.00	
Indiana			
Price Band A	9.60	9.60	
Price Band B	9.60	9.60	
Price Band C	9.60	9.60	
Michigan	8.00	8.00	

© 2022 Frontier Communications Parent, Inc. All rights reserved

5 SPECIAL ACCESS (Cont'd)

5.7 Rates and Charges (Cont'd)

5.7.2 Voiceband Facilities (Cont'd)

(B) Optional Arrangements (Cont'd)

Jurisdiction	Supplemental Features Multipoint Data Bridging (Per Port) Monthly Rate	Voice Conference Bridging (Per Port) Monthly Rate	
N Carolina			
Price Band A	9.60	9.60	(D)
Price Band B	9.60	9.60	(D)
Price Band C	9.60	9.60	(D)
Ohio			
Price Band A	9.60	9.60	(D)
Price Band B	9.60	9.60	(D)
Price Band C	9.60	9.60	(D)
S Carolina	8.00	8.00	
Wisconsin	8.00	8.00	

© 2022 Frontier Communications Parent, Inc. All rights reserved

5 SPECIAL ACCESS (Cont'd)

5.7 Rates and Charges (Cont'd)

5.7.2 Voiceband Facilities (Cont'd)

(B) Optional Arrangements (Cont'd)

	Supplemental Features Alarm Distribution Bridging		
	Common Equipment Monthly Rate	Per Two-Wire Port Monthly Rate	
Jurisdiction			
California-WC	30.00	2.00	
			(D)
			(D)
			(D)
			(D)
Illinois			
Price Band A	30.00	2.00	
Price Band B	30.00	2.00	
Price Band C	30.00	2.00	
Indiana			
Price Band A	36.00	2.40	
Price Band B	36.00	2.40	
Price Band C	36.00	2.40	
Michigan	30.00	2.00	

© 2022 Frontier Communications Parent, Inc. All rights reserved

5 SPECIAL ACCESS (Cont'd)

5.7 Rates and Charges (Cont'd)

5.7.2 Voiceband Facilities (Cont'd)

(B) Optional Arrangements (Cont'd)

	Supplemental Features Alarm Distribution Bridging		
	Common Equipment Monthly Rate	Per Two-Wire Port Monthly Rate	
Jurisdiction			
N Carolina			
Price Band A	36.00	2.40	(D)
Price Band B	36.00	2.40	(D)
Price Band C	36.00	2.40	(D)
Ohio			
Price Band A	36.00	2.40	(D)
Price Band B	36.00	2.40	(D)
Price Band C	36.00	2.40	(D)
S Carolina	30.00	2.00	
Wisconsin	30.00	2.00	

© 2022 Frontier Communications Parent, Inc. All rights reserved

5 SPECIAL ACCESS (Cont'd)

5.7 Rates and Charges (Cont'd)

5.7.2 Voiceband Facilities (Cont'd)

(B) Optional Arrangements (Cont'd)

Jurisdiction	Supplemental Features Conditioning Arrangements - Data Type C Monthly Rate	Type DA Monthly Rate	
California-WC	1.50	2.00	
			(D)
			(D)
Illinois			
Price Bands, A, B and C	1.50	2.00	
Indiana			
Price Bands, A, B and C	1.80	2.40	
Michigan	1.50	2.00	
N Carolina			
Price Bands, A, B and C	1.80	2.40	
Ohio			
Price Bands, A, B and C	1.80	2.40	
			(D)
			(D)
S Carolina	1.50	2.00	
			(D)
			(D)
Wisconsin	1.50	2.00	

© 2022 Frontier Communications Parent, Inc. All rights reserved

5 SPECIAL ACCESS (Cont'd)

5.7 Rates and Charges (Cont'd)

5.7.2 Voiceband Facilities (Cont'd)

(B) Optional Arrangements (Cont'd)

Jurisdiction	Supplemental Features Conditioning Arrangements - Data Type C – Improved Monthly Rate	
California-WC	30.00	
Price Bands A, B and C	36.00	
		(D)
		(D)
Illinois		
Price Bands A, B and C	30.00	
Indiana		
Price Bands A, B and C	36.00	
Price Cap	30.00	
Michigan	30.00	

© 2022 Frontier Communications Parent, Inc. All rights reserved

5 SPECIAL ACCESS (Cont'd)

5.7 Rates and Charges (Cont'd)

5.7.2 Voiceband Facilities (Cont'd)

(B) Optional Arrangements (Cont'd)

Jurisdiction	Supplemental Features Conditioning Arrangements - Data Type C – Improved Monthly Rate	
N Carolina		
Price Bands A, B and C	36.00	
Ohio		
Price Bands A, B and C	36.00	
		(D)
		(D)
S Carolina	30.00	
		(D)
		(D)
		(D)
Wisconsin	30.00	

© 2022 Frontier Communications Parent, Inc. All rights reserved

5 SPECIAL ACCESS (Cont'd)

5.7 Rates and Charges (Cont'd)

5.7.2 Voiceband Facilities (Cont'd)

(B) Optional Arrangements (Cont'd)

	Supplemental Features Signaling Arrangement		
	Loop Signaling Range Extension, per SAL	Loop or E&M to SF, per SAL	
Jurisdiction	Monthly Rate	Monthly Rate	
California-WC	10.00	16.00	
			(D)
			(D)
Illinois			
Price Bands A, B, and C	10.00	16.00	
Indiana			
Price Bands A, B, and C	12.00	19.20	
Price Cap	10.00	16.00	
Michigan	10.00	16.00	

© 2022 Frontier Communications Parent, Inc. All rights reserved

5 SPECIAL ACCESS (Cont'd)

5.7 Rates and Charges (Cont'd)

5.7.2 Voiceband Facilities (Cont'd)

(B) Optional Arrangements (Cont'd)

	Supplemental Features Signaling Arrangement		
	Loop Signaling Range Extension, per SAL	Loop or E&M to SF, per SAL	
Jurisdiction	Monthly Rate	Monthly Rate	
N Carolina			
Price Bands A, B, and C	12.00	19.20	
Ohio			
Price Bands A, B, and C	12.00	19.20	
			(D)
			(D)
S Carolina	10.00	16.00	
			(D)
			(D)
Wisconsin	10.00	16.00	

© 2022 Frontier Communications Parent, Inc. All rights reserved

5 SPECIAL ACCESS (Cont'd)

5.7 Rates and Charges (Cont'd)

5.7.2 Voiceband Facilities (Cont'd)

(B) Optional Arrangements (Cont'd)

	Supplemental Features Signaling Arrangement		
	E&M to DX, per SAL Monthly Rate	E&M to Loop, per SAL Monthly Rate	
Jurisdiction			
California-WC	14.00	12.00	
			(D)
			(D)
Illinois			
Price Bands A, B, and C	14.00	12.00	
Indiana			
Price Bands A, B, and C	16.80	14.40	
Michigan	14.00	12.00	

© 2022 Frontier Communications Parent, Inc. All rights reserved

5 SPECIAL ACCESS (Cont'd)

5.7 Rates and Charges (Cont'd)

5.7.2 Voiceband Facilities (Cont'd)

(B) Optional Arrangements (Cont'd)

Jurisdiction	Supplemental Features Signaling Arrangement E&M to DX, per SAL Monthly Rate	Supplemental Features Signaling Arrangement E&M to Loop, per SAL Monthly Rate	
N Carolina			
Price Bands A, B, and C	16.80	14.40	
Ohio			
Price Bands A, B, and C	16.80	14.40	
			(D)
			(D)
S Carolina	14.00	12.00	
			(D)
			(D)
Wisconsin	14.00	12.00	

© 2022 Frontier Communications Parent, Inc. All rights reserved

5 SPECIAL ACCESS (Cont'd)

5.7 Rates and Charges (Cont'd)

5.7.2 Voiceband Facilities (Cont'd)

(B) Optional Arrangements (Cont'd)

	Supplemental Features Signaling Arrangement		
	Loop or E&M to PCM, per SAL	Automatic Ringdown, per SAL	
	Monthly Rate	Monthly Rate	
Jurisdiction			
California-WC	4.00	10.00	
			(D)
			(D)
Illinois			
Price Bands A, B, and C	4.00	10.00	
Indiana			
Price Bands A, B, and C	4.80	12.00	
Michigan	4.00	10.00	

© 2022 Frontier Communications Parent, Inc. All rights reserved

5 SPECIAL ACCESS (Cont'd)

5.7 Rates and Charges (Cont'd)

5.7.2 Voiceband Facilities (Cont'd)

(B) Optional Arrangements (Cont'd)

	Supplemental Features Signaling Arrangement		
	Loop or E&M to PCM, per SAL	Automatic Ringdown, per SAL	
	Monthly Rate	Monthly Rate	
Jurisdiction			
N Carolina			
Price Bands A, B, and C	4.80	12.00	(D)
			(D)
Ohio			
Price Bands A, B, and C	4.80	12.00	(D)
			(D)

© 2022 Frontier Communications Parent, Inc. All rights reserved

5 SPECIAL ACCESS (Cont'd)

5.7 Rates and Charges (Cont'd)

5.7.2 Voiceband Facilities (Cont'd)

(B) Optional Arrangements (Cont'd)

	Supplemental Features Echo Control Echo Suppression, per circuit *	Echo Canceller, per circuit	
	Monthly Rate	Monthly Rate	
Jurisdiction			
California-WC	30.00	85.00	
			(D) (D)
Illinois Price Bands A, B, and C	30.00	85.00	
Indiana Price Bands A, B, and C	36.00	102.00	
Michigan	30.00	85.00	

* Obsolete and is applicable only to circuits so equipped prior to January 1, 1987.

© 2022 Frontier Communications Parent, Inc. All rights reserved

5 SPECIAL ACCESS (Cont'd)

5.7 Rates and Charges (Cont'd)

5.7.2 Voiceband Facilities (Cont'd)

(B) Optional Arrangements (Cont'd)

	Supplemental Features Echo Control Echo Suppression, per circuit * Monthly Rate	Echo Canceller, per circuit Monthly Rate	
Jurisdiction			
N Carolina			
Price Bands A, B, and C	36.00	102.00	
Ohio			
Price Bands A, B, and C	36.00	102.00	
			(D) (D)
S Carolina	30.00	85.00	
			(D) (D)
Wisconsin	30.00	85.00	

* Obsolete and is applicable only to circuits so equipped prior to January 1, 1987.

© 2022 Frontier Communications Parent, Inc. All rights reserved

5 SPECIAL ACCESS (Cont'd)

5.7 Rates and Charges (Cont'd)

5.7.2 Voiceband Facilities (Cont'd)

(B) Optional Arrangements (Cont'd)

Supplemental Features
Voiceband Facility Switching Arrangement

Jurisdiction	Monthly Rate	
California-WC	7.00	
		(D)
		(D)
Illinois		
Price Bands A, B, and C	7.00	
Indiana		
Price Bands A, B, and C	8.40	
Michigan	7.00	

© 2022 Frontier Communications Parent, Inc. All rights reserved

5 SPECIAL ACCESS (Cont'd)

5.7 Rates and Charges (Cont'd)

5.7.2 Voiceband Facilities (Cont'd)

(B) Optional Arrangements (Cont'd)

Jurisdiction	Supplemental Features Voiceband Facility Switching Arrangement Monthly Rate	
N Carolina		
Price Bands A, B, and C	8.40	
Ohio		
Price Bands A, B, and C	8.40	
		(D) (D)
S Carolina	7.00	
		(D) (D)
Wisconsin	7.00	

© 2022 Frontier Communications Parent, Inc. All rights reserved

5 SPECIAL ACCESS (Cont'd)

5.7 Rates and Charges (Cont'd)

5.7.2 Voiceband Facilities (Cont'd)

(B) Optional Arrangements (Cont'd)

	Supplemental Features		
	Improved Return Loss, Per SAL	Improved Termination Option, Per SAL	
	Monthly Rate	Monthly Rate	
Jurisdiction			
California-WC	3.75	10.00	
			(D)
			(D)
Illinois			
Price Bands A, B, and C	3.75	10.00	
Indiana			
Price Bands A, B, and C	4.50	12.00	
Michigan	3.75	10.00	

© 2022 Frontier Communications Parent, Inc. All rights reserved

5 SPECIAL ACCESS (Cont'd)

5.7 Rates and Charges (Cont'd)

5.7.2 Voiceband Facilities (Cont'd)

(B) Optional Arrangements (Cont'd)

	Supplemental Features		
	Improved Return Loss, Per SAL	Improved Termination Option, Per SAL	
	Monthly Rate	Monthly Rate	
Jurisdiction			
N Carolina			
Price Bands A, B, and C	4.50	12.00	
Ohio			
Price Bands A, B, and C	4.50	12.00	
			(D)
			(D)
S Carolina	3.75	10.00	
			(D)
			(D)
Wisconsin	3.75	10.00	

© 2022 Frontier Communications Parent, Inc. All rights reserved

5 SPECIAL ACCESS (Cont'd)

5.7 Rates and Charges (Cont'd)

5.7.2 Voiceband Facilities (Cont'd)

(B) Optional Arrangements (Cont'd)

Supplemental Features
Improved Equal Level Echo Path Loss, Per SAL

Jurisdiction	Monthly Rate	
California-WC	3.75	
		(D)
		(D)
Illinois		
Price Bands A, B, and C	3.75	
Indiana		
Price Bands A, B, and C	4.50	
Michigan	3.75	

© 2022 Frontier Communications Parent, Inc. All rights reserved

5 SPECIAL ACCESS (Cont'd)

5.7 Rates and Charges (Cont'd)

5.7.2 Voiceband Facilities (Cont'd)

(B) Optional Arrangements (Cont'd)

Supplemental Features
Improved Equal Level Echo Path Loss, Per SAL

Jurisdiction	Monthly Rate	
N Carolina		
Price Bands A, B, and C	4.50	
Ohio		
Price Bands A, B, and C	4.50	
		(D)
		(D)
S Carolina	3.75	
		(D)
		(D)
Wisconsin	3.75	

© 2022 Frontier Communications Parent, Inc. All rights reserved

5. SPECIAL ACCESS (Cont'd)

5.7 Rates and Charges (Cont'd)

5.7.3 Program Audio Facilities

(A) Standard Arrangements - (200-3500 Hz)

Jurisdiction	Special Access Line (Secondary CDL) Nonrecurring Charge	Monthly Rate	Daily Rate	
California-WC				
Competitive	250.00	67.64	6.77	
				(D)
				(D)
Illinois				
Competitive	250.00	26.80	2.68	
Indiana				
Competitive	250.00	30.02	3.01	
Michigan				
Competitive	250.00	37.31	3.74	
N Carolina				
Competitive	250.00	49.90	5.00	
Ohio				
Competitive	250.00	35.86	3.60	
				(D)
				(D
S Carolina				
Competitive	250.00	36.47	3.66	
				(D)
				(D)
Wisconsin				
Competitive	250.00	36.00	3.60	

.

© 2022 Frontier Communications Parent, Inc. All rights reserved

5. SPECIAL ACCESS (Cont'd)

5.7 Rates and Charges (Cont'd)

5.7.3 Program Audio Facilities (Cont'd)

(A) Standard Arrangements - (200-3500 Hz) (Cont'd)

	Special Transport (Per Airline Mile)		Special Access Line (IC CDL)			
Jurisdiction	Monthly Rate	Daily Rate	Nonrecurring Charge	Monthly Rate	Daily Rate	
California-WC	20.50	2.05	200.00	67.64	6.77	(D) (D) (D) (D)
Illinois						
Price Band A	6.37	0.64	200.00	22.33	2.23	
Price Band B	6.37	0.64	200.00	22.33	2.23	
Price Band C	6.37	0.64	200.00	22.33	2.23	
Indiana						
Price Band A	7.94	0.79	200.00	25.12	2.51	
Price Band B	7.94	0.79	200.00	25.12	2.51	
Price Band C	7.94	0.79	200.00	25.12	2.51	
Michigan	7.88	0.79	200.00	37.31	3.74	

© 2022 Frontier Communications Parent, Inc. All rights reserved

5. SPECIAL ACCESS (Cont'd)

5.7 Rates and Charges (Cont'd)

5.7.3 Program Audio Facilities (Cont'd)

(A) Standard Arrangements - (200-3500 Hz) (Cont'd)

	Special Transport (Per Airline Mile)		Special Access Line (IC CDL)			
Jurisdiction	Monthly Rate	Daily Rate	Nonrecurring Charge	Monthly Rate	Daily Rate	
N Carolina						
Price Band A	$16.26	$1.63	$200.00	$41.74	$4.17	
Price Band B	16.26	1.63	200.00	41.74	4.17	
Price Band C	16.26	1.63	200.00	41.74	4.17	
Ohio						
Price Band A	5.95	0.60	200.00	30.00	3.00	(D)
Price Band B	5.95	0.60	200.00	30.00	3.00	(D)
Price Band C	5.95	0.60	200.00	30.00	3.00	(D)
						(D)
S Carolina	14.16	1.42	200.00	36.47	3.66	(D)
						(D)
						(D)
Wisconsin	9.92	1.00	200.00	36.00	3.60	

© 2022 Frontier Communications Parent, Inc. All rights reserved

5. SPECIAL ACCESS (Cont'd)

5.7 Rates and Charges (Cont'd)

5.7.3 Program Audio Facilities (Cont'd)

(B) Standard Arrangements - (100-5000 Hz)

Jurisdiction	Special Access Line (Secondary CDL) Nonrecurring Charge	Monthly Rate	Daily Rate	
California-WC				
Competitive	250.00	67.64	6.77	
				(D)
				(D)
Illinois				
Competitive	250.00	26.80	2.68	
Indiana				
Competitive	250.00	30.02	3.01	
Michigan				
Competitive	250.00	37.31	3.74	
N Carolina				
Competitive	250.00	49.90	5.00	
Ohio				
Competitive	250.00	35.86	3.60	
				(D)
				(D)
S Carolina				
Competitive	250.00	36.47	3.66	
				(D)
				(D)
Wisconsin				
Competitive	250.00	36.00	3.60	

© 2022 Frontier Communications Parent, Inc. All rights reserved

5. SPECIAL ACCESS (Cont'd)

5.7 Rates and Charges (Cont'd)

5.7.3 Program Audio Facilities (Cont'd)

(B) Standard Arrangements - (100-5000 Hz) (Cont'd)

	Special Transport (Per Airline Mile)		Special Access Line (IC CDL)			
	Monthly Rate	Daily Rate	Nonrecurring Charge	Monthly Rate	Daily Rate	
Jurisdiction						
California-WC	20.50	2.05	200.00	67.64	6.77	
						(D)
						(D)
						(D)
						(D)
Illinois						
Price Band A	6.37	0.64	200.00	22.33	2.23	
Price Band B	6.37	0.64	200.00	22.33	2.23	
Price Band C	6.37	0.64	200.00	22.33	2.23	
Indiana						
Price Band A	7.94	0.79	200.00	25.12	2.51	
Price Band B	7.94	0.79	200.00	25.12	2.51	
Price Band C	7.94	0.79	200.00	25.12	2.51	
Michigan	7.88	0.79	200.00	37.31	3.74	

© 2022 Frontier Communications Parent, Inc. All rights reserved

5. SPECIAL ACCESS (Cont'd)

5.7 Rates and Charges (Cont'd)

5.7.3 Program Audio Facilities (Cont'd)

(B) Standard Arrangements - (100-5000 Hz) (Cont'd)

	Special Transport (Per Airline Mile)		Special Access Line (IC CDL)			
Jurisdiction	Monthly Rate	Daily Rate	Nonrecurring Charge	Monthly Rate	Daily Rate	
N Carolina						
Price Band A	$16.26	$1.63	$200.00	$41.74	$4.17	
Price Band B	16.26	1.63	200.00	41.74	4.17	
Price Band C	16.26	1.63	200.00	41.74	4.17	
Ohio						
Price Band A	5.95	0.60	200.00	30.00	3.00	
Price Band B	5.95	0.60	200.00	30.00	3.00	
Price Band C	5.95	0.60	200.00	30.00	3.00	
						(D)
						(D)
						(D)
						(D
S Carolina	14.16	1.42	200.00	36.47	3.66	
						(D)
						(D)
						(D)
						(D)
Wisconsin	9.92	1.00	200.00	36.00	3.60	

© 2022 Frontier Communications Parent, Inc. All rights reserved

5. SPECIAL ACCESS (Cont'd)

5.7 Rates and Charges (Cont'd)

5.7.3 Program Audio Facilities (Cont'd)

(C) Standard Arrangements - (50-8000 Hz)

	Special Access Line (Secondary CDL)			
	Nonrecurring Charge	Monthly Rate	Daily Rate	
Jurisdiction				
California-WC				
Competitive	250.00	67.64	6.77	
				(D)
				(D)
Illinois				
Competitive	250.00	26.80	2.68	
Indiana				
Competitive	250.00	30.02	3.01	
Michigan				
Competitive	250.00	37.31	3.74	
N Carolina				
Competitive	250.00	49.90	5.00	
Ohio				
Competitive	250.00	35.86	3.60	
				(D)
				(D)
S Carolina				
Competitive	250.00	36.47	3.66	
				(D)
				(D)
Wisconsin				
Competitive	250.00	36.00	3.60	

© 2022 Frontier Communications Parent, Inc. All rights reserved

5. SPECIAL ACCESS (Cont'd)

5.7 Rates and Charges (Cont'd)

5.7.3 Program Audio Facilities (Cont'd)

(C) Standard Arrangements - (50-8000 Hz) (Cont'd)

Jurisdiction	Special Transport (Per Airline Mile) Monthly Rate	Special Transport (Per Airline Mile) Daily Rate	Special Access Line (IC CDL) Nonrecurring Charge	Special Access Line (IC CDL) Monthly Rate	Special Access Line (IC CDL) Daily Rate	
California-WC	20.50	2.05	200.00	67.64	6.77	(D) (D) (D) (D)
Illinois						
Price Band A	6.37	0.64	200.00	22.33	2.23	
Price Band B	6.37	0.64	200.00	22.33	2.23	
Price Band C	6.37	0.64	200.00	22.33	2.23	
Indiana						
Price Band A	7.94	0.79	200.00	25.12	2.51	
Price Band B	7.94	0.79	200.00	25.12	2.51	
Price Band C	7.94	0.79	200.00	25.12	2.51	
Michigan	7.88	0.79	200.00	37.31	3.74	

© 2022 Frontier Communications Parent, Inc. All rights reserved

5. SPECIAL ACCESS (Cont'd)

5.7 Rates and Charges (Cont'd)

5.7.3 Program Audio Facilities (Cont'd)

(C) Standard Arrangements - (50-8000 Hz) (Cont'd)

Jurisdiction	Special Transport (Per Airline Mile) Monthly Rate	Special Transport (Per Airline Mile) Daily Rate	Special Access Line (IC CDL) Nonrecurring Charge	Special Access Line (IC CDL) Monthly Rate	Special Access Line (IC CDL) Daily Rate	
N Carolina						
Price Band A	$16.26	$1.63	$200.00	$41.74	$4.17	
Price Band B	16.26	1.63	200.00	41.74	4.17	
Price Band C	16.26	1.63	200.00	41.74	4.17	
Ohio						
Price Band A	5.95	0.60	200.00	30.00	3.00	
Price Band B	5.95	0.60	200.00	30.00	3.00	
Price Band C	5.95	0.60	200.00	30.00	3.00	
						(D)
						(D)
						(D)
						(D)
S Carolina	14.16	1.42	200.00	36.47	3.66	
						(D)
						(D)
						(D)
						(D)
Wisconsin	9.92	1.00	200.00	36.00	3.60	

© 2022 Frontier Communications Parent, Inc. All rights reserved

5. SPECIAL ACCESS (Cont'd)

5.7 Rates and Charges (Cont'd)

5.7.3 Program Audio Facilities (Cont'd)

Standard Arrangements - (50-15000 Hz)

Jurisdiction	Special Access Line (Secondary CDL) Nonrecurring Charge	Monthly Rate	Daily Rate	
California-WC				
Competitive	250.00	67.64	6.77	
				(D)
				(D)
Illinois				
Competitive	250.00	26.80	2.68	
Indiana				
Competitive	250.00	30.02	3.01	
Michigan				
Competitive	250.00	37.31	3.74	
N Carolina				
Competitive	250.00	49.90	5.00	
Ohio				
Competitive	250.00	35.86	3.60	
				(D)
				(D)
S Carolina				
Competitive	250.00	36.47	3.66	
				(D)
				(D)
Wisconsin				
Competitive	250.00	36.00	3.60	

© 2022 Frontier Communications Parent, Inc. All rights reserved

5. SPECIAL ACCESS (Cont'd)

5.7 Rates and Charges (Cont'd)

5.7.3 Program Audio Facilities (Cont'd)

Standard Arrangements - (50-15000 Hz) (Cont'd)

	Special Transport (Per Airline Mile)		Special Access Line (IC CDL)			
	Monthly Rate	Daily Rate	Nonrecurring Charge	Monthly Rate	Daily Rate	
Jurisdiction						
California-WC	20.50	2.05	200.00	67.64	6.77	(D) (D) (D) (D)
Illinois						
Price Band A	6.37	0.64	200.00	22.33	2.23	
Price Band B	6.37	0.64	200.00	22.33	2.23	
Price Band C	6.37	0.64	200.00	22.33	2.23	
Indiana						
Price Band A	7.94	0.79	200.00	25.12	2.51	
Price Band B	7.94	0.79	200.00	25.12	2.51	
Price Band C	7.94	0.79	200.00	25.12	2.51	
Michigan	7.88	0.79	200.00	37.31	3.74	

© 2022 Frontier Communications Parent, Inc. All rights reserved

5. SPECIAL ACCESS (Cont'd)

5.7 Rates and Charges (Cont'd)

5.7.3 Program Audio Facilities (Cont'd)

Standard Arrangements - (50-15000 Hz) (Cont'd)

	Special Transport (Per Airline Mile)		Special Access Line (IC CDL)			
	Monthly Rate	Daily Rate	Nonrecurring Charge	Monthly Rate	Daily Rate	
Jurisdiction						
N Carolina						
Price Band A	$16.26	$1.63	$200.00	$41.74	$4.17	(D)
Price Band B	16.26	1.63	200.00	41.74	4.17	(D)
Price Band C	16.26	1.63	200.00	41.74	4.17	(D)
Ohio						
Price Band A	5.95	0.60	200.00	30.00	3.00	(D)
Price Band B	5.95	0.60	200.00	30.00	3.00	(D)
Price Band C	5.95	0.60	200.00	30.00	3.00	(D)
S Carolina	14.16	1.42	200.00	36.47	3.66	(D)
Wisconsin	9.92	1.00	200.00	36.00	3.60	

© 2022 Frontier Communications Parent, Inc. All rights reserved

5 SPECIAL ACCESS (Cont'd)

5.7 Rates and Charges (Cont'd)

5.7.3 Program Audio Facilities (Cont'd)

(E) Optional Arrangements - (50-15000 Hz Facilities only)

Supplemental Features
Conditioning - Program Audio
Stereo Conditioning, per occurrence

Jurisdiction	Monthly Rate	Daily Rate	
California-WC	1.00	.10	(D)
			(D)
Illinois			
Price Bands A, B, and C	1.00	.10	
Indiana			
Price Bands A, B, and C	1.00	.10	
Michigan	1.00	.10	

© 2022 Frontier Communications Parent, Inc. All rights reserved

5 SPECIAL ACCESS (Cont'd)

5.7 Rates and Charges (Cont'd)

5.7.3 Program Audio Facilities (Cont'd)

(E) Optional Arrangements - (50-15000 Hz Facilities only)

Supplemental Features
Conditioning - Program Audio
Stereo Conditioning, per occurrence

Jurisdiction	Monthly Rate	Daily Rate	
N Carolina			
Price Bands A, B and C	1.00	.10	
Ohio			
Price Bands A, B and C	1.00	.10	
			(D)
	0		(D)
S Carolina	1.00	.10	
			(D)
			(D)
Wisconsin	1.00	.10	

© 2022 Frontier Communications Parent, Inc. All rights reserved

5 SPECIAL ACCESS (Cont'd)

5.7 Rates and Charges (Cont'd)

5.7.3 Program Audio Facilities (Cont'd)

(F) Optional Arrangements - (All Bandwidths)

Supplemental Features
Program Audio Bridging (Per Port)

Jurisdiction	Monthly Rate	Daily Rate	
California-WC	1.00	.10	(D)
			(D)
Illinois			
Price Bands A, B and C	1.00	.10	
Indiana			
Price Bands A, B and C	1.00	.10	
Michigan	1.00	.10	

© 2022 Frontier Communications Parent, Inc. All rights reserved

5 SPECIAL ACCESS (Cont'd)

5.7 Rates and Charges (Cont'd)

5.7.3 Program Audio Facilities (Cont'd)

(F) Optional Arrangements - (All Bandwidths)

Jurisdiction	Supplemental Features Program Audio Bridging (Per Port) Monthly Rate	Daily Rate	
N Carolina			
Price Bands A, B and C	1.00	.10	
Ohio			
Price Bands A, B and C	1.00	.10	
			(D)
			(D)
S Carolina	1.00	.10	
			(D)
			(D)
Wisconsin	1.00	.10	

© 2022 Frontier Communications Parent, Inc. All rights reserved

5 SPECIAL ACCESS (Cont'd)

5.7 Rates and Charges (Cont'd)

5.7.3 Program Audio Facilities (Cont'd)

(F) Optional Arrangements - (All Bandwidths) (Cont'd)

Supplemental Features
Conditioning Program Audio - Zero Loss, Per SAL

Jurisdiction	Monthly Rate	Daily Rate	
California-WC	12.00	1.20	(D)
			(D)
Illinois			
Price Bands A, B and C	12.00	1.20	
Indiana			
Price Bands A, B and C	12.00	1.20	
Michigan	12.00	1.20	

© 2022 Frontier Communications Parent, Inc. All rights reserved

5 SPECIAL ACCESS (Cont'd)

5.7 Rates and Charges (Cont'd)

5.7.3 Program Audio Facilities (Cont'd)

(F) Optional Arrangements - (All Bandwidths) (Cont'd)

Supplemental Features
Conditioning Program Audio - Zero Loss, Per SAL

Jurisdiction	Monthly Rate	Daily Rate	
N Carolina			
Price Bands A, B and C	12.00	1.20	
Ohio			
Price Bands A, B and C	12.00	1.20	
			(D)
			(D)
S Carolina	12.00	1.20	
			(D)
			(D)
Wisconsin	12.00	1.20	

© 2022 Frontier Communications Parent, Inc. All rights reserved

5 SPECIAL ACCESS (Cont'd)

5.7 Rates and Charges (Cont'd)

5.7.4 Video Facilities

© 2022 Frontier Communications Parent, Inc. All rights reserved

5 SPECIAL ACCESS (Cont'd)

5.7 Rates and Charges (Cont'd)

5.7.4 Video Facilities (cont'd)

(B) Video Digital Transport Service – Type II

(1) Standard Arrangements

(a) Up to 45 Mbps - To the hub

Jurisdiction	Minute Sensitive* Initial 1st 5 Min. or Fraction Thereof	Each Add'l Min.	Daily* Rate	Weekly* Rate	Monthly* Rate	
California-WC	NA	NA	NA	NA	NA	(D)
Illinois	NA	NA	NA	NA	NA	
Indiana	NA	NA	NA	NA	NA	
Michigan	NA	NA	NA	NA	NA	
N Carolina	NA	NA	NA	NA	NA	
Ohio	NA	NA	NA	NA	NA	(D)
S Carolina	NA	NA	NA	NA	NA	(D)
Wisconsin	NA	NA	NA	NA	NA	

* Applies to continuous usage.

© 2022 Frontier Communications Parent, Inc. All rights reserved

5 SPECIAL ACCESS (Cont'd)

5.7 Rates and Charges (Cont'd)

5.7.4 Video Facilities (cont'd)

(B) Video Digital Transport Service – Type II (Cont'd)

(1) Standard Arrangements (Cont'd)

(b) 270 Mbps Service

(1) Switched Video Access Line (SVAL)

(a) Unidirectional

Jurisdiction	1-4 Connections Same Location NRC	1-4 Connections Same Location MRC	5 or More Connections Same Location NRC	5 or More Connections Same Location MRC	
California-WC	NA	NA	NA	NA	(D)
Illinois	NA	NA	NA	NA	
Indiana	NA	NA	NA	NA	
Michigan	NA	NA	NA	NA	
N Carolina	NA	NA	NA	NA	
Ohio	NA	NA	NA	NA	(D)
S Carolina	NA	NA	NA	NA	(D)
Wisconsin	NA	NA	NA	NA	

© 2022 Frontier Communications Parent, Inc. All rights reserved

5 SPECIAL ACCESS (Cont'd)

5.7 Rates and Charges (Cont'd)

5.7.4 Video Facilities (cont'd)

(B) Video Digital Transport Service – Type II (Cont'd)

(1) Standard Arrangements (Cont'd)

(b) 270 Mbps Service (Cont'd)

(1) Switched Video Access Line (SVAL) (Cont'd)

(b) Bi-directional #

Jurisdiction	1-4 Connections Same Location NRC	1-4 Connections Same Location MRC	5 or More Connections Same Location NRC	5 or More Connections Same Location MRC	
California-WC	NA	NA	NA	NA	(D)
Illinois	NA	NA	NA	NA	
Indiana	NA	NA	NA	NA	
Michigan	NA	NA	NA	NA	
N Carolina	NA	NA	NA	NA	
Ohio	NA	NA	NA	NA	(D)
S Carolina	NA	NA	NA	NA	(D)
Wisconsin	NA	NA	NA	NA	

Service availability limited. Refer to # footnote on Page 5-17.

© 2022 Frontier Communications Parent, Inc. All rights reserved

5 SPECIAL ACCESS (Cont'd)

5.7 Rates and Charges (Cont'd)

5.7.4 Video Facilities (cont'd)

(B) Video Digital Transport Service – Type II (Cont'd)

(1) Standard Arrangements (Cont'd)

(b) 270 Mbps Service (Cont'd)

(2) Switched Video Port

(a) Unidirectional

	1-4 Connections Same Location		5 or More Connections Same Location		
	NRC	MRC	NRC	MRC	
Jurisdiction					
California-WC	NA	NA	NA	NA	(D)
Illinois	NA	NA	NA	NA	
Indiana	NA	NA	NA	NA	
Michigan	NA	NA	NA	NA	
N Carolina	NA	NA	NA	NA	
Ohio	NA	NA	NA	NA	(D)
S Carolina	NA	NA	NA	NA	(D)
Wisconsin	NA	NA	NA	NA	

© 2022 Frontier Communications Parent, Inc. All rights reserved

5 SPECIAL ACCESS (Cont'd)

5.7 Rates and Charges (Cont'd)

5.7.4 Video Facilities (cont'd)

(B) Video Digital Transport Service – Type II (Cont'd)

(1) Standard Arrangements (Cont'd)

(b) 270 Mbps Service (Cont'd)

(2) Switched Video Port (Cont'd)

(b) Bi-directional #

	1-4 Connections Same Location		5 or More Connections Same Location		
Jurisdiction	NRC	MRC	NRC	MRC	
California-WC	NA	NA	NA	NA	(D)
Illinois	NA	NA	NA	NA	
Indiana	NA	NA	NA	NA	
Michigan	NA	NA	NA	NA	
N Carolina	NA	NA	NA	NA	
Ohio	NA	NA	NA	NA	(D)
S Carolina	NA	NA	NA	NA	(D)
Wisconsin	NA	NA	NA	NA	

Service availability limited. Refer to # footnote on Page 5-17.

© 2022 Frontier Communications Parent, Inc. All rights reserved

5 SPECIAL ACCESS (Cont'd)

5.7 Rates and Charges (Cont'd)

5.7.4 Video Facilities (cont'd)

(B) Video Digital Transport Service – Type II (Cont'd)

(1) Standard Arrangements (Cont'd)

(b) 270 Mbps Service (Cont'd)

(3) Dedicated Video Line (DVL)

	Unidirectional		Bi-directional #		
Jurisdiction	NRC	MRC	NRC	MRC	
California-WC	NA	NA	NA	NA	(D)
Illinois	NA	NA	NA	NA	
Indiana	NA	NA	NA	NA	
Michigan	NA	NA	NA	NA	
N Carolina	NA	NA	NA	NA	
Ohio	NA	NA	NA	NA	(D)
S Carolina	NA	NA	NA	NA	(D)
Wisconsin	NA	NA	NA	NA	

Service availability limited. Refer to # footnote on Page 5-17.

© 2022 Frontier Communications Parent, Inc. All rights reserved

5 SPECIAL ACCESS (Cont'd)

5.7 Rates and Charges (Cont'd)

5.7.4 Video Facilities (cont'd)

(B) Video Digital Transport Service – Type II (Cont'd)

(1) Standard Arrangements (Cont'd)

(b) 270 Mbps Service (Cont'd)

(4) Transport

Jurisdiction	Per Mile	Fixed Per Each 20 Miles	
California-WC	NA	NA	(D)
Illinois	NA	NA	
Indiana	NA	NA	
Michigan	NA	NA	
N Carolina	NA	NA	
Ohio	NA	NA	(D)
S Carolina	NA	NA	(D)
Wisconsin	NA	NA	

© 2022 Frontier Communications Parent, Inc. All rights reserved

5 SPECIAL ACCESS (Cont'd)

5.7 Rates and Charges (Cont'd)

5.7.4 Video Facilities (cont'd)

(B) Video Digital Transport Service – Type II (Cont'd)

(1) Standard Arrangements (Cont'd)

(c) TV1–Analog

(1) Switched Video Access Line (SVAL)

(a) First SVAL#

		Unidirectional NRC	Unidirectional MRC	Bi-directional NRC	Bi-directional MRC	
Indiana	Competitive	625.00	312.00	937.50	518.00	(D)
North Carolina	Competitive	625.00	312.00	937.50	518.00	(D)
Ohio	Competitive	625.00	312.00	937.50	518.00	(D)
Wisconsin	Competitive	625.00	312.00	937.50	518.00	(D)

Associated with a First Switched Video Port

The Price Cap rate previously appeared as the line rate for the state.

© 2022 Frontier Communications Parent, Inc. All rights reserved

5 SPECIAL ACCESS (Cont'd)

5.7 Rates and Charges (Cont'd)

5.7.4 Video Facilities (cont'd)

(B) Video Digital Transport Service – Type II (Cont'd)

(1) Standard Arrangements (Cont'd)

(c) TV1–Analog

(1) Switched Video Access Line (SVAL)

(b) Additional SVAL, Same location@

	Unidirectional		Bi-directional		
	NRC	MRC	NRC	MRC	
Indiana					
Competitive	312.50	302.00	468.75	508.00	(D)
North Carolina					
Competitive	312.50	302.00	468.75	508.00	(D)
Ohio					
Competitive	312.50	302.00	468.75	508.00	(D)
Wisconsin					
Competitive	312.50	302.00	468.75	508.00	(D)

The Price Cap rate previously appeared as the line rate for the state.
@ Associated with an Additional Switched Video Port

© 2022 Frontier Communications Parent, Inc. All rights reserved

5 SPECIAL ACCESS (Cont'd)

5.7 Rates and Charges (Cont'd)

5.7.4 Video Facilities (cont'd)

(B) Video Digital Transport Service – Type II (Cont'd)

(1) Standard Arrangements (Cont'd)

(c) TV1–Analog (Cont'd)

(2) Switched Video Port

(a) First Port #

	Unidirectional		Bi-directional		
	NRC	MRC	NRC	MRC	
Indiana	500.00	309.00	750.00	587.00	
North Carolina	500.00	309.00	750.00	587.00	
Ohio	500.00	309.00	750.00	587.00	(D)
					(D)
Wisconsin	500.00	309.00	750.00	587.00	

Associated with a First SVAL

© 2022 Frontier Communications Parent, Inc. All rights reserved

5 SPECIAL ACCESS (Cont'd)

5.7 Rates and Charges (Cont'd)

5.7.4 Video Facilities (cont'd)

(B) Video Digital Transport Service – Type II (Cont'd)

(1) Standard Arrangements (Cont'd)

(c) TV1–Analog (Cont'd)

(2) Switched Video Port

(b) Additional Port @

	Unidirectional		Bi-directional		
	NRC	MRC	NRC	MRC	
Indiana	250.00	298.00	375.00	577.00	
North Carolina	250.00	298.00	375.00	577.00	
Ohio	250.00	298.00	375.00	577.00	
					(D)
					(D)
Wisconsin	250.00	298.00	375.00	577.00	

@ Associated with an Additional SVAL

© 2022 Frontier Communications Parent, Inc. All rights reserved

5 SPECIAL ACCESS (Cont'd)

5.7 Rates and Charges (Cont'd)

5.7.4 Video Facilities (cont'd)

(B) Video Digital Transport Service – Type II (Cont'd)

(1) Standard Arrangements (Cont'd)

(c) TV1–Analog (Cont'd)

(3) Dedicated Video Line (DVL)

(a) Unidirectional

	First		Additional, Same Location		
	NRC	MRC	NRC	MRC	
Indiana					
Competitive	1250.00	529.00	625.00	525.00	
North Carolina					
Competitive	1250.00	529.00	625.00	525.00	
Ohio					
Competitive	1250.00	529.00	625.00	525.00	(D)
					(D
					(D)
					(D))
Wisconsin					
Competitive	1250.00	529.00	625.00	525.00	

The Price Cap rate previously appeared as the line rate for the state.

© 2022 Frontier Communications Parent, Inc. All rights reserved

5 SPECIAL ACCESS (Cont'd)
5.7 Rates and Charges (Cont'd)

5.7.4 Video Facilities (cont'd)

(B) Video Digital Transport Service – Type II (Cont'd)

(1) Standard Arrangements (Cont'd)

(c) TV1–Analog (Cont'd)

(4) Transport

	Per Mile	Fixed Per Each 20 Miles	
Indiana	17.25	49.75	
North Carolina	17.25	49.75	
Ohio	17.25	49.75	
			(D)
			(D)
Wisconsin	17.25	49.75	

© 2022 Frontier Communications Parent, Inc. All rights reserved

5 SPECIAL ACCESS (Cont'd)

5.7 Rates and Charges (Cont'd)

5.7.4 Video Facilities (cont'd)

(B) Video Digital Transport Service – Type II (Cont'd)

(2) Optional Features

(a) 270 Mbps

(1) Audio

Per Pair of Stereo Channels

	Monthly		Daily		
	NRC	MRC	NRC	MRC	
Jurisdiction					
California-WC	NA	NA	NA	NA	(D)
Illinois	NA	NA	NA	NA	
Indiana	NA	NA	NA	NA	
Michigan	NA	NA	NA	NA	
N Carolina	NA	NA	NA	NA	
Ohio	NA	NA	NA	NA	(D)
S Carolina	NA	NA	NA	NA	(D)
Wisconsin	NA	NA	NA	NA	

© 2022 Frontier Communications Parent, Inc. All rights reserved

5 SPECIAL ACCESS (Cont'd)

5.7 Rates and Charges (Cont'd)

5.7.4 Video Facilities (cont'd)

(B) Video Digital Transport Service – Type II (Cont'd)

(2) Optional Features (Cont'd

(a) 270 Mbps (Cont'd)

(2) Alternate Switching - Manual

Jurisdiction	Per Event	
California-WC	NA	(D)
Illinois	NA	
Indiana	NA	
Michigan	NA	
N Carolina	NA	
Ohio	NA	(D)
S Carolina	NA	(D)
Wisconsin	NA	

© 2022 Frontier Communications Parent, Inc. All rights reserved

5 SPECIAL ACCESS (Cont'd)

5.7 Rates and Charges (Cont'd)

5.7.4 Video Facilities (cont'd)

(B) Video Digital Transport Service – Type II (Cont'd)

(2) Optional Features (Cont'd

(a) 270 Mbps (Cont'd)

(3) Conversions

	Codec Conversion				Format Conversion	
	Hourly*	Daily*	Weekly*	Monthly	Hourly	
Jurisdiction						
California-WC	NA	NA	NA	NA	NA	(D)
Illinois	NA	NA	NA	NA	NA	
Indiana	NA	NA	NA	NA	NA	
Michigan	NA	NA	NA	NA	NA	
N Carolina	NA	NA	NA	NA	NA	
Ohio	NA	NA	NA	NA	NA	(D)
S Carolina	NA	NA	NA	NA	NA	(D)
Wisconsin	NA	NA	NA	NA	NA	

* Applies to continuous usage

© 2022 Frontier Communications Parent, Inc. All rights reserved

5 SPECIAL ACCESS (Cont'd)

5.7 Rates and Charges (Cont'd)

5.7.4 Video Facilities (cont'd)

(B) Video Digital Transport Service – Type II (Cont'd)

(2) Optional Features (Cont'd

(a) 270 Mbps (Cont'd)

(4) Interhub Arrangement

Port		Transport Per Mile
NRC	MRC	

© 2022 Frontier Communications Parent, Inc. All rights reserved

5 SPECIAL ACCESS (Cont'd)

5.7 Rates and Charges (Cont'd)

5.7.4 Video Facilities (cont'd)

(B) Video Digital Transport Service – Type II (Cont'd)

(2) Optional Features (Cont'd

(b) TV1-Analog (Cont'd)

(1) Additional Audio Channels (Maximum 2)

	NRC	MRC	Daily Rate	
Indiana	100.00	16.50	2.50	
N Carolina	100.00	16.50	2.50	
Ohio	100.00	16.50	2.50	(D)
				(D)
Wisconsin	100.00	16.50	2.50	

© 2022 Frontier Communications Parent, Inc. All rights reserved

5 SPECIAL ACCESS (Cont'd)

5.7 Rates and Charges (Cont'd)

5.7.4 Video Facilities (cont'd)

(B) Video Digital Transport Service – Type II (Cont'd)

(2) Optional Features (Cont'd

(b) TV1-Analog (Cont'd)

(2) Alternate Switching, Manual

	Per Event	
Indiana	20.00	
N Carolina	20.00	
Ohio	20.00	
		(D)
		(D)
Wisconsin	20.00	

© 2022 Frontier Communications Parent, Inc. All rights reserved

5 SPECIAL ACCESS (Cont'd)

5.7 Rates and Charges (Cont'd)

5.7.4 Video Facilities (cont'd)

(B) Video Digital Transport Service – Type II (Cont'd)

(2) Optional Features (Cont'd

(b) TV1-Analog (Cont'd)

(3) Conversions

	Codec Conversions				Format Conversions	
	Hourly*	Daily*	Weekly*	Monthly	Hourly	
Indiana	NA	NA	NA	NA	NA	
N Carolina	NA	NA	NA	NA	NA	
Ohio	NA	NA	NA	NA	NA	
						(D)
						(D)
Wisconsin	NA	NA	NA	NA	NA	

* Applies to continuous usage

© 2022 Frontier Communications Parent, Inc. All rights reserved

5 SPECIAL ACCESS (Cont'd)

5.7 Rates and Charges (Cont'd)

5.7.4 Video Facilities (cont'd)

(B) Video Digital Transport Service – Type II (Cont'd)

(2) Optional Features (Cont'd

(b) TV1-Analog (Cont'd)

(4) Interhub Arrangement

	Port		Transport Per Mile	
	NRC	MRC		
Indiana		NA	NA	
N Carolina		NA	NA	
Ohio		NA	NA	
				(D)
				(D)
Wisconsin		NA	NA	

© 2022 Frontier Communications Parent, Inc. All rights reserved

5 SPECIAL ACCESS (Cont'd)

5.7 Rates and Charges (Cont'd)

5.7.4 Video Facilities (cont'd)

(B) Video Digital Transport Service – Type II (Cont'd)

(3) Term Commitment Plan (TCP)#

(a) Up to 45 Mbps - To the hub

Jurisdiction	Monthly Rate, Per SAL 1 Year	3 Year	5 Year	
California-WC	NA	NA	NA	(D)
Illinois	NA	NA	NA	
Indiana	NA	NA	NA	
Michigan	NA	NA	NA	
N Carolina	NA	NA	NA	
Ohio	NA	NA	NA	(D)
S Carolina	NA	NA	NA	(D)
Wisconsin	NA	NA	NA	

Service availability limited. Refer to # footnote on Page 5-73.

© 2022 Frontier Communications Parent, Inc. All rights reserved

5 SPECIAL ACCESS (Cont'd)

5.7 Rates and Charges (Cont'd)

5.7.4 Video Facilities (cont'd)

(B) Video Digital Transport Service – Type II (Cont'd)

(3) Term Commitment Plan (TCP)# (Cont'd)

(b) 270 Mbps Service

(1) Switched Video Access Line (SVAL)

(a) Unidirectional

	1 Year				
	1-4 Connections Same Location		5 or More Connections Same Location		
Jurisdiction	NRC	MRC	NRC	MRC	
California-WC	NA	NA	NA	NA	(D)
Illinois	NA	NA	NA	NA	
Indiana	NA	NA	NA	NA	
Michigan	NA	NA	NA	NA	
N Carolina	NA	NA	NA	NA	
Ohio	NA	NA	NA	NA	(D)
S Carolina	NA	NA	NA	NA	(D)
Wisconsin	NA	NA	NA	NA	

Service availability limited. Refer to # footnote on Page 5-73.

© 2022 Frontier Communications Parent, Inc. All rights reserved

5 SPECIAL ACCESS (Cont'd)

5.7 Rates and Charges (Cont'd)

5.7.4 Video Facilities (cont'd)

(B) Video Digital Transport Service – Type II (Cont'd)

(3) Term Commitment Plan (TCP)# (Cont'd)

(b) 270 Mbps Service (Cont'd)

(1) Switched Video Access Line (SVAL) (Cont'd)

(a) Unidirectional (Cont'd)

2 Years

Jurisdiction	1-4 Connections Same Location NRC	1-4 Connections Same Location MRC	5 or More Connections Same Location NRC	5 or More Connections Same Location MRC	
California-WC	NA	NA	NA	NA	(D)
Illinois	NA	NA	NA	NA	
Indiana	NA	NA	NA	NA	
Michigan	NA	NA	NA	NA	
N Carolina	NA	NA	NA	NA	
Ohio	NA	NA	NA	NA	(D)
S Carolina	NA	NA	NA	NA	(D)
Wisconsin	NA	NA	NA	NA	

Service availability limited. Refer to # footnote on Page 5-73.

© 2022 Frontier Communications Parent, Inc. All rights reserved

5 SPECIAL ACCESS (Cont'd)

5.7 Rates and Charges (Cont'd)

5.7.4 Video Facilities (cont'd)

(B) Video Digital Transport Service – Type II (Cont'd)

(3) Term Commitment Plan (TCP)# (Cont'd)

(b) 270 Mbps Service (Cont'd)

(1) Switched Video Access Line (SVAL) (Cont'd)

(a) Unidirectional (Cont'd)

	3 Years				
	1-4 Connections Same Location		5 or More Connections Same Location		
Jurisdiction	NRC	MRC	NRC	MRC	
California-WC	NA	NA	NA	NA	(D)
Illinois	NA	NA	NA	NA	
Indiana	NA	NA	NA	NA	
Michigan	NA	NA	NA	NA	
N Carolina	NA	NA	NA	NA	
Ohio	NA	NA	NA	NA	(D)
S Carolina	NA	NA	NA	NA	(D)
Wisconsin	NA	NA	NA	NA	

Service availability limited. Refer to # footnote on Page 5-73.

© 2022 Frontier Communications Parent, Inc. All rights reserved

5 SPECIAL ACCESS (Cont'd)

5.7 Rates and Charges (Cont'd)

5.7.4 Video Facilities (cont'd)

(B) Video Digital Transport Service – Type II (Cont'd)

(3) Term Commitment Plan (TCP)# (Cont'd)

(b) 270 Mbps Service (Cont'd)

(1) Switched Video Access Line (SVAL) (Cont'd)

(a) Unidirectional (Cont'd)

5 Years

Jurisdiction	1-4 Connections Same Location NRC	1-4 Connections Same Location MRC	5 or More Connections Same Location NRC	5 or More Connections Same Location MRC	
California-WC	NA	NA	NA	NA	(D)
Illinois	NA	NA	NA	NA	
Indiana	NA	NA	NA	NA	
Michigan	NA	NA	NA	NA	
N Carolina	NA	NA	NA	NA	
Ohio	NA	NA	NA	NA	(D)
S Carolina	NA	NA	NA	NA	(D)
Wisconsin	NA	NA	NA	NA	

Service availability limited. Refer to # footnote on Page 5-73.

© 2022 Frontier Communications Parent, Inc. All rights reserved

5 SPECIAL ACCESS (Cont'd)

5.7 Rates and Charges (Cont'd)

5.7.4 Video Facilities (cont'd)

(B) Video Digital Transport Service – Type II (Cont'd)

(3) Term Commitment Plan (TCP)# (Cont'd)

(b) 270 Mbps Service (Cont'd)

(1) Switched Video Access Line (SVAL) (Cont'd)

(b) Bi-directional #

	1 Year				
	1-4 Connections Same Location		5 or More Connections Same Location		
Jurisdiction	NRC	MRC	NRC	MRC	
California-WC	NA	NA	NA	NA	(D)
Illinois	NA	NA	NA	NA	
Indiana	NA	NA	NA	NA	
Michigan	NA	NA	NA	NA	
N Carolina	NA	NA	NA	NA	
Ohio	NA	NA	NA	NA	(D)
S Carolina	NA	NA	NA	NA	(D)
Wisconsin	NA	NA	NA	NA	

Service availability limited. Refer to # footnote on Page 5-73.

© 2022 Frontier Communications Parent, Inc. All rights reserved

5 SPECIAL ACCESS (Cont'd)

5.7 Rates and Charges (Cont'd)

5.7.4 Video Facilities (cont'd)

(B) Video Digital Transport Service – Type II (Cont'd)

(3) Term Commitment Plan (TCP)# (Cont'd)

(b) 270 Mbps Service (Cont'd)

(1) Switched Video Access Line (SVAL) (Cont'd)

(b) Bi-directional #(Cont'd)

2 Years

Jurisdiction	1-4 Connections Same Location NRC	1-4 Connections Same Location MRC	5 or More Connections Same Location NRC	5 or More Connections Same Location MRC	
California-WC	NA	NA	NA	NA	(D)
Illinois	NA	NA	NA	NA	
Indiana	NA	NA	NA	NA	
Michigan	NA	NA	NA	NA	
N Carolina	NA	NA	NA	NA	
Ohio	NA	NA	NA	NA	(D)
S Carolina	NA	NA	NA	NA	(D)
Wisconsin	NA	NA	NA	NA	

Service availability limited. Refer to # footnote on Page 5-73.

© 2022 Frontier Communications Parent, Inc. All rights reserved

5 SPECIAL ACCESS (Cont'd)

5.7 Rates and Charges (Cont'd)

5.7.4 Video Facilities (cont'd)

(B) Video Digital Transport Service – Type II (Cont'd)

(3) Term Commitment Plan (TCP)# (Cont'd)

(b) 270 Mbps Service (Cont'd)

(1) Switched Video Access Line (SVAL) (Cont'd)

(b) Bi-directional #(Cont'd)

	3 Years				
	1-4 Connections Same Location		5 or More Connections Same Location		
Jurisdiction	NRC	MRC	NRC	MRC	
California-WC	NA	NA	NA	NA	(D)
Illinois	NA	NA	NA	NA	
Indiana	NA	NA	NA	NA	
Michigan	NA	NA	NA	NA	
N Carolina	NA	NA	NA	NA	
Ohio	NA	NA	NA	NA	(D)
S Carolina	NA	NA	NA	NA	(D)
Wisconsin	NA	NA	NA	NA	

Service availability limited. Refer to # footnote on Page 5-73.

© 2022 Frontier Communications Parent, Inc. All rights reserved

5 SPECIAL ACCESS (Cont'd)

5.7 Rates and Charges (Cont'd)

5.7.4 Video Facilities (cont'd)

(B) Video Digital Transport Service – Type II (Cont'd)

(3) Term Commitment Plan (TCP)# (Cont'd)

(b) 270 Mbps Service (Cont'd)

(1) Switched Video Access Line (SVAL) (Cont'd)

(b) Bi-directional #(Cont'd)

5 Years

Jurisdiction	1-4 Connections Same Location NRC	1-4 Connections Same Location MRC	5 or More Connections Same Location NRC	5 or More Connections Same Location MRC	
California-WC	NA	NA	NA	NA	(D)
Illinois	NA	NA	NA	NA	
Indiana	NA	NA	NA	NA	
Michigan	NA	NA	NA	NA	
N Carolina	NA	NA	NA	NA	
Ohio	NA	NA	NA	NA	(D)
S Carolina	NA	NA	NA	NA	(D)
Wisconsin	NA	NA	NA	NA	

Service availability limited. Refer to # footnote on Page 5-73.

© 2022 Frontier Communications Parent, Inc. All rights reserved

5 SPECIAL ACCESS (Cont'd)

5.7 Rates and Charges (Cont'd)

5.7.4 Video Facilities (cont'd)

(B) Video Digital Transport Service – Type II (Cont'd)

(3) Term Commitment Plan (TCP)# (Cont'd)

(b) 270 Mbps Service (Cont'd)

(2) Switched Video Port

(a) Unidirectional

1 Year

Jurisdiction	1-4 Connections Same Location NRC	1-4 Connections Same Location MRC	5 or More Connections Same Location NRC	5 or More Connections Same Location MRC	
California-WC	NA	NA	NA	NA	(D)
Illinois	NA	NA	NA	NA	
Indiana	NA	NA	NA	NA	
Michigan	NA	NA	NA	NA	
N Carolina	NA	NA	NA	NA	
Ohio	NA	NA	NA	NA	(D)
S Carolina	NA	NA	NA	NA	(D)
Wisconsin	NA	NA	NA	NA	

Service availability limited. Refer to # footnote on Page 5-73.

© 2022 Frontier Communications Parent, Inc. All rights reserved

5 SPECIAL ACCESS (Cont'd)

5.7 Rates and Charges (Cont'd)

5.7.4 Video Facilities (cont'd)

(B) Video Digital Transport Service – Type II (Cont'd)

(3) Term Commitment Plan (TCP)# (Cont'd)

(b) 270 Mbps Service (Cont'd)

(2) Switched Video Port (Cont'd)

(a) Unidirectional (Cont'd)

2 Years

Jurisdiction	1-4 Connections Same Location NRC	1-4 Connections Same Location MRC	5 or More Connections Same Location NRC	5 or More Connections Same Location MRC	
California-WC	NA	NA	NA	NA	(D)
Illinois	NA	NA	NA	NA	
Indiana	NA	NA	NA	NA	
Michigan	NA	NA	NA	NA	
N Carolina	NA	NA	NA	NA	
Ohio	NA	NA	NA	NA	(D)
S Carolina	NA	NA	NA	NA	(D)
Wisconsin	NA	NA	NA	NA	

Service availability limited. Refer to # footnote on Page 5-73.

© 2022 Frontier Communications Parent, Inc. All rights reserved

5 SPECIAL ACCESS (Cont'd)

5.7 Rates and Charges (Cont'd)

5.7.4 Video Facilities (cont'd)

(B) Video Digital Transport Service – Type II (Cont'd)

(3) Term Commitment Plan (TCP)# (Cont'd)

(b) 270 Mbps Service (Cont'd)

(2) Switched Video Port (Cont'd)

(a) Unidirectional (Cont'd)

	3 Years				
	1-4 Connections Same Location		5 or More Connections Same Location		
Jurisdiction	NRC	MRC	NRC	MRC	
California-WC	NA	NA	NA	NA	(D)
Illinois	NA	NA	NA	NA	
Indiana	NA	NA	NA	NA	
Michigan	NA	NA	NA	NA	
N Carolina	NA	NA	NA	NA	
Ohio	NA	NA	NA	NA	(D)
S Carolina	NA	NA	NA	NA	(D)
Wisconsin	NA	NA	NA	NA	

Service availability limited. Refer to # footnote on Page 5-73.

© 2022 Frontier Communications Parent, Inc. All rights reserved

5 SPECIAL ACCESS (Cont'd)

5.7 Rates and Charges (Cont'd)

5.7.4 Video Facilities (cont'd)

(B) Video Digital Transport Service – Type II (Cont'd)

(3) Term Commitment Plan (TCP)# (Cont'd)

(b) 270 Mbps Service (Cont'd)

(2) Switched Video Port (Cont'd)

(a) Unidirectional (Cont'd)

	5 Years				
	1-4 Connections Same Location		5 or More Connections Same Location		
Jurisdiction	NRC	MRC	NRC	MRC	
California-WC	NA	NA	NA	NA	(D)
Illinois	NA	NA	NA	NA	
Indiana	NA	NA	NA	NA	
Michigan	NA	NA	NA	NA	
N Carolina	NA	NA	NA	NA	
Ohio	NA	NA	NA	NA	(D)
S Carolina	NA	NA	NA	NA	(D)
Wisconsin	NA	NA	NA	NA	

Service availability limited. Refer to # footnote on Page 5-73.

© 2022 Frontier Communications Parent, Inc. All rights reserved

5 SPECIAL ACCESS (Cont'd)

5.7 Rates and Charges (Cont'd)

5.7.4 Video Facilities (cont'd)

(B) Video Digital Transport Service – Type II (Cont'd)

(3) Term Commitment Plan (TCP)# (Cont'd)

(b) 270 Mbps Service (Cont'd)

(2) Switched Video Port (Cont'd)

(b) Bi-directional #

	1 Year				
	1-4 Connections Same Location		5 or More Connections Same Location		
Jurisdiction	NRC	MRC	NRC	MRC	
California-WC	NA	NA	NA	NA	
Illinois	NA	NA	NA	NA	
Indiana	NA	NA	NA	NA	
Michigan	NA	NA	NA	NA	
N Carolina	NA	NA	NA	NA	
Ohio	NA	NA	NA	NA	(D)
S Carolina	NA	NA	NA	NA	(D)
Wisconsin	NA	NA	NA	NA	

Service availability limited. Refer to # footnote on Page 5-73.

© 2022 Frontier Communications Parent, Inc. All rights reserved

5 SPECIAL ACCESS (Cont'd)

5.7 Rates and Charges (Cont'd)

5.7.4 Video Facilities (cont'd)

(B) Video Digital Transport Service – Type II (Cont'd)

(3) Term Commitment Plan (TCP)# (Cont'd)

(b) 270 Mbps Service (Cont'd)

(2) Switched Video Port (Cont'd)

(b) Bi-directional #(Cont'd)

2 Years

Jurisdiction	1-4 Connections Same Location NRC	1-4 Connections Same Location MRC	5 or More Connections Same Location NRC	5 or More Connections Same Location MRC	
California-WC	NA	NA	NA	NA	(D)
Illinois	NA	NA	NA	NA	
Indiana	NA	NA	NA	NA	
Michigan	NA	NA	NA	NA	
N Carolina	NA	NA	NA	NA	
Ohio	NA	NA	NA	NA	(D)
S Carolina	NA	NA	NA	NA	(D)
Wisconsin	NA	NA	NA	NA	

Service availability limited. Refer to # footnote on Page 5-73.

© 2022 Frontier Communications Parent, Inc. All rights reserved

5 SPECIAL ACCESS (Cont'd)

5.7 Rates and Charges (Cont'd)

5.7.4 Video Facilities (cont'd)

(B) Video Digital Transport Service – Type II (Cont'd)

(3) Term Commitment Plan (TCP)# (Cont'd)

(b) 270 Mbps Service (Cont'd)

(2) Switched Video Port (Cont'd)

(b) Bi-directional #(Cont'd)

3 Years

Jurisdiction	1-4 Connections Same Location NRC	1-4 Connections Same Location MRC	5 or More Connections Same Location NRC	5 or More Connections Same Location MRC	
California-WC	NA	NA	NA	NA	(D)
Illinois	NA	NA	NA	NA	
Indiana	NA	NA	NA	NA	
Michigan	NA	NA	NA	NA	
N Carolina	NA	NA	NA	NA	
Ohio	NA	NA	NA	NA	(D)
S Carolina	NA	NA	NA	NA	(D)
Wisconsin	NA	NA	NA	NA	

Service availability limited. Refer to # footnote on Page 5-73.

© 2022 Frontier Communications Parent, Inc. All rights reserved

5 SPECIAL ACCESS (Cont'd)

5.7 Rates and Charges (Cont'd)

5.7.4 Video Facilities (cont'd)

(B) Video Digital Transport Service – Type II (Cont'd)

(3) Term Commitment Plan (TCP)# (Cont'd)

(b) 270 Mbps Service (Cont'd)

(2) Switched Video Port (Cont'd)

(b) Bi-directional #(Cont'd)

5 Years

Jurisdiction	1-4 Connections Same Location NRC	1-4 Connections Same Location MRC	5 or More Connections Same Location NRC	5 or More Connections Same Location MRC	
California-WC	NA	NA	NA	NA	(D)
Illinois	NA	NA	NA	NA	
Indiana	NA	NA	NA	NA	
Michigan	NA	NA	NA	NA	
N Carolina	NA	NA	NA	NA	
Ohio	NA	NA	NA	NA	(D)
S Carolina	NA	NA	NA	NA	(D)
Wisconsin	NA	NA	NA	NA	

Service availability limited. Refer to # footnote on Page 5-73.

© 2022 Frontier Communications Parent, Inc. All rights reserved

5 SPECIAL ACCESS (Cont'd)

5.7 Rates and Charges (Cont'd)

5.7.4 Video Facilities (cont'd)

(B) Video Digital Transport Service – Type II (Cont'd)

(3) Term Commitment Plan (TCP)# (Cont'd)

(b) 270 Mbps Service (Cont'd)

(3) Dedicated Video Line (DVL)

	1 Year				
	Unidirectional		Bi-directional #		
	NRC	MRC	NRC	MRC	
Jurisdiction					
California-WC	NA	NA	NA	NA	(D)
Illinois	NA	NA	NA	NA	
Indiana	NA	NA	NA	NA	
Michigan	NA	NA	NA	NA	
N Carolina	NA	NA	NA	NA	
Ohio	NA	NA	NA	NA	(D)
S Carolina	NA	NA	NA	NA	(D)
Wisconsin	NA	NA	NA	NA	

Service availability limited. Refer to # footnote on Page 5-73.

© 2022 Frontier Communications Parent, Inc. All rights reserved

5 SPECIAL ACCESS (Cont'd)

5.7 Rates and Charges (Cont'd)

5.7.4 Video Facilities (cont'd)

(B) Video Digital Transport Service – Type II (Cont'd)

(3) Term Commitment Plan (TCP)# (Cont'd)

(b) 270 Mbps Service (Cont'd)

(3) Dedicated Video Line (DVL) (Cont'd)

	2 Years				
	Unidirectional		Bi-directional #		
	NRC	MRC	NRC	MRC	
Jurisdiction					
California-WC	NA	NA	NA	NA	(D)
Illinois	NA	NA	NA	NA	
Indiana	NA	NA	NA	NA	
Michigan	NA	NA	NA	NA	
N Carolina	NA	NA	NA	NA	
Ohio	NA	NA	NA	NA	(D)
S Carolina	NA	NA	NA	NA	(D)
Wisconsin	NA	NA	NA	NA	

Service availability limited. Refer to # footnote on Page 5-73.

© 2022 Frontier Communications Parent, Inc. All rights reserved

5 SPECIAL ACCESS (Cont'd)

5.7 Rates and Charges (Cont'd)

5.7.4 Video Facilities (cont'd)

(B) Video Digital Transport Service – Type II (Cont'd)

(3) Term Commitment Plan (TCP)# (Cont'd)

(b) 270 Mbps Service (Cont'd)

(3) Dedicated Video Line (DVL) (Cont'd)

	3 Years				
	Unidirectional		Bi-directional #		
	NRC	MRC	NRC	MRC	
Jurisdiction					
California-WC	NA	NA	NA	NA	(D)
Illinois	NA	NA	NA	NA	
Indiana	NA	NA	NA	NA	
Michigan	NA	NA	NA	NA	
N Carolina	NA	NA	NA	NA	
Ohio	NA	NA	NA	NA	(D)
S Carolina	NA	NA	NA	NA	(D)
Wisconsin	NA	NA	NA	NA	

Service availability limited. Refer to # footnote on Page 5-73.

© 2022 Frontier Communications Parent, Inc. All rights reserved

5 SPECIAL ACCESS (Cont'd)

5.7 Rates and Charges (Cont'd)

5.7.4 Video Facilities (cont'd)

(B) Video Digital Transport Service – Type II (Cont'd)

(3) Term Commitment Plan (TCP)# (Cont'd)

(b) 270 Mbps Service (Cont'd)

(3) Dedicated Video Line (DVL) (Cont'd)

	5 Years				
	Unidirectional		Bi-directional #		
	NRC	MRC	NRC	MRC	
Jurisdiction					
California-WC	NA	NA	NA	NA	(D)
Illinois	NA	NA	NA	NA	
Indiana	NA	NA	NA	NA	
Michigan	NA	NA	NA	NA	
N Carolina	NA	NA	NA	NA	
Ohio	NA	NA	NA	NA	(D)
S Carolina	NA	NA	NA	NA	(D)
Wisconsin	NA	NA	NA	NA	

Service availability limited. Refer to # footnote on Page 5-73.

© 2022 Frontier Communications Parent, Inc. All rights reserved

5 SPECIAL ACCESS (Cont'd)

5.7 Rates and Charges (Cont'd)

5.7.4 Video Facilities (cont'd)

(B) Video Digital Transport Service – Type II (Cont'd)

(3) Term Commitment Plan (TCP)# (Cont'd)

(b) 270 Mbps Service (Cont'd)

(4) Transport

	1 Year		2 Years		
Jurisdiction	Per Mile	Fixed Per 20 Miles	Per Mile	Fixed Per 20 Miles	
California-WC	NA	NA	NA	NA	
Illinois	NA	NA	NA	NA	
Indiana	NA	NA	NA	NA	
Michigan	NA	NA	NA	NA	
N Carolina	NA	NA	NA	NA	
Ohio	NA	NA	NA	NA	
					(D)
S Carolina	NA	NA	NA	NA	
					(D)
Wisconsin	NA	NA	NA	NA	

Service availability limited. Refer to # footnote on Page 5-73.

© 2022 Frontier Communications Parent, Inc. All rights reserved

5 SPECIAL ACCESS (Cont'd)

5.7 Rates and Charges (Cont'd)

5.7.4 Video Facilities (cont'd)

(B) Video Digital Transport Service – Type II (Cont'd)

(3) Term Commitment Plan (TCP)# (Cont'd)

(b) 270 Mbps Service (Cont'd)

(4) Transport (Cont'd)

	3 Years		5 Years		
	Per Mile	Fixed Per 20 Miles	Per Mile	Fixed Per 20 Miles	
Jurisdiction					
California-WC	NA	NA	NA	NA	(D)
Illinois	NA	NA	NA	NA	
Indiana	NA	NA	NA	NA	
Michigan	NA	NA	NA	NA	
N Carolina	NA	NA	NA	NA	
Ohio	NA	NA	NA	NA	(D)
S Carolina	NA	NA	NA	NA	(D)
Wisconsin	NA	NA	NA	NA	

Service availability limited. Refer to # footnote on Page 5-73.

© 2022 Frontier Communications Parent, Inc. All rights reserved

5 SPECIAL ACCESS (Cont'd)

5.7 Rates and Charges (Cont'd)

5.7.4 Video Facilities (cont'd)

(B) Video Digital Transport Service – Type II (Cont'd)

(3) Term Commitment Plan (TCP)# (Cont'd)

(c) TV1-Analog

(1) Switched Video Access Line (SVAL)

(a) Unidirectional

	First SVAL#		Additional SVAL, Same location @		
	NRC	MRC	NRC	MRC	
		1 Year			
Indiana					
Competitive	312.50	302.00	0.00	292.00	(D)
N Carolina					
Competitive	312.50	302.00	0.00	292.00	(D)
Ohio					
Competitive	312.50	302.00	0.00	292.00	(D)
					(D)
Wisconsin					
Competitive	312.50	302.00	0.00	292.00	

Service availability limited. Refer to # footnote on Page 5-73.

Associated with a First Switched Video Port
@ Associated with an Additional Switched Video Port

© 2022 Frontier Communications Parent, Inc. All rights reserved

5 SPECIAL ACCESS (Cont'd)

5.7 Rates and Charges (Cont'd)

5.7.4 Video Facilities (cont'd)

(B) Video Digital Transport Service – Type II (Cont'd)

(3) Term Commitment Plan (TCP)# (Cont'd)

(c) TV1-Analog

(1) Switched Video Access Line (SVAL)

(a) Unidirectional

	First SVAL#		Additional SVAL, Same location @		
	NRC	MRC	NRC	MRC	
		2 Year			
Illinois	0.00	292.00	0.00	282.00	
Indiana	0.00	292.00	0.00	282.00	
N Carolina	0.00	292.00	0.00	282.00	
Ohio	0.00	292.00	0.00	282.00	(D)
					(D)
Wisconsin	0.00	292.00	0.00	282.00	

© 2022 Frontier Communications Parent, Inc. All rights reserved

5 SPECIAL ACCESS (Cont'd)

5.7 Rates and Charges (Cont'd)

5.7.4 Video Facilities (cont'd)

(B) Video Digital Transport Service – Type II (Cont'd)

(3) Term Commitment Plan (TCP)# (Cont'd)

(c) TV1-Analog

(1) Switched Video Access Line (SVAL)

(a) Unidirectional

	First SVAL#		Additional SVAL, Same location @		
	NRC	MRC	NRC	MRC	
		3 Year			
Indiana	0.00	287.00	0.00	277.00	
N Carolina	0.00	287.00	0.00	277.00	
Ohio	0.00	287.00	0.00	277.00	(D
Wisconsin	0.00	287.00	0.00	277.00	(D))

© 2022 Frontier Communications Parent, Inc. All rights reserved

5 SPECIAL ACCESS (Cont'd)

5.7 Rates and Charges (Cont'd)

5.7.4 Video Facilities (cont'd)

(B) Video Digital Transport Service – Type II (Cont'd)

(3) Term Commitment Plan (TCP)# (Cont'd)

(c) TV1-Analog

(1) Switched Video Access Line (SVAL)

(a) Unidirectional

	First SVAL#		Additional SVAL, Same location @		
	NRC	MRC	NRC	MRC	
		5 Year			
Indiana	0.00	282.00	0.00	272.00	
N Carolina	0.00	282.00	0.00	272.00	
Ohio	0.00	282.00	0.00	272.00	(D)
					(D)
Wisconsin	0.00	282.00	0.00	272.00	

Service availability limited. Refer to # footnote on Page 5-73.

Associated with a First Switched Video Port
@ Associated with an Additional Switched Video Port

© 2022 Frontier Communications Parent, Inc. All rights reserved

5 SPECIAL ACCESS (Cont'd)

5.7 Rates and Charges (Cont'd)

5.7.4 Video Facilities (cont'd)

(B) Video Digital Transport Service – Type II (Cont'd)

(3) Term Commitment Plan (TCP)# (Cont'd)

(c) TV1-Analog (Cont'd)

(1) Switched Video Access Line (SVAL) (Cont'd)

(b) Bi-directional

	First SVAL#		Additional SVAL, Same location @		
	NRC	MRC	NRC	MRC	
		1 Year			
Indiana					
Competitive	625.00	508.00	0.00	498.00	
N Carolina					
Competitive	625.00	508.00	0.00	498.00	
Ohio					
Competitive	625.00	508.00	0.00	498.00	
					(D)
					(D)
					(D)
					(D)
Wisconsin					
Competitive	625.00	508.00	0.00	498.00	

Service availability limited. Refer to # footnote on Page 5-73.

Associated with a First Switched Video Port
@ Associated with an Additional Switched Video Port

© 2022 Frontier Communications Parent, Inc. All rights reserved

5 SPECIAL ACCESS (Cont'd)

5.7 Rates and Charges (Cont'd)

5.7.4 Video Facilities (cont'd)

(B) Video Digital Transport Service – Type II (Cont'd)

(3) Term Commitment Plan (TCP)# (Cont'd)

(1) Switched Video Access Line (SVAL) (Cont'd)

(b) Bi-directional

	First SVAL#		Additional SVAL, Same location @		
	NRC	MRC	NRC	MRC	
		2 Year			
Indiana	0.00	498.00	0.00	488.00	
N Carolina	0.00	498.00	0.00	488.00	
Ohio	0.00	498.00	0.00	488.00	
					(D)
					(D)
Wisconsin	0.00	498.00	0.00	488.00	

Service availability limited. Refer to # footnote on Page 5-73.

Associated with a First Switched Video Port
@ Associated with an Additional Switched Video Port

© 2022 Frontier Communications Parent, Inc. All rights reserved

5 SPECIAL ACCESS (Cont'd)

5.7 Rates and Charges (Cont'd)

5.7.4 Video Facilities (cont'd)

(B) Video Digital Transport Service – Type II (Cont'd)

(3) Term Commitment Plan (TCP)# (Cont'd)

(c) TV1-Analog (Cont'd)

(1) Switched Video Access Line (SVAL) (Cont'd)

(b) Bi-directional

	First SVAL#		Additional SVAL, Same location @		
	NRC	MRC	NRC	MRC	
		3 Year			
Indiana	0.00	493.00	0.00	483.00	
N Carolina	0.00	493.00	0.00	483.00	
Ohio	0.00	493.00	0.00	483.00	
					(D)
					(D)
Wisconsin	0.00	493.00	0.00	483.00	

Service availability limited. Refer to # footnote on Page 5-73.

Associated with a First Switched Video Port
@ Associated with an Additional Switched Video Port

© 2022 Frontier Communications Parent, Inc. All rights reserved

5 SPECIAL ACCESS (Cont'd)

5.7 Rates and Charges (Cont'd)

5.7.4 Video Facilities (cont'd)

(B) Video Digital Transport Service – Type II (Cont'd)

(3) Term Commitment Plan (TCP)# (Cont'd)

(c) TV1-Analog (Cont'd)

(1) Switched Video Access Line (SVAL) (Cont'd)

(b) Bi-directional

	First SVAL#		Additional SVAL, Same location @		
	NRC	MRC	NRC	MRC	
		5 Year			
Indiana	0.00	488.00	0.00	478.00	
N Carolina	0.00	488.00	0.00	478.00	
Ohio	0.00	488.00	0.00	478.00	
					(D)
					(D)
Wisconsin	0.00	488.00	0.00	478.00	

Service availability limited. Refer to # footnote on Page 5-73.

Associated with a First Switched Video Port
@ Associated with an Additional Switched Video Port

© 2022 Frontier Communications Parent, Inc. All rights reserved

5 SPECIAL ACCESS (Cont'd)

5.7 Rates and Charges (Cont'd)

5.7.4 Video Facilities (cont'd)

(B) Video Digital Transport Service – Type II (Cont'd)

(3) Term Commitment Plan (TCP) (Cont'd)

(c) TV1-Analog (Cont'd)

(2) Switched Video Port

(a) Unidirectional

	First Port#		Additional Port@		
	NRC	MRC	NRC	MRC	
		1 Year			
Indiana	250.00	300.00	0.00	300.00	
N Carolina	250.00	300.00	0.00	300.00	
Ohio	250.00	300.00	0.00	300.00	
					(D)
					(D)
Wisconsin	250.00	300.00	0.00	300.00	

Associated with a First Switched Video Port
@ Associated with an Additional Switched Video Port

© 2022 Frontier Communications Parent, Inc. All rights reserved

5 SPECIAL ACCESS (Cont'd)

5.7 Rates and Charges (Cont'd)

5.7.4 Video Facilities (cont'd)

(B) Video Digital Transport Service – Type II (Cont'd)

(3) Term Commitment Plan (TCP) (Cont'd)

(c) TV1-Analog (Cont'd)

(2) Switched Video Port

(a) Unidirectional

	First Port#		Additional Port@		
	NRC	MRC	NRC	MRC	
		2 Year			
Indiana	0.00	290.00	0.00	278.00	
N Carolina	0.00	290.00	0.00	278.00	
Ohio	0.00	290.00	0.00	278.00	
					(D)
					(D)
Wisconsin	0.00	290.00	0.00	278.00	

Associated with a First Switched Video Port
@ Associated with an Additional Switched Video Port

© 2022 Frontier Communications Parent, Inc. All rights reserved

5 SPECIAL ACCESS (Cont'd)

5.7 Rates and Charges (Cont'd)

5.7.4 Video Facilities (cont'd)

(B) Video Digital Transport Service – Type II (Cont'd)

(3) Term Commitment Plan (TCP) (Cont'd)

(c) TV1-Analog (Cont'd)

(2) Switched Video Port

(a) Unidirectional

	First Port#		Additional Port@		
	NRC	MRC	NRC	MRC	
		3 Year			
Indiana	0.00	285.00	0.00	270.00	
N Carolina	0.00	285.00	0.00	270.00	
Ohio	0.00	285.00	0.00	270.00	(D)
					(D)
Wisconsin	0.00	285.00	0.00	270.00	

Associated with a First Switched Video Port
@ Associated with an Additional Switched Video Port

© 2022 Frontier Communications Parent, Inc. All rights reserved

5 SPECIAL ACCESS (Cont'd)

5.7 Rates and Charges (Cont'd)

5.7.4 Video Facilities (cont'd)

(B) Video Digital Transport Service – Type II (Cont'd)

(3) Term Commitment Plan (TCP) (Cont'd)

(c) TV1-Analog (Cont'd)

(2) Switched Video Port

(a) Unidirectional

	First Port#		Additional Port@		
	NRC	MRC	NRC	MRC	
		5 Year			
Indiana	0.00	280.00	0.00	265.00	
N Carolina	0.00	280.00	0.00	265.00	
Ohio	0.00	280.00	0.00	265.00	
					(D)
					(D)
Wisconsin	0.00	280.00	0.00	265.00	

Associated with a First Switched Video Port
@ Associated with an Additional Switched Video Port

© 2022 Frontier Communications Parent, Inc. All rights reserved

5 SPECIAL ACCESS (Cont'd)

5.7 Rates and Charges (Cont'd)

5.7.4 Video Facilities (cont'd)

(B) Video Digital Transport Service – Type II (Cont'd)

(3) Term Commitment Plan (TCP) (Cont'd)

(c) TV1-Analog (Cont'd)

(2) Switched Video Port (Cont'd)

(b) Bi-directional

	First Port#		Additional Port@		
	NRC	MRC	NRC	MRC	
		1 Year			
Indiana	500.00	577.00	0.00	567.00	
N Carolina	500.00	577.00	0.00	567.00	
Ohio	500.00	577.00	0.00	567.00	
					(D)
					(D)
Wisconsin	500.00	577.00	0.00	567.00	

© 2022 Frontier Communications Parent, Inc. All rights reserved

5 SPECIAL ACCESS (Cont'd)

5.7 Rates and Charges (Cont'd)

5.7.4 Video Facilities (cont'd)

(B) Video Digital Transport Service – Type II (Cont'd)

(3) Term Commitment Plan (TCP) (Cont'd)

(c) TV1-Analog (Cont'd)

(2) Switched Video Port (Cont'd)

(b) Bi-directional

	First Port#		Additional Port@		
	NRC	MRC	NRC	MRC	
		2 Year			
Indiana	0.00	567.00	0.00	557.00	
N Carolina	0.00	567.00	0.00	557.00	
Ohio	0.00	567.00	0.00	557.00	
					(D)
					(D)
Wisconsin	0.00	567.00	0.00	557.00	

Associated with a First Switched Video Port
@ Associated with an Additional Switched Video Port

© 2022 Frontier Communications Parent, Inc. All rights reserved

5 SPECIAL ACCESS (Cont'd)

5.7 Rates and Charges (Cont'd)

5.7.4 Video Facilities (cont'd)

(B) Video Digital Transport Service – Type II (Cont'd)

(3) Term Commitment Plan (TCP) (Cont'd)

(c) TV1-Analog (Cont'd)

(2) Switched Video Port (Cont'd)

(b) Bi-directional

	First Port#		Additional Port@		
	NRC	MRC	NRC	MRC	
		3 Year			
Indiana	0.00	560.00	0.00	552.00	
N Carolina	0.00	560.00	0.00	552.00	
Ohio	0.00	560.00	0.00	552.00	(D)
					(D)
Wisconsin	0.00	560.00	0.00	552.00	

Associated with a First Switched Video Port
@ Associated with an Additional Switched Video Port

© 2022 Frontier Communications Parent, Inc. All rights reserved

5 SPECIAL ACCESS (Cont'd)

5.7 Rates and Charges (Cont'd)

5.7.4 Video Facilities (cont'd)

(B) Video Digital Transport Service – Type II (Cont'd)

(3) Term Commitment Plan (TCP) (Cont'd)

(c) TV1-Analog (Cont'd)

(2) Switched Video Port (Cont'd)

(b) Bi-directional

	First Port#		Additional Port@		
	NRC	MRC	NRC	MRC	
		5 Year			
Indiana	0.00	555.00	0.00	547.00	
N Carolina	0.00	555.00	0.00	547.00	
Ohio	0.00	555.00	0.00	547.00	
					(D)
					(D)
Wisconsin	0.00	555.00	0.00	547.00	

Associated with a First Switched Video Port
@ Associated with an Additional Switched Video Port

© 2022 Frontier Communications Parent, Inc. All rights reserved

5 SPECIAL ACCESS (Cont'd)

5.7 Rates and Charges (Cont'd)

5.7.4 Video Facilities (cont'd)

(B) Video Digital Transport Service – Type II (Cont'd)

(3) Term Commitment Plan (TCP)# (Cont'd)

(c) TV1-Analog (Cont'd)

(3) Dedicated Video Line (DVL) – Unidirectional

	First#		Additional Same Location@		
	NRC	MRC	NRC	MRC	
		1 Year			
Indiana					
Competitive	625.00	505.00	0.00	500.00	
N Carolina					
Competitive	625.00	505.00	0.00	500.00	
Ohio					
Competitive	625.00	505.00	0.00	500.00	
					(D)
					(D)
					(D)
					(D)
Wisconsin					
Competitive	625.00	505.00	0.00	500.00	

Service availability limited. Refer to # footnote on Page 5-73.

Associated with a First Switched Video Port
@ Associated with an Additional Switched Video Port

© 2022 Frontier Communications Parent, Inc. All rights reserved

5 SPECIAL ACCESS (Cont'd)

5.7 Rates and Charges (Cont'd)

5.7.4 Video Facilities (cont'd)

(B) Video Digital Transport Service – Type II (Cont'd)

(3) Term Commitment Plan (TCP)# (Cont'd)

(c) TV1-Analog (Cont'd)

(3) Dedicated Video Line (DVL) – Unidirectional

	First#		Additional Same Location@		
	NRC	MRC	NRC	MRC	
		2 Year			
Indiana	0.00	495.00	0.00	490.00	
N Carolina	0.00	495.00	0.00	490.00	
Ohio	0.00	495.00	0.00	490.00	(D)
					(D)
Wisconsin	0.00	495.00	0.00	490.00	

Service availability limited. Refer to # footnote on Page 5-73.

Associated with a First Switched Video Port
@ Associated with an Additional Switched Video Port

© 2022 Frontier Communications Parent, Inc. All rights reserved

5 SPECIAL ACCESS (Cont'd)

5.7 Rates and Charges (Cont'd)

5.7.4 Video Facilities (cont'd)

(B) Video Digital Transport Service – Type II (Cont'd)

(3) Term Commitment Plan (TCP)# (Cont'd)

(c) TV1-Analog (Cont'd)

(3) Dedicated Video Line (DVL) – Unidirectional

	First#		Additional Same Location@		
	NRC (VA7UE)	MRC	NRC (VA7UF)	MRC	
		3 Year			
Indiana	0.00	490.00	0.00	485.00	
N Carolina	0.00	490.00	0.00	485.00	
Ohio	0.00	490.00	0.00	485.00	
					(D)
					(D)
Wisconsin	0.00	490.00	0.00	485.00	

Service availability limited. Refer to # footnote on Page 5-73.

Associated with a First Switched Video Port
@ Associated with an Additional Switched Video Port

.

© 2022 Frontier Communications Parent, Inc. All rights reserved

5 SPECIAL ACCESS (Cont'd)

5.7 Rates and Charges (Cont'd)

5.7.4 Video Facilities (cont'd)

(B) Video Digital Transport Service – Type II (Cont'd)

(3) Term Commitment Plan (TCP)# (Cont'd)

(c) TV1-Analog (Cont'd)

(3) Dedicated Video Line (DVL) – Unidirectional

	First#		Additional Same Location@		
	NRC	MRC	NRC	MRC	
		5 Year			
Indiana	0.00	485.00	0.00	480.00	
N Carolina	0.00	485.00	0.00	480.00	
Ohio	0.00	485.00	0.00	480.00	(D)
					(D)
Wisconsin	0.00	485.00	0.00	480.00	

Service availability limited. Refer to # footnote on Page 5-73.

Associated with a First Switched Video Port
@ Associated with an Additional Switched Video Port

© 2022 Frontier Communications Parent, Inc. All rights reserved

5 SPECIAL ACCESS (Cont'd)

5.7 Rates and Charges (Cont'd)

5.7.4 Video Facilities (cont'd)

(B) Video Digital Transport Service – Type II (Cont'd)

(3) Term Commitment Plan (TCP) (Cont'd)

(c) TV1-Analog (Cont'd)

(4) Transport

	Per Mile (1YS4S)	Fixed Per 20 Miles (C6H4X)	
	1 Year		
Indiana	16.75	47.75	
North Carolina	16.75	47.75	
Ohio	16.75	47.75	(D)
			(D)
Wisconsin	16.75	47.75	

© 2022 Frontier Communications Parent, Inc. All rights reserved

5 SPECIAL ACCESS (Cont'd)

5.7 Rates and Charges (Cont'd)

5.7.4 Video Facilities (cont'd)

(B) Video Digital Transport Service – Type II (Cont'd)

(3) Term Commitment Plan (TCP) (Cont'd)

(c) TV1-Analog (Cont'd)

(4) Transport

	Per Mile	Fixed Per 20 Miles	
	2 Year		
Indiana	16.25	45.75	
North Carolina	16.25	45.75	
Ohio	16.25	45.75	(D)
			(D)
Wisconsin	16.25	45.75	

© 2022 Frontier Communications Parent, Inc. All rights reserved

5 SPECIAL ACCESS (Cont'd)

5.7 Rates and Charges (Cont'd)

5.7.4 Video Facilities (cont'd)

(B) Video Digital Transport Service – Type II (Cont'd)

(3) Term Commitment Plan (TCP) (Cont'd)

(c) TV1-Analog (Cont'd)

(4) Transport

	Per Mile	Fixed Per 20 Miles	
	3 Year		
Indiana	15.75	43.75	
North Carolina	15.75	43.75	
Ohio	15.75	43.75	(D)
			(D)
Wisconsin	15.75	43.75	

© 2022 Frontier Communications Parent, Inc. All rights reserved

5 SPECIAL ACCESS (Cont'd)

5.7 Rates and Charges (Cont'd)

5.7.4 Video Facilities (cont'd)

(B) Video Digital Transport Service – Type II (Cont'd)

(3) Term Commitment Plan (TCP) (Cont'd)

(c) TV1-Analog (Cont'd)

(4) Transport

	Per Mile	Fixed Per 20 Miles	
	5 Year		
Indiana	15.25	41.75	
North Carolina	15.25	41.75	
Ohio	15.25	41.75	(D)
			(D)
Wisconsin	15.25	41.75	

© 2022 Frontier Communications Parent, Inc. All rights reserved

5 SPECIAL ACCESS (Cont'd)

5.7 Rates and Charges (Cont'd)

5.7.4 Video Facilities (cont'd)

(B) Video Digital Transport Service – Type II (Cont'd)

(4) Short Duration Offerings - Daily Rates - 270 Mbps

(a) 270 Mbps

(1) Switched Video Access Line (SVAL)

	Unidirectional		Bi-directional #		
	NRC	Daily	NRC	Daily	
Jurisdiction					
California-WC	NA	NA	NA	NA	(D)
Illinois	NA	NA	NA	NA	
Indiana	NA	NA	NA	NA	
Michigan	NA	NA	NA	NA	
N Carolina	NA	NA	NA	NA	
Ohio	NA	NA	NA	NA	(D)
S Carolina	NA	NA	NA	NA	(D)
Wisconsin	NA	NA	NA	NA	

Service availability limited. Refer to # footnote on Page 5-17.

© 2022 Frontier Communications Parent, Inc. All rights reserved

5 SPECIAL ACCESS (Cont'd)

5.7 Rates and Charges (Cont'd)

5.7.4 Video Facilities (cont'd)

(B) Video Digital Transport Service – Type II (Cont'd)

(a) 270 Mbps (Cont'd)

(2) Switched Video Port

	Unidirectional		Bi-directional #		
	NRC	Daily	NRC	Daily	
Jurisdiction					
California-WC	NA	NA	NA	NA	(D)
Illinois	NA	NA	NA	NA	
Indiana	NA	NA	NA	NA	
Michigan	NA	NA	NA	NA	
N Carolina	NA	NA	NA	NA	
Ohio	NA	NA	NA	NA	(D)
S Carolina	NA	NA	NA	NA	(D)
Wisconsin	NA	NA	NA	NA	

Service availability limited. Refer to # footnote on Page 5-17.

© 2022 Frontier Communications Parent, Inc. All rights reserved

5 SPECIAL ACCESS (Cont'd)

5.7 Rates and Charges (Cont'd)

5.7.4 Video Facilities (cont'd)

(B) Video Digital Transport Service – Type II (Cont'd)

(4) Short Duration Offerings - Daily Rates (Cont'd)

(a) 270 Mbps (Cont'd)

(3) Dedicated Video Line (DVL)

	Unidirectional		Bi-directional #		
	NRC	Daily	NRC	Daily	
Jurisdiction					
California-WC	NA	NA	NA	NA	(D)
Illinois	NA	NA	NA	NA	
Indiana	NA	NA	NA	NA	
Michigan	NA	NA	NA	NA	
N Carolina	NA	NA	NA	NA	
Ohio	NA	NA	NA	NA	(D)
S Carolina	NA	NA	NA	NA	(D)
Wisconsin	NA	NA	NA	NA	

Service availability limited. Refer to # footnote on Page 5-17.

© 2022 Frontier Communications Parent, Inc. All rights reserved

5 SPECIAL ACCESS (Cont'd)

5.7 Rates and Charges (Cont'd)

5.7.4 Video Facilities (cont'd)

(B) Video Digital Transport Service – Type II (Cont'd)

(4) Short Duration Offerings – Daily Rates (Cont'd)

(a) 270 Mbps (Cont'd)

(4) Transport for Daily Video Usage

Jurisdiction	Per Mile, Daily	Fixed Per 20 Miles, Daily	
California-WC	NA	NA	(D)
Illinois	NA	NA	
Indiana	NA	NA	
Michigan	NA	NA	
N Carolina	NA	NA	
Ohio	NA	NA	(D)
S Carolina	NA	NA	(D)
Wisconsin	NA	NA	

© 2022 Frontier Communications Parent, Inc. All rights reserved

5 SPECIAL ACCESS (Cont'd)

5.7 Rates and Charges (Cont'd)

5.7.4 Video Facilities (cont'd)

(B) Video Digital Transport Service – Type II (Cont'd)

(4) Short Duration Offerings - Daily Rates (Cont'd)

(b) TV1-Analog

(1) Switched Video Access Line (SVAL)

	First				
	Unidirectional		Bi-directional		
	NRC	Daily	NRC	Daily	
Indiana					
Competitive	625.00	124.00	781.25	207.00	(D)
N Carolina					
Competitive	625.00	124.00	781.25	207.00	(D)
Ohio					
Competitive	625.00	124.00	781.25	207.00	(D)
Wisconsin					
Competitive	625.00	124.00	781.25	207.00	(D)

© 2022 Frontier Communications Parent, Inc. All rights reserved

5 SPECIAL ACCESS (Cont'd)

5.7 Rates and Charges (Cont'd)

5.7.4 Video Facilities (cont'd)

(B) Video Digital Transport Service – Type II (Cont'd)

(4) Short Duration Offerings - Daily Rates (Cont'd)

(b) TV1-Analog

(1) Switched Video Access Line (SVAL)

Additional, Same Location

	Undirectional		Bi-directional		
	NRC	Daily	NRC	Daily	
Indiana					
Competitive	250.00	124.00	468.75	207.00	(D)
N Carolina					
Competitive	250.00	124.00	468.75	207.00	(D)
Ohio					
Competitive	250.00	124.00	468.75	207.00	(D)
Wisconsin					
Competitive	250.00	124.00	468.75	207.00	(D)

© 2022 Frontier Communications Parent, Inc. All rights reserved

5 SPECIAL ACCESS (Cont'd)

5.7 Rates and Charges (Cont'd)

5.7.4 Video Facilities (cont'd)

(B) Video Digital Transport Service – Type II (Cont'd)

(4) Short Duration Offerings - Daily Rates (Cont'd)

(b) TV1-Analog (Cont'd)

(2) Switched Video Port

	First				
	Unidirectional		Bi-directional		
	NRC	Daily	NRC	Daily	
Indiana	500.00	119.00	625.00	231.00	
N Carolina	500.00	119.00	625.00	231.00	
Ohio	500.00	119.00	625.00	231.00	(D)
					(D)
Wisconsin	500.00	119.00	625.00	231.00	

© 2022 Frontier Communications Parent, Inc. All rights reserved

5 SPECIAL ACCESS (Cont'd)

5.7 Rates and Charges (Cont'd)

5.7.4 Video Facilities (cont'd)

(B) Video Digital Transport Service – Type II (Cont'd)

(4) Short Duration Offerings - Daily Rates (Cont'd)

(b) TV1-Analog (Cont'd)

(2) Switched Video Port

	Additional				
	Unidirectional		Bi-directional		
	NRC	Daily	NRC	Daily	
Indiana	200.00	119.00	375.00	231.00	
N Carolina	200.00	119.00	375.00	231.00	
Ohio	200.00	119.00	375.00	231.00	(D)
					(D)
Wisconsin	200.00	119.00	375.00	231.00	

© 2022 Frontier Communications Parent, Inc. All rights reserved

5 SPECIAL ACCESS (Cont'd)

5.7 Rates and Charges (Cont'd)

5.7.4 Video Facilities (cont'd)

(B) Video Digital Transport Service – Type II (Cont'd)

(4) Short Duration Offerings - Daily Rates (Cont'd)

(b) TV1-Analog (Cont'd)

(3) Dedicated Video Line – Unidirectional

	First		Additional, Same Location		
	NRC	Daily	NRC	Daily	
Indiana					
Competitive	2,000.00	250.00	625.00	250.00	(D)
N Carolina					
Competitive	2,000.00	250.00	625.00	250.00	(D)
Ohio					
Competitive	2,000.00	250.00	625.00	250.00	(D)
					(D)
Wisconsin					
Competitive	2,000.00	250.00	625.00	250.00	

© 2022 Frontier Communications Parent, Inc. All rights reserved

5 SPECIAL ACCESS (Cont'd)

5.7 Rates and Charges (Cont'd)

5.7.4 Video Facilities (cont'd)

(B) Video Digital Transport Service – Type II (Cont'd)

(4) Short Duration Offerings - Daily Rates (Cont'd)

(b) TV1-Analog (Cont'd)

(4) Transport for Daily Video Usage

	Per Mile, Daily	Fixed Per 20 Miles, Daily	
Indiana	17.25	49.75	
North Carolina	17.25	49.75	
Ohio	17.25	49.75	
			(D)
			(D)
Wisconsin	17.25	49.75	

© 2022 Frontier Communications Parent, Inc. All rights reserved

5. SPECIAL ACCESS (Cont'd)

5.7 Rates and Charges (Cont'd)

5.7.5 Digital Data Service Facilities
(2.4, 4.8, 9.6, 19.2, 56, 64 Kbps)

(A) Standard Arrangements

	Special Access Line (Secondary CDL) Competitive		
	All Speeds Nonrecurring Charge	2.4, 4.8,9.6, 19.2, 56, 64Kbps Monthly Rate	
Jurisdiction			
California-WC	$4,922.38	$4,707.60	(C)
Illinois	4,922.38	1,323.09	
Indiana	4,922.38	1,814.56	
Michigan	4,922.38	2,172.74	
N Carolina	4,922.38	2,123.31	
Ohio	4,922.38	1,814.56	
S Carolina	4,922.38	2,277.40	
Wisconsin	4,922.38	1,680.75	(C)

© 2024 Frontier Communications Parent, Inc. All rights reserved

5. SPECIAL ACCESS (Cont'd)

5.7 Rates and Charges (Cont'd)

5.7.5 Reserved (M)

© 2022 Frontier Communications Parent, Inc. All rights reserved

5. SPECIAL ACCESS (Cont'd)

5.7 Rates and Charges (Cont'd)

5.7.5 Digital Data Service Facilities
(2.4, 4.8, 9.6, 19.2, 56, 64 Kbps)

(A) Standard Arrangements

Jurisdiction	Special Transport All Speeds (Per Airline Mile) Monthly Rate	Special Access Line (IC CDL) All Speeds Nonrecurring Charge	Special Access Line (IC CDL) 2.4, 4.8,9.6, 19.2, 56, 64 Kbps Monthly Rate	
California-WC	$264.78	$3,937.84	$4,707.60	(C)
Illinois	55.89	3,937.84	1,254.62	
Indiana	101.10	3,937.84	1,814.56	
Michigan	119.29	3,937.84	2,172.74	
N Carolina	97.52	3,937.84	1,989.47	
Ohio	101.91	3,937.84	1,814.56	
S Carolina	120.80	3,937.84	2,277.40	
Wisconsin	71.63	3,937.84	1,680.75	(C)

© 2024 Frontier Communications Parent, Inc. All rights reserved

5. SPECIAL ACCESS (Cont'd)

5.7 Rates and Charges (Cont'd)

5.7.5 Reserved (M)

© 2022 Frontier Communications Parent, Inc. All rights reserved

5. SPECIAL ACCESS (Cont'd)

5.7 Rates and Charges (Cont'd)

5.7.5 Digital Data Service Facilities (Cont'd)
(2.4, 4.8, 9.6, 19.2, 56, 64 Kbps)

(B) DDS Optional Payment Plan#

	Special Access Line (Secondary CDL)			
	All Speeds Nonrecurring Charge	2.4, 4.8, 9.6, 19.2 Kbps Monthly Rates		
Jurisdiction		1 Year MRC	3 Year MRC	5 Year MRC
California-WC	0.00	97.91	85.35	82.59
Illinois				
Price Band A	0.00	65.00	55.00	54.50
Price Band B	0.00	65.00	55.00	54.50
Price Band C	0.00	65.00	55.00	54.50
Indiana				
Price Band A	0.00	74.00	64.00	63.50
Price Band B	0.00	74.00	64.00	63.50
Price Band C	0.00	74.00	64.00	63.50
Michigan	0.00	97.91	85.35	82.59

(D)

Service availability limited. Refer to # footnote on Page 5-88.

© 2022 Frontier Communications Parent, Inc. All rights reserved

5. SPECIAL ACCESS (Cont'd)

5.7 Rates and Charges (Cont'd)

5.7.5 Digital Data Service Facilities (Cont'd)
(2.4, 4.8, 9.6, 19.2, 56, 64 Kbps)

(B) DDS Optional Payment Plan#

	Special Access Line (Secondary CDL)			
	All Speeds Nonrecurring Charge	2.4, 4.8, 9.6, 19.2 Kbps Monthly Rates		
Jurisdiction		1 Year MRC	3 Year MRC	5 Year MRC
N Carolina	$0.00	$92.88	$80.33	$78.58
Ohio				
Price Band A	0.00	74.00	64.00	63.50
Price Band B	0.00	74.00	64.00	63.50
Price Band C	0.00	74.00	64.00	63.50
				(D)
S Carolina	0.00	97.91	85.35	78.58
				(D)
Wisconsin	0.00	65.86	56.97	55.71

Service availability limited. Refer to # footnote on Page 5-88.

© 2022 Frontier Communications Parent, Inc. All rights reserved

5. SPECIAL ACCESS (Cont'd)

5.7 Rates and Charges (Cont'd)

5.7.5 Digital Data Service Facilities (Cont'd)
(2.4, 4.8, 9.6, 19.2, 56, 64 Kbps)

(B) DDS Optional Payment Plan#

Special Access Line (IC CDL)					
	All Speeds Nonrecurring Charge	2.4, 4.8, 9.6, 19.2 Kbps Monthly Rates			
Jurisdiction		1 Year MRC	3 Year MRC	5 Year MRC	
California-WC	0.00	97.91	85.35	82.59	(D)
					(D)
					(D)
					(D)
Illinois					
Price Band A	0.00	65.00	55.00	54.50	
Price Band B	0.00	65.00	55.00	54.50	
Price Band C	0.00	65.00	55.00	54.50	
Indiana					
Price Band A	0.00	74.00	64.00	63.50	
Price Band B	0.00	74.00	64.00	63.50	
Price Band C	0.00	74.00	64.00	63.50	
Michigan	0.00	97.91	85.35	82.59	

Service availability limited. Refer to # footnote on Page 5-88.

© 2022 Frontier Communications Parent, Inc. All rights reserved

5. SPECIAL ACCESS (Cont'd)

5.7 Rates and Charges (Cont'd)

5.7.5 Digital Data Service Facilities (Cont'd)
(2.4, 4.8, 9.6, 19.2, 56, 64 Kbps)

(B) DDS Optional Payment Plan#

Jurisdiction	Special Access Line (IC CDL) All Speeds Nonrecurring Charge	2.4, 4.8, 9.6, 19.2 Kbps Monthly Rates 1 Year MRC	3 Year MRC	5 Year MRC	
N Carolina					
Price Band A	$0.00	$74.00	$64.00	$63.50	
Price Band B	0.00	74.00	64.00	63.50	
Price Band C	0.00	74.00	64.00	63.50	
Ohio					
Price Band A	0.00	74.00	64.00	63.50	
Price Band B	0.00	74.00	64.00	63.50	
Price Band C	0.00	74.00	64.00	63.50	
					(D)
					(D)
					(D)
					(D)
S Carolina	0.00	97.91	85.35	78.58	
					(D)
					(D)
					(D)
					(D)
Wisconsin	0.00	65.86	56.97	55.71	

Service availability limited. Refer to # footnote on Page 5-88.

© 2022 Frontier Communications Parent, Inc. All rights reserved

5. SPECIAL ACCESS (Cont'd)

5.7 Rates and Charges (Cont'd)

5.7.5 Digital Data Service Facilities (Cont'd)
(2.4, 4.8, 9.6, 19.2, 56, 64 Kbps)

(B) DDS Optional Payment Plan# (Cont'd)

	Special Access Line (Secondary CDL) 56, 64 Kbps Monthly Rate			
Jurisdiction	1 Year MRC	3 Year MRC	5 Year MRC	
California-WC	121.75	109.20	106.44	(D)
Illinois				
Price Band A	78.00	68.00	66.20	
Price Band B	78.00	68.00	66.20	
Price Band C	78.00	68.00	66.20	
Indiana				
Price Band A	94.00	84.00	80.60	
Price Band B	94.00	84.00	80.60	
Price Band C	94.00	84.00	80.60	
Michigan	107.88	105.44	104.81	

Service availability limited. Refer to # footnote on Page 5-88.

© 2022 Frontier Communications Parent, Inc. All rights reserved

5. SPECIAL ACCESS (Cont'd)

5.7 Rates and Charges (Cont'd)

5.7.5 Digital Data Service Facilities (Cont'd)
(2.4, 4.8, 9.6, 19.2, 56, 64 Kbps)

(B) DDS Optional Payment Plan# (Cont'd)

	Special Access Line (Secondary CDL) 56, 64 Kbps Monthly Rate			
	1 Year MRC	3 Year MRC	5 Year MRC	
Jurisdiction				
N Carolina	$107.95	$105.44	$101.17	
Ohio				
Price Band A	94.00	84.00	80.60	
Price Band B	94.00	84.00	80.60	
Price Band B	94.00	84.00	80.60	
				(D)
S Carolina	116.73	109.20	101.17	
				(D)
Wisconsin	78.05	74.76	71.73	

Service availability limited. Refer to # footnote on Page 5-88.

© 2022 Frontier Communications Parent, Inc. All rights reserved

5. SPECIAL ACCESS (Cont'd)

5.7 Rates and Charges (Cont'd)

5.7.5 Digital Data Service Facilities (Cont'd)
(2.4, 4.8, 9.6, 19.2, 56, 64 Kbps)

(B) DDS Optional Payment Plan# (Cont'd)

	Special Access Line (IC CDL) 56, 64 Kbps Monthly Rate			
	1 Year MRC	3 Year MRC	5 Year MRC	
Jurisdiction				
California-WC	121.75	109.20	106.44	(D)
				(D)
				(D)
				(D)
Illinois				
Price Band A	78.00	68.00	66.20	
Price Band B	78.00	68.00	66.20	
Price Band C	78.00	68.00	66.20	
Indiana				
Price Band A	94.00	84.00	80.60	
Price Band B	94.00	84.00	80.60	
Price Band C	94.00	84.00	80.60	
Michigan	107.88	105.44	104.81	

Service availability limited. Refer to # footnote on Page 5-88.

© 2022 Frontier Communications Parent, Inc. All rights reserved

5. SPECIAL ACCESS (Cont'd)

5.7 Rates and Charges (Cont'd)

5.7.5 Digital Data Service Facilities (Cont'd)
(2.4, 4.8, 9.6, 19.2, 56, 64 Kbps)

(B) DDS Optional Payment Plan# (Cont'd)

	Special Access Line (IC CDL) 56, 64 Kbps Monthly Rate			
Jurisdiction	1 Year MRC	3 Year MRC	5 Year MRC	
N Carolina				
Price Band A	$ 94.40	$ 84.00	$ 80.60	(D)
Price Band B	94.40	84.00	80.60	(D)
Price Band B	94.40	84.00	80.60	(D)
				(D)
Ohio				
Price Band A	94.00	84.00	80.60	(D)
Price Band B	94.00	84.00	80.60	(D)
Price Band B	94.00	84.00	80.60	(D)
				(D)
S Carolina	116.73	109.20	101.17	
Wisconsin	78.05	74.76	71.73	

Service availability limited. Refer to # footnote on Page 5-88.

© 2022 Frontier Communications Parent, Inc. All rights reserved

5 SPECIAL ACCESS (Cont'd)

5.7 Rates and Charges (Cont'd)

5.7.5 Digital Data Service Facilities (Cont'd)

(C) Optional Arrangements

	Supplemental Features		
	DDS Bridging (Per Port) Monthly Rate	Secondary Channel Monthly Rate	
Jurisdiction			
California-WC	11.00	7.00	
			(D)
			(D)
			(D)
Illinois			
Price Cap	11.00	NA	
Price Bands A, B, and C	11.00	NA	
Indiana			
Price Cap	11.00	NA	
Price Bands A, B, and C	11.00	NA	
Michigan	11.00	19.50	

© 2022 Frontier Communications Parent, Inc. All rights reserved

5 SPECIAL ACCESS (Cont'd)

5.7 Rates and Charges (Cont'd)

5.7.5 Digital Data Service Facilities (Cont'd)

(C) Optional Arrangements

	Supplemental Features		
	DDS Bridging (Per Port) Monthly Rate	Secondary Channel Monthly Rate	
Jurisdiction			
N Carolina			
Price Cap	11.00	7.00	
Price Bands A, B, and C	11.00	7.00	
Ohio			
Price Cap	11.00	NA	
Price Bands A, B, and C	11.00	NA	
			(D)
			(D)
S Carolina	11.00	7.00	
			(D)
			(D)
			(D)
Wisconsin	11.00	NA	

© 2022 Frontier Communications Parent, Inc. All rights reserved

5 SPECIAL ACCESS (Cont'd)

5.7 Rates and Charges (Cont'd)

5.7.5.1 Bonded Digital Link Service

		Monthly Rates	
	Intra-office Channel - Per DS0		
Indiana	Price Bands A, B and C	3.00	(D) (D)
	Inter-office Channel - Per DS0		
Indiana	Price Bands A, B and C	7.00	(D) (D)

© 2022 Frontier Communications Parent, Inc. All rights reserved

5. SPECIAL ACCESS (Cont'd)

5.7 Rates and Charges (Cont'd)

5.7.6 Multiplexing Arrangements

DS1 to Voice

Jurisdiction	Nonrecurring Charge	Monthly Rate	
California-WC	$12,601.09	$2,573.34	(C)
Illinois	12,601.09	3,071.52	
Indiana	12,601.09	2,077.68	
Michigan	12,601.09	3,089.99	
N Carolina All Price Bands	12,601.09	3,465.30	
Ohio	12,601.09	2,117.93	
S Carolina	12,601.09	2,857.15	
Wisconsin	12,601.09	1,885.67	

(C)

© 2024 Frontier Communications Parent, Inc. All rights reserved

5. SPECIAL ACCESS (Cont'd)

5.7 Rates and Charges (Cont'd)

5.7.6 Reserved

© 2022 Frontier Communications Parent, Inc. All rights reserved

5. SPECIAL ACCESS (Cont'd)

5.7 Rates and Charges (Cont'd)

5.7.6 Multiplexing Arrangements (Cont'd)

DS3 to DS1 and/or E1**

Jurisdiction	Nonrecurring Charge	Monthly Rate	
California-WC	$7,088.12	$2,573.34	(C)
Illinois	7,088.12	5,385.47	
Indiana	7,088.12	3,477.91	
Michigan	7,088.12	5,430.93	
N Carolina	7,088.12	5,694.19	
Ohio	7,088.12	5,678.45	
S Carolina	7,088.12	5,857.46	
Wisconsin	7,088.12	4,678.99	(C)

** Where E1 service is available.

© 2024 Frontier Communications Parent, Inc. All rights reserved

5. SPECIAL ACCESS (Cont'd)

5.7 Rates and Charges (Cont'd)

5.7.6 Reserved

© 2022 Frontier Communications Parent, Inc. All rights reserved

5 SPECIAL ACCESS (Cont'd)

5.7 Rates and Charges (Cont'd)

5.7.6 Multiplexing Arrangements (Cont'd)

	Digital Data Carrier Multiplexer		
	Nonrecurring Charge	Monthly Rate	
Jurisdiction			
California-WC	1,500.00	284.63	
			(D)
			(D)
			(D)
			(D)
Illinois			
Price Band A	1,500.00	275.00	
Price Band B	1,500.00	275.00	
Price Band C	1,500.00	275.00	
Indiana			
Price Band A	1,500.00	275.00	
Price Band B	1,500.00	275.00	
Price Band C	1,500.00	275.00	
Michigan	1,500.00	284.63	

© 2022 Frontier Communications Parent, Inc. All rights reserved

5 SPECIAL ACCESS (Cont'd)

5.7 Rates and Charges (Cont'd)

5.7.6 Multiplexing Arrangements (Cont'd)

Jurisdiction	Digital Data Carrier Multiplexer Nonrecurring Charge	Monthly Rate	
N Carolina			
Price Band A	$1,500.00	$275.00	(D)
Price Band B	1,500.00	275.00	(D)
Price Band C	1,500.00	275.00	(D)
Ohio			
Price Band A	1,500.00	275.00	(D)
Price Band B	1,500.00	275.00	(D)
Price Band C	1,500.00	275.00	(D)
S Carolina	1,500.00	284.63	
Wisconsin	1,500.00	284.63	

© 2022 Frontier Communications Parent, Inc. All rights reserved

5 SPECIAL ACCESS (Cont'd)

5.7 Rates and Charges (Cont'd)

5.7.6 Multiplexing Arrangements (Cont'd)

	Digital Data Subrate Multiplexer				
	One DSO to Twenty 2.4 Kbps		One DSO to Ten 4.8 Kbps		
	Nonrecurring Charge	Monthly Rate	Nonrecurring Charge	Monthly Rate	
Jurisdiction					
California-WC	800.00	160.00	800.00	120.00	(D) (D) (D) (D)
Illinois					
Price Band A	800.00	160.00	800.00	120.00	
Price Band B	800.00	160.00	800.00	120.00	
Price Band C	800.00	160.00	800.00	120.00	
Indiana					
Price Band A	800.00	160.00	800.00	120.00	
Price Band B	800.00	160.00	800.00	120.00	
Price Band C	800.00	160.00	800.00	120.00	
Michigan	800.00	160.00	800.00	120.00	

© 2022 Frontier Communications Parent, Inc. All rights reserved

5 SPECIAL ACCESS (Cont'd)

5.7 Rates and Charges (Cont'd)

5.7.6 Multiplexing Arrangements (Cont'd)

	Digital Data Subrate Multiplexer				
	One DSO to Twenty 2.4 Kbps		One DSO to Ten 4.8 Kbps		
	Nonrecurring Charge	Monthly Rate	Nonrecurring Charge	Monthly Rate	
Jurisdiction					
N Carolina					
Price Band A	800.00	160.00	800.00	120.00	
Price Band B	800.00	160.00	800.00	120.00	
Price Band C	800.00	160.00	800.00	120.00	
Ohio					
Price Band A	800.00	160.00	800.00	120.00	
Price Band B	800.00	160.00	800.00	120.00	
Price Band C	800.00	160.00	800.00	120.00	
					(D)
					(D)
					(D)
					(D)
S Carolina	800.00	160.00	800.00	120.00	
					(D)
					(D)
					(D)
					(D)
Wisconsin	800.00	160.00	800.00	120.00	

© 2022 Frontier Communications Parent, Inc. All rights reserved

5 SPECIAL ACCESS (Cont'd)

5.7 Rates and Charges (Cont'd)

5.7.6 Multiplexing Arrangements (Cont'd)

	Digital Data Subrate Multiplexer One DSO Port to Five 9.6 Kbps		
Jurisdiction	Nonrecurring Charge	Monthly Rate	
California-WC	800.00	100.00	(D)
			(D)
			(D)
			(D)
Illinois			
Price Band A	800.00	100.00	
Price Band B	800.00	100.00	
Price Band C	800.00	100.00	
Indiana			
Price Band A	800.00	100.00	
Price Band B	800.00	100.00	
Price Band C	800.00	100.00	
Michigan	800.00	100.00	

© 2022 Frontier Communications Parent, Inc. All rights reserved

5 SPECIAL ACCESS (Cont'd)

5.7 Rates and Charges (Cont'd)

5.7.6 Multiplexing Arrangements (Cont'd)

	Digital Data Subrate Multiplexer One DSO Port to Five 9.6 Kbps		
	Nonrecurring Charge	Monthly Rate	
Jurisdiction			
N Carolina			
Price Band A	800.00	100.00	(D)
Price Band B	800.00	100.00	(D)
Price Band C	800.00	100.00	(D)
Ohio			
Price Band A	800.00	100.00	(D)
Price Band B	800.00	100.00	(D)
Price Band C	800.00	100.00	(D)
S Carolina	800.00	100.00	
Wisconsin	800.00	100.00	

© 2022 Frontier Communications Parent, Inc. All rights reserved

5. SPECIAL ACCESS (Cont'd)

5.7 Rates and Charges (Cont'd)

5.7.7 High Capacity DS1 (1.544 Mbps) Facilities

(A) Standard Arrangements

	Special Access Line (Secondary CDL)		
Jurisdiction	Nonrecurring Charge	Monthly Rate	
California-WC	$8,860.21	$4,657.76	(C)
Illinois	8,860.21	3,685.84	
Indiana	8,860.21	4,331.61	
Michigan	8,860.21	3,622.82	
North Carolina	8,860.21	3,827.60	
Ohio	8,860.21	4,331.61	
South Carolina	8,860.21	4,567.90	
Wisconsin	8,860.21	3,512.54	
			(C)

© 2024 Frontier Communications Parent, Inc. All rights reserved

5. SPECIAL ACCESS (Cont'd)

5.7 Rates and Charges (Cont'd)

5.7.7 Reserved (M)

© 2022 Frontier Communications Parent, Inc. All rights reserved

5. SPECIAL ACCESS (Cont'd)

5.7 Rates and Charges (Cont'd)

5.7.7 High Capacity DS1 (1.544 Mbps) Facilities (Cont'd)

(A) Standard Arrangements (Cont'd)

Jurisdiction	Special Access Line (IC CDL) Nonrecurring Charge	Special Access Line (IC CDL) Monthly Rate	
California-WC	$7,088.12	$5,123.44	(C)
Illinois	7,088.12	3,685.84	
Indiana	7,088.12	4,331.61	
Michigan	7,088.12	3,985.09	
North Carolina All Price Bands	7,088.12	4,430.94	
Ohio	7,088.12	4,331.61	
South Carolina	7,088.12	5,024.69	
Wisconsin	7,088.12	3,863.88	
			(C)

© 2024 Frontier Communications Parent, Inc. All rights reserved

5. SPECIAL ACCESS (Cont'd)

5.7 Rates and Charges (Cont'd)

5.7.7 Reserved (M)

© 2022 Frontier Communications Parent, Inc. All rights reserved

5. SPECIAL ACCESS (Cont'd)

5.7 Rates and Charges (Cont'd)

5.7.7 High Capacity DS1 (1.544 Mbps) Facilities (Cont'd)

(A) Standard Arrangements (Cont'd)

Jurisdiction	Special Transport Termination Monthly Rate	Special Transport (Per Airline Mile) Monthly Rate	
California-WC	$438.99	$173.26	(C)
Illinois	400.91	131.07	
Indiana	406.38	152.86	
Michigan	542.67	200.53	
N Carolina	677.31	224.51	
Ohio	485.15	173.26	
S Carolina	528.97	192.05	
Wisconsin	341.87	116.98	(C)

© 2024 Frontier Communications Parent, Inc. All rights reserved

5. SPECIAL ACCESS (Cont'd)

5.7 Rates and Charges (Cont'd)

5.7.7 Reserved

(M)

© 2022 Frontier Communications Parent, Inc. All rights reserved

5 SPECIAL ACCESS (Cont'd)

5.7 Rates and Charges (Cont'd)

5.7.7 High Capacity DS1 (1.544 Mbps) Facilities (Cont'd)

(B) Optional Arrangements

	MetroLAN - Special Transport Per DS1, FiberConnect/LAN Traversed #						
	One Year Monthly Rate	Two Year Monthly Rate	Three Year Monthly Rate	Five Year Monthly Rate	Eight Year Monthly Rate	Ten Year Monthly Rate	
Jurisdiction							
California-WC	NA	NA	NA	NA	NA	NA	
Illinois	NA	NA	NA	NA	NA	NA	
Indiana							
All Price Bands	491.67	491.67	491.67	491.67	491.67	491.67	(C)
Michigan	NA	NA	NA	NA	NA	NA	

Service Availability is limited. Refer to # footnote on page 5-115.

© 2024 Frontier Communications Parent, Inc. All rights reserved

5 SPECIAL ACCESS (Cont'd)

5.7 Rates and Charges (Cont'd)

5.7.7 High Capacity DS1 (1.544 Mbps) Facilities (Cont'd)

(B) Optional Arrangements

	MetroLAN - Special Transport Per DS1, FiberConnect/LAN Traversed #						
	One Year Monthly Rate	Two Year Monthly Rate	Three Year Monthly Rate	Five Year Monthly Rate	Eight Year Monthly Rate	Ten Year Monthly Rate	
Jurisdiction							
North Carolina							
All Price Bands	$533.57	$533.57	$533.57	$533.57	$533.57	$533.57	(C)
Ohio	NA	NA	NA	NA	NA	NA	
South Carolina	NA	NA	NA	NA	NA	NA	
Wisconsin	NA	NA	NA	NA	NA	NA	

Service Availability is limited. Refer to # footnote on page 5-115.

© 2024 Frontier Communications Parent, Inc. All rights reserved

5 SPECIAL ACCESS (Cont'd)

5.7 Rates and Charges (Cont'd)

5.7.7 High Capacity DS1 (1.544 Mbps) Facilities (Cont'd)

(B) Optional Arrangements (Cont'd)

Supplemental Features
Automatic Protection Switching

Jurisdiction	Nonrecurring Charge	Monthly Rate	
California-WC	700.00	100.00	
			(D)
			(D)
			(D)
			(D)
Illinois			
Price Band A	700.00	100.00	
Price Band B	700.00	100.00	
Price Band C	700.00	100.00	
Indiana			
Price Band A	700.00	100.00	
Price Band B	700.00	100.00	
Price Band C	700.00	100.00	
Michigan	700.00	100.00	

© 2022 Frontier Communications Parent, Inc. All rights reserved

5 SPECIAL ACCESS (Cont'd)

5.7 Rates and Charges (Cont'd)

5.7.7 High Capacity DS1 (1.544 Mbps) Facilities (Cont'd)

(B) Optional Arrangements (Cont'd)

Supplemental Features
Automatic Protection Switching

Jurisdiction	Nonrecurring Charge	Monthly Rate	
N Carolina			
Price Band A	700.00	100.00	(D)
Price Band B	700.00	100.00	(D)
Price Band C	700.00	100.00	(D)
Ohio			
Price Band A	700.00	100.00	(D)
Price Band B	700.00	100.00	(D)
Price Band C	700.00	100.00	(D)
S Carolina	700.00	100.00	
Wisconsin	700.00	100.00	

© 2022 Frontier Communications Parent, Inc. All rights reserved

5 SPECIAL ACCESS (Cont'd)

5.7 Rates and Charges (Cont'd)

5.7.8 High Capacity Digital FiberConnect (4 X 1.544 Mbps) Facilities

(A) FiberConnect Optional Payment Plan#

Special Access Line - Electrical Interface (Secondary CDL)

Rate	Nonrecurring Charge	One Year Monthly Rate	Three Year Monthly Rate	Five Year Monthly	
California-WC					
Competitive	1,250.00	968.00	716.00	572.00	
					(D)
					(D)
Illinois					
Price Band A	1,250.00	932.00	688.00	548.00	
Price Band B	1,250.00	932.00	688.00	548.00	
Price Band C	1,250.00	932.00	688.00	548.00	
Indiana					
Price Band A	1,250.00	908.00	672.00	536.00	
Price Band B	1,250.00	908.00	672.00	536.00	
Price Band C	1,250.00	908.00	672.00	536.00	
Michigan					
Competitive	1,250.00	1,024.00	756.00	604.00	

Service availability is limited. See # footnote on Page 5-45.

© 2022 Frontier Communications Parent, Inc. All rights reserved

5 SPECIAL ACCESS (Cont'd)

5.7 Rates and Charges (Cont'd)

5.7.8 High Capacity Digital FiberConnect (4 X 1.544 Mbps) Facilities (Cont'd)

(A) FiberConnect Optional Payment Plan (Cont'd)

	Special Access Line - Electrical Interface (Secondary CDL)				
	Nonrecurring Charge	One Year Monthly Rate	Three Year Monthly Rate	Five Year Monthly Rate	
N Carolina					
Competitive	1,250.00	992.00	732.00	584.00	
Ohio					
Price Band A	1,250.00	932.00	688.00	548.00	
Price Band B	1,250.00	932.00	688.00	548.00	
Price Band C	1,250.00	932.00	688.00	548.00	
					(D)
					(D)
S Carolina					
Competitive	1,250.00	972.00	720.00	576.00	
					(D)
					(D)
Wisconsin					
Competitive	1,250.00	1,000.00	740.00	592.00	

© 2022 Frontier Communications Parent, Inc. All rights reserved

5 SPECIAL ACCESS (Cont'd)

5.7 Rates and Charges (Cont'd)

5.7.8 High Capacity Digital FiberConnect ((4 X 1.544 Mbps) Facilities (Cont'd)

(A) FiberConnect Optional Payment Plan (Cont'd)
(B)

Special Access Line - Electrical Interface (IC CDL)

	Nonrecurring Charge	One Year Monthly Rate	Three Year Monthly Rate	Five Year Monthly Rate
California-WC	1,000.00	968.00	716.00	572.00
				(D)
Illinois				
Price Band A	1,000.00	932.00	688.00	548.00
Price Band B	1,000.00	932.00	688.00	548.00
Price Band C	1,000.00	932.00	688.00	548.00
Indiana				
Price Band A	1,000.00	908.00	672.00	536.00
Price Band B	1,000.00	908.00	672.00	536.00
Price Band C	1,000.00	908.00	672.00	536.00
Michigan	1,000.00	1,024.00	756.00	604.00

© 2022 Frontier Communications Parent, Inc. All rights reserved

5 SPECIAL ACCESS (Cont'd)

5.7 Rates and Charges (Cont'd)

5.7.8 High Capacity Digital FiberConnect (4 X 1.544 Mbps) Facilities (Cont'd)

(A) FiberConnect Optional Payment Plan (Cont'd)

Special Access Line - Electrical Interface (IC CDL)

	Nonrecurring Charge	One Year Monthly Rate	Three Year Monthly Rate	Five Year Monthly Rate	
N Carolina					
Price Band A	$1,000.00	$ 992.00	$ 732.00	$ 584.00	
Price Band B	1,000.00	992.00	732.00	584.00	
Price Band C	1,000.00	992.00	732.00	584.00	
Ohio					
Price Band A	1,000.00	932.00	688.00	548.00	
Price Band B	1,000.00	932.00	688.00	548.00	
Price Band C	1,000.00	932.00	688.00	548.00	
					(D)
					(D)
					(D)
					(D)
S Carolina	1,000.00	972.00	720.00	576.00	
					(D)
					(D)
					(D)
					(D)
Wisconsin	1,000.00	1,000.00	740.00	592.00	

© 2022 Frontier Communications Parent, Inc. All rights reserved

5 SPECIAL ACCESS (Cont'd)

5.7 Rates and Charges (Cont'd)

5.7.9 High Capacity Digital FT1 Facilities

(A) Standard Arrangement - 2 X 56 Kbps or 2 X 64 Kbps

Special Access Line (Secondary CDL)

	Nonrecurring Charge	Monthly Rate	
California-WC			
Competitive	NA	NA	
			(D)
			(D)
Illinois			
Competitive	562.50	121.69	
Indiana			
Competitive	562.50	103.00	
Michigan			
Competitive	562.50	103.00	
N Carolina			
Competitive	562.50	103.00	
Ohio			
Competitive	562.50	117.29	
			(D)
			(D)
S Carolina			
Competitive	562.50	121.00	
			(D)
			(D)
Wisconsin			
Competitive	562.50	103.00	

© 2022 Frontier Communications Parent, Inc. All rights reserved

5 SPECIAL ACCESS (Cont'd)

5.7 Rates and Charges (Cont'd)

5.7.9 High Capacity Digital FT1 Facilities

(A) Standard Arrangement - 2 X 56 Kbps or 2 X 64 Kbps

	Special Access Line (IC CDL)				
	Nonrecurring Charge	Monthly Rate	Special Transport	Special Transport Termination	
California-WC	NA	NA	NA	NA	
					(D)
					(D)
					(D)
					(D)
Illinois					
Price Band A	450.00	121.69	6.00	20.00	
Price Band B	450.00	121.69	6.00	20.00	
Price Band C	450.00	121.69	6.00	20.00	
Indiana					
Price Band A	450.00	123.60	6.60	14.40	
Price Band B	450.00	123.60	6.60	14.40	
Price Band C	450.00	123.60	6.60	14.40	
Michigan	450.00	103.00	5.50	12.00	

© 2022 Frontier Communications Parent, Inc. All rights reserved

5 SPECIAL ACCESS (Cont'd)

5.7 Rates and Charges (Cont'd)

5.7.9 High Capacity Digital FT1 Facilities

(A) Standard Arrangement - 2 X 56 Kbps or 2 X 64 Kbps

	Special Access Line (IC CDL)				
	Nonrecurring Charge	Monthly Rate	Special Transport	Special Transport Termination	
N Carolina					
Price Band A	$450.00	$123.60	$6.60	$14.40	
Price Band B	450.00	123.60	6.60	14.40	
Price Band C	450.00	123.60	6.60	14.40	
Ohio					
Price Band A	450.00	123.60	6.60	14.40	
Price Band B	450.00	123.60	6.60	14.40	
Price Band C	450.00	123.60	6.60	14.40	
					(D)
					(D)
					(D)
					(D)
S Carolina	450.00	121.00	2.10	14.00	
					(D)
					(D)
					(D)
					(D)
Wisconsin	450.00	103.00	2.26	16.00	

© 2022 Frontier Communications Parent, Inc. All rights reserved

5 SPECIAL ACCESS (Cont'd)

5.7 Rates and Charges (Cont'd)

5.7.9 High Capacity Digital FT1 Facilities (Cont'd)

(A) Standard Arrangement - 4 X 56 Kbps or 4 X 64 Kbps (Cont'd)

Special Access Line (Secondary CDL)

	Nonrecurring Charge	Monthly Rate	
California-WC			
Competitive	NA	NA	
			(D)
			(D)
Illinois			
Competitive	562.50	129.12	
Indiana			
Competitive	562.50	111.00	
Michigan			
Competitive	562.50	111.00	
N Carolina			
Competitive	562.50	111.00	
Ohio			
Competitive	562.50	124.68	
			(D)
			(D)
S Carolina			
Competitive	562.50	131.00	
			(D)
			(D)
Wisconsin			
Competitive	562.50	116.00	

© 2022 Frontier Communications Parent, Inc. All rights reserved

5 SPECIAL ACCESS (Cont'd)

5.7 Rates and Charges (Cont'd)

5.7.9 High Capacity Digital FT1 Facilities (Cont'd)

(A) Standard Arrangement - 4 X 56 Kbps or 4 X 64 Kbps (Cont'd)

	Special Access Line (IC CDL)				
	Nonrecurring Charge	Monthly Rate	Special Transport	Special Transport Termination	
California-WC	NA	NA	NA	NA	
					(D)
					(D)
					(D)
					(D)
Illinois					
Price Band A	450.00	129.12	7.00	30.00	
Price Band B	450.00	129.12	7.00	30.00	
Price Band C	450.00	129.12	7.00	30.00	
Indiana					
Price Band A	450.00	133.20	7.80	21.60	
Price Band B	450.00	133.20	7.80	21.60	
Price Band C	450.00	133.20	7.80	21.60	
Michigan	450.00	111.00	6.50	18.00	

© 2022 Frontier Communications Parent, Inc. All rights reserved

5 SPECIAL ACCESS (Cont'd)

5.7 Rates and Charges (Cont'd)

5.7.9 High Capacity Digital FT1 Facilities (Cont'd)

(A) Standard Arrangement - 4 X 56 Kbps or 4 X 64 Kbps (Cont'd)

	Special Access Line (IC CDL)				
	Nonrecurring Charge	Monthly Rate	Special Transport	Special Transport Termination	
N Carolina					
Price Band A	$450.00	$133.20	$7.80	$21.60	
Price Band B	450.00	133.20	7.80	21.60	
Price Band C	450.00	133.20	7.80	21.60	
Ohio					
Price Band A	450.00	133.20	7.80	21.60	
Price Band B	450.00	133.20	7.80	21.60	
Price Band C	450.00	133.20	7.80	21.60	
					(D)
					(D)
					(D)
					(D)
S Carolina	450.00	131.00	2.14	18.00	
					(D)
					(D)
					(D)
					(D)
Wisconsin	450.00	116.00	2.30	18.00	

© 2022 Frontier Communications Parent, Inc. All rights reserved

5 SPECIAL ACCESS (Cont'd)

5.7 Rates and Charges (Cont'd)

5.7.9 High Capacity Digital FT1 Facilities (Cont'd)

(A) Standard Arrangement – 6 X 56 Kbps or 6 X 64 Kbps (Cont'd)

Special Access Line (Secondary CDL)

	Nonrecurring Charge	Monthly Rate	
California-WC			
Competitive	NA	NA	
			(D)
			(D)
Illinois			
Competitive	562.50	136.56	
Indiana			
Competitive	562.50	119.00	
Michigan			
Competitive	562.50	119.00	
N Carolina			
Competitive	562.50	119.00	
Ohio			
Competitive	562.50	132.08	
			(D)
			(D)
S Carolina			
Competitive	562.50	141.00	
			(D)
			(D)
Wisconsin			
Competitive	562.50	130.00	

© 2022 Frontier Communications Parent, Inc. All rights reserved

5 SPECIAL ACCESS (Cont'd)

5.7 Rates and Charges (Cont'd)

5.7.9 High Capacity Digital FT1 Facilities (Cont'd)

(A) Standard Arrangement – 6 X 56 Kbps or 6 X 64 Kbps (Cont'd)

	Special Access Line (IC CDL)				
	Nonrecurring Charge	Monthly Rate	Special Transport	Special Transport Termination	
California-WC	NA	NA	NA	NA	
					(D)
					(D)
					(D)
					(D)
Illinois					
Price Band A	450.00	136.56	8.00	40.00	
Price Band B	450.00	136.56	8.00	40.00	
Price Band C	450.00	136.56	8.00	40.00	
Indiana					
Price Band A	450.00	142.80	9.00	28.80	
Price Band B	450.00	142.80	9.00	28.80	
Price Band C	450.00	142.80	9.00	28.80	
Michigan	450.00	119.00	7.50	24.00	

© 2022 Frontier Communications Parent, Inc. All rights reserved

5 SPECIAL ACCESS (Cont'd)

5.7 Rates and Charges (Cont'd)

5.7.9 High Capacity Digital FT1 Facilities (Cont'd)

(A) Standard Arrangement – 6 X 56 Kbps or 6 X 64 Kbps (Cont'd)

	Special Access Line (IC CDL)				
	Nonrecurring Charge	Monthly Rate	Special Transport	Special Transport Termination	
N Carolina					
Price Band A	$450.00	$142.80	$9.00	$28.80	
Price Band B	450.00	142.80	9.00	28.80	
Price Band C	450.00	142.80	9.00	28.80	
Ohio					
Price Band A	450.00	142.80	9.00	28.80	
Price Band B	450.00	142.80	9.00	28.80	
Price Band C	450.00	142.80	9.00	28.80	
					(D)
					(D)
					(D)
					(D)
S Carolina	450.00	141.00	2.17	24.00	
					(D)
					(D)
					(D)
					(D)
Wisconsin	450.00	130.00	2.34	24.00	

© 2022 Frontier Communications Parent, Inc. All rights reserved

5 SPECIAL ACCESS (Cont'd)

5.7 Rates and Charges (Cont'd)

5.7.9 High Capacity Digital FT1 Facilities (Cont'd)

(B) FT1 Optional Payment Plan – 2 X 56 Kbps or 2 X 64 Kbps

Special Access Line (Secondary CDL, Competitive Counties)

	One Year Monthly Rate	Three Year Monthly Rate	Five Year Monthly Rate	
California-WC	NA	NA	NA	(D)
Illinois	110.00	99.00	88.00	
Indiana	100.00	90.00	80.00	
Michigan	100.00	90.00	80.00	
N Carolina	100.00	90.00	80.00	
Ohio	110.00	99.00	88.00	(D)
S Carolina	116.00	111.00	106.00	(D)
Wisconsin	101.00	99.00	97.00	

© 2022 Frontier Communications Parent, Inc. All rights reserved

5 SPECIAL ACCESS (Cont'd)

5.7 Rates and Charges (Cont'd)

5.7.9 High Capacity Digital FT1 Facilities (Cont'd)

(B) FT1 Optional Payment Plan – 2 X 56 Kbps or 2 X 64 Kbps

Special Access Line (IC CDL)

	One Year Monthly Rate	Three Year Monthly Rate	Five Year Monthly Rate	Special Transport	Special Transport Termination	
California-WC	NA	NA	NA	NA	NA	
						(D)
						(D)
						(D)
						(D)
Illinois						
Price Band A	110.00	99.00	88.00	6.00	20.00	
Price Band B	110.00	99.00	88.00	6.00	20.00	
Price Band C	110.00	99.00	88.00	6.00	20.00	
Indiana						
Price Band A	100.00	90.00	80.00	6.60	14.40	
Price Band B	100.00	90.00	80.00	6.60	14.40	
Price Band C	100.00	90.00	80.00	6.60	14.40	
Michigan	100.00	90.00	80.00	5.50	12.00	

© 2022 Frontier Communications Parent, Inc. All rights reserved

5 SPECIAL ACCESS (Cont'd)

5.7 Rates and Charges (Cont'd)

5.7.9 High Capacity Digital FT1 Facilities (Cont'd)

(B) FT1 Optional Payment Plan – 2 X 56 Kbps or 2 X 64 Kbps

	Special Access Line (IC CDL)					
	One Year Monthly Rate	Three Year Monthly Rate	Five Year Monthly Rate	Special Transport	Special Transport Termination	
N Carolina						
Price Band A	$100.00	$ 90.00	$ 80.00	$6.60	$14.40	
Price Band B	100.00	90.00	80.00	6.60	14.40	
Price Band C	100.00	90.00	80.00	6.60	14.40	
Ohio						
Price Band A	100.00	90.00	80.00	6.60	14.40	
Price Band B	100.00	90.00	80.00	6.60	14.40	
Price Band C	100.00	90.00	80.00	6.60	14.40	
						(D)
						(D)
						(D)
						(D)
S Carolina	116.00	111.00	106.00	2.10	14.00	
						(D)
						(D)
						(D)
						(D)
Wisconsin	101.00	99.00	97.00	2.26	16.00	

© 2022 Frontier Communications Parent, Inc. All rights reserved

5 SPECIAL ACCESS (Cont'd)

5.7 Rates and Charges (Cont'd)

5.7.9 High Capacity Digital FT1 Facilities (Cont'd)

(B) FT1 Optional Payment Plan – 4 X 56 Kbps or 4 X 64 Kbps (Cont'd)

Special Access Line (Secondary CDL, Competitive Counties)

	One Year Monthly Rate	Three Year Monthly Rate	Five Year Monthly Rate	
California-WC	NA	NA	NA	(D)
Illinois	120.00	108.00	96.00	
Indiana	110.00	99.00	88.00	
Michigan	110.00	99.00	88.00	
N Carolina	110.00	99.00	88.00	
Ohio	120.00	108.00	96.00	(D)
S Carolina	126.00	121.00	116.00	(D)
Wisconsin	113.00	108.00	106.00	

© 2022 Frontier Communications Parent, Inc. All rights reserved

5 SPECIAL ACCESS (Cont'd)

5.7 Rates and Charges (Cont'd)

5.7.9 High Capacity Digital FT1 Facilities (Cont'd)

(B) FT1 Optional Payment Plan – 4 X 56 Kbps or 4 X 64 Kbps (Cont'd)

Special Access Line (IC CDL)

	One Year Monthly Rate	Three Year Monthly Rate	Five Year Monthly Rate	Special Transport	Special Transport Termination	
California-WC	NA	NA	NA	NA	NA	
						(D)
						(D)
						(D)
						(D)
Illinois						
Price Band A	120.00	108.00	96.00	7.00	30.00	
Price Band B	120.00	108.00	96.00	7.00	30.00	
Price Band C	120.00	108.00	96.00	7.00	30.00	
Indiana						
Price Band A	110.00	99.00	88.00	7.80	21.60	
Price Band B	110.00	99.00	88.00	7.80	21.60	
Price Band C	110.00	99.00	88.00	7.80	21.60	
Michigan	110.00	99.00	88.00	6.50	18.00	

© 2022 Frontier Communications Parent, Inc. All rights reserved

5 SPECIAL ACCESS (Cont'd)

5.7 Rates and Charges (Cont'd)

5.7.9 High Capacity Digital FT1 Facilities (Cont'd)

(B) FT1 Optional Payment Plan – 4 X 56 Kbps or 4 X 64 Kbps (Cont'd)

Special Access Line (IC CDL)

	One Year Monthly Rate	Three Year Monthly Rate	Five Year Monthly Rate	Special Transport	Special Transport Termination	
N Carolina						
Price Band A	$110.00	$ 99.00	$ 88.00	$7.80	$21.60	
Price Band B	110.00	99.00	88.00	7.80	21.60	
Price Band C	110.00	99.00	88.00	7.80	21.60	
Ohio						
Price Band A	110.00	99.00	88.00	7.80	21.60	
Price Band B	110.00	99.00	88.00	7.80	21.60	
Price Band C	110.00	99.00	88.00	7.80	21.60	
						(D)
						(D)
						(D)
						(D)
S Carolina	126.00	121.00	116.00	2.14	18.00	
						(D)
						(D)
						(D)
						(D)
Wisconsin	113.00	108.00	106.00	2.30	18.00	

© 2022 Frontier Communications Parent, Inc. All rights reserved

5 SPECIAL ACCESS (Cont'd)

5.7 Rates and Charges (Cont'd)

5.7.9 High Capacity Digital FT1 Facilities (Cont'd)

(B) FT1 Optional Payment Plan – 6 X 56 Kbps or 6 X 64 Kbps (Cont'd)

Special Access Line (Secondary CDL, Competitive Counties)

	One Year Monthly Rate	Three Year Monthly Rate	Five Year Monthly Rate	
California-WC	NA	NA	NA	(D)
Illinois	130.00	117.00	104.00	
Indiana	119.00	107.00	95.00	
Michigan	119.00	107.00	95.00	
N Carolina	119.00	107.00	95.00	
Ohio	130.00	117.00	104.00	(D)
S Carolina	136.00	131.00	126.00	(D)
Wisconsin	125.00	120.00	117.00	

© 2022 Frontier Communications Parent, Inc. All rights reserved

5 SPECIAL ACCESS (Cont'd)

5.7 Rates and Charges (Cont'd)

5.7.9 High Capacity Digital FT1 Facilities (Cont'd)

(B) FT1 Optional Payment Plan – 6 X 56 Kbps or 6 X 64 Kbps (Cont'd)

Special Access Line (IC CDL)

	One Year Monthly Rate	Three Year Monthly Rate	Five Year Monthly Rate	Special Transport	Special Transport Termination	
California-WC	NA	NA	NA	NA	NA	
						(D)
						(D)
						(D)
						(D)
Illinois						
Price Band A	130.00	117.00	104.00	8.00	40.00	
Price Band B	130.00	117.00	104.00	8.00	40.00	
Price Band C	130.00	117.00	104.00	8.00	40.00	
Indiana						
Price Band A	119.00	107.00	95.00	9.00	28.80	
Price Band B	119.00	107.00	95.00	9.00	28.80	
Price Band C	119.00	107.00	95.00	9.00	28.80	
Michigan	119.00	107.00	95.00	7.50	24.00	

© 2022 Frontier Communications Parent, Inc. All rights reserved

5 SPECIAL ACCESS (Cont'd)

5.7 Rates and Charges (Cont'd)

5.7.9 High Capacity Digital FT1 Facilities (Cont'd)

(B) FT1 Optional Payment Plan – 6 X 56 Kbps or 6 X 64 Kbps (Cont'd)

Special Access Line (IC CDL)

	One Year Monthly Rate	Three Year Monthly Rate	Five Year Monthly Rate	Special Transport	Special Transport Termination
N Carolina					
Price Band A	$119.00	$107.00	$95.00	$9.00	$28.80
Price Band B	119.00	107.00	95.00	9.00	28.80
Price Band C	119.00	107.00	95.00	9.00	28.80
Ohio					
Price Band A	119.00	107.00	95.00	9.00	28.80
Price Band B	119.00	107.00	95.00	9.00	28.80
Price Band C	119.00	107.00	95.00	9.00	28.80
S Carolina	136.00	131.00	126.00	2.17	24.00
Wisconsin	125.00	120.00	117.00	2.34	24.00

© 2022 Frontier Communications Parent, Inc. All rights reserved

5. SPECIAL ACCESS (Cont'd)

5.7 Rates and Charges (Cont'd)

5.7.10 High Capacity Digital DS3 (44.736 Mbps) Facilities - Three System ##

(A) Protected DS3 - With Telephone Company Electronics

First Special Access Line (Secondary CDL)

Jurisdiction	Nonrecurring Charge
All States	$3,125.00

Jurisdiction	Month to Month Rate ###	One Year # Monthly Rate	Three Year # Monthly Rate	Five Year # Monthly Rate	Seven Year # Monthly Rate	(C)
California-WC						
Competitive	$2,607.00	$2,607.00	$2,354.00	$1,826.00	$1,430.00	
Illinois						
All Price Bands	1,480.00	1,480.00	1,240.00	1,108.00	1,040.00	
Indiana						
Price Band A	1,591.00	1,591.00	1,302.00	1,135.70	1,040.00	
Price Band B	1,628.00	1,628.00	1,333.00	1,163.40	1,066.00	
Price Band C	1,665.00	1,665.00	1,364.00	1,191.10	1,092.00	
Michigan						
Competitive	1,628.00	1,628.00	1,364.00	1,218.80	1,144.00	

#Service availability limited. Refer to # footnote on Page 5-80

Effective November 19, 2021, DS3 Term Rates are no longer permitted. DS3 Term Rates in effect as of November 19, 2021 may continue the existing term but will not be eligible to extend, renew, reenroll in, convert to a new term period, or in any other way continue their existing plan beyond its current expiration. At expiration of the term, the service will convert to the Month to Month Rate. If at any time an existing customer terminates its DS3 Term Rates, the customer may not re-subscribe to the rate.

Effective July 26, 2022 any Three System DS3 Service billing at the Month to Month rate will convert to the DS3 Individual System Month to Month rate. In addition, at the expiration of a service period, any Three System DS3 service will convert to the Individual System Month to Month rate. (N)

© 2022 Frontier Communications Parent, Inc. All rights reserved

5. SPECIAL ACCESS (Cont'd)

5.7 Rates and Charges (Cont'd)

5.7.10 High Capacity Digital DS3 (44.736 Mbps) Facilities - Three System ##

(A) Protected DS3 - With Telephone Company Electronics

First Special Access Line (Secondary CDL)

Jurisdiction	Month to Month Rate ###	One Year # Monthly Rate	Three Year # Monthly Rate	Five Year # Monthly Rate	Seven Year # Monthly Rate	(C)
N Carolina						
Competitive	$1,628.00	$1,628.00	$1,364.00	$1,218.80	$1,144.00	
Ohio						
Price Band A	1,591.00	1,591.00	1,302.00	1,135.70	1,040.00	
Price Band B	1,628.00	1,628.00	1,333.00	1,163.40	1,066.00	
Price Band C	1,665.00	1,665.00	1,364.00	1,191.10	1,092.00	
S Carolina						
Competitive	1,628.00	1,628.00	1,364.00	1,218.80	1,144.00	
Wisconsin						
Competitive	1,539.70	1,539.70	1,290.03	1,152.70	1,081.95	

#Service availability limited. Refer to # footnote on Page 5-80

Service Offer is limited. See footnote on page 5-326

Service Offer is limited further. See footnote on page 5-326 (N)

© 2022 Frontier Communications Parent, Inc. All rights reserved

5. SPECIAL ACCESS (Cont'd)

5.7 Rates and Charges (Cont'd)

5.7.10 High Capacity Digital DS3 (44.736 Mbps) Facilities - Three System ##

(A) Protected DS3 - With Telephone Company Electronics

First Special Access Line (IC CDL)

Jurisdiction	Nonrecurring Charge
All States	$2,500

Jurisdiction	Month to Month Rate###	One Year # Monthly Rate	Three Year # Monthly Rate	Five Year # Monthly Rate	Seven Year # Monthly Rate	(C)
California-WC						
Competitive	$2,607.00	$2,607.00	$2,354.00	$1,826.00	$1,430.00	
Price Cap	2,370.00	2,370.00	2,140.00	1,660.00	1,300.00	
Illinois						
All Price Bands	1,480.00	1,480.00	1,240.00	1,108.00	1,040.00	
Indiana						
Price Band A	1,591.00	1,591.00	1,302.00	1,135.70	1,040.00	
Price Band B	1,628.00	1,628.00	1,333.00	1,163.40	1,066.00	
Price Band C	1,665.00	1,665.00	1,364.00	1,191.10	1,092.00	
Michigan						
Competitive	1,628.00	1,628.00	1,364.00	1,218.80	1,144.00	
Price Cap	1,480.00	1,480.00	1,240.00	1,108.00	1,040.00	

#Service availability limited. Refer to # footnote on Page 5-80

Service Offer is limited. See footnote on page 5-326

Service Offer is limited further. See footnote on page 5-326 (N)

© 2022 Frontier Communications Parent, Inc. All rights reserved

5. SPECIAL ACCESS (Cont'd)

5.7 Rates and Charges (Cont'd)

5.7.10 High Capacity Digital DS3 (44.736 Mbps) Facilities - Three System ##

(A) Protected DS3 - With Telephone Company Electronics

First Special Access Line (IC CDL)

Jurisdiction	Month to Month Rate###	One Year # Monthly Rate	Three Year # Monthly Rate	Five Year # Monthly Rate	Seven Year # Monthly Rate	(C)
N Carolina						
Price Band A	$1,591.00	$1,591.00	$1,302.00	$1,135.70	$1,040.00	
Price Band B	1,628.00	1,628.00	1,333.00	1,163.40	1,066.00	
Price Band C	1,665.00	1,665.00	1,364.00	1,191.10	1,092.00	
Ohio						
Price Band A	1,591.00	1,591.00	1,302.00	1,135.70	1,040.00	
Price Band B	1,628.00	1,628.00	1,333.00	1,163.40	1,066.00	
Price Band C	1,665.00	1,665.00	1,364.00	1,191.10	1,092.00	
S Carolina						
Competitive	1,628.00	1,628.00	1,364.00	1,218.80	1,144.00	
Price Cap	1,480.00	1,480.00	1,240.00	1,108.00	1,040.00	
Wisconsin						
Competitive	1,539.70	1,539.70	1,290.03	1,152.70	1,081.95	
Price Cap	1,399.73	1,399.73	1,172.75	1,047.91	983.59	

#Service availability limited. Refer to # footnote on Page 5-80

Service Offer is limited. See footnote on page 5-326

Service Offer is limited further. See footnote on page 5-326 (N)

© 2022 Frontier Communications Parent, Inc. All rights reserved

5. SPECIAL ACCESS (Cont'd)

5.7 Rates and Charges (Cont'd)

5.7.10 High Capacity Digital DS3 (44.736 Mbps) Facilities - Three System ##

(A) Protected DS3 - With Telephone Company Electronics (Cont')

Each Additional Special Access Line - Maximum of 2 (Secondary CDL)

Jurisdiction	Nonrecurring Charge
All States	$1,250.00

Jurisdiction	Month to Month Rate###	One Year # Monthly Rate	Three Year # Monthly Rate	Five Year # Monthly Rate	Seven Year # Monthly Rate	(C)
California-WC						
Competitive	$1,955.25	$1,955.25	$1,765.50	$1,369.50	$1,072.50	
Illinois						
All Price Bands	1,110.00	1,110.00	930.00	831.00	780.00	
Indiana						
Price Band A	1,193.30	1,193.30	976.50	851.80	780.00	
Price Band B	1,221.00	1,221.00	999.80	872.60	799.50	
Price Band C	1,248.00	1,248.80	1,023.00	893.40	819.00	
Michigan						
Competitive	1,221.00	1,221.00	1,023.00	914.10	858.00	

#Service availability limited. Refer to # footnote on Page 5-80

Service Offer is limited. See footnote on page 5-326

Service Offer is limited further. See footnote on page 5-326 (N)

© 2022 Frontier Communications Parent, Inc. All rights reserved

5. SPECIAL ACCESS (Cont'd)

5.7 Rates and Charges (Cont'd)

5.7.10 High Capacity Digital DS3 (44.736 Mbps) Facilities - Three System ##

(A) Protected DS3 - With Telephone Company Electronics (Cont')

Each Additional Special Access Line - Maximum of 2 (Secondary CDL)

	Month to Month Rate###	One Year # Monthly Rate	Three Year # Monthly Rate	Five Year # Monthly Rate	Seven Year # Monthly Rate	(C)
N Carolina						
Competitive	$1,221.00	$1,221.00	$1,023.00	$914.10	$858.00	
Ohio						
Price Band A	1,193.00	1,193.30	976.50	851.80	780.00	
Price Band B	1,221.00	1,221.00	999.80	872.60	799.50	
Price Band C	1,248.80	1,248.80	1,023.00	893.40	819.00	
S Carolina						
Competitive	1,221.00	1,221.00	1,023.00	914.10	858.00	
Wisconsin						
Competitive	1,154.78	1,154.78	967.52	864.52	811.47	

Service availability limited. Refer to # footnote on Page 5-80

Service Offer is limited. See footnote on page 5-326

Service Offer is limited further. See footnote on page 5-326 (N)

© 2022 Frontier Communications Parent, Inc. All rights reserved

5. SPECIAL ACCESS (Cont'd)

5.7 Rates and Charges (Cont'd)

5.7.10 High Capacity Digital DS3 (44.736 Mbps) Facilities - Three System ##

(A) Protected DS3 - With Telephone Company Electronics (Cont')

Each Additional Special Access Line - Maximum of 2 (IC CDL)

Jurisdiction	Nonrecurring Charge
All States	$1,000.00

Jurisdiction	Month to Month Rate###	One Year # Monthly Rate	Three Year # Monthly Rate	Five Year # Monthly Rate	Seven Year # Monthly Rate	(C)
California-WC						
Competitive	$1,955.25	$1,955.25	$1,765.50	$1,369.50	$1,072.50	
Price Cap	1,777.50	1,777.50	1,605.00	1,245.00	975.00	
Illinois						
All Price Bands	1,110.00	1,110.00	930.00	831.00	780.00	
Indiana						
Price Band A	1,193.30	1,193.30	976.50	851.80	780.00	
Price Band B	1,221.00	1,221.00	999.80	872.60	799.50	
Price Band C	1,248.80	1,248.80	1,023.00	893.40	819.00	
Michigan						
Competitive	1,221.00	1,221.00	1,023.00	914.10	858.00	
Price Cap	1,110.00	1,110.00	930.00	831.00	780.00	

Service availability limited. Refer to # footnote on Page 5-80

Service Offer is limited. See footnote on page 5-326

Service Offer is limited further. See footnote on page 5-326 (N)

© 2022 Frontier Communications Parent, Inc. All rights reserved

5. SPECIAL ACCESS (Cont'd)

5.7 Rates and Charges (Cont'd)

5.7.10 High Capacity Digital DS3 (44.736 Mbps) Facilities - Three System ##

(A) Protected DS3 - With Telephone Company Electronics (Cont')

Each Additional Special Access Line - Maximum of 2 (IC CDL)

Jurisdiction	Month To Month Rate###	One Year # Monthly Rate	Three Year # Monthly Rate	Five Year # Monthly Rate	Seven Year # Monthly Rate	(C)
N Carolina						
Price Band A	$1,193.30	$1,193.30	$ 976.50	$ 851.80	$780.00	
Price Band B	1,221.00	1,221.00	999.80	872.60	799.50	
Price Band C	1,248.80	1,248.80	1,023.00	893.40	819.00	
Ohio						
Price Band A	1,193.30	1,193.30	976.50	851.80	780.00	
Price Band B	1,221.00	1,221.00	999.80	872.60	799.50	
Price Band C	1,248.80	1,248.80	1,023.00	893.40	819.00	
S Carolina						
Competitive	1,221.00	1,221.00	1,023.00	914.10	858.00	
Wisconsin						
Competitive	1,154.78	1,154.78	967.52	864.52	811.47	

#Service availability limited. Refer to # footnote on Page 5-80

Service Offer is limited. See footnote on page 5-326

Service Offer is limited further. See footnote on page 5-326 (N)

© 2022 Frontier Communications Parent, Inc. All rights reserved

5. SPECIAL ACCESS (Cont'd)

5.7 Rates and Charges (Cont'd)

5.7.10 High Capacity Digital DS3 (44.736 Mbps) Facilities - Three System (Cont'd) ##

(A) Protected DS3 - Without Telephone Company Electronics

First Special Access Line (Secondary CDL)

Jurisdiction	Nonrecurring Charge
All States	$2,343.75

	Month to Month Rate###	One Year # Monthly Rate	Three Year # Monthly Rate	Five Year # Monthly Rate	Seven Year # Monthly Rate	
California-WC						
Competitive	$2,019.60	$2,019.60	$1,828.20	$1,344.20	$1,104.40	
Illinois						
All Price Bands	1,133.00	1,133.00	954.00	840.00	790.75	
Indiana						
Price Band A	1,218.00	1,218.00	1,001.70	861.00	790.75	
Price Band B	1,246.30	1,246.30	1,025.60	882.00	810.60	
Price Band C	1,274.70	1,274.70	1,049.40	903.00	830.30	
Michigan						
Competitive	1,246.30	1,246.30	1,049.40	924.00	869.83	

(C)

#Service availability limited. Refer to # footnote on Page 5-80

Service Offer is limited. See footnote on page 5-326

Service Offer is limited further. See footnote on page 5-326 (N)

© 2022 Frontier Communications Parent, Inc. All rights reserved

5. SPECIAL ACCESS (Cont'd)

5.7 Rates and Charges (Cont'd)

5.7.10 High Capacity Digital DS3 (44.736 Mbps) Facilities - Three System (Cont'd) ##

(A) Protected DS3 - Without Telephone Company Electronics

First Special Access Line (Secondary CDL)

Jurisdiction	Month to Month Rate###	One Year # Monthly Rate	Three Year # Monthly Rate	Five Year # Monthly Rate	Seven Year # Monthly Rate	(C)
N Carolina						
Competitive	$1,246.30	$1,246.30	$1,049.40	$924.00	$869.83	
Ohio						
Price Band A	1,218.00	1,218.00	1,001.70	861.00	790.75	
Price Band B	1,246.30	1,246.30	1,025.60	882.00	810.60	
Price Band C	1,274.70	1,274.70	1,049.40	903.00	830.30	
S Carolina						
Competitive	1,246.30	1,246.30	1,049.40	924.00	869.83	
Wisconsin						
Competitive	1,178.71	1,178.71	992.49	873.88	822.65	

Service availability limited. Refer to # footnote on Page 5-80

Service Offer is limited. See footnote on page 5-326

Service Offer is limited further. See footnote on page 5-326 (N)

© 2022 Frontier Communications Parent, Inc. All rights reserved

5. SPECIAL ACCESS (Cont'd)

5.7 Rates and Charges (Cont'd)

5.7.10 High Capacity Digital DS3 (44.736 Mbps) Facilities - Three System (Cont'd) ##

(A) Protected DS3 - Without Telephone Company Electronics

First Special Access Line (IC CDL)

Jurisdiction	Nonrecurring Charge
All States	$1,875.00

Jurisdiction	Month to Month Rate###	One Year # Monthly Rate	Three Year # Monthly Rate	Five Year # Monthly Rate	Seven Year # Monthly Rate	(C)
California-WC						
Competitive	$2,019.60	$2,019.60	$1,828.20	$1,344.20	$1,104.40	
Price Cap	1,836.00	1,836.00	1,662.00	1,222.00	1,004.00	
Illinois						
All Price Bands	1,133.00	1,133.00	954.00	840.00	790.75	
Indiana						
Price Band A	1,218.00	1,218.00	1,001.70	861.00	790.75	
Price Band B	1,246.30	1,246.30	1,025.60	882.00	810.60	
Price Band C	1,274.70	1,274.70	1,049.40	903.00	830.30	
Michigan						
Competitive	1,246.30	1,246.30	1,049.40	924.00	869.83	
Price Cap	1,133.00	1,133.00	954.00	840.00	790.75	

Service availability limited. Refer to # footnote on Page 5-80

Service Offer is limited. See footnote on page 5-326

Service Offer is limited further. See footnote on page 5-326 (N)

© 2022 Frontier Communications Parent, Inc. All rights reserved

5. SPECIAL ACCESS (Cont'd)

5.7 Rates and Charges (Cont'd)

5.7.10 High Capacity Digital DS3 (44.736 Mbps) Facilities - Three System (Cont'd) ##

(A) Protected DS3 - Without Telephone Company Electronics

First Special Access Line (IC CDL)

Jurisdiction	Month to Month Rate###	One Year # Monthly Rate	Three Year # Monthly Rate	Five Year # Monthly Rate	Seven Year # Monthly Rate	(C)
N Carolina						
Price Band A	$1,218.00	$1,218.00	$1,001.70	$ 861.00	$ 790.75	
Price Band B	1,246.30	1,246.30	1,025.60	882.00	810.60	
Price Band C	1,274.70	1,274.70	1,049.40	903.00	830.30	
Ohio						
Price Band A	1,218.00	1,218.00	1,001.70	861.00	790.75	
Price Band B	1,246.30	1,246.30	1,025.60	882.00	810.60	
Price Band C	1,274.70	1,274.70	1,049.40	903.00	830.30	
S Carolina						
Competitive	1,246.30	1,246.30	1,049.40	924.00	869.83	
Price Cap	1,133.00	1,133.00	954.00	840.00	790.75	
Wisconsin						
Competitive	1,178.71	1,178.71	992.49	873.88	822.65	
Price Cap	1,071.55	1,071.55	902.26	794.44	747.86	

#Service availability limited. Refer to # footnote on Page 5-80

Service Offer is limited. See footnote on page 5-326

Service Offer is limited further. See footnote on page 5-326 (N)

© 2022 Frontier Communications Parent, Inc. All rights reserved

5. SPECIAL ACCESS (Cont'd)

5.7 Rates and Charges (Cont'd)

5.7.10 High Capacity Digital DS3 (44.736 Mbps) Facilities - Three System (Cont'd) ##

(A) Protected DS3 - Without Telephone Company Electronics (Cont'd)

Each Additional Special Access Line - Maximum of 2 (Secondary CDL)

Jurisdiction	Nonrecurring Charge
All States	$ 937.50

Jurisdiction	Month to Month Rate###	One Year # Monthly Rate	Three Year # Monthly Rate	Five Year # Monthly Rate	Seven Year # Monthly Rate	(C)
California-WC						
Competitive	$1,514.70	$1,514.70	$1,371.15	$1,008.15	$828.30	
Illinois						
All Price Bands	849.75	849.75	715.50	630.00	593.00	
Indiana						
Price Band A	913.50	913.50	751.30	645.80	593.00	
Price Band B	934.80	934.80	769.20	661.50	607.90	
Price Band C	956.00	956.00	787.10	677.30	622.70	
Michigan						
Competitive	934.73	934.73	787.05	693.00	652.30	

Service availability limited. Refer to # footnote on Page 5-80

Service Offer is limited. See footnote on page 5-326

Service Offer is limited further. See footnote on page 5-326 (N)

© 2022 Frontier Communications Parent, Inc. All rights reserved

5. SPECIAL ACCESS (Cont'd)

5.7 Rates and Charges (Cont'd)

5.7.10 High Capacity Digital DS3 (44.736 Mbps) Facilities - Three System (Cont'd) ##

(A) Protected DS3 - Without Telephone Company Electronics (Cont'd)

Each Additional Special Access Line - Maximum of 2 (Secondary CDL)

Jurisdiction	Month to Month Rate###	One Year # Monthly Rate	Three Year # Monthly Rate	Five Year # Monthly Rate	Seven Year # Monthly Rate	(C)
N Carolina						
Competitive	$934.73	$934.73	$787.05	$693.00	$652.30	
Ohio						
Price Band A	913.50	913.50	751.30	645.80	593.00	
Price Band B	934.80	934.80	769.20	661.50	607.90	
Price Band C	956.00	956.00	787.10	677.30	622.70	
S Carolina						
Competitive	934.73	934.73	787.05	693.00	652.30	
Wisconsin						
Competitive	884.03	884.03	744.37	655.41	616.92	

#Service availability limited. Refer to # footnote on Page 5-80

Service Offer is limited. See footnote on page 5-326

Service Offer is limited further. See footnote on page 5-326 (N)

© 2022 Frontier Communications Parent, Inc. All rights reserved

5. SPECIAL ACCESS (Cont'd)

5.7 Rates and Charges (Cont'd)

5.7.10 High Capacity Digital DS3 (44.736 Mbps) Facilities - Three System (Cont'd) ##

(A) Protected DS3 - Without Telephone Company Electronics (Cont'd)

Each Additional Special Access Line - Maximum of 2 (IC CDL)

Jurisdiction	Nonrecurring Charge
All States	$ 750.00

Jurisdiction	Month to Month Rate###	One Year # Monthly Rate	Three Year # Monthly Rate	Five Year # Monthly Rate	Seven Year # Monthly Rate	(C)
California-WC						
Competitive	$1,514.70	$1,514.70	$1,371.15	$1,008.15	$828.30	
Price Cap	1,377.00	1,377.00	1,246.50	916.50	753.00	
Illinois						
All Price Bands	849.75	849.75	715.50	630.00	593.00	
Indiana						
Price Band A	913.50	913.50	751.30	645.80	593.00	
Price Band B	934.80	934.80	769.20	661.50	607.90	
Price Band C	956.00	956.00	787.10	677.30	622.70	
Michigan						
Competitive	934.73	934.73	787.05	693.00	652.30	
Price Cap	849.75	849.75	715.50	630.00	593.00	

Service availability limited. Refer to # footnote on Page 5-80

Service Offer is limited. See footnote on page 5-326

Service Offer is limited further. See footnote on page 5-326 (N)

© 2022 Frontier Communications Parent, Inc. All rights reserved

5. SPECIAL ACCESS (Cont'd)

5.7 Rates and Charges (Cont'd)

5.7.10 High Capacity Digital DS3 (44.736 Mbps) Facilities - Three System (Cont'd) ##

(A) Protected DS3 - Without Telephone Company Electronics (Cont'd)

Each Additional Special Access Line - Maximum of 2 (IC CDL)

Jurisdiction	Month to Month Rate###	One Year # Monthly Rate	Three Year # Monthly Rate	Five Year # Monthly Rate	Seven Year # Monthly Rate	(C)
N Carolina						
Price Band A	$913.50	$913.50	$751.30	$645.80	$593.00	
Price Band B	934.80	934.80	769.20	661.50	607.90	
Price Band C	956.00	956.00	787.10	677.30	622.70	
Ohio						
Price Band A	913.50	913.50	751.30	645.80	593.00	
Price Band B	934.80	934.80	769.20	661.50	607.90	
Price Band C	956.00	956.00	787.10	677.30	622.70	
S Carolina						
Competitive	934.73	934.73	787.05	693.00	652.30	
Price Cap	849.75	849.75	715.50	630.00	593.00	
Wisconsin						
Competitive	884.03	884.03	744.37	655.41	616.92	
Price Cap	803.66	803.66	676.70	595.83	560.84	

Service availability limited. Refer to # footnote on Page 5-80

Service Offer is limited. See footnote on page 5-326

Service Offer is limited further. See footnote on page 5-326 (N)

© 2022 Frontier Communications Parent, Inc. All rights reserved

5. SPECIAL ACCESS (Cont'd)

5.7 Rates and Charges (Cont'd)

5.7.11 High Capacity Digital DS3 (44.736 Mbps) Facilities - Unlimited System##

(A) Protected DS3 - With Telephone Company Electronics

First Special Access Line (Secondary CDL)

Jurisdiction	Nonrecurring	
All States	$53,596.35	(C)

Jurisdiction	Month To Month Rate###	One Year # Monthly Rate	Three Year # Monthly Rate	Five Year # Monthly Rate	Seven Year # Monthly Rate	(C)
California-WC Competitive	$67,830.89	$67,830.89	$57,750.65	$52,250.76	$47,665.29	
Illinois All Price Bands	40,418.80	40,418.80	34,356.46	30,988.21	27,619.97	
Indiana All Price Bands	45,471.63	45,471.63	37,792.79	33,312.64	29,001.06	
Michigan Competitive	44,460.66	44,460.66	37,792.12	34,087.11	30,382.05	(C)

Service availability limited. Refer to # footnote on Page 5-80.

Service Offer is limited. See footnote on page 5-326

Effective July 26, 2022 any Unlimited System DS3 Service billing at the Month to Month rate will convert to the DS3 Individual System Month to Month rate. In addition, at the expiration of a service period, any Unlimited System DS3 service will convert to the Individual System Month to Month rate.

© 2024 Frontier Communications Parent, Inc. All rights reserved

5. SPECIAL ACCESS (Cont'd)

5.7 Rates and Charges (Cont'd)

5.7.11 High Capacity Digital DS3 (44.736 Mbps) Facilities - Unlimited System##

(A) Protected DS3 - With Telephone Company Electronics

First Special Access Line (Secondary CDL)

Jurisdiction	Month To Month Rate###	One Year # Monthly Rate	Three Year # Monthly Rate	Five Year # Monthly Rate	Seven Year # Monthly Rate	(C)
N Carolina						
Competitive	$44,460.66	$44,460.66	$37,792.12	$34,087.11	$30,382.05	
Ohio						
All Price Bands	45,471.63	45,471.63	37,792.79	33,312.64	29,001.06	
S Carolina						
Competitive	44,460.66	44,460.66	37,792.12	34,087.11	30,382.05	
Wisconsin						
Competitive	42,049.23	42,049.23	35,742.42	32,238.32	28,734.13	(C)

##Service availability limited. Refer to # footnote on Page 5-80.

Service Offer is limited. See footnote on page 5-326

Service Offer is limited further. See footnote on page 5-342

© 2024 Frontier Communications Parent, Inc. All rights reserved

5. SPECIAL ACCESS (Cont'd)

5.7 Rates and Charges (Cont'd)

5.7.11 High Capacity Digital DS3 (44.736 Mbps) Facilities - Unlimited System##

(A) Protected DS3 - With Telephone Company Electronics

First Special Access Line (IC CDL)

Jurisdiction	Nonrecurring Charge	
All States	$42,877.08	(C)

Jurisdiction	Month to Month Rate###	One Year # Monthly Rate	Three Year # Monthly Rate	Five Year # Monthly Rate	Seven Year # Monthly Rate	(C)
California-WC						
Competitive	$67,830.89	$67,830.89	$57,750.65	$52,250.76	$47,665.29	
Price Cap	61,664.37	61,664.37	52,500.56	47,500.64	43,332.02	
Illinois						
All Price Bands	40,418.80	40,418.80	34,356.46	30,988.21	27,619.97	
Indiana						
All Price Bands	45,471.63	45,471.63	37,792.79	33,312.64	29,001.06	
Michigan						
Competitive	44,460.66	44,460.66	37,792.12	34,087.11	30,382.05	
Price Cap	40,418.80	40,418.80	34,356.46	30,988.21	27,619.97	(C)

##Service availability limited. Refer to ## footnote on Page 5-80.

Service Offer is limited. See footnote on page 5-326

Service Offer is limited further. See footnote on page 5-342

© 2024 Frontier Communications Parent, Inc. All rights reserved

5. SPECIAL ACCESS (Cont'd)

5.7 Rates and Charges (Cont'd)

5.7.11 High Capacity Digital DS3 (44.736 Mbps) Facilities - Unlimited System##

(A) Protected DS3 - With Telephone Company Electronics

First Special Access Line (IC CDL)

Jurisdiction	Month To Month Rate###	One Year # Monthly Rate	Three Year # Monthly Rate	Five Year # Monthly Rate	Seven Year # Monthly Rate	(C)
N Carolina						
All Price Bands	$45,471.63	$45,471.63	$37,792.79	$33,312.64	$29,001.06	
Ohio						
All Price Bands	45,471.63	45,471.63	37,792.79	33,312.64	29,001.06	
S Carolina						
Competitive	44,460.66	44,460.66	37,792.12	34,087.11	30,382.05	
Price Cap	40,418.80	40,418.80	34,356.46	30,988.21	27,619.97	
Wisconsin						
Competitive	42,049.23	42,049.23	35,742.42	32,238.32	28,734.13	
Price Cap	38,226.63	38,226.63	32,493.10	29,307.51	26,121.96	

(C)

##Service availability limited. Refer to ## footnote on Page 5-80.

Service Offer is limited. See footnote on page 5-326

Service Offer is limited further. See footnote on page 5-342

© 2024 Frontier Communications Parent, Inc. All rights reserved

5. SPECIAL ACCESS (Cont'd)

5.7 Rates and Charges (Cont'd)

5.7.11 High Capacity Digital DS3 (44.736 Mbps) Facilities - Unlimited System## (Cont'd)

(A) Protected DS3 - With Telephone Company Electronics (Cont'd)

Each Additional Special Access Line (Secondary CDL)

Jurisdiction	Nonrecurring	
All States	$11,910.29	(C)

Jurisdiction	Month To Month Rate###	One Year # Monthly Rate	Three Year # Monthly Rate	Five Year # Monthly Rate	Seven Year # Monthly Rate	(C)
California-WC						
Competitive	$8,384.88	$8,384.88	$7,627.65	$5,966.38	$4,320.86	
Illinois						
All Price Bands	4,287.69	4,287.69	3,775.57	3,477.79	3,249.11	
Indiana						
All Price Bands	4,824.20	4,824.20	4,153.34	3,738.88	3,412.06	
Michigan						
Competitive	4,716.50	4,716.50	4,153.19	3,825.60	3,574.02	

(C)

##Service availability limited. Refer to ## footnote on Page 5-80.

Service Offer is limited. See footnote on page 5-326

Service Offer is limited further. See footnote on page 5-342

© 2024 Frontier Communications Parent, Inc. All rights reserved

5. SPECIAL ACCESS (Cont'd)

5.7 Rates and Charges (Cont'd)

5.7.11 High Capacity Digital DS3 (44.736 Mbps) Facilities - Unlimited System## (Cont'd)

(A) Protected DS3 - With Telephone Company Electronics (Cont'd)

Each Additional Special Access Line (Secondary CDL)

Jurisdiction	Month To Month Rate###	One Year # Monthly Rate	Three Year # Monthly Rate	Five Year # Monthly Rate	Seven Year # Monthly Rate	(C)
N Carolina						
Competitive	$4,716.50	$4,716.50	$4,153.19	$3,825.60	$3,574.02	
Ohio						
All Price Bands	4,824.20	4,824.20	4,153.34	3,738.88	3,412.06	
S Carolina						
Competitive	4,716.50	4,716.50	4,153.19	3,825.60	3,574.02	
Wisconsin						
Competitive	4,460.67	4,460.67	3,927.93	3,618.16	3,380.22	(C)

Service availability limited. Refer to # footnote on Page 5-80.

Service Offer is limited. See footnote on page 5-326

Service Offer is limited further. See footnote on page 5-342

© 2024 Frontier Communications Parent, Inc. All rights reserved

5. SPECIAL ACCESS (Cont'd)

5.7 Rates and Charges (Cont'd)

5.7.11 High Capacity Digital DS3 (44.736 Mbps) Facilities - Unlimited System## (Cont'd)

(A) Protected DS3 - With Telephone Company Electronics (Cont'd)

Each Additional Special Access Line (IC CDL)

Jurisdiction	Nonrecurring Charge	
All States	$9,528.25	(C)

Jurisdiction	Month To Month Rate###	One Year # Monthly Rate	Three Year # Monthly Rate	Five Year # Monthly Rate	Seven Year # Monthly Rate	(C)
California-WC						
Competitive	$8,384.88	$8,384.88	$7,627.65	$5,966.38	$4,320.86	
Price Cap	7,622.63	7,622.63	6,934.17	5,423.94	3,928.01	
Illinois						
All Price Bands	4,287.69	4,287.69	3,775.57	3,477.79	3,249.11	
Indiana						
All Price Bands	4,824.20	4,824.20	4,153.34	3,738.88	3,412.06	
Michigan						
Competitive	4,716.50	4,716.50	4,153.19	3,825.60	3,574.02	
Price Cap	4,287.69	4,287.69	3,775.57	3,477.79	3,249.11	

(C)

Service availability limited. Refer to # footnote on Page 5-80.

Service Offer is limited. See footnote on page 5-326

Service Offer is limited further. See footnote on page 5-342

© 2024 Frontier Communications Parent, Inc. All rights reserved

5. SPECIAL ACCESS (Cont'd)

5.7 Rates and Charges (Cont'd)

5.7.11 High Capacity Digital DS3 (44.736 Mbps) Facilities - Unlimited System## (Cont'd)

(A) Protected DS3 - With Telephone Company Electronics (Cont'd)

Each Additional Special Access Line (IC CDL)

Jurisdiction	Month To Month Rate###	One Year # Monthly Rate	Three Year # Monthly Rate	Five Year # Monthly Rate	Seven Year # Monthly Rate	
N Carolina						
All Price Bands	$4,824.20	$4,824.20	$4,153.34	$3,738.88	$3,412.06	(C)
Ohio						
All Price Bands	4,824.20	4,824.20	4,153.34	3,738.88	3,412.06	
S Carolina						
Competitive	4,716.50	4,716.50	4,153.19	3,825.60	3,574.02	
Price Cap	4,287.69	4,287.69	3,775.57	3,477.79	3,249.11	
Wisconsin						
Competitive	4,460.67	4,460.67	3,927.93	3,618.16	3,380.22	
Price Cap	4,055.14	4,055.14	3,570.79	3,289.25	3,072.96	(C)

Service availability limited. Refer to # footnote on Page 5-80.

Service Offer is limited. See footnote on page 5-326

Service Offer is limited further. See footnote on page 5-342

© 2024 Frontier Communications Parent, Inc. All rights reserved

5. SPECIAL ACCESS (Cont'd)

5.7 Rates and Charges (Cont'd)

5.7.11 High Capacity Digital DS3 (44.736 Mbps) Facilities - Unlimited System ## (Cont'd)

(A) Protected DS3 - Without Telephone Company Electronics

First Special Access Line (Secondary CDL)

Jurisdiction	Nonrecurring	
All States	$40,197.25	(C)

Jurisdiction	Month To Month Rate###	One Year # Monthly Rate	Three Year # Monthly Rate	Five Year # Monthly Rate	Seven Year # Monthly Rate	
California-WC Competitive	$46,171.77	$46,171.77	$39,306.64	35,564.91	$32,444.12	(C)
Illinois All Price Bands	27,510.44	27,510.44	23,384.67	21,093.14	18,799.22	
Indiana All Price Bands	30,952.52	30,952.52	25,723.37	22,675.30	19,739.65	
Michigan Competitive	30,261.55	30,261.55	25,723.21	23,202.48	20,679.15	(C)

Service availability limited. Refer to # footnote on Page 5-80.

Service Offer is limited. See footnote on page 5-326

Service Offer is limited further. See footnote on page 5-342

© 2024 Frontier Communications Parent, Inc. All rights reserved

5. SPECIAL ACCESS (Cont'd)

5.7 Rates and Charges (Cont'd)

5.7.11 High Capacity Digital DS3 (44.736 Mbps) Facilities - Unlimited System ##(Cont'd)

(A) Protected DS3 - Without Telephone Company Electronics

First Special Access Line (Secondary CDL)

Jurisdiction	Month To Month Rate###	One Year # Monthly Rate	Three Year # Monthly Rate	Five Year # Monthly Rate	Seven Year # Monthly Rate	
N Carolina						(C)
Competitive	$30,261.55	$30,261.55	$25,723.21	$23,202.48	$20,679.15	
Ohio						
All Price Bands	30,952.52	30,952.52	25,723.37	22,675.30	19,739.65	
S Carolina						
Competitive	30,261.55	30,261.55	25,723.21	23,202.48	20,679.15	
Wisconsin						
Competitive	28,620.27	28,620.27	24,327.97	21,944.01	19,557.56	(C)

#Service availability limited. Refer to # footnote on Page 5-80.

Service Offer is limited. See footnote on page 5-326

Service Offer is limited further. See footnote on page 5-342

© 2024 Frontier Communications Parent, Inc. All rights reserved

5. SPECIAL ACCESS (Cont'd)

5.7 Rates and Charges (Cont'd)

5.7.11 High Capacity Digital DS3 (44.736 Mbps) Facilities - Unlimited System ## (Cont'd)

(A) Protected DS3 - Without Telephone Company Electronics

First Special Access Line (IC CDL)

Jurdistiction	Nonrecurring Charge	
All States	$32,157.80	(C)

Jurisdiction	Month To Month Rate###	One Year # Monthly Rate	Three Year # Monthly Rate	Five Year # Monthly Rate	Seven Year # Monthly Rate	
California-WC						(C)
Competitive	$46,171.77	$46,171.77	$39,306.64	$35,564.91	$32,444.12	
Price Cap	41,974.28	41,974.28	35,733.30	32,331.69	29,494.65	
Illinois						
All Price Bands	27,510.44	27,510.44	23,384.67	21,093.14	18,799.22	
Indiana						
All Price Bands	30,952.52	30,952.52	25,723.37	22,675.30	19,739.65	
Michigan						
Competitive	30,261.55	30,261.55	25,723.21	23,202.48	20,679.15	(C)
Price Cap	27,510.41	27,510.41	23,384.67	21,093.14	18,799.22	

#Service availability limited. Refer to # footnote on Page 5-80.

Service Offer is limited. See footnote on page 5-326

Service Offer is limited further. See footnote on page 5-342

© 2024 Frontier Communications Parent, Inc. All rights reserved

5. SPECIAL ACCESS (Cont'd)

5.7 Rates and Charges (Cont'd)

5.7.11 High Capacity Digital DS3 (44.736 Mbps) Facilities - Unlimited System ## (Cont'd)

(A) Protected DS3 - Without Telephone Company Electronics

First Special Access Line (IC CDL)

Jurisdiction	Month To Month Rate###	One Year # Monthly Rate	Three Year # Monthly Rate	Five Year # Monthly Rate	Seven Year # Monthly Rate	
N Carolina						
All Price Bands	$30,952.52	30,952.52	$25,723.37	22,675.30	$19,739.65	(C)
Ohio						
All Price Bands	30,952.52	30,952.52	25,723.37	22,675.30	19,739.65	
S Carolina						
Competitive	30,261.48	30,261.48	25,723.21	23,202.48	20,679.15	
Price Cap	41,974.28	41,974.28	35,733.30	32,331.69	29,494.65	
Wisconsin						
Competitive	28,620.27	28,620.27	24,327.97	21,944.01	19,557.56	
Price Cap	26,018.43	26,018.43	22,116.39	19,949.09	17,779.59	(C)

#Service availability limited. Refer to # footnote on Page 5-80.

Service Offer is limited. See footnote on page 5-326

Service Offer is limited further. See footnote on page 5-342

© 2024 Frontier Communications Parent, Inc. All rights reserved

5. SPECIAL ACCESS (Cont'd)

5.7 Rates and Charges (Cont'd)

5.7.11 High Capacity Digital DS3 (44.736 Mbps) Facilities - Unlimited System ## (Cont'd)

(A) Protected DS3 - Without Telephone Company Electronics (Cont'd)

Each Additional Special Access Line (Secondary CDL)

Jurisdiction	Nonrecurring Charge	
All States	$8,932.73	(C)

Jurisdiction	Month to Month Rate###	One Year # Monthly Rate	Three Year # Monthly Rate	Five Year # Monthly Rate	Seven Year # Monthly Rate	
California-WC	$8,091.39	$8,091.39	$7,397.06	$5,706.95	$4,271.05	(C)
Illinois						
All Price Bands	4,163.86	4,163.86	3,723.18	3,170.53	2,996.62	
Indiana						
All Price Bands	4,685.04	4,685.04	4,096.18	3,409.22	3,147.19	
Michigan						
Competitive	4,580.25	4,580.25	4,095.50	3,487.62	3,296.31	(C)

Service availability limited. Refer to # footnote on Page 5-80.

Service Offer is limited. See footnote on page 5-326

Service Offer is limited further. See footnote on page 5-342

© 2024 Frontier Communications Parent, Inc. All rights reserved

5. SPECIAL ACCESS (Cont'd)

5.7 Rates and Charges (Cont'd)

5.7.11 High Capacity Digital DS3 (44.736 Mbps) Facilities - Unlimited System# (Cont'd)

(A) Protected DS3 - Without Telephone Company Electronics (Cont'd)

Each Additional Special Access Line (Secondary CDL)

Jurisdiction	Month To Month Rate###	One Year # Monthly Rate	Three Year # Monthly Rate	Five Year # Monthly Rate	Seven Year # Monthly Rate	
N Carolina						
Competitive	$4,580.25	$4,580.25	$4,095.50	3,487.62	$3,296.31	(C)
Ohio						
All Price Bands	4,685.04	4,685.04	4,096.18	3,409.22	3,147.19	
S Carolina						
Competitive	4,580.25	4,580.25	4,095.50	3,487.62	3,296.31	
Wisconsin						
Competitive	4,331.83	4,331.83	3,873.42	3,298.48	3,117.46	(C)

##Service availability limited. Refer to # footnote on Page 5-80.

Service Offer is limited. See footnote on page 5-326

Service Offer is limited further. See footnote on page 5-342

© 2024 Frontier Communications Parent, Inc. All rights reserved

5. SPECIAL ACCESS (Cont'd)

5.7 Rates and Charges (Cont'd)

5.7.11 High Capacity Digital DS3 (44.736 Mbps) Facilities - Unlimited System ## (Cont'd)

(A) Protected DS3 - Without Telephone Company Electronics (Cont'd)

Each Additional Special Access Line (IC CDL)

Jurisdiction	Nonrecurring Charge	
All States	$7,146.18	(C)

Jurisdiction	Month To Month Rate###	One Year # Monthly Rate	Three Year # Monthly Rate	Five Year # Monthly Rate	Seven Year # Monthly Rate	
California-WC						(C)
Competitive	$8,091.39	$8,091.39	$7,397.06	$5,706.95	$4,271.05	
Price Cap	7,355.80	7,355.80	6,724.58	5,188.12	3,882.74	
Illinois						
All Price Bands	4,163.86	4,163.86	3,723.18	3,170.53	2,996.62	
Indiana						
All Price Bands	4,685.04	4,685.04	4,096.18	3,409.22	3,147.19	
Michigan						
Competitive	4,580.25	4,580.25	4,095.50	3,487.62	3,296.31	(C)
Price Cap	4,163.86	4,163.86	3,723.18	3,170.53	2,996.62	

#Service availability limited. Refer to # footnote on Page 5-80.

Service Offer is limited. See footnote on page 5-326

Service Offer is limited further. See footnote on page 5-342

© 2024 Frontier Communications Parent, Inc. All rights reserved

5. SPECIAL ACCESS (Cont'd)

5.7 Rates and Charges (Cont'd)

5.7.11 High Capacity Digital DS3 (44.736 Mbps) Facilities - Unlimited System ## (Cont'd)

(A) Protected DS3 - Without Telephone Company Electronics (Cont'd)

Each Additional Special Access Line (IC CDL)

Jurisdiction	Month To Month Rate###	One Year # Monthly Rate	Three Year # Monthly Rate	Five Year # Monthly Rate	Seven Year # Monthly Rate	
N Carolina						
All Price Bands	$4,685.04	$4,685.04	$4,096.18	$3,409.22	$3,147.19	(C)
Ohio						
All Price Bands	4,685.04	4,685.04	4,096.18	3,409.22	3,147.19	
S Carolina						
Competitive	4,580.25	4,580.25	4,095.50	3,487.62	3,296.31	
Price Cap	4,163.86	4,163.86	3,723.18	3,170.53	2,996.62	
Wisconsin						
Competitive	4,331.83	4,331.83	3,873.42	3,298.48	3,117.46	
Price Cap	3,938.06	3,938.06	3,521.27	2,998.63	2,834.08	(C)

Service availability limited. Refer to # footnote on Page 5-80.

Service Offer is limited. See footnote on page 5-326

Service Offer is limited further. See footnote on page 5-342

© 2024 Frontier Communications Parent, Inc. All rights reserved

5. SPECIAL ACCESS (Cont'd)

5.7 Rates and Charges (Cont'd)

5.7.12 High Capacity Digital DS3 (44.736 Mbps) Facilities - Individual System #

(A) Protected DS3 Individual - With Telephone Company Electronics

Each Special Access Line (Secondary CDL) Competitive

Jurisdiction	Nonrecurring Charge	
All States	$19,689.22	(C)

Jurisdiction	Month To Month Rate###	One Year # Monthly Rate	Three Year # Monthly Rate	Five Year # Monthly Rate	Seven Year # Monthly Rate	
California-WC	$30,321.41	$30,321.41	$23,278.20	$20,202.71	$17,395.82	(C)
Illinois	18,901.63	18,901.63	15,751.38	14,018.71	12,679.85	
Indiana All Price Bands	21,264.36	21,264.36	17,326.49	15,070.89	13,314.70	
Michigan	19,492.41	19,492.41	16,460.21	14,294.43	13,774.63	
North Carolina	19,492.41	19,492.41	16,460.21	14,294.43	13,774.63	
Ohio All Price Bands	21,264.36	21,264.36	17,326.49	15,070.89	13,314.70	
S Carolina	20,791.80	20,791.80	17,326.49	15,420.62	13,947.92	
Wisconsin	19,664.14	19,664.14	16,386.79	14,625.09	13,191.30	(C)

Effective November 19, 2021, DS3 Term Rates are no longer permitted. DS3 Term Rates in effect as of November 19, 2021 may continue the existing term but will not be eligible to extend, renew, reenroll in, convert to a new term period, or in any other way continue their existing plan beyond its current expiration. At expiration of the term the service will convert to the Month to Month Rate. If at any time an existing customer terminates its DS3 Term Rates, the customer may not re-subscribe to the rate.

Effective July 26, 2022 any DS3 Service billing at the Month to Month rate will convert to the DS3 Individual System Month to Month rate. In addition, at the expiration of any DS3 service period the DS3 service will convert to the Individual System Month to Month rate.

© 2024 Frontier Communications Parent, Inc. All rights reserved.

5. SPECIAL ACCESS (Cont'd)

5.7 Rates and Charges (Cont'd)

5.7.12 High Capacity Digital DS3 (44.736 Mbps) Facilities - Individual System (Cont'd) ##

(A) Protected DS3 Individual - With Telephone Company Electronics (Cont'd)

Jurisdiction	Nonrecurring Charge	
All States	$15,751.44	(C)

Each Special Access Line (IC CDL)

Jurisdiction	Month To Month Rate###	One Year # Monthly Rate	Three Year # Monthly Rate	Five Year # Monthly Rate	Seven Year # Monthly Rate	
California-WC	$30,321.41	$30,321.41	$23,278.20	20,202.71	$17,395.82	(C)
Illinois	18,901.63	18,901.63	15,751.38	14,018.71	12,679.85	
Indiana All Price Bands	21,264.36	21,264.36	17,326.49	15,070.89	13,314.70	
Michigan	19,492.41	19,492.41	16,460.21	14,294.43	13,774.63	
N Carolina All Price Bands	21,264.36	21,264.36	17,326.49	15,070.89	13,314.70	
Ohio All Price Bands	21,264.36	21,264.36	17,326.49	15,070.89	13,314.70	
S Carolina	20,791.80	20,791.80	17,326.49	15,420.62	13,947.92	
Wisconsin	19,664.14	19,664.14	16,386.79	14,583.98	13,191.30	(C)

Page moved from 5-360

Service Offer is limited. See footnote on page 5-358

Service Offer is limited further. See footnote on page 5-358

© 2024 Frontier Communications Parent, Inc. All rights reserved.

5. SPECIAL ACCESS (Cont'd)

5.7 Rates and Charges (Cont'd)

5.7.12 High Capacity Digital DS3 (44.736 Mbps) Facilities - Individual System (Cont'd) ##

(A) Protected DS3 Individual - Without Telephone Company Electronics

Each Special Access Line (Secondary CDL) Competitive

Jurisdiction	Nonrecirring Charge	
All States	$14,766.93	(C)

Jurisdiction	Month To Month Rate###	One Year # Monthly Rate	Three Year # Monthly Rate	Five Year # Monthly Rate	Seven Year # Monthly Rate	
California-WC	$22,741.02	$22,741.02	$17,872.33	$15,260.32	$13,064.18	(C)
Illinois	13,939.98	13,939.98	11,419.74	10,238.41	8,474.25	
Indiana All Price Bands	15,683.71	15,683.71	12,561.79	11,007.04	10,315.65	
Michigan	15,334.06	15,334.06	12,561.79	11,262.27	9,321.66	
N Carolina	15,334.06	15,334.06	12,561.79	11,262.27	9,321.66	
Ohio All Price Bands	15,683.63	15,683.63	12,561.79	11,007.04	10,315.65	
S Carolina	15,334.06	15,334.06	12,561.79	11,262.27	9,321.66	
Wisconsin	14,502.35	14,502.35	11,880.36	10,651.49	8,816.11	(C)

Moved from Page 362

Service Offer is limited. See footnote on page 5-358

Service Offer is limited further. See footnote on page 5-358

© 2024 Frontier Communications Parent, Inc. All rights reserved.

5. SPECIAL ACCESS (Cont'd)

5.7 Rates and Charges (Cont'd)

5.7.12 High Capacity Digital DS3 (44.736 Mbps) Facilities - Individual System (Cont'd) ##

(A) Protected DS3 Individual - Without Telephone Company Electronics

Each Special Access Line (IC CDL)

Jurisdiction	Nonrecurring Charge	
All States	$11,813.51	(C)

Jurisdiction	Month To Month Rate###	One Year # Monthly Rate	Three Year # Monthly Rate	Five Year # Monthly Rate	Seven Year # Monthly Rate	
California-WC	$22,741.02	$22,741.02	$17,872.33	$15,260.32	$13,064.18	(C)
Illinois	13,939.98	13,939.98	11,419.74	10,238.41	8,474.25	
Indiana All Price Bands	15,683.71	15,683.71	12,561.79	11,007.04	8,898.01	
Michigan	15,334.06	15,334.06	12,561.79	11,262.27	9,321.66	
N Carolina All Price Bands	15,683.71	15,683.71	12,561.79	11,007.04	8,898.01	
Ohio All Price Bands	15,683.71	15,683.71	12,561.79	11,007.04	8,898.01	
South Carolina	15,333.96	15,333.96	12,561.79	11,262.27	9,321.66	
Wisconsin	14,502.35	14,502.35	11,880.36	10,651.49	8,816.11	(C)

Page moved from 5-364

Service Offer is limited. See footnote on page 5-358

Service Offer is limited further. See footnote on page 5-358

© 2024 Frontier Communications Parent, Inc. All rights reserved.

5. SPECIAL ACCESS (Cont'd)

5.7 Rates and Charges (Cont'd)

5.7.12 - Reserved (M)

Page moved to 5-360

© 2022 Frontier Communications Parent, Inc. All rights reserved.

5. SPECIAL ACCESS (Cont'd)

5.7 Rates and Charges (Cont'd)

5.7.12 Reserved

© 2022 Frontier Communications Parent, Inc. All rights reserved

5. SPECIAL ACCESS (Cont'd)

5.7 Rates and Charges (Cont'd)

5.7.12 Reserved ## (M)

Page moved to 5-361

© 2021 Frontier Communications Parent, Inc. All rights reserved

5. SPECIAL ACCESS (Cont'd)

5.7 Rates and Charges (Cont'd)

5.7.12 Reserved

(M)

© 2022 Frontier Communications Parent, Inc. All rights reserved

5. SPECIAL ACCESS (Cont'd)

5.7 Rates and Charges (Cont'd)

5.7.13 High Capacity Digital DS3 (44.736 Mbps) Facilities - Group Systems##

(A) Protected DS3 x 12 - With Telephone Company Electronics##

Per Group of 12 (Secondary CDL)##

Jurisdiction	Nonrecurring Charge
All States	$8,750.00

Jurisdiction	Month to Month Rate###	One Year # Monthly Rate	Three Year # Monthly Rate	Five Year # Monthly Rate	Seven Year # Monthly Rate	(C)
All States	$8,450.00	$8,450.00	$7,000.00	$5,300.00	$4,500.00	

Limited to those services so equipped and in service as of March 4, 1999.

Effective November 19, 2021, DS3 Term Rates are no longer permitted. DS3 Term Rates in effect as of November 19, 2021 may continue the existing term but will not be eligible to extend, renew, reenroll in, convert to a new term period, or in any other way continue their existing plan beyond its current expiration. At expiration of the term, the service will convert to the Month to Month Rate. If at any time an existing customer terminates its DS3 Term Rates, the customer may not re-subscribe to the rate.

.

Effective July 26, 2022 any Group System DS3 Service billing at the Month to Month rate will convert to the DS3 Individual System Month to Month rate. In addition, at the expiration of a service period any Group System DS3 service will convert to the Individual System Month to Month rate (N)

© 2022 Frontier Communications Parent, Inc. All rights reserved

5. SPECIAL ACCESS (Cont'd)

5.7 Rates and Charges (Cont'd)

5.7.13 Reserved (C)

© 2022 Frontier Communications Parent, Inc. All rights reserved

5. SPECIAL ACCESS (Cont'd)

5.7 Rates and Charges (Cont'd)

5.7.13 High Capacity Digital DS3 (44.736 Mbps) Facilities - Group Systems##

(A) Protected DS3 x 12 - With Telephone Company Electronics##

Per Group of 12 (IC CDL)##

Jurisdiction	Nonrecurring Charge
All States	$7,000.00

Jurisdiction	Month To Month Rate###	One Year # Monthly Rate	Three Year # Monthly Rate	Five Year # Monthly Rate	Seven Year # Monthly Rate	(C)
All States	$8,450.00	$8,450.00	$7,000.00	$5,300.00	$4,500.00	

Limited to those services so equipped and in service as of March 4, 1999.

Service Offer is limited. See footnote on page 5-366

Service Offer is limited further. See footnote on page 5-366 (N)

© 2022 Frontier Communications Parent, Inc. All rights reserved

5. SPECIAL ACCESS (Cont'd)

5.7 Rates and Charges (Cont'd)

5.7.13 High Capacity Digital DS3 (44.736 Mbps) Facilities - Group Systems## (Cont'd)

(A) Protected DS3 x 12 - Without Telephone Company Electronics##

Per Group of 12 (Secondary CDL)##

Jurisdiction	Nonrecurring Charge
All States	$6,562.50

Jurisdiction	Month to Month Rate###	One Year # Monthly Rate	Three Year# Monthly Rate	Five Year# Monthly Rate	Seven Year # Monthly Rate	(C)
All States	$6,337.50	$6,337.50	$5,250.00	$3,975.00	$3,375.00	

Limited to those services so equipped and in service as of March 4, 1999.

Service Offer is limited. See footnote on page 5-366

Service Offer is limited further. See footnote on page 5-366 (N)

© 2022 Frontier Communications Parent, Inc. All rights reserved

5. SPECIAL ACCESS (Cont'd)

5.7 Rates and Charges (Cont'd)

5.7.13 High Capacity Digital DS3 (44.736 Mbps) Facilities - Group Systems## (Cont'd)

(A) Protected DS3 x 12 - Without Telephone Company Electronics##

Per Group of 12 (IC CDL)##

Jurisdiction	Nonrecurring Charge
All States	$5,250.00

Jurisdiction	Month to Month Rate###	One Year # Monthly Rate	Three Year # Monthly Rate	Five Year # Monthly Rate	Seven Year # Monthly Rate	(C)
All States	$6,377.50	$6,337.50	$5,250.00	$3,975.00	$3,375.00	

Limited to those services so equipped and in service as of March 4, 1999.

Service Offer is limited. See footnote on page 5-366

Service Offer is limited further. See footnote on page 5-366 (N)

© 2022 Frontier Communications Parent, Inc. All rights reserved

5. SPECIAL ACCESS (Cont'd)

5.7 Rates and Charges (Cont'd)

5.7.13 Reserved (C)

© 2022 Frontier Communications Parent, Inc. All rights reserved

5. SPECIAL ACCESS (Cont'd)

5.7 Rates and Charges (Cont'd)

5.7.13 High Capacity Digital DS3 (44.736 Mbps) Facilities - Group Systems## (Cont'd)

(B) Protected DS3 x 24 - With Telephone Company Electronics##

Per Group of 24 (Secondary CDL)##

Jurisdiction	Nonrecurring Charge
All States	$15,000

Jurisdiction	Month to Month Rate###	One Year# Monthly Rate	Three Year # Monthly Rate	Five Year # Monthly Rate	Seven Year # Monthly Rate	(C)
All States	$14,500.00	$14,500.00	$12,000.00	$9,000.00	$7,800.00	

Limited to those services so equipped and in service as of March 4, 1999.

Service Offer is limited. See footnote on page 5-366

Service Offer is limited further. See footnote on page 5-366 (N)

© 2022 Frontier Communications Parent, Inc. All rights reserved

5. SPECIAL ACCESS (Cont'd)

5.7 Rates and Charges (Cont'd)

5.7.13 High Capacity Digital DS3 (44.736 Mbps) Facilities - Group Systems## (Cont'd)

(B) Protected DS3 x 24 - With Telephone Company Electronics##

Per Group of 24 (IC CDL)##

Jurisdiction	Nonrecurring Charge
All State	$12,000.00

Jurisdiction	Month to Month Rate###	One Year # Monthly Rate	Three Year # Monthly Rate	Five Year # Monthly Rate	Seven Year # Monthly Rate	(C)
All States	$14,500.00	$14,500.00	$12,000.00	$9,000.00	#7,800.00	

Limited to those services so equipped and in service as of March 4, 1999.

Service Offer is limited. See footnote on page 5-366

Service Offer is limited further. See footnote on page 5-366 (N)

© 2022 Frontier Communications Parent, Inc. All rights reserved

5. SPECIAL ACCESS (Cont'd)

5.7 Rates and Charges (Cont'd)

5.7.13 Reserved (C)

© 2022 Frontier Communications Parent, Inc. All rights reserved

5. SPECIAL ACCESS (Cont'd)

5.7 Rates and Charges (Cont'd)

5.7.13 High Capacity Digital DS3 (44.736 Mbps) Facilities - Group Systems## (Cont'd)

(B) Protected DS3 x 24 - Without Telephone Company Electronics##

Per Group of 24 (Secondary CDL)##

Jurisdiction	Nonrecurring Charge
All State	$11,250.00

Jurisdiction	Month to Month Rate###	One Year Monthly Rate	Three Year Monthly Rate	Five Year Monthly Rate	Seven Year # Monthly Rate	(C)
All States	$10,875.00	$10,875.00	$9,000.00	$6,750.00	$5,850.00	

Limited to those services so equipped and in service as of March 4, 1999.

Service Offer is limited. See footnote on page 5-366

Service Offer is limited further. See footnote on page 5-366 (N)

© 2022 Frontier Communications Parent, Inc. All rights reserved

5. SPECIAL ACCESS (Cont'd)

5.7 Rates and Charges (Cont'd)

5.7.13 Reserved (C)

© 2022 Frontier Communications Parent, Inc. All rights reserved

5. SPECIAL ACCESS (Cont'd)

5.7 Rates and Charges (Cont'd)

5.7.13 High Capacity Digital DS3 (44.736 Mbps) Facilities - Group Systems## (Cont'd)

(B) Protected DS3 x 24 - Without Telephone Company Electronics##

Per Group of 24 (IC CDL)##

Jurisdiction	Nonrecurring Charge
All States	$9,000.00

Jurisdiction	Month to Month Rate###	One Year # Monthly Rate	Three Year # Monthly Rate	Five Year # Monthly Rate	Seven Year # Monthly Rate	(C)
All States	$10,875.00	$10,875.00	$9,000.00	$6,750.00	$5,850.00	

Limited to those services so equipped and in service as of March 4, 1999.

Service Offer is limited. See footnote on page 5-366

Service Offer is limited further. See footnote on page 5-366 (N)

© 2022 Frontier Communications Parent, Inc. All rights reserved

5. SPECIAL ACCESS (Cont'd)

5.7 Rates and Charges (Cont'd)

5.7.13 Reserved

© 2022 Frontier Communications Parent, Inc. All rights reserved

5. SPECIAL ACCESS (Cont'd)

5.7 Rates and Charges (Cont'd)

5.7.14 High Capacity Digital DS3 (44.736 Mbps) Facilities - Special Transport (Cont'd)

(A) DS3 Special Transport Facilities

Jurisdiction	3 System, Unlimited System, **Individual Transport** Per DS3, Per Airline Mile Monthly Rate#	12 Group System Transport Per Group of 12, Per Airline Mile Monthly Rate#	24 Group System Transport, Per Group of 24, Per Airline Mile Monthly Rate#	
California-WC	199.15	Not Available	Not Available	(C)
Illinois	531.58	Not Available	Not Available	
Indiana	348.18	Not Available	Not Available	
Michigan	551.29	Not Available	Not Available	
N Carolina	567.07	Not Available	Not Available	
Ohio	567.07	Not Available	Not Available	
S Carolina	524.31	Not Available	Not Available	
Wisconsin	400.77	Not Available	Not Available	(C)

Limited to those services so equipped and in service as of March 4, 1999.

Service availability limited. Refer to # footnote on Page 5-80.

© 2024 Frontier Communications Parent, Inc. All rights reserved

5. SPECIAL3 ACCESS (Cont'd)

5.7 Rates and Charges (Cont'd)

5.7.14 Reserved

© 2022 Frontier Communications Parent, Inc. All rights reserved

5. SPECIAL ACCESS (Cont'd)

5.7 Rates and Charges (Cont'd)

5.7.14 High Capacity Digital DS3 (44.736 Mbps) Facilities - Special Transport (Cont'd)

(B) DS3 Special Transport Terminations

Jurisdiction	3 System, Unlimited System, Individual Transport Per DS3, Per Termination Monthly Rate#	12 Group System Transport Per Group of 12, Per Termination Monthly Rate#	24 Group System Transport Per Group of 24, Per Termination Monthly Rate#	
California-WC	$2,130.41	Not Available	Not Available	(C)
Illinois	5,288.50	Not Available	Not Available	
Indiana	3,474.77	Not Available	Not Available	
Michigan	4,725.42	Not Available	Not Available	
N Carolina	4,745.14	Not Available	Not Available	
Ohio	4,725.42	Not Available	Not Available	
S Carolina	5,520.23	Not Available	Not Available	
Wisconsin	4,221.37	Not Available	Not Available	(C)

Limited to those services so equipped and in service as of March 4, 1999.

Service availability limited. Refer to # footnote on Page 5-80.

© 2024 Frontier Communications Parent, Inc. All rights reserved

5. SPECIAL ACCESS (Cont'd)

5.7 Rates and Charges (Cont'd)

5.7.14 Reserved (M)

© 2022 Frontier Communications Parent, Inc. All rights reserved

5. SPECIAL ACCESS (Cont'd)

5.7 Rates and Charges (Cont'd)

5.7.14 Reserved

© 2022 Frontier Communications Parent, Inc. All rights reserved

5. SPECIAL ACCESS (Cont'd)

5.7 Rates and Charges (Cont'd)

5.7.14 Reserved

© 2022 Frontier Communications Parent, Inc. All rights reserved

5. SPECIAL ACCESS (Cont'd)

5.7 Rates and Charges (Cont'd)

5.7.14 Reserved

© 2022 Frontier Communications Parent, Inc. All rights reserved

5. SPECIAL ACCESS (Cont'd)

5.7 Rates and Charges (Cont'd)

5.7.14 Reserved

© 2022 Frontier Communications Parent, Inc. All rights reserved

5. SPECIAL ACCESS (Cont'd)

5.7 Rates and Charges (Cont'd)

5.7.14 Reserved

© 2022 Frontier Communications Parent, Inc. All rights reserved

5. SPECIAL ACCESS (Cont'd)

5.7 Rates and Charges (Cont'd)

5.7.14 Reserved

© 2022 Frontier Communications Parent, Inc. All rights reserved

5. SPECIAL ACCESS (Cont'd)

5.7 Rates and Charges (Cont'd)

5.7.14 Reserved

© 2022 Frontier Communications Parent, Inc. All rights reserved

5. SPECIAL ACCESS (Cont'd)

5.7 Rates and Charges (Cont'd)

5.7.14 Reserved

© 2022 Frontier Communications Parent, Inc. All rights reserved

5. SPECIAL ACCESS (Cont'd)

5.7 Rates and Charges (Cont'd)

5.7.14 Reserved

© 2022 Frontier Communications Parent, Inc. All rights reserved

5. SPECIAL ACCESS (Cont'd)

5.7 Rates and Charges (Cont'd)

5.7.15 High Capacity Digital DS3 (44.736 Mbps) Facilities

DS3 Multiplexer Cross Connect Arrangement, Per Arrangement

Jurisdiction	Nonrecurring Charge	
All States	$1,023.85	(C)

© 2024 Frontier Communications Parent, Inc. All rights reserved

5. SPECIAL ACCESS (Cont'd)

5.7 Rates and Charges (Cont'd)

5.7.15 Reserved

(M)

© 2022 Frontier Communications Parent, Inc. All rights reserved

5. SPECIAL ACCESS (Cont'd)

5.7 Rates and Charges (Cont'd)

(A) Rates

RSP Monthly Recurring Charge
Special Access Lines (Secondary CDL)

	Four-Wire Voiceband		DDS (2.4, 4.8, 9.6, 19.2 Kbps)		DDS (56, 64* Kbps)		
	3 Year	5 Year	3 Year	5 Year	3 Year	5 Year	
Jurisdiction							
California-WC	47.88	45.49	63.84	60.65	79.80	75.81	(D)
Illinois	28.15	26.67	52.25	49.50	64.60	61.20	
Indiana	42.00	41.40	60.80	57.60	79.80	75.60	
Michigan	34.05	32.43	63.84	60.80	83.79	79.80	
N Carolina	36.94	34.99	60.80	56.20	79.80	74.10	
Ohio	45.60	43.20	60.80	57.60	79.80	75.60	(D)
S Carolina	41.80	39.60	60.80	57.60	79.80	75.60	(D)
Wisconsin	25.53	24.19	43.11	40.84	56.58	53.60	

© 2022 Frontier Communications Parent, Inc. All rights reserved

5. SPECIAL ACCESS (Cont'd)

5.7 Rates and Charges (Cont'd)

5.7.16 Four-Wire Voiceband and Digital Data Service (DDS) Rate Stability Plan (RSP)# (Cont'd)

(A) Rates

RSP Monthly Recurring Charge
Special Access Lines (IC CDL)

			DDS				
	Four-Wire Voiceband		(2.4, 4.8, 9.6, 19.2 Kbps)		(56, 64* Kbps)		
Jurisdiction	3 Year	5 Year	3 Year	5 Year	3 Year	5 Year	
California-WC	47.88	45.49	63.84	60.65	79.80	75.81	(D)
Illinois							
Price Band A	28.15	26.67	52.25	49.50	64.60	61.20	
Price Band B	28.15	26.67	52.25	49.50	64.60	61.20	
Price Band C	28.15	26.67	52.25	49.50	64.60	61.20	
Indiana	42.00	41.40	60.80	57.60	79.80	75.60	
Michigan	34.05	32.43	63.84	60.80	83.79	79.80	
N Carolina	36.94	34.99	60.80	56.20	79.80	74.10	
Ohio	45.60	43.20	60.80	57.60	79.80	75.60	(D)
S Carolina	41.80	39.60	60.80	57.60	79.80	75.60	(D)
Wisconsin	25.53	24.19	43.11	40.84	56.58	53.60	

© 2022 Frontier Communications Parent, Inc. All rights reserved

5. SPECIAL ACCESS (Cont'd)

5.7 Rates and Charges (Cont'd)

5.7.16 Four-Wire Voiceband and Digital Data Service (DDS) Rate Stability Plan (RSP)# (Cont'd)

(A) Rates (Cont'd)

RSP Monthly Recurring Charge

Special Transport
(Per Airline Mile)

	Voiceband		DDS (All Speeds)		
Jurisdiction	3 Year	5 Year	3 Year	5 Year	
California-WC	4.28	4.07	4.31	4.09	(D)
Illinois					
Price Band A	2.60	2.47	2.22	2.09	
Price Band B	2.60	2.47	2.22	2.09	
Price Band C	2.60	2.47	2.22	2.09	
Indiana	3.50	3.31	4.07	3.85	
Michigan	3.61	3.42	3.47	3.29	
N Carolina	3.70	3.61	4.40	4.24	
Ohio	4.55	4.31	4.55	4.31	(D)
S Carolina	3.77	3.57	3.77	3.57	(D)
Wisconsin	2.76	2.62	2.77	2.62	

© 2022 Frontier Communications Parent, Inc. All rights reserved

5 SPECIAL ACCESS (Cont'd)

5.7 Rates and Charges (Cont'd)

5.7.17 Reserved

© 2022 Frontier Communications Parent, Inc. All rights reserved

5 SPECIAL ACCESS (Cont'd)

5.7 Rates and Charges (Cont'd)

5.7.17 Reserved

© 2022 Frontier Communications Parent, Inc. All rights reserved

5 SPECIAL ACCESS (Cont'd)

5.7 Rates and Charges (Cont'd)

5.7.18 DS1 Term Volume Plan (TVP) #

(A) Special Access Line, Per DS1 SAL

(1) One Year Term

	DS1 SAL (Secondary CDL)		
	Nonrecurring Charge, All Thresholds	Monthly Rates All Thresholds	
Jurisdiction			
All States			
Competitive	Not Available	Not Available	(C)

Service availability is limited. See # footnote on Page 5-99.

© 2022 Frontier Communications Parent, Inc. All rights reserved

5 SPECIAL ACCESS (Cont'd)

5.7 Rates and Charges (Cont'd)

5.7.18 Reserved (C)

© 2022 Frontier Communications Parent, Inc. All rights reserved

5 SPECIAL ACCESS (Cont'd)

5.7 Rates and Charges (Cont'd)

5.7.18 DS1 Term Volume Plan (TVP)# (Cont'd)

(A) Special Access Line, Per DS1 SAL (Cont'd)

1) One Year Term (Cont'd)

DS1 SAL (IC CDL)

Jurisdiction	Nonrecurring Charge, All Thresholds	Monthly Rates All Thresholds	
All States	Not Available	Not Available	(C)

Service availability is limited. See # footnote on Page 5-99.

© 2022 Frontier Communications Parent, Inc. All rights reserved

5 SPECIAL ACCESS (Cont'd)

5.7 Rates and Charges (Cont'd)

5.7.18 Reserved (C)

© 2022 Frontier Communications Parent, Inc. All rights reserved

5 SPECIAL ACCESS (Cont'd)

5.7 Rates and Charges (Cont'd)

5.7.18 Reserved (C)

© 2022 Frontier Communications Parent, Inc. All rights reserved

5 SPECIAL ACCESS (Cont'd)

5.7 Rates and Charges (Cont'd)

5.7.18 Reserved (C)

.

© 2022 Frontier Communications Parent, Inc. All rights reserved

5 SPECIAL ACCESS (Cont'd)

5.7 Rates and Charges (Cont'd)

5.7.18 Reserved (C)

© 2022 Frontier Communications Parent, Inc. All rights reserved

5 SPECIAL ACCESS (Cont'd)

5.7 Rates and Charges (Cont'd)

5.7.18 Reserved (C)

© 2022 Frontier Communications Parent, Inc. All rights reserved

5 SPECIAL ACCESS (Cont'd)

5.7 Rates and Charges (Cont'd)

5.7.18 DS1 Term Volume Plan (TVP)# (Cont'd)

(A) Special Access Line, Per DS1 SAL (Cont'd)

(2) Two Year Term

DS1 SAL (Secondary CDL)

Jurisdiction	Nonrecurring Charge, All Thresholds	Monthly Rates All Thresholds	
All States			
Competitive	Not Available	Not Available	(C)

Service availability is limited. See # footnote on Page 5-99.

© 2022 Frontier Communications Parent, Inc. All rights reserved

5 SPECIAL ACCESS (Cont'd)

5.7 Rates and Charges (Cont'd)

5.7.18 Reserved (C)

Service availability is limited. See # footnote on Page 5-99.

© 2022 Frontier Communications Parent, Inc. All rights reserved

5 SPECIAL ACCESS (Cont'd)

5.7 Rates and Charges (Cont'd)

5.7.18 Reserved

(A) Special Access Line, Per DS1 SAL (Cont'd)

(2) Two Year Term (Cont'd)

DS1 SAL (IC CDL)

Jurisdiction	Nonrecurring Charge, All Thresholds	Monthly Rates All Thresholds	
All States	Not Available	Not Available	(C)

© 2022 Frontier Communications Parent, Inc. All rights reserved

5 SPECIAL ACCESS (Cont'd)

5.7 Rates and Charges (Cont'd)

5.7.18 Reserved (C)

© 2022 Frontier Communications Parent, Inc. All rights reserved

5 SPECIAL ACCESS (Cont'd)

5.7 Rates and Charges (Cont'd)

5.7.18 Reserved (C)

© 2022 Frontier Communications Parent, Inc. All rights reserved

5 SPECIAL ACCESS (Cont'd)

5.7 Rates and Charges (Cont'd)

5.7.18 Reserved (C)

© 2022 Frontier Communications Parent, Inc. All rights reserved

5 SPECIAL ACCESS (Cont'd)

5.7 Rates and Charges (Cont'd)

5.7.18 Reserved (C)

© 2022 Frontier Communications Parent, Inc. All rights reserved

5 SPECIAL ACCESS (Cont'd)

5.7 Rates and Charges (Cont'd)

5.7.18 Reserved (C)

© 2022 Frontier Communications Parent, Inc. All rights reserved

5 SPECIAL ACCESS (Cont'd)

5.7 Rates and Charges (Cont'd)

5.7.18 DS1 Term Volume Plan (TVP)# (Cont'd)

(A) Special Access Line, Per DS1 SAL (Cont'd)

(3) Three Year Term

DS1 SAL (Secondary CDL)

Jurisdiction	Nonrecurring Charge, All Thresholds	Monthly Rates All Thresholds	
All States	Not Available	Not Available	(C)

Service availability is limited. See # footnote on Page 5-99.

© 2022 Frontier Communications Parent, Inc. All rights reserved

5 SPECIAL ACCESS (Cont'd)

5.7 Rates and Charges (Cont'd)

5.7.18 Reserved (C)

© 2022 Frontier Communications Parent, Inc. All rights reserved

5 SPECIAL ACCESS (Cont'd)

5.7 Rates and Charges (Cont'd)

5.7.18 DS1 Term Volume Plan (TVP)# (Cont'd)

(A) Special Access Line, Per DS1 SAL (Cont'd)

(3) Three Year Term (Cont'd)

DS1 SAL (IC CDL)

Jurisdiction	Nonrecurring Charge, All Thresholds	Monthly Rate All Thresholds	
All States	Not Available	Not Available	(C)

Service availability is limited. See # footnote on Page 5-99.

© 2022 Frontier Communications Parent, Inc. All rights reserved

5. SPECIAL ACCESS (Cont'd)

5.7 Rates and Charges (Cont'd)

5.7.18 Reserved (C)

© 2022 Frontier Communications Parent, Inc. All rights reserved

5 SPECIAL ACCESS (Cont'd)

5.7 Rates and Charges (Cont'd)

5.7.18 Reserved (C)

© 2022 Frontier Communications Parent, Inc. All rights reserved

5 SPECIAL ACCESS (Cont'd)

5.7 Rates and Charges (Cont'd)

5.7.18 Reserved (C)

© 2022 Frontier Communications Parent, Inc. All rights reserved

5 SPECIAL ACCESS (Cont'd)

5.7 Rates and Charges (Cont'd)

5.7.18 Reserved (C)

.

© 2022 Frontier Communications Parent, Inc. All rights reserved

5 SPECIAL ACCESS (Cont'd)

5.7 Rates and Charges (Cont'd)

5.7.18 Reserved (C)

© 2022 Frontier Communications Parent, Inc. All rights reserved

5. SPECIAL ACCESS (Cont'd)

5.7 Rates and Charges (Cont'd)

5.7.18 DS1 Term Volume Plan (TVP) # (Cont'd)

(A) Special Access Line, Per DS1 SAL (Cont'd)

(4) Five Year Term

Monthly Rate
DS1 SAL (Secondary CDL) Competitive
Threshold Levels

Jurisdiction	Nonrecurring Charge, All Thresholds	Monthly All Thresholds	
All States	Not Available	Not Available	(C)

Service availability is limited. See # footnote on Page 5-99.

© 2022 Frontier Communications Parent, Inc. All rights reserved

5. SPECIAL ACCESS (Cont'd)

5.7 Rates and Charges (Cont'd)

5.7.18 Reserved (M)

© 2022 Frontier Communications Parent, Inc. All rights reserved

5. SPECIAL ACCESS (Cont'd)

5.7 Rates and Charges (Cont'd)

5.7.18 DS1 Term Volume Plan (TVP) # (Cont'd)

(A) Special Access Line, Per DS1 SAL (Cont'd)

(4) Five Year Term (Cont'd)

Jurisdiction	Monthly Rate DS1 SAL (IC CDL) Threshold Levels: Nonrecurring Charge, All Thresholds	Monthly Rate DS1 SAL (IC CDL) Threshold Levels: Monthly All Thresholds	
All States	Not Available	Not Available	(C)

Service availability is limited. See # footnote on Page 5-99.

© 2022 Frontier Communications Parent, Inc. All rights reserved

5. SPECIAL ACCESS (Cont'd)

5.7 Rates and Charges (Cont'd)

(M)

5.7.18 Reserved

© 2022 Frontier Communications Parent, Inc. All rights reserved

5. SPECIAL ACCESS (Cont'd)

5.7 Rates and Charges (Cont'd)

5.7.18 Reserved (C)

© 2022 Frontier Communications Parent, Inc. All rights reserved

5. SPECIAL ACCESS (Cont'd)

5.7 Rates and Charges (Cont'd)

5.7.18 Reserved (C)

© 2022 Frontier Communications Parent, Inc. All rights reserved

5. SPECIAL ACCESS (Cont'd)

5.7 Rates and Charges (Cont'd)

5.7.18 Reserved (C)

© 2022 Frontier Communications Parent, Inc. All rights reserved

5. SPECIAL ACCESS (Cont'd)

5.7 Rates and Charges (Cont'd)

5.7.18 Reserved (C)

© 2022 Frontier Communications Parent, Inc. All rights reserved.

5. SPECIAL ACCESS (Cont'd)

5.7 Rates and Charges (Cont'd)

5.7.18 DS1 Term Volume Plan (TVP) # (Cont'd)

(A) Special Access Line, Per DS1 SAL (Cont'd)

(5) Eight Year Term

(C)

	DS1 SAL (Secondary CDL)	
Jurisdiction	Nonrecurring Charge, All Thresholds	Monthly Rates All Thresholds
All States	Not Available	Not Available

(C)

 # Service availability is limited. See # footnote on Page 5-99.

© 2022 Frontier Communications Parent, Inc. All rights reserved

5. SPECIAL ACCESS (Cont'd)

5.7 Rates and Charges (Cont'd)

5.7.18 Reserved (C)

© 2022 Frontier Communications Parent, Inc. All rights reserved

5. SPECIAL ACCESS (Cont'd)

5.7 Rates and Charges (Cont'd)

5.7.18 DS1 Term Volume Plan (TVP)# (Cont'd)

(A) Special Access Line, Per DS1 SAL (Cont'd)

(5) Eight Year Term (Cont'd) (C)

	DS1 SAL (IC CDL)		
	Nonrecurring Charge, All Thresholds	Monthly Rates All Thresholds	
Jurisdiction			
All States	Not Available	Not Available	(C)

Service availability is limited. See # footnote on Page 5-99.

© 2022 Frontier Communications Parent, Inc. All rights reserved

5. SPECIAL ACCESS (Cont'd)

5.7 Rates and Charges (Cont'd)

5.7.18 Reserved (C)

© 2022 Frontier Communications Parent, Inc. All rights reserved

5. SPECIAL ACCESS (Cont'd)

5.7 Rates and Charges (Cont'd)

5.7.18 DS1 Term Volume Plan (TVP) # (Cont'd)

(A) Special Access Line, Per DS1 SAL (Cont'd)

(6) Ten Year Term

	Monthly Rate DS1 SAL (Secondary CDL & IC CDL) Threshold Levels		
Jurisdiction	Nonrecurring Charge, All Thresholds	Monthly All Thresholds	
All States	Not Available	Not Available	(C)

Service availability is limited. See # footnote on Page 5-99.

© 2022 Frontier Communications Parent, Inc. All rights reserved

5. SPECIAL ACCESS (Cont'd)

5.7 Rates and Charges (Cont'd)

5.7.18 Reserved (C)

© 2022 Frontier Communications Parent, Inc. All rights reserved

5. SPECIAL ACCESS (Cont'd)

5.7 Rates and Charges (Cont'd)

5.7.18 Reserved (C)

© 2022 Frontier Communications Parent, Inc. All rights reserved

5. SPECIAL ACCESS (Cont'd)

5.7 Rates and Charges (Cont'd)

5.7.18 Reserved (C)

© 2022 Frontier Communications Parent, Inc. All rights reserved

5 SPECIAL ACCESS (Cont'd)

5.7 Rates and Charges (Cont'd)

5.7.19 High Capacity Digital E1 (2.048 Mbps) Facilities#

(A) Standard Arrangements

	Special Access Line, each (Secondary CDL, Competitive Counties)				
Jurisdiction	Nonrecurring Charge	One Year Monthly Rate	Three Year Monthly Rate	Five Year Monthly Rate	
California-WC	500.00	320.00	288.00	256.00	(D)
Illinois	NA	NA	NA	NA	
Indiana	NA	NA	NA	NA	
Michigan	NA	NA	NA	NA	
N Carolina	NA	NA	NA	NA	
Ohio	NA	NA	NA	NA	(D)
S Carolina	NA	NA	NA	NA	(D)
Wisconsin	NA	NA	NA	NA	

Service availability is limited. See # footnote on Page 5-20.

© 2022 Frontier Communications Parent, Inc. All rights reserved

5 SPECIAL ACCESS (Cont'd)

5.7 Rates and Charges (Cont'd)

5.7.19 High Capacity Digital E1 (2.048 Mbps) Facilities# (Cont'd)

(A) Standard Arrangements (Cont'd)

Special Transport

Jurisdiction	Per Termination	Facility, Per Airline Mile	
California-WC	40.00	25.00	(D)
Illinois	NA	NA	
Indiana	NA	NA	
Michigan	NA	NA	
N Carolina	NA	NA	
Ohio	NA	NA	(D)
S Carolina	NA	NA	(D)
Wisconsin	NA	NA	

Service availability is limited. See # footnote on Page 5-20

© 2022 Frontier Communications Parent, Inc. All rights reserved

5 SPECIAL ACCESS (Cont'd)

5.7 Rates and Charges (Cont'd)

5.7.20 High Voltage Protection

Jurisdiction	Initial Common Equipment Nonrecurring Charge	Initial Common Equipment Monthly Rate	Terminating Equipment, Per Circuit Terminated Nonrecurring Charge	Terminating Equipment, Per Circuit Terminated Monthly Rate	
					(D)
					(D)
					(D)
					(D)
Illinois					
Price Band A	500.00	108.22	50.00	28.81	
Price Band B	500.00	108.22	50.00	28.81	
Price Band C	500.00	108.22	50.00	28.81	
Indiana					
Price Band A	500.00	108.22	50.00	28.81	
Price Band B	500.00	108.22	50.00	28.81	
Price Band C	500.00	108.22	50.00	28.81	
Michigan	500.00	108.22	50.00	28.81	

© 2022 Frontier Communications Parent, Inc. All rights reserved

5 SPECIAL ACCESS (Cont'd)

5.7 Rates and Charges (Cont'd)

5.7.20 High Voltage Protection

Jurisdiction	Initial Common Equipment Nonrecurring Charge	Initial Common Equipment Monthly Rate	Terminating Equipment, Per Circuit Terminated Nonrecurring Charge	Terminating Equipment, Per Circuit Terminated Monthly Rate	
North Carolina					
Price Band A	500.00	108.22	50.00	28.81	(D)
Price Band B	500.00	108.22	50.00	28.81	(D)
Price Band C	500.00	108.22	50.00	28.81	(D)
Ohio					
Price Band A	500.00	108.22	50.00	28.81	(D)
Price Band B	500.00	108.22	50.00	28.81	(D)
Price Band C	500.00	108.22	50.00	28.81	(D)
South Carolina	500.00	108.22	50.00	28.81	(D)
Wisconsin	500.00	108.22	50.00	28.81	(D)

© 2022 Frontier Communications Parent, Inc. All rights reserved

5. SPECIAL ACCESS (Cont'd)

5.7 Rates and Charges (Cont'd)

5.7.21 LAN Extension Service (LES) #

(1) LES 10 Mbps Special Access Line, Each

	3 Year Term Plan		5 Year Term Plan		
	Nonrecurring Charge	Monthly Rate	Nonrecurring Charge	Monthly Rate	
Jurisdiction					
California-WC	1300.00	700.00	1300.00	650.00	(D)
Illinois	1300.00	700.00	1300.00	650.00	
Indiana	1300.00	700.00	1300.00	650.00	
Michigan	1300.00	700.00	1300.00	650.00	
North Carolina	1300.00	700.00	1300.00	650.00	
Ohio	1300.00	700.00	1300.00	650.00	(D)
South Carolina	1300.00	700.00	1300.00	650.00	(D)
Wisconsin	1300.00	700.00	1300.00	650.00	

Service availability limited. Refer to # footnote on Page 5-126.

© 2022 Frontier Communications Parent, Inc. All rights reserved

5. SPECIAL ACCESS (Cont'd)

5.7 Rates and Charges (Cont'd)

5.7.21 LAN Extension Service (LES) # (Cont'd)

(2) LES 10 Mbps Transport, Per Airline Mile

	Monthly Rate		
	3 Year Term Plan	5 Year Term Plan	
Jurisdiction			
California-WC	88.00	81.00	(D)
Illinois	88.00	81.00	
Indiana	88.00	81.00	
Michigan	88.00	81.00	
North Carolina	88.00	81.00	
Ohio	88.00	81.00	(D)
South Carolina	88.00	81.00	(D)
Wisconsin	88.00	81.00	

Service availability limited. Refer to # footnote on Page 5-126.

© 2022 Frontier Communications Parent, Inc. All rights reserved

5. SPECIAL ACCESS (Cont'd)

5.7 Rates and Charges (Cont'd)

5.7.21 LAN Extension Service (LES)#(Cont'd)

(3) LES 100 Mbps Special Access Line, Each

	3 Year Term Plan		5 Year Term Plan		
	Nonrecurring Charge	Monthly Rate	Nonrecurring Charge	Monthly Rate	
Jurisdiction					
California-WC	1300.00	1450.00	1300.00	1400.00	(D)
Illinois	1300.00	1450.00	1300.00	1400.00	
Indiana	1300.00	1450.00	1300.00	1400.00	
Michigan	1300.00	1450.00	1300.00	1400.00	
North Carolina	1300.00	1450.00	1300.00	1400.00	
Ohio	1300.00	1450.00	1300.00	1400.00	(D)
South Carolina	1300.00	1450.00	1300.00	1400.00	(D)
Wisconsin	1300.00	1450.00	1300.00	1400.00	

Service availability limited. Refer to # footnote on Page 5-126.

© 2022 Frontier Communications Parent, Inc. All rights reserved

5. SPECIAL ACCESS (Cont'd)

5.7 Rates and Charges (Cont'd)

5.7.21 LAN Extension Service (LES) #(Cont'd)

(4) LES 100 Mbps Transport, Per Airline Mile

Jurisdiction	Monthly Rate 3 Year Term Plan	Monthly Rate 5 Year Term Plan	
California-WC	108.00	101.00	(D)
Illinois	108.00	101.00	
Indiana	108.00	101.00	
Michigan	108.00	101.00	
North Carolina	108.00	101.00	
Ohio	108.00	101.00	(D)
South Carolina	108.00	101.00	(D)
Wisconsin	108.00	101.00	

Service availability limited. Refer to # footnote on Page 5-126.

© 2022 Frontier Communications Parent, Inc. All rights reserved

5. SPECIAL ACCESS (Cont'd)

5.7 Rates and Charges (Cont'd)

5.7.21 LAN Extension Service (LES) #(Cont'd)

(5) LES 1 Gbps Special Access Line, Each

	3 Year Term Plan		5 Year Term Plan		
	Nonrecurring Charge	Monthly Rate	Nonrecurring Charge	Monthly Rate	
Jurisdiction					
California-WC	1300.00	2150.00	1300.00	2050.00	(D)
Illinois	1300.00	2150.00	1300.00	2050.00	
Indiana	1300.00	2150.00	1300.00	2050.00	
Michigan	1300.00	2150.00	1300.00	2050.00	
North Carolina	1300.00	2150.00	1300.00	2050.00	
Ohio	1300.00	2150.00	1300.00	2050.00	(D)
South Carolina	1300.00	2150.00	1300.00	2050.00	(D)
Wisconsin	1300.00	2150.00	1300.00	2050.00	

Service availability limited. Refer to # footnote on Page 5-126.

© 2022 Frontier Communications Parent, Inc. All rights reserved

5. SPECIAL ACCESS (Cont'd)

5.7 Rates and Charges (Cont'd)

5.7.21 LAN Extension Service (LES) #(Cont'd)

(6) LES 1 Gbps Transport, Per Airline Mile

	Monthly Rate		
	3 Year Term Plan	5 Year Term Plan	
Jurisdiction			
California-WC	128.00	121.00	(D)
Illinois	128.00	121.00	
Indiana	128.00	121.00	
Michigan	128.00	121.00	
North Carolina	128.00	121.00	
Ohio	128.00	121.00	(D)
South Carolina	128.00	121.00	
0			(D)
Wisconsin	128.00	121.00	

Service availability limited. Refer to # footnote on Page 5-126.

© 2022 Frontier Communications Parent, Inc. All rights reserved

5 SPECIAL ACCESS (Cont'd)

5.7 Rates and Charges (Cont'd)

5.7.22 DS3 Term Volume Plan#

(A) Protected Individual DS3 SAL with and without Telephone Company Electronics (C)

(Secondary CDL Competitive and IC CDL)

	All Commitment Level
3 Year	Not Available
5 Year	Not Available
7 Year	Not Available

(C)

Service availability limited. Refer to # footnote on Page 5-132.

© 2022 Frontier Communications Parent, Inc. All rights reserved

5 SPECIAL ACCESS (Cont'd)

5.7 Rates and Charges (Cont'd)

5.7.22 Reserved (C)

© 2022 Frontier Communications Parent, Inc. All rights reserved

5 SPECIAL ACCESS (Cont'd)

5.7 Rates and Charges (Cont'd)

5.7.22 Reserved (C)

© 2022 Frontier Communications Parent, Inc. All rights reserved

5 SPECIAL ACCESS (Cont'd)

5.7 Rates and Charges (Cont'd)

5.7.22 Reserved (C)

.

© 2022 Frontier Communications Parent, Inc. All rights reserved

5 SPECIAL ACCESS (Cont'd)

5.7 Rates and Charges (Cont'd)

(Reserved for Future Use)

© 2022 Frontier Communications Parent, Inc. All rights reserved

5 SPECIAL ACCESS (Cont'd)

5.8 Miscellaneous Special Access Services

5.8.1 (Reserved for Future Use)

5.8.2 (Reserved for Future Use)

5.8.3 (Reserved for Future Use)

© 2022 Frontier Communications Parent, Inc. All rights reserved

5 SPECIAL ACCESS (Cont'd)

5.8 Miscellaneous Special Access Services

5.8.4 Reserved

5.8.5 Clear Channel Capability

(A) Description of Service

An arrangement that allows the customer to transport 1.536 Mbps of information through a DS1 with no constraint on the quantity or sequence of one (mark) and zero (space) bits utilizing the Bipolar with Eight Zero Substitution (B8ZS) method of providing bit sequence independence. This arrangement is capable of transporting DS1 signals which utilize Superframe or Extended Superframe Format (ESF) as defined by the American National Standards Institute (ANSI) T1.107-2002 (R2006) standard. The installation interval for Clear Channel Capability may exceed standard intervals where equipment in the central office is not readily available. The charges apply on a per SAL basis. Clear Channel Capability for DS1 is provided under Section 11.8.3(H) to the Federal Government.

This arrangement requires the customer signal at the channel interface to conform to the B8ZS method of providing bit sequence independence, as described in ANSI T1.102-1993 (R2005) and Section 6103 of the GTE Technical Interface Reference Manual.

© 2022 Frontier Communications Parent, Inc. All rights reserved

5. SPECIAL ACCESS (Cont'd)

5.8 Miscellaneous Special Access Services (Cont'd)

5.8.5 Clear Channel Capability (Cont'd)

(B) Rates

Jurisdiction	Nonrecurring Charge	Monthly Rate	
ALL STATES	$1,417.62	$378.03	(C)

© 2024 Frontier Communications Parent, Inc. All rights reserved

5. SPECIAL ACCESS (Cont'd)

5.8 Miscellaneous Special Access Services (Cont'd)

5.8.5 Reserved (C)

© 2022 Frontier Communications Parent, Inc. All rights reserved

5 SPECIAL ACCESS (Cont'd)
5.8 Miscellaneous Special Access Services (Cont'd)
5.8.6 Reserved

© 2022 Frontier Communications Parent, Inc. All rights reserved

5 SPECIAL ACCESS (Cont'd)

5.8 Miscellaneous Special Access Services (Cont'd)

5.8.6 Reserved

© 2022 Frontier Communications Parent, Inc. All rights reserved

5 SPECIAL ACCESS (Cont'd)

5.9 Reserved

© 2022 Frontier Communications Parent, Inc. All rights reserved

6. MISCELLANEOUS SERVICES (Cont'd)

6.1 (Reserved for Future Use)

© 2022 Frontier Communications Parent, Inc. All rights reserved

6. MISCELLANEOUS SERVICES (Cont'd)

6.2 Additional Labor

Additional Labor is that labor requested by the customer on a given FIA and agreed to by the Telephone Company as set forth in (A) through (F) following. The Telephone Company will notify the customer that Additional Labor charges as set forth in (G) following will apply before any Additional Labor is undertaken. Additional Labor charges will also apply if the requirement for the Additional Labor is the fault of the customer or parties on whose behalf it acts. Charges for additional labor will apply per order submitted.

(A) Overtime Installation

Overtime installation is that Telephone Company installation effort outside the business day. Overtime rates will apply anytime outside the business day and all day Saturday. Premium time rates will apply all day Sunday and on all Telephone Company approved holidays. For applicable holidays in each jurisdiction contact Issuing Carrier identified on Title Pages 2 and 3 preceding.

(B) Overtime Repair

Overtime repair is Telephone Company repair which could have been performed during the normal business day, but that is delayed at the specific request of the customer to a later time period which is outside the normal business day or to a weekend day or holiday. The request will result in the application of overtime rates anytime outside the business day and all day Saturday. Premium time rates will apply on Sunday and Telephone Company approved holidays. These rates, as set forth in Section 6.2 following, will only apply when there is a delay of repair at the request of the customer to the time periods stated above.

(C) Additional Installation Testing

Additional installation testing is that testing performed by the Telephone Company at the time of installation which is in addition to normal pre-service and acceptance testing.

Standby

Standby includes all time in excess of one-half (1/2) hour during which Telephone Company personnel are available to make coordinated tests on a given FIA. The standby charge applies only when Telephone Company personnel must wait more than 30 minutes beyond a prearranged, mutually agreed appointment time. Standby charges will cease when testing begins, or when Telephone Company personnel are released from the standby requirement, or when testing is rescheduled for a later date or time. Charges will not be applicable if Telephone Company personnel cause the delay.

(E) Testing and Maintenance with Other Telephone Companies

Additional testing, maintenance, or repair of facilities which connect to facilities of other telephone companies, which is in addition to normal effort required to test, maintain, or repair facilities provided solely by the Telephone Company.

(F) Other Labor

Other labor is that additional labor not included in (A) through (E) preceding, and labor incurred to accommodate a specific customer request that involves only labor which is not covered by any other section of this Guide.

© 2022 Frontier Communications Parent, Inc. All rights reserved

6. MISCELLANEOUS SERVICES (Cont'd)

6.2 Additional Labor (Cont'd)

(G) Charges for Additional Labor

(1) The charges for additional labor are as follows:

- Additional Cooperative Acceptance Testing – Special
- Maintenance of Service (see Section 6.3)
- Nonscheduled Testing – Special
- Other Labor (see Section 6.2(F))
- Testing and Maintenance with Other Telephone Companies (see Section 6.2(E))

Jurisdiction	Labor Periods Basic Time, Business Day, Per Technician First Half Hour or Fraction Thereof	Each Additional Half Hour or Fraction Thereof	
California-WC	150.00	150.00	
			(D)
			(D)
			(D)
			(D)
Illinois			
Special Access	150.00	150.00	
Price Bands A, B and C	150.00	150.00	
All Other Services	150.00	150.00	
Indiana			
Special Access	150.00	150.00	
Price Bands A, B and C	150.00	150.00	
All Other Services	150.00	150.00	
Michigan	150.00	150.00	
North Carolina			
Special Access	150.00	150.00	
Price Bands A, B and C	150.00	150.00	
All Other Services	150.00	150.00	

© 2022 Frontier Communications Parent, Inc. All rights reserved

6. MISCELLANEOUS SERVICES (Cont'd)

6.2 Additional Labor (Cont'd)

(G) Charges for Additional Labor

(1) The charges for additional labor are as follows:

- Additional Cooperative Acceptance Testing – Special
- Maintenance of Service (see Section 6.3)
- Nonscheduled Testing – Special
- Other Labor (see Section 6.2(F))
- Testing and Maintenance with Other Telephone Companies (see Section 6.2(E))

Jurisdiction	Labor Periods Basic Time, Business Day, Per Technician First Half Hour or Fraction Thereof	Each Additional Half Hour or Fraction Thereof	
Ohio			
Special Access	150.00	150.00	
Price Bands A, B and C	150.00	150.00	
All Other Services	150.00	150.00	
			(D)
			(D)
			(D)
			(D)
South Carolina	150.00	150.00	
			(D)
			(D)
			(D)
			(D)
Wisconsin	150.00	150.00	

Material on this page formerly appeared on Page 6-3

© 2022 Frontier Communications Parent, Inc. All rights reserved

6. MISCELLANEOUS SERVICES (Cont'd)

6.2 Additional Labor (Cont'd)

(G) Charges for Additional Labor (Cont'd)

(1) (Cont'd)

	Labor Periods Overtime, Outside the Business Day, Per Technician*		
	First Half Hour or Fraction Thereof	Each Additional Half Hour or Fraction Thereof	
Jurisdiction			
California-WC	200.00	200.00	
			(D)
			(D)
			(D)
			(D)
Illinois			
Special Access	200.00	200.00	
Price Bands A, B and C	200.00	200.00	
All Other Services	200.00	200.00	
Indiana			
Special Access	200.00	200.00	
Price Bands A, B and C	200.00	200.00	
All Other Services	200.00	200.00	
Michigan	200.00	200.00	
North Carolina			
Special Access	200.00	200.00	
Price Bands A, B and C	200.00	200.00	
All Other Services	200.00	200.00	

* A call out of a Telephone Company employee at a time not consecutive with the business day is subject to a minimum charge of four hours.

© 2022 Frontier Communications Parent, Inc. All rights reserved

6. MISCELLANEOUS SERVICES (Cont'd)

6.2 Additional Labor (Cont'd)

(G) Charges for Additional Labor (Cont'd)

(1) (Cont'd)

Jurisdiction	Labor Periods Overtime, Outside the Business Day, Per Technician* First Half Hour or Fraction Thereof	Each Additional Half Hour or Fraction Thereof	
Ohio			
Special Access	150.00	150.00	(D)
Price Bands A, B and C	150.00	150.00	(D)
All Other Services	150.00	150.00	(D)
			(D)
South Carolina	150.00	150.00	(D)
			(D)
			(D)
			(D)
Wisconsin	150.00	150.00	

Material on this page formerly appeared on Page 6-4

© 2022 Frontier Communications Parent, Inc. All rights reserved

6. MISCELLANEOUS SERVICES (Cont'd)

6.2 Additional Labor (Cont'd)

(G) Charges for Additional Labor (Cont'd)

(1) (Cont'd)

Jurisdiction	Labor Periods Premium Time, Outside the Business Day, Per Technician* First Half Hour or Fraction Thereof	Each Additional Half Hour or Fraction Thereof	
California-WC	250.00	250.00	
			(D)
			(D)
			(D)
			(D)
Illinois			
Special Access	250.00	250.00	
Price Bands A, B and C	250.00	250.00	
All Other Services	250.00	250.00	
Indiana			
Special Access	250.00	250.00	
Price Bands A, B and C	250.00	250.00	
All Other Services	250.00	250.00	
Michigan	250.00	250.00	
North Carolina			
Special Access	250.00	250.00	
Price Bands A, B and C	250.00	250.00	
All Other Services	250.00	250.00	

* A call out of a Telephone Company employee at a time not consecutive with the business day is subject to a minimum charge of four hours.

© 2022 Frontier Communications Parent, Inc. All rights reserved

6. MISCELLANEOUS SERVICES (Cont'd)

6.2 Additional Labor (Cont'd)

(G) Charges for Additional Labor (Cont'd)

(1) (Cont'd)

Jurisdiction	Labor Periods Premium Time, Outside the Business Day, Per Technician* First Half Hour or Fraction Thereof	Each Additional Half Hour or Fraction Thereof	
Ohio			
Special Access	250.00	250.00	(D)
Price Bands A, B and C	250.00	250.00	(D)
All Other Services	250.00	250.00	(D)
			(D)
South Carolina	250.00	250.00	
			(D)
			(D)
			(D)
			(D)
Wisconsin	250.00	250.00	

Material on this page formerly appeared on Page 6-5

© 2022 Frontier Communications Parent, Inc. All rights reserved

6. MISCELLANEOUS SERVICES (Cont'd)

6.2 Additional Labor (Cont'd)

(G) Charges for Additional Labor (Cont'd)

(2) The charges for additional labor are as follows:

- Additional Installation Testing (see Section 6.2(C))
- Overtime Installation (see Section 6.2(A))
- Overtime Repair (see Section 6.2 (B))

Jurisdiction	Labor Periods Basic Time, Business Day, Per Technician First Half Hour or Fraction Thereof	Each Additional Half Hour or Fraction Thereof	
California-WC	33.86	22.57	
			(D)
			(D)
			(D)
			(D)
Illinois			
Special Access	27.60	18.40	
Price Bands A, B and C	27.60	18.40	
All Other Services	27.60	18.40	
Indiana			
Special Access	28.46	18.98	
Price Bands A, B and C	28.46	18.98	
All Other Services	28.46	18.98	
Michigan	27.45	18.30	
North Carolina			
Special Access	36.07	24.05	
Price Bands A, B and C	36.07	24.05	
All Other Services	36.07	24.05	

© 2022 Frontier Communications Parent, Inc. All rights reserved

6. MISCELLANEOUS SERVICES (Cont'd)

6.2 Additional Labor (Cont'd)

(G) Charges for Additional Labor (Cont'd)

(2) The charges for additional labor are as follows:

- Additional Installation Testing (see Section 6.2(C))
- Overtime Installation (see Section 6.2(A))
- Overtime Repair (see Section 6.2 (B))

Jurisdiction	Labor Periods Basic Time, Business Day, Per Technician First Half Hour or Fraction Thereof	Each Additional Half Hour or Fraction Thereof	
Ohio			
Special Access	27.98	18.65	(D)
Price Bands A, B and C	27.98	18.65	(D)
All Other Services	27.98	18.65	(D)
			(D)
South Carolina	35.15	23.44	(D)
			(D)
			(D)
			(D)
Wisconsin	30.35	20.24	

Material on this page formerly appeared on Page 6-6

© 2022 Frontier Communications Parent, Inc. All rights reserved

6. MISCELLANEOUS SERVICES (Cont'd)

6.2 Additional Labor (Cont'd)

(G) Charges for Additional Labor (Cont'd)

(2) (Cont'd)

Jurisdiction	Labor Periods Overtime, Outside the Business Day, Per Technician* First Half Hour or Fraction Thereof	Each Additional Half Hour or Fraction Thereof	
California-WC	100.00	75.00	
			(D)
			(D)
			(D)
			(D)
Illinois			
Special Access	100.00	75.00	
Price Bands A, B and C	100.00	75.00	
All Other Services	100.00	75.00	
Indiana			
Special Access	100.00	75.00	
Price Bands A, B and C	100.00	75.00	
All Other Services	100.00	75.00	
Michigan	100.00	75.00	
North Carolina			
Special Access	100.00	75.00	
Price Bands A, B and C	100.00	75.00	
All Other Services	100.00	75.00	

* A call out of a Telephone Company employee at a time not consecutive with the business day is subject to a minimum charge of four hours.

© 2022 Frontier Communications Parent, Inc. All rights reserved

6. MISCELLANEOUS SERVICES (Cont'd)

6.2 Additional Labor (Cont'd)

(G) Charges for Additional Labor (Cont'd)

(2) (Cont'd)

Jurisdiction	Labor Periods Overtime, Outside the Business Day, Per Technician* First Half Hour or Fraction Thereof	Each Additional Half Hour or Fraction Thereof	
Ohio			
Special Access	100.00	75.00	(D)
Price Bands A, B and C	100.00	75.00	(D)
All Other Services	100.00	75.00	(D)
			(D)
South Carolina	100.00	75.00	(D)
			(D)
Wisconsin	100.00	75.00	(D)
			(D)

Material on this page formerly appeared on Page 6-7

* A call out of a Telephone Company employee at a time not consecutive with the business day is subject to a minimum charge of four hours.

© 2022 Frontier Communications Parent, Inc. All rights reserved

6. MISCELLANEOUS SERVICES (Cont'd)

6.2 Additional Labor (Cont'd)

(G) Charges for Additional Labor (Cont'd)

(2) (Cont'd)

Jurisdiction	Labor Periods Premium Time, Outside the Business Day, Per Technician* First Half Hour or Fraction Thereof	Each Additional Half Hour or Fraction Thereof	
California-WC	150.00	125.00	
			(D)
			(D)
			(D)
			(D)
Illinois			
Special Access	150.00	125.00	
Price Bands A, B and C	150.00	125.00	
All Other Services	150.00	125.00	
Indiana			
Special Access	150.00	125.00	
Price Bands A, B and C	150.00	125.00	
All Other Services	150.00	125.00	
Michigan	150.00	125.00	
North Carolina			
Special Access	150.00	125.00	
Price Bands A, B and C	150.00	125.00	
All Other Services	150.00	125.00	

* A call out of a Telephone Company employee at a time not consecutive with the business day is subject to a minimum charge of four hours.

© 2022 Frontier Communications Parent, Inc. All rights reserved

6. MISCELLANEOUS SERVICES (Cont'd)

6.2 Additional Labor (Cont'd)

(G) Charges for Additional Labor (Cont'd)

(2) (Cont'd)

Jurisdiction	Labor Periods Premium Time, Outside the Business Day, Per Technician* First Half Hour or Fraction Thereof	Each Additional Half Hour or Fraction Thereof	
Ohio			
Special Access	150.00	125.00	(D)
Price Bands A, B and C	150.00	125.00	(D)
All Other Services	150.00	125.00	(D)
			(D)
South Carolina	150.00	125.00	(D)
			(D)
			(D)
			(D)
Wisconsin	150.00	125.00	

* A call out of a Telephone Company employee at a time not consecutive with the business day is subject to a minimum charge of four hours.

Material on this page formerly appeared on Page 6-8

© 2022 Frontier Communications Parent, Inc. All rights reserved

6. MISCELLANEOUS SERVICES (Cont'd)

6.2 Additional Labor (Cont'd)

(G) Charges for Additional Labor (Cont'd)

(3) The charges for additional labor are as follows:

- Standby (see Section 6.2)

Jurisdiction	Labor Periods Basic Time, Business Day, Per Technician First Half Hour or Fraction Thereof	Each Additional Half Hour or Fraction Thereof	
California-WC	None	60.00	
			(D)
			(D)
			(D)
			(D)
Illinois			
Special Access	None	60.00	
Price Bands A, B and C	None	60.00	
All Other Services	None	60.00	
Indiana			
Special Access	None	60.00	
Price Bands A, B and C	None	60.00	
All Other Services	None	60.00	
Michigan	None	60.00	
North Carolina			
Special Access	None	60.00	
Price Bands A, B and C	None	60.00	
All Other Services	None	60.00	

© 2022 Frontier Communications Parent, Inc. All rights reserved

6. MISCELLANEOUS SERVICES (Cont'd)

6.2 Additional Labor (Cont'd)

(G) Charges for Additional Labor (Cont'd)

(3) The charges for additional labor are as follows:

- Standby (see Section 6.2)

Jurisdiction	Labor Periods Basic Time, Business Day, Per Technician First Half Hour or Fraction Thereof	Each Additional Half Hour or Fraction Thereof	
Ohio			
Special Access	None	60.00	(D)
Price Bands A, B and C	None	60.00	(D)
All Other Services	None	60.00	(D)
			(D)
South Carolina	None	60.00	(D)
			(D)
			(D)
			(D)
Wisconsin	None	60.00	

Material on this page formerly appeared on Page 6-9

© 2022 Frontier Communications Parent, Inc. All rights reserved

6. MISCELLANEOUS SERVICES (Cont'd)

6.2 Additional Labor (Cont'd)

(G) Charges for Additional Labor (Cont'd)

(3) (Cont'd)

Jurisdiction	Labor Periods Overtime, Outside the Business Day, Per Technician* First Half Hour or Fraction Thereof	Each Additional Half Hour or Fraction Thereof	
California-WC	None	70.00	
			(D)
			(D)
			(D)
			(D)
Illinois			
Special Access	None	70.00	
Price Bands A, B and C	None	70.00	
All Other Services	None	70.00	
Indiana			
Special Access	None	70.00	
Price Bands A, B and C	None	70.00	
All Other Services	None	70.00	
Michigan	None	70.00	
North Carolina			
Special Access	None	70.00	
Price Bands A, B and C	None	70.00	
All Other Services	None	70.00	

* A call out of a Telephone Company employee at a time not consecutive with the business day is subject to a minimum charge of four hours.

© 2022 Frontier Communications Parent, Inc. All rights reserved

6. MISCELLANEOUS SERVICES (Cont'd)

6.2 Additional Labor (Cont'd)

(G) Charges for Additional Labor (Cont'd)

(3) (Cont'd)

	Labor Periods Overtime, Outside the Business Day, Per Technician*		
Jurisdiction	First Half Hour or Fraction Thereof	Each Additional Half Hour or Fraction Thereof	
Ohio			
Special Access	None	70.00	(D)
Price Bands A, B and C	None	70.00	(D)
All Other Services	None	70.00	(D)
			(D)
South Carolina	None	70.00	(D)
			(D)
Wisconsin	None	70.00	(D)
			(D)

Material on this page formerly appeared on Page 6-10

* A call out of a Telephone Company employee at a time not consecutive with the business day is subject to a minimum charge of four hours.

© 2022 Frontier Communications Parent, Inc. All rights reserved

6. MISCELLANEOUS SERVICES (Cont'd)

6.2 Additional Labor (Cont'd)

(G) Charges for Additional Labor (Cont'd)

(3) (Cont'd)

Jurisdiction	Labor Periods Premium Time, Outside the Business Day, Per Technician* First Half Hour or Fraction Thereof	Each Additional Half Hour or Fraction Thereof	
California-WC	None	80.00	
			(D)
			(D)
			(D)
			(D)
Illinois			
Special Access	None	80.00	
Price Bands A, B and C	None	80.00	
All Other Services	None	80.00	
Indiana			
Special Access	None	80.00	
Price Bands A, B and C	None	80.00	
All Other Services	None	80.00	
Michigan	None	80.00	
North Carolina			
Special Access	None	80.00	
Price Bands A, B and C	None	80.00	
All Other Services	None	80.00	

* A call out of a Telephone Company employee at a time not consecutive with the business day is subject to a minimum charge of four hours.

© 2022 Frontier Communications Parent, Inc. All rights reserved

6. MISCELLANEOUS SERVICES (Cont'd)

6.2 Additional Labor (Cont'd)

(G) Charges for Additional Labor (Cont'd)

(3) (Cont'd)

Jurisdiction	Labor Periods Premium Time, Outside the Business Day, Per Technician* First Half Hour or Fraction Thereof	Each Additional Half Hour or Fraction Thereof	
Ohio			
Special Access	None	80.00	(D)
Price Bands A, B and C	None	80.00	(D)
All Other Services	None	80.00	(D)
			(D)
South Carolina	None	80.00	(D)
			(D)
			(D)
			(D)
Wisconsin	None	80.00	

Material on this page formerly appeared on Page 6-11

* A call out of a Telephone Company employee at a time not consecutive with the business day is subject to a minimum charge of four hours.

© 2022 Frontier Communications Parent, Inc. All rights reserved

6. MISCELLANEOUS SERVICES (Cont'd)

6.3 Maintenance of Service Charge

(A) When a customer reports trouble to the Telephone Company for clearance, the customer shall be responsible for payment of a Maintenance of Service Charge when Telephone Company personnel are dispatched to the customer's location and no trouble is found in the Telephone Company's facilities. Failure of Telephone Company personnel to find trouble in Telephone Company facilities will result in no charge if the trouble is actually in those facilities, but not discovered at the time.

In this case, or in (B) following, no credit allowance will be applicable for the interruption involved, unless the trouble is found in the Telephone Company's facilities.

(B) The customer shall be responsible for payment of a Maintenance of Service Charge when the Telephone Company dispatches personnel to the customer's location and the trouble is in equipment or communications systems provided by other than the Telephone Company or in detariffed CPE provided by the Telephone Company.

(C) The Maintenance of Service Charge time period will begin when Telephone Company personnel are dispatched. This will only include the actual time required to reach the customer's location and perform an investigation. The time period will end when the investigation is finished. The labor charge as set forth in 6.2 (G) preceding will apply to Maintenance of Service at the appropriate Basic, Overtime or Premium rate. These charges apply whether the trouble is in the equipment of communications systems provided by other than the Telephone Company, or in detariffed CPE provided by the Telephone Company.

© 2022 Frontier Communications Parent, Inc. All rights reserved

6. MISCELLANEOUS SERVICES (Cont'd)

6.4 Telecommunications Service Priority (TSP) System

(A) Description of the Service

The TSP System is a service that provides for the priority provisioning and/or restoration of National Security Emergency Preparedness (NSEP) telecommunications services. The TSP System applies only to NSEP services, includes both Switched and Special FIA and provides the Telephone Company with a guide to the sequence in which services are to be provisioned and/or restored.

The Telephone Company currently has Special Access circuits classified as RP (Restoration Priority). These facilities were offered under part 64.401, Subpart D, Appendix A of the FCC Rules and Regulations prior to the revisions released November 17, 1988 under GEN. Docket No. 87-505 (FCC 88-341). These facilities will maintain their RP designation and priority treatment until either converted by the customer to the TSP System, or until March 10, 1993, whichever occurs first.

All FIA that can be identified by a unique circuit identifier can be provisioned for NSEP service by the Telephone Company.

The rates and charges associated with a customer subscribing to the TSP System are as specified in Section 6.4(G).

(B) Obtaining TSP System Service

The Executive Office of the President through the TSP Program Office, is empowered with the authority to receive, evaluate and process requests for NSEP services. The TSP Program Office makes the priority level assignments and issues the TSP authorization code reflecting the priority assignment associated with a request. The customer provides the TSP authorization code, in addition to all the other details necessary to complete the order (ASR) to the Telephone Company to obtain TSP System service.

The TSP authorization code, assigned on a per ASR basis, consists of a 12-character field consisting of a nine-character control ID followed by a dash and a two-character field specifying the priority level assignment. Its structure is as follows:

TSPxxxxxn-yy

The "x"s represent a sequence of numbers unique to each TSP authorization code and the "n" is a one character alphanumeric check digit. The first "y" contains the provisioning priority level assignment and the second "y" contains the restoration priority level assignment.

(C) Provisioning Priority

If the customer requires service within a shorter time interval than the Telephone Company can provide, and the requested service qualifies for NSEP, the customer may elect to invoke NSEP Treatment and obtain the appropriate provisioning priority assignment from the TSP Program Office. Acceptable assignment code values are: E, 1, 2, 3, 4, 5 or 0.

The assignment of the value "E" denotes Emergency Provisioning and implies the service has the most critical provisioning requirements and the Telephone Company will respond accordingly. The Telephone Company will take immediate action to provide the requested service at the earliest possible date. Rates and charges associated with "E" provisioning are as specified in Section 6.4(G)(2)(a).

© 2022 Frontier Communications Parent, Inc. All rights reserved

6. MISCELLANEOUS SERVICES (Cont'd)

6.4 Telecommunications Service Priority (TSP) System (Cont'd)

(C) Provisioning Priority (Cont'd)

The assignment values of 1, 2, 3, 4 and 5 are treated as essential service priorities and the Company will adjust its available resources to meet the customer's requested due date. Rates and charges associated with invoking this priority treatment are specified in Section 6.4(G)(2)(b). The value "0" implies no provisioning priority.

Restoration Priority

A TSP authorization code for restoration priority classifies the service as being among the nation's most important NSEP telecommunications services. The Company will restore these services before services without restoration priority assignments in the order of priority assignments. Acceptable values are: 1, 2, 3, 4, 5 or 0 with the value "1" being the highest priority.

When the Company recognizes a TSP as being out of service, unusable or receives a trouble report, available resources will be dispatched to restore the service as quickly as practicable. A priority value of 1, 2 or 3 requires dispatch outside normal business hours if necessary to restore the service. A priority value of 4 or 5 only requires dispatch outside of normal business hours if the next business day is more than 24 hours away. If the value "0" has been assigned, then no restoration priority is applicable to this service.

The minimum period for service is one month.

(E) Obligations of the Customer

(1) In all instances, the customer is responsible for obtaining the appropriate TSP authorization code and providing that code to the Telephone Company.

(2) The TSP System service customer must also be the customer for the FIA with which TSP service is associated. Only the customer or its authorized agent as indicated in a letter of agency on file with the Telephone Company is allowed to order TSP System service.

(3) All points of a multipoint service configuration must have the same restoration priority assignment and must satisfy the requirements of that assignment.

(4) In obtaining TSP System service, the customer consents to the release of certain information by the Telephone Company to the federal government in order to maintain and administer the TSP System. Such information includes: the customer's name, telephone number and mailing address, the TSP authorization code and the circuit or service ID number associated with the NSEP service.

(5) The Telephone Company will attempt to notify the customer of expected charges. The customer when invoking NSEP Treatment, recognizes that quoting charges and obtaining permission beforehand may not be practicable and may cause unnecessary delays and, as a result, grants the Telephone Company the right to quote and bill charges after provisioning of the service.

(6) During certain emergencies, the customer may request TSP assignments verbally and the Telephone Company will accept such verbal notification. The customer must submit a written order (ASR) to the Telephone Company within two working days following the verbal request. If the written order (ASR) is not received within two working days, all applicable rates and charges accumulated to date to provision TSP System service, become immediately due and payable and the requested TSP priority is revoked.

© 2022 Frontier Communications Parent, Inc. All rights reserved

6. MISCELLANEOUS SERVICES (Cont'd)

6.4 Telecommunications Service Priority (TSP) System (Cont'd)

(E) Obligations of the Customer (Cont'd)

(7) The customer must request and justify revalidation of all priority level assignments at least every three years.

(8) Additionally, the NCS Manual M 3-1-1, "Telecommunications Service Priority (TSP) System for National Security Emergency Preparedness (NSEP) Service User Manual", prescribes specific conditions which warrant NSEP Treatment and related procedures.

(F) Obligations of the Telephone Company

(1) The Telephone Company will allocate resources to ensure best efforts to provide NSEP services by the time required.

(2) The Telephone Company will work TSP System services in the order of their priority level assignments. The priority sequence is as follows:

- Restore NSEP services assigned restoration priority 1
- Provision Emergency (E) NSEP services
- Restore NSEP services assigned restoration priority 2, 3, 4 or 5
- Provision NSEP services assigned provisioning priority 1, 2, 3, 4 or 5.

(3) The Telephone Company will work cooperatively with other providers of NSEP service when only a portion is provided by the Telephone Company to ensure "end-to-end" service.

(4) Additionally, TSP System service will be provided in accordance with the guidelines set forth in NCS Handbook H 3-1-2, "Telecommunications Service Priority (TSP) System for National Security Emergency Preparedness (NSEP) Service Vendor Handbook".

(G) Rates and Charges

The following rates and charges are in addition to all other rates and charges that may apply for other services offered under this Guide which operate in conjunction with the TSP System.

(1) Establishment of TSP System Service

The establishment of TSP System service charge is a nonrecurring charge (NRC) specified in Section 6.4(G)(4) which applies when a FIA is ordered with provisioning and/or restoration priority. If both are ordered at the same time, only one NRC is applicable. The NRC is also applicable for orders changing priority levels.

© 2022 Frontier Communications Parent, Inc. All rights reserved

6. MISCELLANEOUS SERVICES (Cont'd)

6.4 Telecommunications Service Priority (TSP) System (Cont'd)

(G) Rates and Charges (Cont'd)

(2) Provisioning Priority

There are two basic levels of priority provisioning, Emergency (provisioning priority "E") and Essential (provisioning priority 1, 2, 3, 4 or 5).

(a) Emergency Provisioning

The Telephone company will take immediate action to provide the requested service at the earliest possible date. The rates and charges for Special Construction as set forth in Section 3.1.3 preceding may apply.

(b) Essential Provisioning

The Telephone Company will adjust its available resources to meet the customers requested due date. The rates and charges will apply as set forth in Section 3.2.2(E).

(3) Restoration Priority

Restoration Priority is a monthly rate per circuit for the ongoing administration and maintenance of the TSP System. rates are specified in Section 6.4(G)(5).

© 2022 Frontier Communications Parent, Inc. All rights reserved

6. MISCELLANEOUS SERVICES (Cont'd)

6.4 Telecommunications Service Priority (TSP) System (Cont'd)

(G) Rates and Charges (Cont'd)

(4) Establishment of TSP System Service Charge

Jurisdiction	Nonrecurring Charge Per Circuit	
California-WC	14.50	(D)
Illinois	14.50	
Indiana	14.50	
Michigan	14.50	
N Carolina	14.50	
Ohio	14.50	(D)
S Carolina	14.50	(D)
Wisconsin	14.50	

© 2022 Frontier Communications Parent, Inc. All rights reserved

6. MISCELLANEOUS SERVICES (Cont'd)

6.4 Telecommunications Service Priority (TSP) System (Cont'd)

(G) Rates and Charges (Cont'd)

(5) Restoration Priority Rates

Jurisdiction	Monthly Rates Per Circuit	
California-WC	4.90	(D)
Illinois	4.90	
Indiana	4.90	
Michigan	4.90	
N Carolina	4.90	
Ohio	4.90	(D)
S Carolina	4.90	(D)
Wisconsin	4.90	

© 2022 Frontier Communications Parent, Inc. All rights reserved

6. MISCELLANEOUS SERVICES (Cont'd)

6.5 Reserved

© 2022 Frontier Communications Parent, Inc. All rights reserved

6. MISCELLANEOUS SERVICES (Cont'd)

6.5 Reserved

© 2022 Frontier Communications Parent, Inc. All rights reserved

6. MISCELLANEOUS SERVICES (Cont'd)

6.5 Reserved

© 2022 Frontier Communications Parent, Inc. All rights reserved

6. MISCELLANEOUS SERVICES (Cont'd)

6.5 Reserved

© 2022 Frontier Communications Parent, Inc. All rights reserved

6. MISCELLANEOUS SERVICES (Cont'd)

6.5 Reserved

© 2022 Frontier Communications Parent, Inc. All rights reserved

6. MISCELLANEOUS SERVICES (Cont'd)

6.5 Reserved

© 2022 Frontier Communications Parent, Inc. All rights reserved

6. MISCELLANEOUS SERVICES (Cont'd)

6.5 Reserved

© 2022 Frontier Communications Parent, Inc. All rights reserved

6. MISCELLANEOUS SERVICES (Cont'd)

6.5 Reserved

© 2022 Frontier Communications Parent, Inc. All rights reserved

6. MISCELLANEOUS SERVICES (Cont'd)

6.5 Reserved

© 2022 Frontier Communications Parent, Inc. All rights reserved

6. MISCELLANEOUS SERVICES (Cont'd)

6.5 Reserved

© 2022 Frontier Communications Parent, Inc. All rights reserved

6. MISCELLANEOUS SERVICES (Cont'd)

6.6 Additional Testing

The Telephone Company will perform acceptance testing as specified in 5.1.5 preceding to insure that FIA ordered by the customer are functioning properly, prior to turning over such FIA to the customer.

Testing offered under this section of the tariff is in addition to those tests described above and will be provided, when requested by the customer, at an additional charge.

Testing is provided by Telephone Company personnel at Telephone Company locations. However, provisions are made in 6.6(A)(5) and 6.6(B)(2) following, to allow a customer to request Telephone Company personnel to perform testing at the customer designated location or the end user premises.

Additional testing is provided on a scheduled or nonscheduled basis. Scheduled testing shall be performed on a predetermined time basis to allow for cost efficient utilization of Telephone Company and customer resources. Scheduled testing should be based on a one year period. Nonscheduled tests are performed by the Telephone Company on a request-by-request basis, not in conjunction with any fixed schedule.

The offering of testing under this section of the tariff is made subject to the availability of the necessary qualified personnel and test equipment at the various test locations mentioned in (A), (B), and (C) following.

© 2022 Frontier Communications Parent, Inc. All rights reserved

© 2022 Frontier Communications Parent, Inc. All rights reserved

6. MISCELLANEOUS SERVICES (Cont'd)

6.6 Additional Testing (Cont'd)

© 2022 Frontier Communications Parent, Inc. All rights reserved

6. MISCELLANEOUS SERVICES (Cont'd)

6.6 Additional Testing (Cont'd)

© 2022 Frontier Communications Parent, Inc. All rights reserved

6. MISCELLANEOUS SERVICES (Cont'd)

6.6 Additional Testing (Cont'd)

© 2022 Frontier Communications Parent, Inc. All rights reserved

6. MISCELLANEOUS SERVICES (Cont'd)

6.6 Additional Testing (Cont'd)

.

(B) Special Access Testing

The Telephone Company will, at the request of a customer, provide assistance in performing specific tests requested by the customer, however, the Telephone Company will only perform maintenance testing for its facilities within the LATA.

(1) Additional Cooperative Acceptance Testing

When a customer provides a technician at its customer designated location or at the end user premises, with suitable test equipment to perform the required tests, the Telephone Company will provide a technician at its office for the purpose of conducting Additional Cooperative Acceptance Testing (ACAT). The labor charges as set forth in 6.2(G) preceding will apply to ACAT at the appropriate Basic, Overtime, or Premium rate.

Additional Cooperative Acceptance Testing charges will apply when the customer requests tests which are not required to meet the transmission performance parameters as set forth in the GTE Technical Interface Reference Manual.

(2) Nonscheduled Testing

When a customer provides a technician at its customer designated location or at the end user premises, with suitable test equipment to perform the required tests, the Telephone Company will provide a technician at its office (cooperative testing) for the purpose of conducting Nonscheduled Testing (NST). Nonscheduled testing may consist of any test (e.g., loss, noise, slope, envelope delay, etc.) which the customer may request. If such testing indicates trouble in Telephone Company facilities, then the customer will not be charged. NST charges will apply if the trouble is in the facilities of the customer. At the customer's request, the Telephone Company will provide a technician at the customer designated location or at the end user premises (manual testing). The labor charges as set forth in 6.2(G) preceding will apply to Nonscheduled Testing at the appropriate Basic, Overtime, or Premium rate.

© 2022 Frontier Communications Parent, Inc. All rights reserved

6. MISCELLANEOUS SERVICES (Cont'd)

6.6 Additional Testing (Cont'd)

(B) Special Access Testing (Cont'd)

(3) Obligation of the Customer

When the customer the customer shall make the facilities to be tested available to the Telephone Company at times mutually agreed upon.

© 2022 Frontier Communications Parent, Inc. All rights reserved

6. MISCELLANEOUS SERVICES (Cont'd)

6.6 Additional Testing (Cont'd)

(C) Rates and Charges

(1) Automatic Scheduled Testing

Jurisdiction	Basic Offering to First Point of Switching Per Transmission Path, Per Month Rate	
California-WC	.45	(D)
Illinois	.45	
Indiana	.45	
Michigan	.45	
N Carolina	.45	
Ohio	.45	(D)
S Carolina	.45	(D)
Wisconsin	.45	

© 2022 Frontier Communications Parent, Inc. All rights reserved

6. MISCELLANEOUS SERVICES (Cont'd)

6.6 Additional Testing (Cont'd)

(C) Rates and Charges

(2) Additional Cooperative Scheduled Testing

Jurisdiction	Basic Offering to First Point of Switching Per Transmission Path, Per Month Rate	
California-WC	1.69	(D)
Illinois	1.48	
Indiana	1.41	
Michigan	1.51	
N Carolina	1.62	
Ohio	1.39	(D)
S Carolina	1.62	(D)
Wisconsin	1.56	

© 2022 Frontier Communications Parent, Inc. All rights reserved

6. MISCELLANEOUS SERVICES (Cont'd)

6.6 Additional Testing (Cont'd)

(C) Rates and Charges (Cont'd)

(2) Additional Cooperative Scheduled Testing (Cont'd)

Jurisdiction	Basic Offering to First Point of Switching Per Transmission Path, Per Month Rate	
California-WC	.72	(D)
Illinois	.63	
Indiana	.60	
Michigan	.64	
N Carolina	.69	
Ohio	.59	(D)
S Carolina	.69	(D)
Wisconsin	.67	

© 2022 Frontier Communications Parent, Inc. All rights reserved

6. MISCELLANEOUS SERVICES (Cont'd)

6.6 Additional Testing (Cont'd)

(C) Rates and Charges (Cont'd)

(3) Additional Manual Scheduled Testing

Jurisdiction	Basic Offering to First Point of Switching Per Transmission Path, Per Month Rate	
California-WC	3.37	(D)
Illinois	2.97	
Indiana	2.82	
Michigan	3.02	
N Carolina	3.23	
Ohio	2.78	(D)
S Carolina	3.23	(D)
Wisconsin	3.13	

© 2022 Frontier Communications Parent, Inc. All rights reserved

6. MISCELLANEOUS SERVICES (Cont'd)

6.6 Additional Testing (Cont'd)

(C) Rates and Charges (Cont'd)

(3) Additional Manual Scheduled Testing (Cont'd)

Jurisdiction	Basic Offering to First Point of Switching Per Transmission Path, Per Month Rate	
California-WC	1.43	(D)
Illinois	1.26	
Indiana	1.20	
Michigan	1.29	
N Carolina	1.37	
Ohio	1.18	(D)
S Carolina	1.37	(D)
Wisconsin	1.33	

© 2022 Frontier Communications Parent, Inc. All rights reserved

6. MISCELLANEOUS SERVICES (Cont'd)

6.7 End User/Agent Lists

(A) (Reserved for Future Use)

© 2022 Frontier Communications Parent, Inc. All rights reserved

6. MISCELLANEOUS SERVICES (Cont'd)

6.7 End User/Agent Lists (Cont'd)

(B) (Reserved for Future Use)

(C) Snapshot List

The Snapshot List is a summary of selected end user and agent information for specific IC which resides in the Telephone Company customer data base. The snapshot List will be provided by electronic transmission at rates provided in 6.7.1(B). Foreign listings, PBX stations, CU centrex stations and numbers not in service will not be provided.

The Snapshot List will be provided to the IC no later than 30 days after receipt of the order. The nonrecurring charge for the Snapshot List applies per state per order.

The purpose, liability and objectives associated with the provision of the Snapshot List is as follows:

(1) The IC agrees to use the Snapshot List for the purpose of either contacting potential customers/agents, or existing customers/agents, regarding interexchange telecommunications services available through equal access to be obtained from the Telephone Company or for the purpose of updating IC customer/agent account information. The IC agrees not to sell, or reproduce in any manner, in whole or in part, the lists or permit such to be done.

(2) The IC shall indemnify, protect and save harmless the Telephone Company from and against any and all loss, liability, damages and expense arising out of any demand, claim, suit or judgment for damages which may arise out of the Telephone Company's supplying of listing information, services or records.

(3) The Telephone Company and the IC agree that the mutual objective of the parties is to conduct their respective businesses to avoid confusion by the end users and agents as to the separate and independent identity of the respective companies and their services. Neither the Telephone Company nor the IC shall make any representation to end users, the public, prospective advertisers, expressed or implied, written or oral, which would imply that the IC is the same as, a part of, or associated with the Telephone Company.

(4) This service may be terminated by either the Telephone Company or the IC upon thirty (30) days' written notice or as specified in 2.1.8. The Telephone Company reserves the right to terminate this service immediately upon written notice if the IC misuses the list information. Performance by the Telephone Company shall be excused in the event of strike, riot, act of God or any other cause beyond the reasonable control of the Telephone Company.

© 2022 Frontier Communications Parent, Inc. All rights reserved

6. MISCELLANEOUS SERVICES (Cont'd)

6.7 End User/Agent Lists (Cont'd)

(Reserved for Future Use)

© 2022 Frontier Communications Parent, Inc. All rights reserved

6. MISCELLANEOUS SERVICES (Cont'd)

6.7 End User/Agent Lists (Cont'd)

6.7.1 Rates and Charges

(A) (Reserved for Future Use)

© 2022 Frontier Communications Parent, Inc. All rights reserved

6. MISCELLANEOUS SERVICES (Cont'd)

6.7 End User/Agent Lists (Cont'd)

6.7.1 Rates and Charges (Cont'd)

(B) Snapshot List

Jurisdiction	Nonrecurring Charge Per State Per Order	Snapshot List Per Listing*	
California-WC	75.00	.00	(D)
Illinois	75.00	.05	
Indiana	75.00	.05	
Michigan	75.00	.05	
N Carolina	75.00	.05	
Ohio	75.00	.05	(D)
S Carolina	75.00	.05	(D)
Wisconsin	75.00	.05	

* For the purpose of the Snapshot list, a listing is defined as an end user or agent record eligible for a Predesignated Interexchange Carrier Selection.

© 2022 Frontier Communications Parent, Inc. All rights reserved

6. MISCELLANEOUS SERVICES (Cont'd)

6.8 Reserved

© 2022 Frontier Communications Parent, Inc. All rights reserved

6. MISCELLANEOUS SERVICES (Cont'd)

6.8 Reserved

© 2022 Frontier Communications Parent, Inc. All rights reserved

6. MISCELLANEOUS SERVICES (Cont'd)

6.8 Reserved

© 2022 Frontier Communications Parent, Inc. All rights reserved

6. MISCELLANEOUS SERVICES (Cont'd)

6.8 Reserved

© 2022 Frontier Communications Parent, Inc. All rights reserved

6. MISCELLANEOUS SERVICES (Cont'd)

6.9 Denial/Restoral Service

The Telephone Company will, upon request, provide Denial/Restoral service to ICs for those end users that have designated the IC as their primary interexchange carrier. Conditions regarding refusal or discontinuance of Denial/Restoral service are set forth in 2.1.8.

(A) Denial/Restoral service provides for Telephone Company notification to an IC that an end user's local exchange service has been temporarily suspended due to non-payment of the end user's local exchange service. Subsequently, the Telephone Company will provide notification to the IC if the end user's service has been restored from temporary suspension.

(B) Notification shall be provided via the Customer Acco9unt Record Exchange electronic interface.

(C) The IC agrees to abide by all applicable rules, decisions, orders, statues and laws concerning the disclosure of published and nonpublished telephone numbers, and further agrees to use the information provided by Denial/Restoral service only for the purposes of billing services provided to their end users.

A charge in (E) will apply to the IC for each notification per end user local telephone exchange service number provided to the IC.

(E) Denial/Restoral Service
- per telephone number provided $.10

6.10 Reserved

6.11 Reserved

© 2022 Frontier Communications Parent, Inc. All rights reserved

6. MISCELLANEOUS SERVICES (Cont'd)

6.12 Reserved

© 2022 Frontier Communications Parent, Inc. All rights reserved

6. MISCELLANEOUS SERVICES (Cont'd)

6.12 Reserved

© 2022 Frontier Communications Parent, Inc. All rights reserved

6. MISCELLANEOUS SERVICES (Cont'd)

6.13 Reserved

© 2022 Frontier Communications Parent, Inc. All rights reserved

6. MISCELLANEOUS SERVICES (Cont'd)

6.13 Reserved

© 2022 Frontier Communications Parent, Inc. All rights reserved

6. MISCELLANEOUS SERVICES (Cont'd)

6.14 Reserved

(A) End users subscribing to Integrated Services Digital Network-Basic Rate Interface (ISDN BRI) and Integrated Services Digital Network-Primary Rate Interface (ISDN PRI) will be assessed an ISDN Line Port Charge.

When end user ISDN BRI or ISDN PRI is provided by a local service provider that resells local service (reseller), the reseller will be assessed the ISDN Line Port charge.

© 2022 Frontier Communications Parent, Inc. All rights reserved

6. MISCELLANEOUS SERVICES (Cont'd)

6.14 Reserved

© 2022 Frontier Communications Parent, Inc. All rights reserved

6. MISCELLANEOUS SERVICES (Cont'd)

6.15 Reserved

© 2022 Frontier Communications Parent, Inc. All rights reserved

6. MISCELLANEOUS SERVICES (Cont'd)

6.15 Reserved

© 2022 Frontier Communications Parent, Inc. All rights reserved

6. MISCELLANEOUS SERVICES (Cont'd)

6.15 Reserved

© 2022 Frontier Communications Parent, Inc. All rights reserved

6. MISCELLANEOUS SERVICES (Cont'd)

6.16 Reserved

© 2022 Frontier Communications Parent, Inc. All rights reserved

6. MISCELLANEOUS SERVICES (Cont'd)

6.17 DS1 Span Power

When DS1 Service, provided over metallic facilities, is connected to customer-provided optical high voltage protection equipment, the Telephone Company will provide upon request, DS1 span power from the CO to the CPE electrical-to-optical converter, at the point of termination.

	NRC	MRC
Telephone Company provided DS1 Span Power	$340.00	$71.00

© 2022 Frontier Communications Parent, Inc. All rights reserved

FACILITIES FOR INTERSTATE ACCESS

7. SPECIALIZED FIA OR ARRANGEMENTS

7.1 General

Specialized FIA or Arrangements may be provided by the Telephone Company, at the request of a customer, on an Individual Case Basis (ICB) if such FIA or arrangements meet the following criteria:

- The requested FIA or arrangements are not offered under other sections of this Guide.
- The facilities utilized to provide the requested FIA or arrangements are of a type normally used by the Telephone Company in furnishing its other services.
- The requested FIA or arrangements are provided within a Market Area.
- The requested FIA or arrangements are compatible with other Telephone Company services, facilities, and its engineering and maintenance practices.

This offering is subject to the availability of the necessary Telephone Company personnel and capital resources.

7.2 Rates and Charges

(Reserved)

© 2022 Frontier Communications Parent, Inc. All rights reserved

8. RESERVED FOR FUTURE USE

© 2022 Frontier Communications Parent, Inc. All rights reserved

9. SPECIAL FACILITIES ROUTING OF FIA

9.1 Description of Special Facilities Routing of FIA

The FIA provided under this Guide are provided over such routes and facilities as the Telephone Company may elect. Special routing is involved where, in order to comply with requirements specified by the customer, the Telephone Company provides Special Access in a manner which includes one or more of the following conditions.

9.1.1 Diversity

Where two or more FIA must be provided over not less than two different physical routes. Diversity is a Basic Service Element (BSE) under the Telephone Company's Open Network Architecture (ONA) plan.

9.1.2 Avoidance

Where a FIA must be provided on a route which avoids specified geographical locations.

9.1.3 Cable-Only Facilities

Where certain voice grade FIA are provided on cable-only facilities to meet the particular needs of a customer. FIA is provided subject to the availability of cable-only facilities. In the event of FIA failure, restoration will be made through the use of any available facilities as selected by the Telephone Company.

Avoidance and Diversity are available on Special Access as set forth in Section 5. Cable-only facilities are available for voiceband Special Access as set forth in 5.2.1.

In order to identify any special routing requirement, the Telephone Company will provide the ordering customer with the required routing information for each specially routed FIA. If requested by the customer, this information will be provided when the FIA is installed and prior to any subsequent change in routing.

The rates and charges for Special Facilities Routing of FIA as set forth in 9.2 are in addition to all other rates and charges that may be applicable for FIA provided under other sections of this Guide.

© 2022 Frontier Communications Parent, Inc. All rights reserved

9. SPECIAL FACILITIES ROUTING OF FIA (Cont'd)

9.2 Rates and Charges

The rates and charges for Special Facilities Routing of FIA are as follows:

9.2.1 Diversity

For each FIA provided in accordance with 9.1.1 preceding, the rates and charges will be developed on an Individual Case Basis

© 2022 Frontier Communications Parent, Inc. All rights reserved

9. SPECIAL FACILITIES ROUTING OF FIA (Cont'd)

9.2 Rates and Charges (Cont'd)

9.2.1 Diversity (Cont'd)

© 2022 Frontier Communications Parent, Inc. All rights reserved

9. SPECIAL FACILITIES ROUTING OF FIA (Cont'd)

9.2 Rates and Charges (Cont'd)

9.2.1 Diversity (Cont'd)

© 2022 Frontier Communications Parent, Inc. All rights reserved

9. SPECIAL FACILITIES ROUTING OF FIA (Cont'd)

9.2 Rates and Charges (Cont'd)

9.2.1 Diversity (Cont'd)

© 2022 Frontier Communications Parent, Inc. All rights reserved

9. SPECIAL FACILITIES ROUTING OF FIA (Cont'd)

9.2 Rates and Charges (Cont'd)

9.2.2 Avoidance

For each FIA provided in accordance with 9.1.2 preceding, the rates and charges will be developed on an Individual Case Basis

© 2022 Frontier Communications Parent, Inc. All rights reserved

9. SPECIAL FACILITIES ROUTING OF FIA (Cont'd)

9.2 Rates and Charges (Cont'd)

9.2.3 Diversity and Avoidance Combined

For each FIA provided in accordance with 9.1.1 and 9.1.2 combined, the rates and charges will be developed on an Individual Case Basis

© 2022 Frontier Communications Parent, Inc. All rights reserved

9. SPECIAL FACILITIES ROUTING OF FIA (Cont'd)

9.2 Rates and Charges (Cont'd)

9.2.4 Cable-Only Facilities

For each FIA provided in accordance with 9.1.3 preceding, the rates and charges will be developed on an Individual Case Basis

© 2022 Frontier Communications Parent, Inc. All rights reserved

10. RESERVED FOR FUTURE USE

© 2022 Frontier Communications Parent, Inc. All rights reserved

11. RESERVED FOR FUTURE USE

© 2022 Frontier Communications Parent, Inc. All rights reserved

12. RESERVED FOR FUTURE USE

© 2022 Frontier Communications Parent, Inc. All rights reserved

13. RESERVED FOR FUTURE USE

© 2022 Frontier Communications Parent, Inc. All rights reserved

14. EXCEPTIONS TO FIA OFFERINGS

14.1 General

The FIA/Services offered under the provisions of this Guide are subject to availability as set forth in 2.1.4 preceding. In addition, FIA/Services are not offered in the operating territory of the following companies:

14.1.1 Citizens Telecommunications Company of California, Inc.
Special Access - Temporary Videoband Services

(D)
(D)
(D)
(D)
(D)
(D)

© 2022 Frontier Communications Parent, Inc. All rights reserved

15. RESERVED FOR FUTURE USE

© 2022 Frontier Communications Parent, Inc. All rights reserved.

16. ADVANCED COMMUNICATIONS NETWORKS (Cont'd)

16.1 (A) General

This section contains the rules and regulations pertaining to the provision of Packet Switching Network Service **. The regulations and rates specified herein are in addition to the applicable regulations and rates specified in other sections of this Guide.

The following is a list of the Telephone Company's Open Network Architecture (ONA) Packet Service Basic Service Elements (BSEs) which provide a cross-reference to the generic ONA product names.

(B)

Generic Name	The Company
Fast Select Acceptance - Packet	Fast Select
Fast Select Request - Packet	Fast Select

(C) Administrative Changes

Administrative changes to existing service will be made without charge(s) to the customer. Administrative changes are as follows:

- Change of customer name, i.e., the customer or record does not change but rather the name of record changes its name, e.g., XYZ Company to XYZ Communications,
- Change of customer premises address when the change of address is not a result of a physical relocation of facilities.
- Change in billing data (name, address, or contact name or telephone number),
- Change of customer contact name or telephone number, and
- Change of customer service element identification.
- Change of jurisdiction involving no physical changes to the service.

** Effective November 19, 2005, this service is no longer available to any customer who is not a customer as of November 19, 2005. Effective November 19, 2005, existing customers may not make additions, moves or changes to this service or submit any new orders for this service.

© 2022 Frontier Communications Parent, Inc. All rights reserved.

16. ADVANCED COMMUNICATIONS NETWORKS (Cont'd)

16.1 (Cont'd)

Moves

A move involves a change in the physical location of the point of termination of service. A move normally involves an interruption of service for the period required to complete the move. No credit allowance will be granted for that period. Special Construction as set forth in Section 3.1.3 preceding may also be applicable at the different CDL.

A customer may request that service not be interrupted during a move. To comply with that request, it may be necessary to install a duplicate service, and subsequently discontinue the existing service. Charges, monthly and nonrecurring, will apply for the duplicate service. A new minimum period will be established for the duplicate portion of the service, depending on which end of the service is moved. The customer will remain responsible for all minimum period charges associated with the corresponding portion of the disconnected service.

The charge for the move depends on whether the move is within the same CDL or to a different CDL.

(1) Same CDL

When the move of a termination of FIA, as defined in Section 2.1.5, is to a new point within the same CDL (same address and/or same building), the charge for the move will be the installation charge for the portion of the service being reterminated. There will be no change in the minimum period requirements. For services subject to payment plan regulations, the same payment period will remain in force.

© 2022 Frontier Communications Parent, Inc. All rights reserved.

16. ADVANCED COMMUNICATIONS NETWORKS (Cont'd)

16.1 Moves (Cont'd)

(2) Different CDL

(a) When the move is to a different CDL (different address and different building), except as specified below, it will be treated as a disconnect and an installation of service. The appropriate service installation charge for the service termination(s) affected will apply. A new minimum period will be established for the installed service. The customer will remain responsible for all minimum period charges associated with the disconnected service. For services subject to payment plan regulations, a new payment plan will be established and full assessment of the remaining liabilities will be applicable.

(b) When the move is to a different CDL but served by the same serving wire center, the following conditions apply:

- A change ASR will be required.
- The appropriate service installation charge for the service termination(s) will apply.
- For services subject to payment plan regulations, if the customer of record remains the same with no lapse in service, the appropriate NRCs for changes will apply. Otherwise, the move will be treated as a disconnect and an installation of service and all appropriate NRCs and full assessment of the remaining liabilities will be applicable.

16.2 Packet Switching Network Service *

(A) Service Description

Packet Switching Network Service uses packet switching technology to provide a switched data transport service. This service uses analog and digital facilities to provide usage-sensitive data transport for a variety of interactive (or bursty) data applications between two or more customer designated locations (CDLs). The packet switch will be classified as a CDL.

Packet switching technology divides data streams into packets. The packet network examines, routes and transports packets individually without maintaining a physical path between bursts of data. This service is based on CCITT (Consultative Committee on International Telegraphy and Telephony) X.25 protocol and X.75 internetworking protocol. The X.25 and X.75 protocols are international standards developed by the CCITT that provide the foundation for Public Packet Switched Networks. Packet Switching Network Service and features are available where facilities and conditions permit.

(B) Service Provisioning

Customers may access the Packet Switching Network through an X.75 internetworking access.

Packet switching carriers with a Data Network Identification Code may interconnect to an access port on the Packet Switching Network with X.75 protocol at transmission speeds of 9.6 Kbps or 56 Kbps. Each X.75 access will require an X.75 Access Port charge, a DDS Special Access Line charge (9.6 Kbps or 56 Kbps) and associated DDS Special Transport charges set forth in Section 5.

The Special Access Line and Special Transport charges provide analog or digital connections from the packet carrier's location to the access port on the Telephone Company's packet network. Shared use (ratcheting) to provision the access connection is not permitted.

The special access service associated with packet switching will be subject to the meet point billing requirements set forth in Section 2. However, all packet usage recorded at the Telephone Company's packet switch will be billed by the Telephone Company.

- Effective November 19, 2005, this service is no longer available to any customer who is not a customer as of November 19, 2005. Effective November 19, 2005, existing customers may not make additions, moves or changes to this service or submit any new orders for this service.

© 2022 Frontier Communications Parent, Inc. All rights reserved.

16. ADVANCED COMMUNICATIONS NETWORKS (Cont'd)

16.2 Packet Switching Network Service * (Cont'd)

(C) Rate Regulations

(1) Minimum Period

The minimum service period is one month.

(2) Rate Application

(a) The monthly rates are flat-rated and are applied based on the speed and number of logical channels subscribed to per access port.

(b) Monthly rates for logical channels subscribed to will apply in addition to the monthly recurring charges for X.75 access. Rates applicable for X.75 access include a monthly recurring rate and an installation charge per X.75 access port, and are specified under Section 16.2(F)(1). A DDS Special Access Line charge (9.6 Kbps or 56 Kbps) and associated DDS Special Transport from Section 5 will also apply.

* Effective November 19, 2005, this service is no longer available to any customer who is not a customer as of November 19, 2005. Effective November 19, 2005, existing customers may not make additions, moves or changes to this service or submit any new orders for this service.

© 2022 Frontier Communications Parent, Inc. All rights reserved.

16. ADVANCED COMMUNICATIONS NETWORKS (Cont'd)

16.2 Packet Switching Network Service * (Cont'd)

Supplemental Features

(1) Fast Select allows a sending data terminal to forward up to 128 bytes of data along with call setup and clearing packets. This feature is available to all customers and is initiated on a call-by-call basis.

(2) Priority allows a customer to establish a "priority" status to the customer's data as it processes through the network. This feature is available to all customers and is initiated on a call-by-call basis.

(E) (Reserved for Future Use)

* Effective November 19, 2005, this service is no longer available to any customer who is not a customer as of November 19, 2005. Effective November 19, 2005, existing customers may not make additions, moves or changes to this service or submit any new orders for this service.

© 2022 Frontier Communications Parent, Inc. All rights reserved.

16. ADVANCED COMMUNICATIONS NETWORKS (Cont'd)

16.2 Packet Switching Network Service * (Cont'd)

(F) Rates and Charges

(1) X.75 Access, Per Port

Jurisdiction	Nonrecurring Charge 9.6 Kbps/56 Kbps	Monthly Rate 9.6 Kbps	Monthly Rate 56 Kbps	
California-WC	NA	NA	NA	(D)
Illinois	100.00	75.00	130.00	
Indiana	100.00	75.00	130.00	
Michigan	NA	NA	NA	
N Carolina	100.00	75.00	130.00	
Ohio	100.00	75.00	130.00	(D)
S Carolina	NA	NA	NA	(D)
Wisconsin	NA	NA	NA	

* Effective November 19, 2005, this service is no longer available to any customer who is not a customer as of November 19, 2005. Effective November 19, 2005, existing customers may not make additions, moves or changes to this service or submit any new orders for this service.

© 2022 Frontier Communications Parent, Inc. All rights reserved

16. ADVANCED COMMUNICATIONS NETWORKS (Cont'd)

16.2 Packet Switching Network Service * (Cont'd)

(F) Rates and Charges (Cont'd)

(2) 9.6 Kbps Port

(Jurisdiction)	12 Logical Channels Monthly Rate	22 Logical Channels Monthly Rate	32 Logical Channels Monthly Rate	
California-WC	NA	NA	NA	(D)
Illinois	48.00	88.00	128.00	
Indiana	48.00	88.00	128.00	
Michigan	NA	NA	NA	
N Carolina	48.00	88.00	128.00	
Ohio	48.00	88.00	128.00	(D)
S Carolina	NA	NA	NA	(D)
Wisconsin	NA	NA	NA	

* Effective November 19, 2005, this service is no longer available to any customer who is not a customer as of November 19, 2005. Effective November 19, 2005, existing customers may not make additions, moves or changes to this service or submit any new orders for this service.

© 2022 Frontier Communications Parent, Inc. All rights reserved

16. ADVANCED COMMUNICATIONS NETWORKS (Cont'd)

16.2 Packet Switching Network Service * (Cont'd)

(F) Rates and Charges (Cont'd)

(2) 56 Kbps Port

Jurisdiction	32 Logical Channels Monthly Rate	60 Logical Channels Monthly Rate	90 Logical Channels Monthly Rate	
California-WC	NA	NA	NA	(D)
Illinois	128.00	240.00	360.00	
Indiana	128.00	240.00	360.00	
Michigan	NA	NA	NA	
N Carolina	128.00	240.00	360.00	
Ohio	128.00	240.00	360.00	(D)
S Carolina	NA	NA	NA	(D)
Wisconsin	NA	NA	NA	

* Effective November 19, 2005, this service is no longer available to any customer who is not a customer as of November 19, 2005. Effective November 19, 2005, existing customers may not make additions, moves or changes to this service or submit any new orders for this service.

© 2022 Frontier Communications Parent, Inc. All rights reserved

16. ADVANCED COMMUNICATIONS NETWORKS (Cont'd)

16.2 Packet Switching Network Service * (Cont'd)

(F) Rates and Charges (Cont'd)

(3) Supplemental Features

Jurisdiction	Fast Select Per Virtual Connection	Priority Per Kilosegment	
California-WC	NA	NA	(D)
Illinois	.001	.35	
Indiana	.001	.35	
Michigan	NA	NA	
N Carolina	.001	.35	
Ohio	.001	.35	(D)
S Carolina	NA	NA	(D)
Wisconsin	NA	NA	

* Effective November 19, 2005, this service is no longer available to any customer who is not a customer as of November 19, 2005. Effective November 19, 2005, existing customers may not make additions, moves or changes to this service or submit any new orders for this service.

© 2022 Frontier Communications Parent, Inc. All rights reserved

17. RESERVED FOR FUTURE USE

© 2022 Frontier Communications Parent, Inc. All rights reserved

18. RESERVED FOR FUTURE USE

© 2022 Frontier Communications Parent, Inc. All rights reserved

19. RESERVED FOR FUTURE USE

© 2022 Frontier Communications Parent, Inc. All rights reserved

20. Ethernet Private Line

(A) General

This section contains the rules and regulations pertaining to the provisioning of SONET Access and Dense Wave Division Multiplexing (DWDM) Service. The regulations and rates specified herein are in addition to the applicable rates and regulations specified in other Sections of this Guide.

This service supports asynchronous bandwidth capacities at 1.5 Mbps and 45 Mbps in addition to synchronous Optical Carrier (OC) bandwidth capacities at OC-3, OC-3c, OC-12, OC-12c, OC-48, OC48c and OC192 bit rates and 1.25 Gbps or 2.5 Gbps wavelengths. The SONET add/drop multiplexer aggregates lesser bit speed services onto the dedicated SONET ring or the two-point SONET circuit configuration.

© 2022 Frontier Communications Parent, Inc. All rights reserved

20. Ethernet Private Line (Cont'd)

(B) Description

Ethernet Private Line is comprised of high speed SONET based and/or DWDM technology providing connectivity at, and transport between, two or more customer designated locations (CDLs). Additionally, certain Ethernet Private Line services provide interconnection between an EIS arrangement and a Telephone Company wire center associated with certain Ethernet Private Line Service or advanced data service*.

(C) Conditions

Ethernet Private Line services are provided where facilities are available with sufficient bandwidth capacity to meet the customer's request.

The customer is responsible for providing all facilities and cabling necessary to connect customer equipment to this interface or to interconnect with the Telephone Company or its services under an EIS arrangement.

The customer will be billed additional charges for any charges levied the Telephone Company for space and power required to place equipment on the company's side of the network interface.

Customer Facility Assignment (CFA) is controlled by the Telephone Company, on all access customer serving wire centers on the IOF and extends to the terminating CDL. Should the customer require control of the facility assignment and order multiplexing on the IOF, the services from the multiplexer to the end user serving wire center will be ordered from Section 5 of this Guide.

It is the customer's responsibility to ensure that the customer's equipment provides industry standard electrical signals compatible with Ethernet Private Line transport transmission. Technical specifications are contained in the following publications:

GR-253-CORE, Issue 4
GR-1400-CORE, Issue 3
GR-1374-CORE, Issue 1
ANSI T1.105.01-2000 (R2005)
ANSI T1.102-1993 (R2005)

* Advanced data services include Telephone Company provided frame relay services, switched multi-megabit services, Internet Protocol services, LAN Extension Services and ATM-cell relay services. Connections to advanced data services are provided by the Telephone Company where such connections are technically and operationally feasible, as determined by the Telephone Company.

© 2022 Frontier Communications Parent, Inc. All rights reserved

20. Ethernet Private Line (Cont'd)

(C) Conditions (Cont'd)

The Company will work cooperatively with the customer during a planning session to insure that the customer orders sufficient Ethernet Private Line bandwidth capacity to satisfy the customer's requirements as well as other applicable Ethernet Private Line services. This planning session must take place prior to an initial Ethernet Private Line ASR.

© 2022 Frontier Communications Parent, Inc. All rights reserved

20. Ethernet Private Line (Cont'd

Application of Rates and Charges

(1) CONNECT

The Connect rate element provides the platform for customer access to the Telephone Company's Optical Network where connection to certain Ethernet Private Line services or advanced data services occur. The Connect rate element provides the link between the CDL or EIS arrangement and the SWC of the CDL or EIS arrangement.

There are three types of Connects:

- Single Route Connect *
- Dual Route Connect *
- CO Connect *
- Custom Connect#
- Express Connect
- Flex Express Connect

(a) Single Route Connect

The Single Route provides a connection to the Telephone Company's wire center(s) via a point-to-point route configuration. The Single Route Connect may be provided as electrical or optical interface in OC bandwidths of OC3, OC12, OC24 or OC48. The Single Route Connect may be ordered as switched or special access.

(b) Dual Route Connect

The Dual Route Connect provides a connection to the Telephone Company's wire center(s) in which the working transmission path traverses a distinct and separate path from the protection transmission path. The Dual Route Connect may be provided as electrical or optical interface in OC bandwidths of OC3, OC12, OC24 or OC48. The Dual Route Connect may be ordered as switched or special access.

(c) Reserved for Future Use

* Grandfathered to existing service effective December 26, 1998.

Service availability limited. Refer to # footnote on Page 20-9.

© 2022 Frontier Communications Parent, Inc. All rights reserved

20. Ethernet Private Line (Cont'd

Application of Rates and Charges (Cont'd)

(1) CONNECT (Cont'd)

(d) CO Connect

The CO Connect provides access to the Telephone Company's Ethernet Private Line platform. The CO Connect is provided at DS3, DS1 and DS0 levels. The appropriate special access line from Section 5 will apply.

When a CO Connect is provided at a DS3 or DS1 level, the customer may order multiplexing, as shown in Section 5, at the end user serving wire center. The customer will be charged for the multiplexing in addition to the CO Connect.

When a CO Connect is ordered at a DS0 level, the customer must request a minimum of a DS1 interface at the IC customer wire center and will be charged for the appropriate payload (i.e., DS1 or DS3) at the IC customer wire center. The CO connect may be ordered as switched or special access.

(e) Reserved for Future Use

(f) Reserved for Future Use

* Grandfathered to existing service effective December 16, 1998.

© 2022 Frontier Communications Parent, Inc. All rights reserved

1.

20. Ethernet Private Line

Application of Rates and Charges (Cont'd)

(1) CONNECT (Cont'd)

(g) Reserved for Future Use

(h) Express Connect #

The Express Connect provides a connection to the Telephone Company's Ethernet Private Line wire center(s) via a ring topology consisting of three nodes, one of which must be a Telephone Company serving wire center. When two of the nodes are customer designated locations, both must be served by the same serving wire center and only one customer location can be without an Express Connect CDL Node. The Express Connect is provided at a bandwidth of OC3, OC12 or OC48 and may be ordered under a one (1) year, three (3) year, five (5) year or seven (7) year Term Payment Plan (TPP).

The Express Connect has three rate elements, a "First System" with optional "Additional System(s) and Additional Express Nodes." The customer may order up to three "Additional Systems" of OC3, OC12, or OC48 bandwidth not to exceed OC12, OC48 or OC192 bandwidth capacity respectively. Rider charges for Express Connect are included in its monthly rate.

The customer may subscribe to Custom Connect Shared Transport, Custom Connect Dedicated Transport or Banded Optical Transport with Express Connect.

The customer may also subscribe to Telephone Company provided banded SONET transport with Express Connect, provided that such connections are technically and operationally feasible, as determined by the Telephone Company.

The Express Connect may be ordered as switched or special access.

Effective August 15, 2009, orders for new Express Connect First Systems, Additional CDL Nodes, and/or Additional CO Nodes are no longer permitted. The Telephone Company will continue to provide Express Connect pursuant to this Section 20 on any existing Express Connect that is in-service as of August 15, 2009, or any order for Express Connect that is placed with the Telephone Company prior to August 15, 2009, (collectively, Existing Express Connect). Changes in bandwidth capacity, moves, and/or rearrangements are not permitted.

© 2022 Frontier Communications Parent, Inc. All rights reserved

20. Ethernet Private Line (Cont'd

Application of Rates and Charges (Cont'd)

(1) CONNECT (Cont'd)

(i) Flex Express Connect #

The Flex Express Connect provides a connection to the Telephone Company's Ethernet Private Line wire center(s) via ring topology with a minimum of four nodes, two of which must be Telephone Company wire centers. When two or more of the nodes are customer designated locations, only one of those nodes may be without a Flex Express CDL Node. The Flex Express Connect is provided at a bandwidth of OC3, OC12 or OC48.

Flex Express Connect is comprised of four rate elements, a "First System" with optional "Additional System(s)", Additional Flex Nodes, and Flex Express Transport. The customer may order up to three "Additional System(s)" of OC3, OC12 or OC48 not to exceed OC12, OC48 or OC192 bandwidth capacity, respectively.

Flex Express Transport is applied to the entire circumference of the service and is measured from the serving wire center of the customer designated location(s) and the CO Nodes. Flex Express Transport is ordered with the "First System" and each "Additional System" Flex Express Connect in OC3, OC12 or OC48 bandwidth not to exceed OC12, OC48 or OC192 bandwidth capacity, respectively.

Effective August 15, 2009, orders for new Flex Express Connect First Systems, Additional CDL Nodes, and/or Additional CO Nodes are no longer permitted. The Telephone Company will continue to provide Flex Express Connect pursuant to this Section 20 on any existing Flex Express Connect that is in-service as of August 15, 2009, or any order for Flex Express Connect that is placed with the Telephone Company prior to August 15, 2009, (collectively, Existing Flex Express Connect). Changes in bandwidth capacity, moves, and/or rearrangements are not permitted.

© 2022 Frontier Communications Parent, Inc. All rights reserved

20. Ethernet Private Line (Cont'd

Application of Rates and Charges (Cont'd)

(1) CONNECT (Cont'd)

(i) Flex Express Connect #

Flex Express may be ordered under a one (1) year, three (3) year or five (5) year or seven (7) year Term Payment Plan (TPP). After the initial order for Flex Express Connect, month-to-month rates shall apply for the additional Flex Nodes. When the TPP of the Flex Express "First System" expires and the customer does not renew the TPP as shown in 20(G)(2), the first Flex Express "Additional System" will assume the Flex Express "First System" rates.

In addition to the Flex Express Connect rate elements, Custom Connect Transport (Transport), as described in 20(1)(j), is applicable for transport from the serving wire centers of the customer designated locations and CO Nodes. Rider charges for Flex Express Connect are included in its monthly rate.

The customer may subscribe to Custom Connect Shared Transport, Custom Connect Dedicated Transport or Banded Optical Transport with Flex Express Connect.

The customer may also subscribe to Telephone Company provided banded SONET transport with Flex Express Connect, provided that such connections are technically and operationally feasible, as determined by the Telephone Company.

Flex Express Connect may be ordered as switched or special access.

(*) Grandfathered to existing service effective December 26, 1998.
Service availability limited. Refer to footnote on Page 20-7

© 2022 Frontier Communications Parent, Inc. All rights reserved

20. Ethernet Private Line (Cont'd)
    Application of Rates and Charges (Cont'd)
    (1) CONNECT (Cont'd)
        (j) Custom Connect#

The Custom Connect provides a connection to the Telephone company's Optical Network and an access customer's designated location (CDL) or EIS arrangement. The Custom Connect is typically comprised of CO Nodes, CDL Links or SONET Premises Nodes, Transport and Riders. Certain configurations involving connection to an advanced data service may not require all of these rate elements. Each Custom Connect must consist of a minimum of two customer designated locations or one customer designated location or EIS arrangement and a wire center where connection to an advanced data service occurs. At least one of the locations must be a CDL Link.

The Custom Connect may be ordered as switched or special access. The Concatenated/Non-concatenated Custom Connect CDL Link is provided with a two fiber network interface. Where technically feasible, the Concatenated/Non-concatenated CDL Link may be optionally ordered with four fiber, 1+1 protected network interface, as Single or Diverse Route.

Custom Connect may connect to Dedicated SONET Optical Transport Service (DSOTS) optical transport channels or may be provided over a DSOTS backbone network as set forth in 20.1 following. DSOTS combines DWDM and SONET technologies to create a high-speed backbone network.

Custom Connect Single Route and Diverse Route at OC12c and OC48c may also connect to an advanced data service at designated Telephone Company wire centers.

Custom Connect may also be connected to the following Telephone Company provided services, where such connections are technically and operationally feasible, as determined by the Telephone Company:

- dedicated SONET ring service
- point-to-point SONET service
- optical hubbing service
- DWDM ring service
- SONET entrance facility service
- ethernet private line service

The following footnote is not applicable to the DS1, E1, DS3, or STS1 Rider rate elements or the DS1, E1, or DS3/STS1 Shared Transport rate elements of Custom Connect. Effective March 30, 2007, orders for new Custom Connect are no longer permitted. The Telephone Company will continue to provide Custom Connect pursuant to this Section 20(1)(k) on any existing Custom Connect that is in-service as of March 30, 2007, or any order for Custom Connect that is placed with the Telephone Company prior to March 29, 2007 (collectively, Existing Custom Connect), subject to the following condition:

For any Existing Custom Connect that is currently subscribed to a term plan (i.e., commitment periods of 1-, 3- 5- and 7-years), the Telephone Company will continue to provide the Existing Custom Connect for an additional six (6) months beyond the expiration date of the customer's current commitment period or until the customer replaces the Existing Custom Connect with a comparable Telephone Company provided service, or discontinues service, whichever comes first. Subject to availability of facilities and equipment, certain additions and/or changes to the Existing Custom Connect are permitted provided that such changes do not require a new commitment period.

© 2022 Frontier Communications Parent, Inc. All rights reserved

20. Ethernet Private Line (Cont'd)

Application of Rates and Charges (Cont'd)

(1) CONNECT (Cont'd)

(j) Custom Connect# (Cont'd)

Custom Connect may also be provided over a Telephone Company provided DWDM ring backbone network, provided that such configurations are technically and operationally feasible, as determined by the Telephone Company.

CO Node

The CO Node rate element is applicable for each central office that is equipped with a fiber optic terminal in which the customer requests the ability to add/drop traffic to a CDL. Traffic is dropped from the CO Node via ports (lower speed drops). The CO Node may be ordered when a customer requires OC level multiplexing on the Custom Connect. If the customer wants to drop traffic below a DS3 at the CO Node, the customer must request a minimum DS1 interface and appropriate special access lines from Section 5. The CO Node may also be used when the customer wants to add/drop DS1 or DS3 traffic to a CDL located between the service areas shown under Section 5.2.7(H). The OC192 CO Node's ability to drop traffic below an OCn level is limited to new and in-service terminals technically capable of providing such directly from the ADM. See Rider section, herein, for further details. The appropriate multiplexing and access lines and transport rates from Section 5 will apply in addition to the CO Node and appropriate rider charges. However, multiplexing rates from Section 5 will not apply when the following conditions are met:

(1) The Customer requests to drop a DS3 from a CO Node for the purpose of establishing a DS3 multiplexed facility in its serving wire center; and
(2) the Customer subscribes to and is billed for the CO Node rate element; and
(3) the Customer CO Node is located in the same central office building where the DS3 multiplexed facility is to be located.

When the Customer CO Node is not located within the wire center serving the CDL, rates including the 3/1 multiplex rates apply as set forth in Section 5 and other Sections of this Guide. These charges are in addition to the appropriate CO Node, rates associated with transport of the DS3 facility to the wire center where the CO Node is located and rider charges applicable under this Section 20.

The CO Node, or in the alternative a CDL Link and multiplexer, is also required when Custom Connect provides the optical transmission facilities that connect an advanced data service to a CDL or to an EIS arrangement located in a different wire center.

The CO Node may be ordered at an OC3, OC12, OC48 or OC192 bandwidth capacity. The CO Node may be ordered under a one (1) year, three (3) year, five (5) year or seven (7) year Term Payment Plan (TPP).

Service availability limited. Refer to # footnote on Page 20-9.

© 2022 Frontier Communications Parent, Inc. All rights reserved

20. Ethernet Private Line

Application of Rates and Charges (Cont'd)

(1) CONNECT (Cont'd)

(j) Custom Connect# (Cont'd)

CDL Link

The CDL Link rate element is applicable for each customer designated location in which the customer requests the ability to add/drop traffic. The CDL Link is offered as Single Route, Diverse Route or Ring Route and may be ordered with premise multiplexer provided or with premise fiber meet provided as OC3, OC12, OC48 or OC192 bandwidth capacity. Only one CDL Link per connect may be ordered with premise fiber meet provided. The premise fiber meet will terminate on a fiber cross connect panel at the demarcation point. CDL Link with premise fiber meet is not available for jointly provided meetpoint arrangements except where The Telephone Company provides a node within its network to the customer.

If more than two Links or Nodes are ordered on the same order, the CDL Link must be ordered as a Ring Route CDL Link. A Ring Route CDL Link has a minimum of three nodes, one of which must be located in a Telephone Company wire center. A Custom Connect ordered via a ring topology will be provided with a service guarantee as shown in 2.8.1.1(A)(9). When Custom Connect is configured in a ring topology and is ordered under a meet point billing arrangement in which the Telephone Company acts as an intermediate carrier as set forth in Section 2.7.3 preceding, a CO Node is required.

The CDL Link may be ordered as Single Route or Diverse Route with concatenated or non-concatenated optical interface for OC3/OC3c, OC12/OC12c and OC48/OC48c. These CLD Links will terminate on a fiber cross connect panel at the demarcation point. The rider charges are included in the monthly rate for these CDL Links.

The CDL Link may also be ordered as 1.25 Gbps and 2.5 Gbps Single Route or Diverse Route. This CDL Link cannot ride a higher level facility and can only be ordered CDL to CDL.

The CDL Link may be ordered under a one (1) year, three (3) year, five (5) year or seven (7) year TPP.

When Custom Connect is provided over a DSOTS backbone and the transport between the nodes is provided using DSOTS optical transport channels, a SONET Premises Node applies in lieu of the CDL Link to each customer designated location of the Custom Connect ring where SONET multiplexing is required.

When Custom Connect is provided over a Telephone Company provided DWDM backbone and the transport between the nodes is provided using DWDM optical transport channels, a SONET Premises Node applies in lieu of the CDL Link to each customer designated location of the Custom Connect ring where SONET multiplexing is required.

Service availability limited. Refer to # footnote on Page 20-9.
* Grandfathered to existing service effective November 1, 2003.

© 2022 Frontier Communications Parent, Inc. All rights reserved

20. Ethernet Private Line

Application of Rates and Charges (Cont'd)

(1) CONNECT (Cont'd)

(j) Custom Connect# (Cont'd)

CDL Link with Optical Cross Connect

The CDL Link with Optical Cross Connect provides the communications path between the Telephone Company provided electronics and a customer's transmission equipment and facilities where the customer is provided EIS as defined in Section 17. This rate element includes the intra-office connection from the Telephone Company fiber optic terminal and the optical jumpers to facilitate the cross connect to the customer's transmission equipment and facilities within the Telephone Company wire center. When the CDL Link with Optical Cross Connect is provided, an Optical Facility Termination as set forth in Section 17.9.3 is not applicable. This rate element allows connectivity to Dedicated SONET Ring (DSR), a Telephone Company provided dedicated SONET ring or an advanced data service.

The CDL Link with Optical Cross Connect will be provided as single route without telephone company provided electronics at OC3, OC3c, OC12, OC12c, OC48, OC48c or OC192 bandwidth levels as ordered by the customer.

When Custom Connect is configured to another customer designated location, the appropriate CDL Link rate element is applicable from the customer-designated location to the serving wire center. In this case, the CDL Link rate element applies in addition to the CDL Link with Optical Cross Connect rate element. The CDL Link with Optical Cross Connect may be ordered under a one (1) year, three (3) year, five (5) year or seven (7) year TPP. Rates for the CDL Link with Optical Cross Connect are shown in 20(L)(33) will apply in addition to other charges specified in Section 17.

Network Channel Interfaces

The network channel interface codes define the bit rates that are available. Network Channel interfaces and codes are defined below:

Service	Ports	Codes
OC3, OC3c	2 Fiber	02SOF.D(B&F)
OC3, OC3c	4 Fiber, 1+1 Protection	04SOF.D(B&F)
STM1	2 Fiber	02SOF.D(B&F)
STM1	4 Fiber, 1+1 Protection	04SOF.D(B&F)
OC12, OC12c, STM4	2 Fiber	02SOF.D(B&F)
OC12, OC12c, STM4	4 Fiber, 1+1 Protection	04SOF.D(B&F)
OC48, OC48c	2 Fiber	02SOF.D(B&F)
OC48, OC48c	4 Fiber, 1+1 Protection	04SOF.D(B&F)

Service availability limited. Refer to # footnote on Page 20-9.

© 2022 Frontier Communications Parent, Inc. All rights reserved

20. Ethernet Private Line

Application of Rates and Charges (Cont'd)

(1) CONNECT (Cont'd)

(j) Custom Connect# (Cont'd)

Transport

Transport may be ordered as shared or dedicated. Shared Transport is applicable when the transport between nodes and/or Links is ordered at different bandwidth levels. The Dedicated Transport is applicable when transport between the Nodes and/or Links is of the same bandwidth level. Dedicated Transport is also applicable when transport between a wire center offering connection to an advanced data service and the CDL Link or CLD Link with Optical Cross Connect, as applicable.

Shared Transport may be ordered in bandwidths if DS1, DS3/STS1, OC3, OC3c, E1, OC12, OC12c, OC48 or OC48c. Dedicated Transport may be ordered in bandwidths of OC3, OC3c OC12, OC12c, OC48, OC48c and OC192, 1.25 Gbps and 2.5 Gbps. The transport is mileage sensitive and will be calculated based on the V&H coordinates of the wire centers comprising each segment of the custom connect service. DS1, E1, and DS3/STS1 Shared Transport may also be ordered in combination with Telephone Company provided point-to-point SONET service.

The Transport is provided at a flat-rated monthly recurring charge.

When point to point Custom Connect is provided over a Dedicated SONET Optical Transport Service (DSOTS) backbone network as set forth in Section 20.1 following, connection between the Custom Connect nodes is provided using a DSOTS optical transport channel in lieu of Custom Connect transport. When Custom Connect configured in a ring topology is provided over a DSOTS backbone network, connection between the SONET nodes (Custom Connect CO Nodes and/or SONET Premises Nodes) is provided using unprotected DSOTS optical transport channels as set forth in Section 20.1 in lieu of Custom Connect transport. Since protection is inherent in the Custom Connect service, protection is not required on the DSOTS optical transport channels.

When point-to-point Custom Connect is provided over a Telephone Company provided DWDM backbone network, connection between the Custom Connect nodes is provided using a DWDM optical transport channel in lieu of Custom Connect transport. When Custom Connect configured in a ring topology is provided over a Telephone Company provided DWDM backbone network, connection between the SONET nodes (Custom Connect CO Nodes and/or SONET Premises Nodes) is provided using unprotected DWDM optical transport channels in lieu of Custom Connect transport. Since protection is inherent in the Custom Connect service, protection is not required on the DWDM optical transport channels.

Service availability limited. Refer to # footnote on Page 20-9.

© 2022 Frontier Communications Parent, Inc. All rights reserved

20. Ethernet Private Line

Application of Rates and Charges (Cont'd)

(1) CONNECT (Cont'd)

(j) Custom Connect# (Cont'd)

Transport (Cont'd)

Connection of Custom Connect configured in a ring topology to a DSOTS ring is provided over an equal speed, unprotected optical transport channel (e.g., an OC3 Custom Connect node would connect to a 155.52 Mbps unprotected DSOTS channel). Each node of a Custom Connect ring must be located at the same customer designated location or central office as its corresponding DSOTS node.

Connection of Custom Connect configured in a ring topology to a Telephone Company provided DWDM ring is provided over an equal speed, unprotected optical transport channel (e.g., an OC3 Custom Connect node would connect to a 155.52 Mbps unprotected DWDM channel). Each node of a Custom Connect ring must be located at the same customer designated location or central office as its corresponding DWDM node.

Rider

The Rider is the customer's service(s) traversing a higher bandwidth level. Riders may be provided at DS1, DS3, OC3, OC3c, OC12, OC12c, OC48, OC48c, STS1, E1, STM1 or STM4 bandwidth levels as required by the customer. DS1, E1, DS3, and STS1 Riders may also be ordered in combination with Telephone Company provided point-to-point SONET service.

The Rider is provided at a flat-rated monthly recurring charge and is applicable per rider circuit ordered. A Rider is not charged with a CDL Link – Single or Diverse Route – Concatenated/Non-concatenated optical interface. The Rider charges for Express Connect or Flex Express Connect are included in their monthly rates.

Four fiber 1+1 protection consists of two cards in the add/drop multiplexer, one working card and a second, standby card to provide automatic protection from a fault in the working card. The four fiber 1+1 protection is available with all Telephone Company provided add/drop multiplexers and with compatible CPE and applies per CDL. When a Rider is ordered with four fiber 1+1 protection, the protection charge applies in addition to the charge for the Rider. Prior to December 28, 2002, the Telephone Company provided four fiber, 1+1 protection at no charge, upon request of the customer. Customers with those interface arrangements on their Riders are grandfathered as of December 28, 2002, and are not subject to the optional feature charge.

Intrastate Riders may be transported on the customer's interstate Ethernet Private Line facility.

In jointly provided meetpoint arrangements, rider charges apply in addition to other applicable charges when The Telephone Company provides any OCn mux node, whether provided at the customer premise or in the central office.

Service availability limited. Refer to # footnote on Page 20-9.

© 2022 Frontier Communications Parent, Inc. All rights reserved

20. Ethernet Private Line

Application of Rates and Charges (Cont'd)

(1) CONNECT (Cont'd)

(j) Custom Connect# (Cont'd)

Acceptable rider speeds allowed by node type are as follows:

N	OC3	OC12	OC48	OC192
DS1 Rider	X	X*	X*	X*
DS3 Rider	X	X	X	X*
STS1 Rider	X	X	X	X
OC3/OC3c Rider		X	X	X
OC12/OC12c Rider			X	X
OC48/OC48c Rider				X

* This provision is only available from nodes that are technically capable of providing DS1 and DS3 drops directly from the OCn node terminal. The maximum capacity utilization that can be delivered by a OCn node terminal selected by the customer may be limited by the number and type of riders that are provisioned on the OCn node and are limited by the maximum number of interfaces available to the OCn backplane. Where the OCn terminal is technically capable of supporting lower bandwidth OCn nodes as a sub-multiplexer, The Telephone Company may provide such at the customer premise and Central Office Node locations at the tariffed CO Node rates per sub-multiplexer node deployed.

SONET Premises Node - DSOTS

The SONET Premises Node rate element applies at each CDL at which a SONET node is needed to complete a Custom Connect ring over a DSOTS backbone network. The functionality and capabilities of the SONET Premises Node are the same as those specified for the CO Node preceding. The SONET Premises Node will only be provided when Custom Connect is configured in a ring or point to point topology in which the transport between the nodes (CO Node and/or SONET Premises Nodes) is provided using DSOTS optical transport channels. DSOTS is described in Section 20.1 following. The SONET Premises Node applies in lieu of the Custom Connect CDL Link.

The SONET Premises Node rate element also applies at each CDL at which a SONET node is needed to complete a Custom Connect ring over a Telephone Company provided DWDM backbone network. The SONET Premises Node will only be provided when Custom Connect is configured in a ring or point-to-point topology in which the transport between the nodes (CO Node and/or SONET Premises Nodes) is provided using DWDM optical transport channels. The SONET Premises Node applies in lieu of the Custom Connect CDL Link.

The SONET Premises Node may be ordered under a three (3) year, five (5) year or seven (7) year TPP.

Service availability limited. Refer to # footnote on Page 20-9.

© 2022 Frontier Communications Parent, Inc. All rights reserved

20. Ethernet Private Line (Cont'd

Application of Rates and Charges (Cont'd)

(2) Optical Network Transport

The transport element provides for the interoffice Optical Network transport between wire centers on Telephone Company defined LANs. Each IC customer Connect must have its own transport. Transport cannot be shared among IC customer Connects.

Optical Network Transport may be provided as LAN-wide, LAN-wide Premium or Point-to-Point. J-SONET Transport may be purchased in DS0, DS1 or DS3 bandwidths. Band SONET Transport may be purchased in DS0, DS1, DS3, OC3 or OC12 Bandwidths.

(a) Reserved for Future Use

(b) Reserved for Future Use

(c) Reserved for Future Use

(d) Reserved for Future Use

(e) J-SONET Transport provides transport between the serving wire centers of the CDLs. J-SONET Transport may be provided at DS0, DS1 or DS3 bandwidth levels as required by the customer. The bandwidth of the transport must be the same as the bandwidth of the CO Connect or the payload, e.g., DS0 J-SONET requires a DS0 connect and DS3 J-SONET Transport requires a DS3 CO Connect. J-SONET Transport may be ordered as switched or special access.

J-SONET Transport is provided at a non-distance sensitive flat rated monthly charge per LAN traversed.

* Grandfathered to existing service effective December 26, 1998.

© 2022 Frontier Communications Parent, Inc. All rights reserved

20. Ethernet Private Line

Application of Rates and Charges (Cont'd)

(2) Optical Network Transport (Cont'd)

(f) Banded Optical Transport# provides transport between the serving wire center of the interexchange access customer's location and the access customer's end user premises. Banded Optical Transport may be provided at DS0, DS1, DS3, OC3, STS1, OC12 or OC48 bandwidth levels as required by the customer. Wholly provided Banded Optical Transport may also be provided at OC3c, OC12c and OC48c bandwidth levels. When Banded Optical is ordered at a DSO level, the customer must request a minimum of a DS1 interface at the IC customer wire center and will be charged for the appropriate rider (i.e., DS1 or DS3). Banded Optical Transport is provided with a service guarantee as shown in 2.8.1.1(A)(9). For subscription to Banded Optical Transport, the customer must have an accumulative demand requirement, whether provided pursuant to this Section 20 or as Telephone Company provided banded SONET transport, equivalent to an average of nine DS3s, i.e., 5,978 channels, per LATA. The Telephone Company will include Banded Optical Transport ordered pursuant to this Section 20 and Telephone Company provided banded SONET transport for the customer's accumulative demand requirement. The bandwidth will be reviewed annually at a mutually agreed upon date by the customer and the Company. An allowance of minus 2% will be considered as having met the commitment level. Should the bandwidth fall below minus 2%, the customer will have thirty (30) days to meet the bandwidth requirement. If not met, the customer will be notified by the Telephone Company and will be required to convert from Banded Optical Transport to another Ethernet Private Line Transport option.

Banded Optical Transport is provided at a flat-rated monthly charge for one (1) year, three (3) year, five (5) year, or seven (7) year Term Payment Plans (TPPs). The term period for Banded Optical Transport cannot exceed the term period of the Connect. Banded Optical Transport includes the special access line from the end user serving wire center to the end user premises, for both on-net and off-net, with the exception of jointly provided Banded Optical Transport. Banded Optical Transport will be provisioned at the highest network facility available at the time of the order. The monthly rate will be determined based on the mileage between the serving wire centers of the customer designated locations and is applicable on a per circuit basis. Mileage will be rounded up to the next whole mile except when the CDLs are collocated.

When both customer designated locations are provided by the Telephone Company, wholly provided, the monthly rates as shown in 20(L)(66) are applicable. When one of the customer designated locations is provided by another telephone company, or the customer terminates at a multiplexer in a wire center on the IOF, jointly provided, the monthly rates as shown in 20(L)(67) shall apply. For jointly provided transport with another telephone company, the meet point billing mileage calculation is specified in Section 2.7.3.

Banded Optical Transport may be ordered as switched or special access.

Effective September 14, 2007, orders for new OCn Banded Optical Transport are no longer permitted. The Telephone Company will continue to provide OCn Banded Optical Transport pursuant to this Section 20 on any existing OCn Banded Optical Transport that is in-service as of September 14, 2007, or any order for OCn Banded Optical Transport that is placed with the Telephone Company prior to September 14, 2007 (collectively, Existing OCn Banded Optical Transport), subject to the following condition:

For any Existing OCn Banded Optical Transport that is currently subscribed to a term plan (i.e., commitment periods of 1-, 3-, 5- , and 7-years), the Telephone Company will continue to provide the Existing OCn Banded Optical Transport for an additional six (6) months beyond the expiration date of the customer's current commitment period, or until the customer replaces the Existing OCn Banded Optical Transport with a comparable Telephone Company provided service, or until the customer discontinues service, whichever occurs first. Orders to moves, add, or change Existing OCn Banded Optical Transport are not permitted.

© 2022 Frontier Communications Parent, Inc. All rights reserved

20. Ethernet Private Line (Cont'd

Application of Rates and Charges (Cont'd)

(2) Optical Network Transport (Cont'd)

© 2022 Frontier Communications Parent, Inc. All rights reserved

20. Ethernet Private Line (Cont'd

Application of Rates and Charges (Cont'd)

(3) Payload

Payload is the customer service riding on the shared IOF transport and/or the activation of the service(s). Payload is provided at a flat-rated monthly recurring charge which includes add/drop multiplexing and is applicable at the wire center for each customer designated location, with the exception of CO Connects, Banded Optical Transport and Wholly Provided Custom Connect. Payload services include DS1, DS3, OC3, OC3c, OC12, OC12c, STS1 and STM1. Payload services may be ordered as switched or special access.

The monthly rates for DS1 payloads are shown in 20(L).

* Grandfathered to existing service effective December 26, 1998.

© 2022 Frontier Communications Parent, Inc. All rights reserved

20. Ethernet Private Line (Cont'd

(E) Reserved for Future Use

(F) Reserved for Future Use

(G) Rate Regulations

Ethernet Private Line may be ordered under a one (1), three (3), five (5), or seven (7) year Term Payment Plan (TPP). Any TPP for these services is subject to an TPP Termination Liability Charge as specified herein.

When ordered together the TPP applies to Connects, Banded Optical Transport and Additional Nodes.

(1) Changes in Length of a TPP

Prior to the expiration of a TPP period, the customer may elect to convert to a new TPP period of the same or different length, subject to the following conditions:

- No credit will be given for the new period for payments made under the original TPP arrangement.
- NRCs will not be reapplied for existing services.
- If the new TPP period is shorter in length than the time remaining under the existing TPP, the change to the new TPP period constitutes a disconnect of the existing TPP service and termination liability charges will apply.
- The rates for the new period will be the rates currently in effect at the time of the change.
- If the customer subscribes to a new TPP which is greater in length than the initial TPP term and discontinues one or all of the service elements prior to the expiration of the new termination liability period, the termination liability, as set forth below, will apply based on the remainder of the TPP period in effect at the time of the disconnect.

Year in which Service Is Discontinued	Liability Rate
1	100%
2	75%
3	50%
4 or more	25%

* Grandfathered to existing service effective December 26, 1998.

© 2022 Frontier Communications Parent, Inc. All rights reserved

20. Ethernet Private Line (Cont'd

(G) Rate Regulations (Cont'd)

(2) Renewal Options

Ninety (90) days prior to the expiration of the existing TPP, the customer shall submit in writing to select a new TPP or disconnect service. If no notice is received, the Company will automatically reconnect the customer to a new TPP with the same term life as the previous.

After completion of the initial TPP term and the customer subscribes to a new term that is longer in length the termination liability, as set forth below, will apply based on the remainder of the TPP period in effect at the time of the disconnect.

Year in which Service Is Discontinued	Liability Rate
1	20%
2	15%
3	10%
4 or more	5%

(3) Conversion

When an existing customer purchases Ethernet Private Line, the customer may upgrade their existing special access services to Ethernet Private Line. The upgrade may require physical network changes, as well as changes to existing billing arrangements. Physical changes consist of reterminating existing services not currently utilizing the Optical network.

Termination liability charges will not apply to the customer's existing services provided the Ethernet Private Line TPP term commitment agreement is equal to or longer in length than the time remaining for the existing arrangement.

(4) Rate Changes

The TPP rates are exempt from Telephone Company initiated increases for the length of the plan, however, decreases will be passed on to the customer. Rate changes may occur as a result of FCC action.

(5) Termination Liability

In the event the customer discontinues one or all of the service elements (Connect, Banded Optical Transport, Additional Node) prior to the end of the termination liability period, initial termination liability charges, as set forth below, will apply based on the remainder of the TPP period in effect at the time of the disconnect.

Year in which Service Is Discontinued	Liability Rate
1	40%
2	35%
3	30%
4 or more	25%

© 2022 Frontier Communications Parent, Inc. All rights reserved

20. Ethernet Private Line (Cont'd

(G) Rate Regulations (Cont'd)

(6) Termination Without Liability

For Banded Optical Transport, termination charges will not apply when the customer disconnects a DS0 or DS1 on a circuit by circuit basis provided the required accumulative bandwidth is met as shown in 20(2)(f).

© 2022 Frontier Communications Parent, Inc. All rights reserved

20. Ethernet Private Line (Cont'd

(G) Rate Regulations (Cont'd)

(7) Upgrade to Higher Bandwidth

The Customer who has grown incrementally, may elect to upgrade service to a higher bandwidth during a TPP period to gain economic efficiencies. Termination charges will not apply as long as the upgraded service remains connected at the same point of termination(s), unless the network is being redesigned to gain network efficiency. Nonrecurring charges associated with the new bandwidth upgrade shall apply.

(8) Change in Interface

The Customer may elect to change service from a 2-fiber interface to a 4-fiber interface during a TPP. Termination charges will not apply as long as the changed service remains at the same point of termination(s).

(H) Off-Net Wire Center

Off-Net wire center is a wire center not a designated Ethernet Private Line wire center office. The customer may order a DS0, DS1, DS3 or E1 to the Off-Net wire center. Mileage charges will be determined based on airline miles to the nearest on-net wire center at the transport rates shown in Section 5.

Circuits connected to the Off-Net wire center will be billed existing tariffed rates as shown in Section 5.

Shared Use

Shared Use is the provisioning of Switched Access over Ethernet Private Line. Rating as Ethernet Private Line will continue until such time as a portion of the available Ethernet Private Line capacity is used to provide Switched Access service.

For shared use, a special access DS3 interface must be ordered between the IC customer and the IC customer wire center. When switched trunks are ordered, a DS1 switched interface must be ordered for the switched trunks. A DS3 or DS1 interface ordered as Switched Access will be used exclusively for Switched Access.

As individual channels are activated for Switched Access, monthly charges will be adjusted between Switched Access and Ethernet Private Line Access based on the number of channels used for Switched Access and the remaining Ethernet Private Line Access facility.

The total Shared Use for Switched Access charge is equal to the number of channels used for Switched Access divided by 24 for DS1 or 672 for DS3 times the Monthly Switched Access Charges. The monthly Switched Access rates used will be the current rates for Switched Access Entrance Facility, Direct-Trunked Transport Facility, Direct-Trunked Transport Termination and Multiplexer.

© 2022 Frontier Communications Parent, Inc. All rights reserved

20. Ethernet Private Line (Cont'd

Following is an example of how Shared Use will apply to Ethernet Private Line.

Single Route OC3 Connect - Electrical	$4,100.00
Point-to-Point Transport - OC1 (10 Miles X $160.00)	1,600.00
DS3 CO Connect	130.00
DS3 Payload	160.00
Total SONET Monthly Recurring Charge	$5,5-448

Customer wants to utilize 850 channels for Switched Access DS3 with 10 miles of transport.

850/672 = 1.2 DS3s

DS3 Direct-Trunked Transport Facility = $67.44 X 10	$ 674.40
DS3 Direct-Trunked Transport Termination	190.46
DS3 Entrance Facility	1,263.67
Total Monthly Rate per DS3	$2,128.53

$2,128.53 X 1.2 DS3s = $2,554.23 Switched Access Shared Use Monthly Rate

© 2022 Frontier Communications Parent, Inc. All rights reserved

20. Ethernet Private Line (Cont'd

Shared Use (Cont'd)

SONET Monthly Recurring Charge	$5,990.00
Switched Access Shared Use	-2,554.23
SONET Monthly Charge	$3,435.77

SONET Monthly Charge	$3,435.77
Switched Access Shared Use	+2,554.23
Total Monthly Billing	$5,990.00

© 2022 Frontier Communications Parent, Inc. All rights reserved

20. Ethernet Private Line (Cont'd

(J) Reserved for Future Use

© 2022 Frontier Communications Parent, Inc. All rights reserved

20. Ethernet Private Line (Cont'd

(K) Ethernet Private Line LANs * (Cont'd)

State	CLLI	Wire Center	LAN Name	Contiguous LAN
IL	BLTNILXD	BLOOMINGTON MAIN	Bloomington	
IL	BLTNILXT	BLOOMINGTON EAST	Bloomington	
IL	BLTNILXN	BLOOMINGTON NORMAL	Bloomington	
IL	CRDLILXE	CARBONDALE	Carbondale	
IL	LRVLILXE	LAWRENCEVILLE	Lawrenceville	
IL	OLNYILXE	OLNEY	Lawrenceville	
IN	EKHTINXA	ELKHART MAIN	Elkhart	
IN	EKHTINXB	ELKHART NORTH	Elkhart	
IN	GSHNINXA	GOSHEN	Elkhart	
IN	FTWYINXA	FORT WAYNE MAIN	Fort Wayne	
IN	FTWYINXF	FORT WAYNE NORTH	Fort Wayne	
IN	FTWYINXG	FORT WAYNE NORTHEAST	Fort Wayne	
IN	FTWYINXB	FORT WAYNE NORTHWEST	Fort Wayne	
IN	FTWYINXC	FORT WAYNE SOUTH	Fort Wayne	
IN	FTWYINXD	FORT WAYNE SOUTHEAST	Fort Wayne	
IN	FTWYINXE	WAYNESDALE	Fort Wayne	
IN	FTWYINXL	FORT WAYNE WEST	Fort Wayne	
IN	LFYTINXC	LAFAYETTE EAST	Lafayette	
IN	LFYTINXA	LAFAYETTE MAIN	Lafayette	
IN	LFYTINXF	LAFAYETTE SOUTH	Lafayette	
IN	LFYTINXB	LAFAYETTE WEST	Lafayette	
IN	NWHNINXA	NEW HAVEN	Fort Wayne	

(*) Reference 20(C) for availability of service.

© 2022 Frontier Communications Parent, Inc. All rights reserved

20. Ethernet Private Line (Cont'd

(K) Ethernet Private Line LANs * (Cont'd)

State	CLLI	Wire Center	LAN Name	Contiguous LAN
IL	BLTNILXD	BLOOMINGTON MAIN	Bloomington	
IL	BLTNILXT	BLOOMINGTON EAST	Bloomington	
IL	BLTNILXN	BLOOMINGTON NORMAL	Bloomington	
IL	CRDLILXE	CARBONDALE	Carbondale	
IL	LRVLILXE	LAWRENCEVILLE	Lawrenceville	
IL	OLNYILXE	OLNEY	Lawrenceville	
IN	EKHTINXA	ELKHART MAIN	Elkhart	
IN	EKHTINXB	ELKHART NORTH	Elkhart	
IN	GSHNINXA	GOSHEN	Elkhart	
IN	FTWYINXA	FORT WAYNE MAIN	Fort Wayne	
IN	FTWYINXF	FORT WAYNE NORTH	Fort Wayne	
IN	FTWYINXG	FORT WAYNE NORTHEAST	Fort Wayne	
IN	FTWYINXB	FORT WAYNE NORTHWEST	Fort Wayne	
IN	FTWYINXC	FORT WAYNE SOUTH	Fort Wayne	
IN	FTWYINXD	FORT WAYNE SOUTHEAST	Fort Wayne	
IN	FTWYINXE	WAYNESDALE	Fort Wayne	
IN	FTWYINXL	FORT WAYNE WEST	Fort Wayne	
IN	LFYTINXC	LAFAYETTE EAST	Lafayette	
IN	LFYTINXA	LAFAYETTE MAIN	Lafayette	
IN	LFYTINXF	LAFAYETTE SOUTH	Lafayette	
IN	LFYTINXB	LAFAYETTE WEST	Lafayette	
IN	NWHNINXA	NEW HAVEN	Fort Wayne	

(*) Reference 20(C) for availability of service.

© 2022 Frontier Communications Parent, Inc. All rights reserved

20. Ethernet Private Line

(K) Ethernet Private Line LANs * (Cont'd)

State	CLLI	Wire Center	LAN Name	Contiguous LAN
MI	MLFRMIXE	MILFORD	Milford	
MI	WHLKMIXG	WHITE LAKE	Milford	
MI	MSKGMIXK	MUSKEGON	Muskegon	
MI	MSKGMIXN	MUSKEGON EAST	Muskegon	
MI	MSKHMIXP	MUSKEGON HEIGHTS	Muskegon	
NC	DRH	WATTS	Durham	
NC	DRH	LAKEWOOD	Durham	
NC	TDRH	ANGIER	Durham	
NC	DRH	PARKWOOD	Durham	
NC	DRH	NELSON	Durham	
NC	DRH	DURHAM MAIN	Durham	
NC	DRH	TRIANGLE	Durham	
NC	DRH	BENNETT	Durham	
NC	DRH	HOLT	Durham	
NC	DRH	BRAGTOWN	Durham	
NC	CRD	BUTNER	Durham	
NC	CRD	CREEDMOOR	Durham	
OH	MARNOHXC	MARION	Marion	
OH	DLWROHXA	DELAWARD	Marion	
OH	WOTNOH88	WORTHINGTON	Marion	
OH	MEDNOHXB	MEDINA	Medina	
OH	WSWOOHXA	WADSWORTH	Medina	
OH	MTRSOHXA	MONTROSE	Medina	
OH	ASLDOHXB	ASHLAND	Ashland	
OH	NRWLOHXA	NORWALK	Ashland	
OH	NWPHOHXA	NEW PHILADELPHIA	New Philadelphia	
OH	MNRVOHXA	MINERVA	New Philadelphia	
OH	CNTNOH45	CANTON	New Philadelphia	
OH	CMBROHXB	CAMBRIDGE	Cambridge	
OH	CLWLOHXA	CALDWELL	Cambridge	
OH	BVRLOHXA	BEVERLY	Cambridge	
OH	MRTTOH37	MARIETTA	Cambridge	
OH	ZNVLOH45	ZANESVILLE	Cambridge	
OR	ALOHORXX	ALOHA	Somerset	
OR	BVTNORXB	BEAVERTON	Somerset	
OR	FRGVORXX	FOREST GROVE	Somerset	
OR	GRHMORXB	GRESHAM	Somerset	
OR	HLBOORXB	HILLSBORO	Somerset	
OR	SMRWORXA	SOMERSET WEST	Somerset	
OR	TGRDORXC	BULL MOUNTAIN	Somerset	
OR	TGRDORXA	TIGARD	River Grove	Somerset
OR	TULTORXA	TUALATIN	River Grove	
OR	WIVLORXA	WILSONVILLE	River Grove	

(*) Reference 20(C) for availability of service.

© 2022 Frontier Communications Parent, Inc. All rights reserved

20. Ethernet Private Line (Cont'd

(K) Ethernet Private Line LANs *(Cont'd)

State	CLLI	Wire Center	LAN Name	Contiguous LAN
WA	JUNTWAXA	JUANITA	Redmond	
WA	KRLDWAXX	KIRKLAND	Redmond	
WA	RDMDWAXA	REDMOND	Redmond	
WA	SMSHWAXA	SAMMAMISH	Redmond	
WA	MONRWAXX	MONROE	Redmond	
WA	DVLLWAXX	DUVALL EAST	Redmond	
WA	BOTHWAXB	BOTHELL	Everett	Redmond
WA	EVRTWAXA	EVERETT	Everett	
WA	EVRTWAXC	EVERETT CASINO	Everett	
WA	EVRTWAXF	EVERETT MAIN	Everett	
WA	LKSTWAXA	LAKE STEVENS	Everett	
WA	MRWYWAXA	MANOR WAY	Everett	
WA	MYVIWAXX	MARYSVILLE	Everett	
WA	SLLKWAXA	SILVER LAKE	Everett	
WA	SNHSWAXX	SNOHOMISH	Everett	
WA	RCBHWAXX	RICHMOND BEACH	Everett	
WA	ARTNWAXX	ARLINGTON	Everett	
WA	HLLKWAXX	HALLS LAKE	Everett	
WA	KNWCWAXA	KENNEWICK-HIGHLANDS	Tri-Cities	
WA	KNWCWAXB	KENNEWICK-MAIN	Tri-Cities	
WA	KNWCWAXC	KENNEWICK-MEADOWS	Tri-Cities	
WA	RCLDWAXA	NORTH RICHLAND	Tri-Cities	
WA	RCLDWAXB	RICHLAND	Tri-Cities	
WA	WNTCWAXX	WENATCHEE	Wenatchee	
WA	PLMNWAKK	PULLMAN	Pullman	
WA	BRWSWAXA	BREWSTER	Brewster	
WA	BRPTWAXX	BRIDGEPORT	Brewster	
WA	ANCRWAXX	ANACORTES	Anacortes	
WA	OKHRWAXX	OAK HARBOR	Anacortes	

(*) Reference 20(C) for availability of service.

© 2022 Frontier Communications Parent, Inc. All rights reserved

20. Ethernet Private Line (Cont'd

(L) Rates and Charges**

(1) Reserved

© 2022 Frontier Communications Parent, Inc. All rights reserved

20. Ethernet Private Line (Cont'd

(L) Rates and Charges (Cont'd)

(2) Reserved for Future Use

© 2022 Frontier Communications Parent, Inc. All rights reserved

20. Ethernet Private Line (Cont'd

(L) Rates and Charges (Cont'd)

(3) Reserved for Future Use

© 2022 Frontier Communications Parent, Inc. All rights reserved

20. Ethernet Private Line (Cont'd

(L) Rates and Charges (Cont'd)

(4) Reserved for Future Use

© 2022 Frontier Communications Parent, Inc. All rights reserved

20. Ethernet Private Line (Cont'd

(L) Rates and Charges (Cont'd)

(5) Reserved for Future Use

© 2022 Frontier Communications Parent, Inc. All rights reserved

20. Ethernet Private Line (Cont'd

(L) Rates and Charges (Cont'd)

(6) Reserved for Future Use

© 2022 Frontier Communications Parent, Inc. All rights reserved

20. Ethernet Private Line (Cont'd

(L) Rates and Charges** (Cont'd)

(7) Connect - Single Route - OC12 - Electrical

	Nonrecurring Charge	Two Year Monthly Rate
Jurisdiction		

(D)

* Grandfathered to existing service effective December 26, 1998.
**These rates and charges apply to both Price Bands and N-MSA rates and charges.

© 2022 Frontier Communications Parent, Inc. All rights reserved

20. Ethernet Private Line (Cont'd

(L) Rates and Charges (Cont'd)

(8) Reserved for Future Use

© 2022 Frontier Communications Parent, Inc. All rights reserved

20. Ethernet Private Line (Cont'd

(L) Rates and Charges (Cont'd)

(9) Reserved for Future Use

© 2022 Frontier Communications Parent, Inc. All rights reserved

20. Ethernet Private Line (Cont'd

(L) Rates and Charges (Cont'd)

(10) Reserved for Future Use

© 2022 Frontier Communications Parent, Inc. All rights reserved

20. Ethernet Private Line (Cont'd

(L) Rates and Charges (Cont'd)

(11) Reserved for Future Use

© 2022 Frontier Communications Parent, Inc. All rights reserved

20. Ethernet Private Line (Cont'd

(L) Rates and Charges (Cont'd)

(12) Reserved for Future Use

© 2022 Frontier Communications Parent, Inc. All rights reserved

20. Ethernet Private Line (Cont'd

(L) Rates and Charges** (Cont'd)

(13) Reserved

© 2022 Frontier Communications Parent, Inc. All rights reserved

20. Ethernet Private Line (Cont'd

(L) Rates and Charges (Cont'd)

(14) Reserved for Future Use

© 2022 Frontier Communications Parent, Inc. All rights reserved

20. Ethernet Private Line (Cont'd

(L) Rates and Charges (Cont'd)

(15) Reserved for Future Use

© 2022 Frontier Communications Parent, Inc. All rights reserved

20. Ethernet Private Line (Cont'd

(L) Rates and Charges (Cont'd)

(16) Reserved for Future Use

© 2022 Frontier Communications Parent, Inc. All rights reserved

20. Ethernet Private Line (Cont'd

(L) Rates and Charges (Cont'd)

(17) Reserved

© 2022 Frontier Communications Parent, Inc. All rights reserved

20. Ethernet Private Line (Cont'd

(L) Rates and Charges (Cont'd)

(18) Reserved for Future Use

© 2022 Frontier Communications Parent, Inc. All rights reserved

20. Ethernet Private Line (Cont'd

(L) Rates and Charges (Cont'd)

(19) Reserved for Future Use

© 2022 Frontier Communications Parent, Inc. All rights reserved

20. Ethernet Private Line (Cont'd

(L) Rates and Charges (Cont'd)

(20) Reserved for Future Use

© 2022 Frontier Communications Parent, Inc. All rights reserved

20. Ethernet Private Line (Cont'd

(L) Rates and Charges (Cont'd)

(21) Reserved for Future Use

© 2022 Frontier Communications Parent, Inc. All rights reserved

20. Ethernet Private Line (Cont'd

(L) Rates and Charges (Cont'd)

(22) Reserved for Future Use

© 2022 Frontier Communications Parent, Inc. All rights reserved

20. Ethernet Private Line (Cont'd

(L) Rates and Charges (Cont'd)

(23) Reserved for Future Use

© 2022 Frontier Communications Parent, Inc. All rights reserved

20. Ethernet Private Line (Cont'd

(L) Rates and Charges (Cont'd)

(24) Reserved for Future Use

© 2022 Frontier Communications Parent, Inc. All rights reserved

20. Ethernet Private Line (Cont'd

(L) Rates and Charges (Cont'd)

(25) Reserved for Future Use

© 2022 Frontier Communications Parent, Inc. All rights reserved

20. Ethernet Private Line (Cont'd

(L) Rates and Charges (Cont'd)

(26) Reserved for Future Use

© 2022 Frontier Communications Parent, Inc. All rights reserved

20. Ethernet Private Line (Cont'd

(L) Rates and Charges (Cont'd)

(27) Reserved for Future Use

© 2022 Frontier Communications Parent, Inc. All rights reserved

20. Ethernet Private Line (Cont'd

(L) Rates and Charges (Cont'd)

(28) Reserved for Future Use

© 2022 Frontier Communications Parent, Inc. All rights reserved

20. Ethernet Private Line (Cont'd)

(L) Rates and Charges* (Cont'd)

(29) Express Connect # - First System - OC3

Jurisdiction	One Year Monthly Rate	Three Year Monthly Rate	Five Year Monthly Rate	Seven Year Monthly Rate	
Illinois	7,700.00	6,800.00	6,300.00	6,200.00	(D)
Indiana	7,700.00	6,800.00	6,300.00	6,200.00	
North Carolina	7,700.00	6,800.00	6,300.00	6,200.00	
South Carolina	7,800.00	7,350.00	6,950.00	6,850.00	(D)
Wisconsin	7,800.00	7,350.00	6,950.00	6,850.00	(D)

Express Connect # - Additional System - OC3

Jurisdiction	One Year Monthly Rate	Three Year Monthly Rate	Five Year Monthly Rate	Seven Year Monthly Rate	
Illinois	1,100.00	1,100.00	1,100.00	1,100.00	(D)
Indiana	1,100.00	1,100.00	1,100.00	1,100.00	
North Carolina	1,100.00	1,100.00	1,100.00	1,100.00	
South Carolina	1,100.00	1,100.00	1,100.00	1,100.00	(D)
Wisconsin	1,100.00	1,100.00	1,100.00	1,100.00	(D)

*These rates and charges apply to both Price Bands and N-MSA rates and charges.
Service availability limited. Refer to # footnote on Page 20-6.

© 2022 Frontier Communications Parent, Inc. All rights reserved.

20. Ethernet Private Line (Cont'd

(L) Rates and Charges* (Cont'd)

(30) Express Connect # - First System - OC12

Jurisdiction	One Year Monthly Rate	Three Year Monthly Rate	Five Year Monthly Rate	Seven Year Monthly Rate	
Illinois	13,000.00	12,100.00	11,400.00	11,300.00	(D)
Indiana	13,000.00	11,300.00	10,700.00	10,600.00	
North Carolina	13,000.00	12,100.00	11,400.00	11,300.00	(D)
South Carolina	13,500.00	12,100.00	11,400.00	11,000.00	(D)
Wisconsin	13,500.00	12,100.00	11,400.00	11,000.00	

Express Connect # - Additional System - OC12

Jurisdiction	One Year Monthly Rate	Three Year Monthly Rate	Five Year Monthly Rate	Seven Year Monthly Rate	
Illinois	2,200.00	2,200.00	2,200.00	2,100.00	(D)
Indiana	2,200.00	2,100.00	1,900.00	1,900.00	
North Carolina	2,200.00	2,100.00	2,100.00	2,100.00	(D)
South Carolina	2,300.00	2,200.00	2,200.00	2,100.00	(D)
Wisconsin	2,300.00	2,200.00	2,200.00	2,100.00	

*These rates and charges apply to both Price Bands and N-MSA rates and charges.
Service availability limited. Refer to # footnote on Page 20-6.

© 2022 Frontier Communications Parent, Inc. All rights reserved.

20. Ethernet Private Line

(L) Rates and Charges* (Cont'd)

(30) Express Connect # - First System – OC48

Jurisdiction	One Year Monthly Rate	Three Year Monthly Rate	Five Year Monthly Rate	Seven Year Monthly Rate	
Illinois	27,625.00	27,125.00	26,750.00	26,350.00	(D)
Indiana	27,625.00	27,125.00	26,750.00	26,350.00	
North Carolina	27,625.00	27,125.00	26,750.00	26,350.00	
South Carolina	27,625.00	27,125.00	26,750.00	26,350.00	(D)
Wisconsin	27,625.00	27,125.00	26,750.00	26,350.00	(D)

Express Connect # - Additional System – OC48

Jurisdiction	One Year Monthly Rate	Three Year Monthly Rate	Five Year Monthly Rate	Seven Year Monthly Rate	
Illinois	9,135.00	9,000.00	9,000.00	9,000.00	(D)
Indiana	9,135.00	9,000.00	9,000.00	9,000.00	
North Carolina	9,135.00	9,000.00	9,000.00	9,000.00	
South Carolina	9,135.00	9,000.00	9,000.00	9,000.00	(D)
Wisconsin	9,135.00	9,000.00	9,000.00	9,000.00	(D)

*These rates and charges apply to both Price Bands and N-MSA rates and charges.
Service availability limited. Refer to # footnote on Page 20-6.

© 2022 Frontier Communications Parent, Inc. All rights reserved.

20. Ethernet Private Line (Cont'd

(L) Rates and Charges* (Cont'd)

(31) Flex Express Connect # - First System - OC3

Jurisdiction	One Year Monthly Rate	Three Year Monthly Rate	Five Year Monthly Rate	Seven Year Monthly Rate	
Illinois	11,500.00	10,200.00	9,550.00	9,450.00	(D)
Indiana	11,500.00	10,200.00	9,550.00	9,450.00	
North Carolina	11,500.00	10,200.00	9,550.00	9,450.00	
South Carolina	12,050.00	10,600.00	10,000.00	9,900.00	(D)
Wisconsin	12,050.00	10,600.00	10,000.00	9,900.00	(D)

Flex Express Connect # - Additional System - OC3

Jurisdiction	One Year Monthly Rate	Three Year Monthly Rate	Five Year Monthly Rate	Seven Year Monthly Rate	
Illinois	1,200.00	1,200.00	1,200.00	1,200.00	(D)
Indiana	1,200.00	1,200.00	1,200.00	1,200.00	
North Carolina	1,200.00	1,200.00	1,200.00	1,200.00	
South Carolina	1,200.00	1,200.00	1,200.00	1,200.00	(D)
Wisconsin	1,200.00	1,200.00	1,200.00	1,200.00	(D)

*These rates and charges apply to both Price Bands and N-MSA rates and charges.
Service availability limited. Refer to # footnote on Page 20-7.

© 2022 Frontier Communications Parent, Inc. All rights reserved.

20. Ethernet Private Line (Cont'd

(L) Rates and Charges* (Cont'd)

(31) Express and Flex Express # - Additional CDL Node - OC3

Jurisdiction	Monthly Rate	One Year Monthly Rate	Three Year Monthly Rate	Five Year Monthly Rate	Seven Year Monthly Rate	
Illinois	3,600.00	3,300.00	3,300.00	3,300.00	3,300.00	(D)
Indiana	3,600.00	3,300.00	3,300.00	3,300.00	3,300.00	
North Carolina	3,600.00	3,300.00	3,300.00	3,300.00	3,300.00	(D)
South Carolina	3,600.00	3,300.00	3,300.00	3,300.00	3,300.00	(D)
Wisconsin	3,600.00	3,300.00	3,300.00	3,300.00	3,300.00	

Express and Flex Express # - Additional CO Node - OC3

Jurisdiction	Monthly Rate	One Year Monthly Rate	Three Year Monthly Rate	Five Year Monthly Rate	Seven Year Monthly Rate	
Illinois	2,500.00	2,200.00	2,200.00	2,200.00	2,200.00	(D)
Indiana	2,500.00	2,200.00	2,200.00	2,200.00	2,200.00	
North Carolina	2,500.00	2,200.00	2,200.00	2,200.00	2,200.00	(D)
South Carolina	2,500.00	2,200.00	2,200.00	2,200.00	2,200.00	(D)
Wisconsin	2,500.00	2,200.00	2,200.00	2,200.00	2,200.00	

*These rates and charges apply to both Price Bands and N-MSA rates and charges.
Service availability limited. Refer to # footnotes on Pages 20-6 and 20-7.

© 2022 Frontier Communications Parent, Inc. All rights reserved.

20. Ethernet Private Line (Cont'd

(L) Rates and Charges* (Cont'd)

(31) Flex Express # - First System Transport - OC3

Jurisdiction	Per Mile Monthly Rate	
Illinois	170.00	(D)
Indiana	170.00	
North Carolina	170.00	
South Carolina	170.00	(D)
Wisconsin	170.00	(D)

Flex Express # - Additional System Transport - OC3

Jurisdiction	Per Mile Monthly Rate	
Illinois	25.00	(D)
Indiana	25.00	
North Carolina	25.00	
South Carolina	25.00	(D)
Wisconsin	25.00	(D)

*These rates and charges apply to both Price Bands and N-MSA rates and charges.
Service availability limited. Refer to # footnote on Page 20-7.

© 2022 Frontier Communications Parent, Inc. All rights reserved.

20. Ethernet Private Line (Cont'd

(L) Rates and Charges* (Cont'd)

(32) Flex Express Connect # - First System - OC12

Jurisdiction	One Year Monthly Rate	Three Year Monthly Rate	Five Year Monthly Rate	Seven Year Monthly Rate	
Illinois	18,800.00	17,600.00	16,700.00	16,600.00	(D)
Indiana	18,800.00	17,600.00	16,200.00	16,100.00	
North Carolina	18,800.00	17,600.00	16,700.00	16,600.00	(D)
South Carolina	19,700.00	17,600.00	16,700.00	16,600.00	(D)
Wisconsin	19,700.00	17,600.00	16,700.00	16,600.00	

Flex Express Connect # - Additional System - OC12

Jurisdiction	One Year Monthly Rate	Three Year Monthly Rate	Five Year Monthly Rate	Seven Year Monthly Rate	
Illinois	2,300.00	2,300.00	2,300.00	2,300.00	(D)
Indiana	2,300.00	2,300.00	2,100.00	2,100.00	
North Carolina	2,300.00	2,300.00	2,300.00	2,300.00	(D)
South Carolina	2,300.00	2,300.00	2,300.00	2,300.00	(D)
Wisconsin	2,300.00	2,300.00	2,300.00	2,300.00	

*These rates and charges apply to both Price Bands and N-MSA rates and charges.
Service availability limited. Refer to # footnote on Page 20-7.

© 2022 Frontier Communications Parent, Inc. All rights reserved.

20. Ethernet Private Line (Cont'd

(L) Rates and Charges* (Cont'd)

(32) Express and Flex Express # - Additional CDL Node - OC12

Jurisdiction	Monthly Rate	One Year Monthly Rate	Three Year Monthly Rate	Five Year Monthly Rate	Seven Year Monthly Rate	
Illinois	6,000.00	5,900.00	5,800.00	5,450.00	5,450.00	(D)
Indiana	5,700.00	5,600.00	5,500.00	5,250.00	5,250.00	
North Carolina	6,000.00	5,900.00	5,800.00	5,450.00	5,450.00	(D)
South Carolina	6,000.00	5,900.00	5,800.00	5,450.00	5,450.00	(D)
Wisconsin	6,000.00	5,900.00	5,800.00	5,450.00	5,450.00	

Express and Flex Express # - Additional CO Node - OC12

Jurisdiction	Monthly Rate	One Year Monthly Rate	Three Year Monthly Rate	Five Year Monthly Rate	Seven Year Monthly Rate	
Illinois	3,500.00	3,425.00	3,350.00	3,100.00	3,100.00	(D)
Indiana	3,500.00	3,425.00	3,350.00	3,100.00	3,100.00	
North Carolina	3,500.00	3,425.00	3,350.00	3,100.00	3,100.00	(D)
South Carolina	3,500.00	3,425.00	3,350.00	3,100.00	3,100.00	(D)
Wisconsin	3,500.00	3,425.00	3,350.00	3,100.00	3,100.00	

*These rates and charges apply to both Price Bands and N-MSA rates and charges.
Service availability limited. Refer to # footnotes on Pages 20-6 and 20-7.

© 2022 Frontier Communications Parent, Inc. All rights reserved.

20. Ethernet Private Line (Cont'd

(L) Rates and Charges* (Cont'd)

(32) Flex Express # - First System Transport - OC12

Jurisdiction	Per Mile Monthly Rate	
Illinois	240.00	(D)
Indiana	240.00	
North Carolina	240.00	
South Carolina	240.00	(D)
Wisconsin	240.00	(D)

Flex Express # - Additional System Transport - OC12

Jurisdiction	Per Mile Monthly Rate	
Illinois	45.00	(D)
Indiana	45.00	
North Carolina	45.00	
South Carolina	50.00	(D)
Wisconsin	50.00	(D)

*These rates and charges apply to both Price Bands and N-MSA rates and charges.
Service availability limited. Refer to # footnote on Page 20-7.

© 2022 Frontier Communications Parent, Inc. All rights reserved.

20. Ethernet Private Line

(L) Rates and Charges* (Cont'd)

(32) Flex Express Connect # - First System – OC48

Jurisdiction	One Year Monthly Rate	Three Year Monthly Rate	Five Year Monthly Rate	Seven Year Monthly Rate	
Illinois	33,425.00	33,100.00	32,700.00	32,300.00	(D)
Indiana	33,425.00	33,100.00	32,700.00	32,300.00	
North Carolina	33,425.00	33,100.00	32,700.00	32,300.00	(D)
South Carolina	33,425.00	33,100.00	32,700.00	32,300.00	(D)
Wisconsin	33,425.00	33,100.00	32,700.00	32,300.00	

Flex Express Connect # - Additional System – OC48

Jurisdiction	One Year Monthly Rate	Three Year Monthly Rate	Five Year Monthly Rate	Seven Year Monthly Rate	
Illinois	11,316.00	11,316.00	11,316.00	11,316.00	(D)
Indiana	11,316.00	11,316.00	11,316.00	11,316.00	
North Carolina	11,316.00	11,316.00	11,316.00	11,316.00	
South Carolina	11,316.00	11,316.00	11,316.00	11,316.00	(D)
Wisconsin	11,316.00	11,316.00	11,316.00	11,316.00	(D)

*These rates and charges apply to both Price Bands and N-MSA rates and charges.
Service availability limited. Refer to # footnote on Page 20-7.

© 2022 Frontier Communications Parent, Inc. All rights reserved.

20. Ethernet Private Line

(L) Rates and Charges* (Cont'd)

(32) Express and Flex Express # - Additional CDL Node – OC48

Jurisdiction	Monthly Rate	One Year Monthly Rate	Three Year Monthly Rate	Five Year Monthly Rate	Seven Year Monthly Rate	
Illinois	12,945.00	11,945.00	11,945.00	11,945.00	11,945.00	(D)
Indiana	12,945.00	11,945.00	11,945.00	11,945.00	11,945.00	
North Carolina	12,945.00	11,945.00	11,945.00	11,945.00	11,945.00	(D)
South Carolina	12,945.00	11,945.00	11,945.00	11,945.00	11,945.00	(D)
Wisconsin	12,945.00	11,945.00	11,945.00	11,945.00	11,945.00	

Express and Flex Express # - Additional CO Node – OC48

Jurisdiction	Monthly Rate	One Year Monthly Rate	Three Year Monthly Rate	Five Year Monthly Rate	Seven Year Monthly Rate	
Illinois	9,130.00	9,130.00	9,130.00	9,130.00	9,130.00	
Indiana	9,130.00	9,130.00	9,130.00	9,130.00	9,130.00	(D)
North Carolina	9,130.00	9,130.00	9,130.00	9,130.00	9,130.00	
South Carolina	9,130.00	9,130.00	9,130.00	9,130.00	9,130.00	(D)
Wisconsin	9,130.00	9,130.00	9,130.00	9,130.00	9,130.00	(D)

*These rates and charges apply to both Price Bands and N-MSA rates and charges.
Service availability limited. Refer to # footnotes on Pages 20-6 and 20-7.

© 2022 Frontier Communications Parent, Inc. All rights reserved.

20. Ethernet Private Line

(L) Rates and Charges* (Cont'd)

(32) Flex Express # - First System Transport – OC48

Jurisdiction	Per Mile Monthly Rate	
Illinois	500.00	(D)
Indiana	500.00	
North Carolina	500.00	(D)
South Carolina	500.00	(D)
Wisconsin	500.00	

Flex Express # - Additional System Transport – OC48

Jurisdiction	Per Mile Monthly Rate	
Illinois	100.00	(D)
Indiana	100.00	
North Carolina	100.00	(D)
South Carolina	100.00	(D)
Wisconsin	100.00	

*These rates and charges apply to both Price Bands and N-MSA rates and charges.
Service availability limited. Refer to # footnote on Page 20-7.

© 2022 Frontier Communications Parent, Inc. All rights reserved.

20. Ethernet Private Line (Cont'd

(L) Rates and Charges* (Cont'd)

(33) Custom Connect CO Node - OC3#

Jurisdiction	Nonrecurring Charge	One Year Monthly Rate	Three Year Monthly Rate	Five Year Monthly Rate	Seven Year Monthly Rate	
Illinois	1,500.00	1,000.00	900.00	850.00	800.00	(D)
Indiana	1,500.00	1,000.00	900.00	850.00	800.00	
Michigan	1,500.00	1,000.00	900.00	850.00	825.00	
North Carolina	1,500.00	1,000.00	900.00	850.00	800.00	
Ohio	1,500.00	1,000.00	900.00	850.00	825.00	(D)
South Carolina	1,500.00	1,000.00	900.00	850.00	800.00	(D)
Wisconsin	1,500.00	1,000.00	900.00	850.00	800.00	

Custom Connect CO Node - OC12#

Jurisdiction	Nonrecurring Charge	One Year Monthly Rate	Three Year Monthly Rate	Five Year Monthly Rate	Seven Year Monthly Rate	
Illinois	3,000.00	2,250.00	2,150.00	2,050.00	1,975.00	(D)
Indiana	3,000.00	2,250.00	2,150.00	2,050.00	1,975.00	
Michigan	3,000.00	2,300.00	2,200.00	2,100.00	2,000.00	
North Carolina	3,000.00	2,250.00	2,150.00	2,050.00	1,975.00	
Ohio	3,000.00	2,300.00	2,200.00	2,100.00	2,000.00	(D)
South Carolina	3,000.00	2,300.00	2,200.00	2,100.00	2,000.00	(D)
Wisconsin	3,000.00	2,300.00	2,200.00	2,100.00	2,000.00	

*These rates and charges apply to both Price Band and N-MSA rates and charges.
Service availability limited. Refer to # footnote on Page 20-9.

© 2022 Frontier Communications Parent, Inc. All rights reserved.

20. Ethernet Private Line (Cont'd

(L) Rates and Charges* (Cont'd)

(33) Custom Connect CO Node - OC48#

(Jurisdiction	Nonrecurring Charge	One Year Monthly Rate	Three Year Monthly Rate	Five Year Monthly Rate	Seven Year Monthly Rate	
						(D)
Illinois	3,000.00	4,500.00	4,300.00	4,100.00	3,900.00	
Indiana	3,000.00	4,500.00	4,300.00	4,100.00	3,900.00	
Michigan	3,000.00	4,500.00	4,300.00	4,100.00	3,900.00	
North Carolina	3,000.00	4,500.00	4,300.00	4,100.00	3,900.00	
Ohio	3,000.00	4,500.00	4,300.00	4,100.00	3,900.00	
						(D)
South Carolina	3,000.00	4,500.00	4,300.00	4,100.00	3,900.00	
						(D)
Wisconsin	3,000.00	4,500.00	4,300.00	4,100.00	3,900.00	

Service availability limited. Refer to # footnote on Page 20-9.

*These rates and charges apply to both Price Bands and N-MSA rates and charges.

© 2022 Frontier Communications Parent, Inc. All rights reserved.

20. Ethernet Private Line

(L) Rates and Charges* (Cont'd)

(33) Custom Connect CO Node – OC192#

Jurisdiction:_____, (C)
Illinois, Indiana, Michigan, North Carolina, Ohio,
_____, South Carolina, (C)
_____, and Wisconsin (C)

	Nonrecurring Charge	One Year Monthly Rate	Three Year Monthly Rate	Five Year Monthly Rate	Seven Year Monthly Rate
OC192	$6000.00	$11,250.00	$10,750.00	$10,250.00	$9,750.00

Service availability limited. Refer to # footnote on Page 20-9.

*These rates and charges apply to both Price Bands and N-MSA rates and charges.

© 2022 Frontier Communications Parent, Inc. All rights reserved.

20. Ethernet Private Line

(L) Rates and Charges* (Cont'd)

(33) SONET Premises Node – DSOTS OC3#

Jurisdiction	Nonrecurring Charge	Three Year Monthly Rate	Five Year Monthly Rate	Seven Year Monthly Rate	
Illinois	1.00	900.00	850.00	800.00	(D)
Indiana	1.00	900.00	850.00	800.00	
Michigan	1.00	900.00	850.00	825.00	
North Carolina	1.00	900.00	850.00	800.00	
Ohio	1.00	900.00	850.00	825.00	(D)
South Carolina	1.00	900.00	850.00	800.00	(D)
Wisconsin	1.00	900.00	850.00	800.00	

Service availability limited. Refer to # footnote on Page 20-9.

*These rates and charges apply to both Price Bands and N-MSA rates and charges.

© 2022 Frontier Communications Parent, Inc. All rights reserved.

20. Ethernet Private Line

(L) Rates and Charges* (Cont'd)

(33) SONET Premises Node - DSOTS OC12#

Jurisdiction	Nonrecurring Charge	Three Year Monthly Rate	Five Year Monthly Rate	Seven Year Monthly Rate	
Illinois	1.00	2,150.00	2,050.00	1,975.00	(D)
Indiana	1.00	2,150.00	2,050.00	1,975.00	
Michigan	1.00	2,200.00	2,100.00	2,000.00	
North Carolina	1.00	2,150.00	2,050.00	1,975.00	
Ohio	1.00	2,200.00	2,100.00	2,000.00	(D)
South Carolina	1.00	2,200.00	2,100.00	2,000.00	(D)
Wisconsin	1.00	2,200.00	2,100.00	2,000.00	

Service availability limited. Refer to # footnote on Page 20-9.

*These rates and charges apply to both Price Bands and N-MSA rates and charges.

© 2022 Frontier Communications Parent, Inc. All rights reserved.

20. Ethernet Private Line

(L) Rates and Charges* (Cont'd)

(33) SONET Premises Node - DSOTS OC48#

Jurisdiction	Nonrecurring Charge	Three Year Monthly Rate	Five Year Monthly Rate	Seven Year Monthly Rate	
Illinois	1.00	4,300.00	4,100.00	3,900.00	(D)
Indiana	1.00	4,300.00	4,100.00	3,900.00	
Michigan	1.00	4,300.00	4,100.00	3,900.00	
North Carolina	1.00	4,300.00	4,100.00	3,900.00	
Ohio	1.00	4,300.00	4,100.00	3,900.00	(D)
South Carolina	1.00	4,300.00	4,100.00	3,900.00	(D)
Wisconsin	1.00	4,300.00	4,100.00	3,900.00	

Service availability limited. Refer to # footnote on Page 20-9.

*These rates and charges apply to both Price Bands and N-MSA rates and charges.

© 2022 Frontier Communications Parent, Inc. All rights reserved.

20. Ethernet Private Line (Cont'd

(L) Rates and Charges* (Cont'd)

(33) Custom Connect CDL Link - Single Route with Premise Multiplexer Provided - OC3#

Jurisdiction	Nonrecurring Charge	One Year Monthly Rate	Three Year Monthly Rate	Five Year Monthly Rate	Seven Year Monthly Rate	
Illinois	$3,000.00	$1,075.00	$1,000.00	$950.00	$900.00	
Indiana	3,000.00	1,075.00	1,000.00	950.00	900.00	
Michigan	3,000.00	1,190.00	1,100.00	1,050.00	1,000.00	
North Carolina	3,000.00	1,075.00	1,000.00	950.00	900.00	
Ohio	3,000.00	1,190.00	1,100.00	1,050.00	1,000.00	(D)
South Carolina	3,000.00	1,190.00	1,100.00	1,050.00	1,000.00	(D)
Wisconsin	3,000.00	1,190.00	1,100.00	1,050.00	1,000.00	

Custom Connect CDL Link - Single Route with Premise Fiber Meet Provided - OC3#

Jurisdiction	Nonrecurring Charge	One Year Monthly Rate	Three Year Monthly Rate	Five Year Monthly Rate	Seven Year Monthly Rate	
Illinois	1,500.00	650.00	620.00	600.00	580.00	(D)
Indiana	1,500.00	650.00	620.00	600.00	580.00	
Michigan	1,500.00	700.00	650.00	620.00	600.00	
North Carolina	1,500.00	650.00	620.00	600.00	580.00	
Ohio	1,500.00	700.00	650.00	620.00	600.00	(D)
South Carolina	1,500.00	700.00	650.00	620.00	600.00	(D)
Wisconsin	1,500.00	700.00	650.00	620.00	600.00	

*These rates and charges apply to both Price Bands and N-MSA rates and charges.
Service availability limited. Refer to # footnote on Page 20-9.

© 2022 Frontier Communications Parent, Inc. All rights reserved.

20. Ethernet Private Line (Cont'd

(L) Rates and Charges* (Cont'd)

(33) Custom Connect CDL Link - Single Route Concatenated/Non-concatenated - OC3c/OC3#

Jurisdiction	Nonrecurring Charge	One Year Monthly Rate	Three Year Monthly Rate	Five Year Monthly Rate	Seven Year Monthly Rate	
						(D)
Illinois	6,000.00	3,300.00	3,150.00	2,950.00	2,800.00	
Indiana	6,000.00	3,300.00	3,150.00	2,950.00	2,800.00	
Michigan	6,000.00	3,500.00	3,200.00	3,050.00	2,900.00	
North Carolina	6,000.00	3,300.00	3,150.00	2,950.00	2,800.00	
Ohio	6,000.00	3,500.00	3,200.00	3,050.00	2,900.00	
						(D)
South Carolina	6,000.00	3,500.00	3,200.00	3,050.00	2,900.00	
						(D)
Wisconsin	6,000.00	3,500.00	3,200.00	3,050.00	2,900.00	

Service availability limited. Refer to # footnote on Page 20-9.

*These rates and charges apply to both Price Bands and N-MSA rates and charges.

© 2022 Frontier Communications Parent, Inc. All rights reserved.

20. Ethernet Private Line (Cont'd

(L) Rates and Charges* (Cont'd)

(33) Custom Connect CDL Link - Single Route with Premise Multiplexer Provided - OC12#

Jurisdiction	Nonrecurring Charge	One Year Monthly Rate	Three Year Monthly Rate	Five Year Monthly Rate	Seven Year Monthly Rate	
Illinois	6,000.00	2,550.00	2,400.00	2,200.00	2,050.00	(D)
Indiana	6,000.00	2,550.00	2,400.00	2,200.00	2,050.00	
Michigan	6,000.00	2,750.00	2,450.00	2,300.00	2,150.00	
North Carolina	6,000.00	2,550.00	2,400.00	2,200.00	2,050.00	
Ohio	6,000.00	2,750.00	2,450.00	2,300.00	2,150.00	(D)
South Carolina	6,000.00	2,750.00	2,450.00	2,300.00	2,150.00	(D)
Wisconsin	6,000.00	2,750.00	2,450.00	2,300.00	2,150.00	

Custom Connect CDL Link - Single Route with Premise Fiber Meet Provided - OC12#

Jurisdiction	Nonrecurring Charge	One Year Monthly Rate	Three Year Monthly Rate	Five Year Monthly Rate	Seven Year Monthly Rate	
Illinois	1,500.00	650.00	620.00	600.00	580.00	(D)
Indiana	1,500.00	650.00	620.00	600.00	580.00	
Michigan	1,500.00	700.00	650.00	620.00	600.00	
North Carolina	1,500.00	650.00	620.00	600.00	580.00	
Ohio	1,500.00	700.00	650.00	620.00	600.00	(D)
South Carolina	1,500.00	700.00	650.00	600.00	600.00	(D)
Wisconsin	1,500.00	700.00	650.00	600.00	600.00	

*These rates and charges apply to both Price Bands and N-MSA rates and charges.
Service availability limited. Refer to # footnote on Page 20-9.

© 2022 Frontier Communications Parent, Inc. All rights reserved.

20. Ethernet Private Line (Cont'd

(L) Rates and Charges* (Cont'd)

(33) Custom Connect CDL Link - Single Route – Concatenated/Non-concatenated - OC12c/OC12#

Jurisdiction	Nonrecurring Charge	One Year Monthly Rate	Three Year Monthly Rate	Five Year Monthly Rate	Seven Year Monthly Rate	
						(D)
Illinois	6,000.00	6,700.00	6,350.00	6,150.00	5,950.00	
Indiana	6,000.00	6,700.00	6,350.00	6,150.00	5,950.00	
Michigan	6,000.00	6,900.00	6,480.00	6,270.00	6,050.00	
North Carolina	6,000.00	6,700.00	6,350.00	6,150.00	5,950.00	
Ohio	6,000.00	6,900.00	6,480.00	6,270.00	6,050.00	
						(D)
South Carolina	6,000.00	6,900.00	6,480.00	6,270.00	6,050.00	
						(D)
Wisconsin	6,000.00	6,900.00	6,480.00	6,270.00	6,050.00	

Service availability limited. Refer to # footnote on Page 20-9.

*These rates and charges apply to both Price Bands and N-MSA rates and charges.

© 2022 Frontier Communications Parent, Inc. All rights reserved.

20. Ethernet Private Line (Cont'd

(L) Rates and Charges* (Cont'd)

(33) Custom Connect CDL Link - Single Route with Premise Multiplexer Provided - OC48#

Jurisdiction	Nonrecurring Charge	One Year Monthly Rate	Three Year Monthly Rate	Five Year Monthly Rate	Seven Year Monthly Rate	
I						(D)
Illinois	6,000.00	4,450.00	4,100.00	3,900.00	3,700.00	
Indiana	6,000.00	4,450.00	4,100.00	3,900.00	3,700.00	
Michigan	6,000.00	4,650.00	4,230.00	4,020.00	3,800.00	
North Carolina	6,000.00	4,450.00	4,100.00	3,900.00	3,700.00	
Ohio	6,000.00	4,650.00	4,230.00	4,020.00	3,800.00	(D)
South Carolina	6,000.00	4,650.00	4,230.00	4,020.00	3,800.00	(D)
Wisconsin	6,000.00	4,650.00	4,230.00	4,020.00	3,800.00	

Custom Connect CDL Link - Single Route with Premise Fiber Meet Provided - OC48#

Jurisdiction	Nonrecurring Charge	One Year Monthly Rate	Three Year Monthly Rate	Five Year Monthly Rate	Seven Year Monthly Rate	
						(D)
Illinois	1,500.00	650.00	620.00	600.00	580.00	
Indiana	1,500.00	650.00	620.00	600.00	580.00	
Michigan	1,500.00	700.00	650.00	620.00	600.00	
North Carolina	1,500.00	650.00	620.00	600.00	580.00	
Ohio	1,500.00	700.00	650.00	620.00	600.00	(D)
South Carolina	1,500.00	700.00	650.00	620.00	600.00	(D)
Wisconsin	1,500.00	700.00	650.00	620.00	600.00	

* These rates and charges apply to both Price Bands and N-MSA rates and charges.
# Service availability limited. Refer to # footnote on Page 20-9.

© 2022 Frontier Communications Parent, Inc. All rights reserved.

20. Ethernet Private Line

(L) Rates and Charges* (Cont'd)

(33) Custom Connect CDL Link - Single Route – Concatenated/Non-concatenated – OC48c/OC48#

Jurisdiction: _____ , Illinois, (C)
Indiana, Michigan, North Carolina, Ohio,____, (C)
South Carolina, _____ , (C)
and Wisconsin

	Nonrecurring Charge	One Year Monthly Rate	Three Year Monthly Rate	Five Year Monthly Rate	Seven Year Monthly Rate
OC48C/OC48	$6,000.00	$12,500.00	$12,250.00	$12,000.00	$11,750.00

Service availability limited. Refer to # footnote on Page 20-9.

*These rates and charges apply to both Price Bands and N-MSA rates and charges.

© 2022 Frontier Communications Parent, Inc. All rights reserved.

20. Ethernet Private Line

(L) Rates and Charges* (Cont'd)

(33) Custom Connect CDL Link - Single Route with Premise Multiplexer Provided – OC192#

Jurisdiction: _____, Illinois, (C)
Indiana, Michigan, North Carolina, Ohio,
_____, South Carolina, (C)
_____ and Wisconsin (C)

	Nonrecurring Charge	One Year Monthly Rate	Three Year Monthly Rate	Five Year Monthly Rate	Seven Year Monthly Rate
OC192	$12,000.00	$11,625.00	$11,200.00	$11,000.00	$10,900.00

Custom Connect CDL Link - Single Route with Premise Fiber Meet Provided – OC192#

	Nonrecurring Charge	One Year Monthly Rate	Three Year Monthly Rate	Five Year Monthly Rate	Seven Year Monthly Rate
OC192	$1,500.00	$700.00	$650.00	$620.00	$600.00

Service availability limited. Refer to # footnote on Page 20-9.

*These rates and charges apply to both Price Bands and N-MSA rates and charges.

© 2022 Frontier Communications Parent, Inc. All rights reserved.

20. Ethernet Private Line (Cont'd

(L) Rates and Charges* (Cont'd)

(33) Custom Connect CDL Link - Diverse Route with Premise Multiplexer Provided - OC3#

Jurisdiction	Nonrecurring Charge	One Year Monthly Rate	Three Year Monthly Rate	Five Year Monthly Rate	Seven Year Monthly Rate	
Illinois	3,000.00	1,790.00	1,700.00	1,650.00	1,600.00	(D)
Indiana	3,000.00	1,790.00	1,700.00	1,650.00	1,600.00	
Michigan	3,000.00	1,790.00	1,700.00	1,650.00	1,600.00	
North Carolina	3,000.00	1,790.00	1,700.00	1,650.00	1,600.00	
Ohio	3,000.00	1,790.00	1,700.00	1,650.00	1,600.00	(D)
South Carolina	3,000.00	1,790.00	1,700.00	1,650.00	1,600.00	(D)
Wisconsin	3,000.00	1,790.00	1,700.00	1,650.00	1,600.00	

Custom Connect CDL Link - Diverse Route with Premise Fiber Meet Provided - OC3#

Jurisdiction	Nonrecurring Charge	One Year Monthly Rate	Three Year Monthly Rate	Five Year Monthly Rate	Seven Year Monthly Rate	
Illinois	3,000.00	1,200.00	1,165.00	1,125.00	1,100.00	(D)
Indiana	3,000.00	1,200.00	1,165.00	1,125.00	1,100.00	
Michigan	3,000.00	1,300.00	1,250.00	1,220.00	1,200.00	
North Carolina	3,000.00	1,200.00	1,165.00	1,125.00	1,100.00	
Ohio	3,000.00	1,300.00	1,250.00	1,220.00	1,200.00	(D)
South Carolina	3,000.00	1,300.00	1,250.00	1,220.00	1,200.00	(D)
Wisconsin	3,000.00	1,300.00	1,250.00	1,220.00	1,200.00	

*These rates and charges apply to both Price Bands and N-MSA rates and charges.

Service availability limited. Refer to # footnote on Page 20-9.

© 2022 Frontier Communications Parent, Inc. All rights reserved.

20. Ethernet Private Line (Cont'd

(L) Rates and Charges* (Cont'd)

(33) Custom Connect CDL Link - Diverse Route - Concatenated/Non-concatenated - OC3c/OC3#

Jurisdiction	Nonrecurring Charge	One Year Monthly Rate	Three Year Monthly Rate	Five Year Monthly Rate	Seven Year Monthly Rate	
						(D)
Illinois	6,000.00	3,925.00	3,650.00	3,525.00	3,400.00	
Indiana	6,000.00	3,925.00	3,650.00	3,525.00	3,400.00	
Michigan	6,000.00	4,100.00	3,800.00	3,650.00	3,500.00	
North Carolina	6,000.00	3,925.00	3,650.00	3,525.00	3,400.00	
Ohio	6,000.00	4,100.00	3,800.00	3,650.00	3,500.00	
						(D)
South Carolina	6,000.00	4,100.00	3,800.00	3,650.00	3,500.00	
						(D)
Wisconsin	6,000.00	4,100.00	3,800.00	3,650.00	3,500.00	

*These rates and charges apply to both Price Bands and N-MSA rates and charges.

Service availability limited. Refer to # footnote on Page 20-9.

© 2022 Frontier Communications Parent, Inc. All rights reserved.

20. Ethernet Private Line (Cont'd

(L) Rates and Charges* (Cont'd)

(33) Custom Connect CDL Link - Diverse Route with Premise Multiplexer Provided - OC12#

Jurisdiction	Nonrecurring Charge	One Year Monthly Rate	Three Year Monthly Rate	Five Year Monthly Rate	Seven Year Monthly Rate	
Illinois	6,000.00	3,175.00	2,900.00	2,775.00	2,650.00	(D)
Indiana	6,000.00	3,175.00	2,900.00	2,775.00	2,650.00	
Michigan	6,000.00	3,350.00	3,050.00	2,900.00	2,750.00	
North Carolina	6,000.00	3,175.00	2,900.00	2,775.00	2,650.00	
Ohio	6,000.00	3,350.00	3,050.00	2,900.00	2,750.00	(D)
South Carolina	6,000.00	3,350.00	3,050.00	2,900.00	2,750.00	(D)
Wisconsin	6,000.00	3,350.00	3,050.00	2,900.00	2,750.00	

Custom Connect CDL Link - Diverse Route with Premise Fiber Meet Provided - OC12#

Jurisdiction	Nonrecurring Charge	One Year Monthly Rate	Three Year Monthly Rate	Five Year Monthly Rate	Seven Year Monthly Rate	
Illinois	3,000.00	1,200.00	1,165.00	1,125.00	1,100.00	(D)
Indiana	3,000.00	1,200.00	1,165.00	1,125.00	1,100.00	
Michigan	3,000.00	1,300.00	1,250.00	1,220.00	1,200.00	
North Carolina	3,000.00	1,200.00	1,165.00	1,125.00	1,100.00	
Ohio	3,000.00	1,300.00	1,250.00	1,220.00	1,200.00	(D)
South Carolina	3,000.00	1,300.00	1,250.00	1,220.00	1,200.00	(D)
Wisconsin	3,000.00	1,300.00	1,250.00	1,220.00	1,200.00	

*These rates and charges apply to both Price Bands and N-MSA rates and charges.
Service availability limited. Refer to # footnote on Page 20-9.

© 2022 Frontier Communications Parent, Inc. All rights reserved.

20. Ethernet Private Line (Cont'd

(L) Rates and Charges* (Cont'd)

(33) Custom Connect CDL Link - Diverse Route - Concatenated/Non-concatenated - OC12c/OC12#

Jurisdiction	Nonrecurring Charge	One Year Monthly Rate	Three Year Monthly Rate	Five Year Monthly Rate	Seven Year Monthly Rate	
						(D)
Illinois	6,000.00	7,350.00	7,050.00	6,825.00	6,625.00	
Indiana	6,000.00	7,350.00	7,050.00	6,825.00	6,625.00	
Michigan	6,000.00	7,500.00	7,080.00	6,870.00	6,650.00	
North Carolina	6,000.00	7,350.00	7,050.00	6,825.00	6,625.00	
Ohio	6,000.00	7,500.00	7,080.00	6,870.00	6,650.00	
						(D)
South Carolina	6,000.00	7,500.00	7,080.00	6,870.00	6,650.00	
						(D)
Wisconsin	6,000.00	7,500.00	7,080.00	6,870.00	6,650.00	

Service availability limited. Refer to # footnote on Page 20-9.

*These rates and charges apply to both Price Bands and N-MSA rates and charges.

© 2022 Frontier Communications Parent, Inc. All rights reserved.

20. Ethernet Private Line (Cont'd

(L) Rates and Charges* (Cont'd)

(33) Custom Connect CDL Link - Diverse Route with Premise Multiplexer Provided – OC48#

Jurisdiction	Nonrecurring Charge	One Year Monthly Rate	Three Year Monthly Rate	Five Year Monthly Rate	Seven Year Monthly Rate	
						(D)
Illinois	6,000.00	5,100.00	4,800.00	4,575.00	4,375.00	
Indiana	6,000.00	5,100.00	4,800.00	4,575.00	4,375.00	
Michigan	6,000.00	5,250.00	4,830.00	4,620.00	4,400.00	
North Carolina	6,000.00	5,100.00	4,800.00	4,575.00	4,375.00	
Ohio	6,000.00	5,250.00	4,830.00	4,620.00	4,400.00	
						(D)
South Carolina	6,000.00	5,250.00	4,830.00	4,620.00	4,400.00	
						(D)
Wisconsin	6,000.00	5,250.00	4,830.00	4,620.00	4,400.00	

Custom Connect CDL Link - Diverse Route with Premise Fiber Meet Provided - OC48#

Jurisdiction	Nonrecurring Charge	One Year Monthly Rate	Three Year Monthly Rate	Five Year Monthly Rate	Seven Year Monthly Rate	
						(D)
Illinois	3,000.00	1,200.00	1,165.00	1,125.00	1,100.00	
Indiana	3,000.00	1,200.00	1,165.00	1,125.00	1,100.00	
Michigan	3,000.00	1,300.00	1,250.00	1,220.00	1,200.00	
North Carolina	3,000.00	1,200.00	1,165.00	1,125.00	1,100.00	
Ohio	3,000.00	1,300.00	1,250.00	1,220.00	1,200.00	
						(D)
South Carolina	3,000.00	1,300.00	1,250.00	1,220.00	1,200.00	
						(D)
Wisconsin	3,000.00	1,300.00	1,250.00	1,220.00	1,200.00	

*These rates and charges apply to both Price Bands and N-MSA rates and charges.
Service availability limited. Refer to # footnote on Page 20-9.

© 2022 Frontier Communications Parent, Inc. All rights reserved.

20. Ethernet Private Line

(L) Rates and Charges* (Cont'd)

(33) Custom Connect CDL Link - Diverse Route - Concatenated/Non-concatenated – OC48c/OC48#

Jurisdiction: _____, Illinois, (C)
Indiana, Michigan, North Carolina, Ohio, _____, (C)
, South Carolina, , (C)
and Wisconsin

	Nonrecurring Charge	One Year Monthly Rate	Three Year Monthly Rate	Five Year Monthly Rate	Seven Year Monthly Rate
OC48c/OC48	$6,000.00	$13,200.00	$13,000.00	$12,500.00	$12,250.00

Service availability limited. Refer to # footnote on Page 20-9.

* These rates and charges apply to both Price Bands and N-MSA rates and charges.

© 2022 Frontier Communications Parent, Inc. All rights reserved.

20. Ethernet Private Line

(L) Rates and Charges* (Cont'd)

(33) Custom Connect CDL Link - Diverse Route with Premise Multiplexer Provided – OC192#

Jurisdiction: _____, Illinois, (C)
Indiana, Michigan, North Carolina, Ohio, _____, (C)
, South Carolina, _____ , (C)
and Wisconsin

	Nonrecurring Charge	One Year Monthly Rate	Three Year Monthly Rate	Five Year Monthly Rate	Seven Year Monthly Rate
OC192	$12,000.00	$13,125.00	$12,400.00	$11,550.00	$11,000.00

Custom Connect CDL Link - Diverse Route with Premise Fiber Meet Provided – OC192#

	Nonrecurring Charge	One Year Monthly Rate	Three Year Monthly Rate	Five Year Monthly Rate	Seven Year Monthly Rate
OC192	$3,000.00	$1,300.00	$1,250.00	$1,220.00	$1,200.00

Service availability limited. Refer to # footnote on Page 20-9.

* These rates and charges apply to both Price Bands and N-MSA rates and charges.

© 2022 Frontier Communications Parent, Inc. All rights reserved.

20. Ethernet Private Line (Cont'd

(L) Rates and Charges* (Cont'd)

(33) Custom Connect CDL Link - Ring Route with Premise Multiplexer Provided - OC3#

Jurisdiction	Nonrecurring Charge	One Year Monthly Rate	Three Year Monthly Rate	Five Year Monthly Rate	Seven Year Monthly Rate	
						(D)
Illinois	3,000.00	2,520.00	2,450.00	2,400.00	2,350.00	
Indiana	3,000.00	2,520.00	2,450.00	2,400.00	2,350.00	
Michigan	3,000.00	2,790.00	2,700.00	2,650.00	2,600.00	
North Carolina	3,000.00	2,520.00	2,450.00	2,400.00	2,350.00	
Ohio	3,000.00	2,790.00	2,700.00	2,650.00	2,600.00	
						(D)
South Carolina	3,000.00	2,790.00	2,700.00	2,650.00	2,600.00	
						(D)
Wisconsin	3,000.00	2,790.00	2,700.00	2,650.00	2,600.00	

Custom Connect CDL Link - Ring Route with Premise Fiber Meet Provided - OC3#

Jurisdiction	Nonrecurring Charge	One Year Monthly Rate	Three Year Monthly Rate	Five Year Monthly Rate	Seven Year Monthly Rate	
						(D)
Illinois	3,000.00	2,045.00	2,020.00	1,995.00	1,970.00	
Indiana	3,000.00	2,045.00	2,020.00	1,995.00	1,970.00	
Michigan	3,000.00	2,300.00	2,250.00	2,220.00	2,200.00	
North Carolina	3,000.00	2,045.00	2,020.00	1,995.00	1,970.00	
Ohio	3,000.00	2,300.00	2,250.00	2,220.00	2,200.00	
						(D)
South Carolina	3,000.00	2,300.00	2,250.00	2,220.00	2,200.00	
						(D)
Wisconsin	3,000.00	2,300.00	2,250.00	2,220.00	2,200.00	

*These rates and charges apply to both Price Bands and N-MSA rates and charges.
Service availability limited. Refer to # footnote on Page 20-9.

© 2022 Frontier Communications Parent, Inc. All rights reserved.

20. Ethernet Private Line (Cont'd

(L) Rates and Charges* (Cont'd)

(33) Custom Connect CDL Link - Ring Route with Premise Multiplexer Provided - OC12#

Jurisdiction	Nonrecurring Charge	One Year Monthly Rate	Three Year Monthly Rate	Five Year Monthly Rate	Seven Year Monthly Rate	
						(D)
Illinois	6,000.00	3,950.00	3,800.00	3,650.00	3,475.00	
Indiana	6,000.00	3,950.00	3,800.00	3,650.00	3,475.00	
Michigan	6,000.00	4,350.00	4,050.00	3,900.00	3,750.00	
North Carolina	6,000.00	3,950.00	3,800.00	3,650.00	3,475.00	
Ohio	6,000.00	4,350.00	4,050.00	3,900.00	3,750.00	(D)
South Carolina	6,000.00	4,350.00	4,050.00	3,900.00	3,780.00	
						(D)
Wisconsin	6,000.00	4,350.00	4,050.00	3,900.00	3,780.00	

Custom Connect CDL Link - Ring Route with Premise Fiber Meet Provided - OC12#

Jurisdiction	Nonrecurring Charge	One Year Monthly Rate	Three Year Monthly Rate	Five Year Monthly Rate	Seven Year Monthly Rate	
						(D)
Illinois	3,000.00	2,045.00	2,020.00	1,995.00	1,970.00	
Indiana	3,000.00	2,045.00	2,020.00	1,995.00	1,970.00	
Michigan	3,000.00	2,300.00	2,250.00	2,220.00	2,200.00	
North Carolina	3,000.00	2,045.00	2,020.00	1,995.00	1,970.00	
Ohio	3,000.00	2,300.00	2,250.00	2,220.00	2,200.00	
						(D)
South Carolina	3,000.00	2,300.00	2,250.00	2,220.00	2,200.00	
						(D)
Wisconsin	3,000.00	2,300.00	2,250.00	2,220.00	2,200.00	

*These rates and charges apply to both Price Bands and N-MSA rates and charges.
Service availability limited. Refer to # footnote on Page 20-9.

© 2022 Frontier Communications Parent, Inc. All rights reserved.

20. Ethernet Private Line (Cont'd

(L) Rates and Charges* (Cont'd)

(33) Custom Connect CDL Link - Ring Route with Premise Multiplexer Provided - OC48#

Jurisdiction	Nonrecurring Charge	One Year Monthly Rate	Three Year Monthly Rate	Five Year Monthly Rate	Seven Year Monthly Rate	
						(D)
Illinois	6,000.00	5,750.00	5,500.00	5,250.00	5,000.00	
Indiana	6,000.00	5,750.00	5,500.00	5,250.00	5,000.00	
Michigan	6,000.00	6,250.00	5,830.00	5,620.00	5,400.00	
North Carolina	6,000.00	5,750.00	5,500.00	5,250.00	5,000.00	
Ohio	6,000.00	6,250.00	5,830.00	5,620.00	5,400.00	
						(D)
South Carolina	6,000.00	6,250.00	5,830.00	5,620.00	5,400.00	
						(D)
Wisconsin	6,000.00	6,250.00	5,830.00	5,620.00	5,400.00	

Custom Connect CDL Link - Ring Route with Premise Fiber Meet Provided - OC48#

Jurisdiction	Nonrecurring Charge	One Year Monthly Rate	Three Year Monthly Rate	Five Year Monthly Rate	Seven Year Monthly Rate	
						(D)
Illinois	3,000.00	2,045.00	2,020.00	1,995.00	1,970.00	
Indiana	3,000.00	2,045.00	2,020.00	1,995.00	1,970.00	
Michigan	3,000.00	2,300.00	2,250.00	2,220.00	2,200.00	
North Carolina	3,000.00	2,045.00	2,020.00	1,995.00	1,970.00	
Ohio	3,000.00	2,300.00	2,250.00	2,220.00	2,200.00	
						(D)
South Carolina	3,000.00	2,300.00	2,250.00	2,220.00	2,200.00	
						(D)
Wisconsin	3,000.00	2,300.00	2,250.00	2,220.00	2,200.00	

*These rates and charges apply to both Price Bands and N-MSA rates and charges.
Service availability limited. Refer to # footnote on Page 20-9.

© 2022 Frontier Communications Parent, Inc. All rights reserved.

20. Ethernet Private Line

(L) Rates and Charges* (Cont'd)

(33) Custom Connect CDL Link - Ring Route with Premise Multiplexer Provided – OC192#

Jurisdiction: _____, Illinois, (C)
Indiana, Michigan, North Carolina, Ohio, _____, (C)
South Carolina, _____, (C)
and Wisconsin

	Nonrecurring Charge	One Year Monthly Rate	Three Year Monthly Rate	Five Year Monthly Rate	Seven Year Monthly Rate
OC192	$12,000.00	$15,625.00	$14,900.00	$14,050.00	$13,500.00

Custom Connect CDL Link - Ring Route with Premise Fiber Meet Provided – OC192#

	Nonrecurring Charge	One Year Monthly Rate	Three Year Monthly Rate	Five Year Monthly Rate	Seven Year Monthly Rate
OC192	$3,000.00	2,300.00	2,250.00	2,220.00	2,200.00

Service availability limited. Refer to # footnote on Page 20-9.

* These rates and charges apply to both Price Bands and N-MSA rates and charges.

© 2022 Frontier Communications Parent, Inc. All rights reserved.

20. Ethernet Private Line (Cont'd

(L) Rates and Charges* (Cont'd)

(33) Custom Connect CDL Link - Single Route#

Jurisdiction: _____, (C)
Illinois, Indiana, Michigan, North Carolina, Ohio
_____, South Carolina, (C)
_____ and Wisconsin (C)

	Nonrecurring Charge	One Year Monthly Rate	Three Year Monthly Rate	Five Year Monthly Rate	Seven Year Monthly Rate
1.25 Gbps	$6,000.00	$3,570.00	$3,450.00	$3,330.00	$3,210.00

Custom Connect CDL Link - Diverse Route#

	Nonrecurring Charge	One Year Monthly Rate	Three Year Monthly Rate	Five Year Monthly Rate	Seven Year Monthly Rate
1.25 Gbps	$6,000.00	$3,835.00	$3,730.00	$3,625.00	$3,525.00

Service availability limited. Refer to # footnote on Page 20-9.

* These rates and charges apply to both Price Bands and N-MSA rates and charges.

© 2022 Frontier Communications Parent, Inc. All rights reserved.

20. Ethernet Private Line (Cont'd

(L) Rates and Charges* (Cont'd)

(33) Custom Connect CDL Link - Single Route #

Jurisdiction: _____, (C)
Illinois, Indiana, Michigan, North Carolina, Ohio
_____, South Carolina, (C)
_____ and Wisconsin (C)

	Nonrecurring Charge	One Year Monthly Rate	Three Year Monthly Rate	Five Year Monthly Rate	Seven Year Monthly Rate
2.5 Gbps	$6,000.00	$4,230.00	$4,110.00	$3,990.00	$3,870.00

Custom Connect CDL Link - Diverse Route #

	Nonrecurring Charge	One Year Monthly Rate	Three Year Monthly Rate	Five Year Monthly Rate	Seven Year Monthly Rate
2.5 Gbps	$6,000.00	$4,595.00	$4,485.00	$4,375.00	$4,265.00

Service availability limited. Refer to # footnote on Page 20-9.

* These rates and charges apply to both Price Bands and N-MSA rates and charges.

© 2022 Frontier Communications Parent, Inc. All rights reserved.

20. Ethernet Private Line (Cont'd

(L) Rates and Charges* (Cont'd)

(33) Custom Connect CDL Link - Single Route with Optical Cross Connect - OC3#

Jurisdiction: _____, (C)
Illinois, Indiana, Michigan, North Carolina, Ohio,
_____, South Carolina, (C)
_____ and Wisconsin (C)

	Nonrecurring Charge	One Year Monthly Rate	Three Year Monthly Rate	Five Year Monthly Rate	Seven Year Monthly Rate
OC3	$1,000.00	$715.00	$690.00	$675.00	$650.00

Service availability limited. Refer to # footnote on Page 20-9.

* These rates and charges apply to both Price Bands and N-MSA rates and charges.

© 2022 Frontier Communications Parent, Inc. All rights reserved.

20. Ethernet Private Line (Cont'd

(L) Rates and Charges* (Cont'd)

(33) Custom Connect CDL Link - Single Route with Optical Cross Connect - OC3c#

Jurisdiction: _____, (C)
Illinois, Indiana, Michigan, North Carolina, Ohio,
_____, South Carolina, (C)
_____ and Wisconsin (C)

	Nonrecurring Charge	One Year Monthly Rate	Three Year Monthly Rate	Five Year Monthly Rate	Seven Year Monthly Rate
OC3c	$1,000.00	$715.00	$690.00	$675.00	$650.00

Service availability limited. Refer to # footnote on Page 20-9.

* These rates and charges apply to both Price Bands and N-MSA rates and charges.

© 2022 Frontier Communications Parent, Inc. All rights reserved.

20. Ethernet Private Line (Cont'd

(L) Rates and Charges* (Cont'd)

(33) Custom Connect CDL Link - Single Route with Optical Cross Connect - OC12#

Jurisdiction: , _____, (C)
Illinois, Indiana, Michigan, North Carolina, Ohio,
_____, South Carolina, (C)
_____ and Wisconsin (C)

	Nonrecurring Charge	One Year Monthly Rate	Three Year Monthly Rate	Five Year Monthly Rate	Seven Year Monthly Rate
OC12	$2,500.00	$1,640.00	$1,590.00	$1,550.00	$1,500.00

Service availability limited. Refer to # footnote on Page 20-9.

* These rates and charges apply to both Price Bands and N-MSA rates and charges.

© 2022 Frontier Communications Parent, Inc. All rights reserved.

20. Ethernet Private Line (Cont'd

(L) Rates and Charges* (Cont'd)

(33) Custom Connect CDL Link - Single Route with Optical Cross Connect - OC12c#

Jurisdiction: _____, (C)
Illinois, Indiana, Michigan, North Carolina, Ohio,
_____, South Carolina, (C)
_____ and Wisconsin (C)

	Nonrecurring Charge	One Year Monthly Rate	Three Year Monthly Rate	Five Year Monthly Rate	Seven Year Monthly Rate
OC12c	$2,500.00	$1,640.00	$1,590.00	$1,550.00	$1,500.00

Service availability limited. Refer to # footnote on Page 20-9.

* These rates and charges apply to both Price Bands and N-MSA rates and charges.

© 2022 Frontier Communications Parent, Inc. All rights reserved.

20. Ethernet Private Line

(L) Rates and Charges* (Cont'd)

(33) Custom Connect CDL Link - Single Route with Optical Cross Connect – OC48#

Jurisdiction: _____, (C)
Illinois, Indiana, Michigan, North Carolina, Ohio,
_____, South Carolina, (C)
_____ and Wisconsin (C)

	Nonrecurring Charge	One Year Monthly Rate	Three Year Monthly Rate	Five Year Monthly Rate	Seven Year Monthly Rate
OC48	$2,500.00	$3,450.00	$3,350.00	$3,275.00	$3,150.00

Service availability limited. Refer to # footnote on Page 20-9.

* These rates and charges apply to both Price Bands and N-MSA rates and charges.

© 2022 Frontier Communications Parent, Inc. All rights reserved.

20. Ethernet Private Line

(L) Rates and Charges* (Cont'd)

(33) Custom Connect CDL Link - Single Route with Optical Cross Connect – OC48c#

Jurisdiction: _____, (C)
Illinois, Indiana, Michigan, North Carolina, Ohio,
_____, South Carolina, (C)
_____ and Wisconsin (C)

	Nonrecurring Charge	One Year Monthly Rate	Three Year Monthly Rate	Five Year Monthly Rate	Seven Year Monthly Rate
OC48c	$2,500.00	$3,450.00	$3,350.00	$3,275.00	$3,150.00

Service availability limited. Refer to # footnote on Page 20-9.

* These rates and charges apply to both Price Bands and N-MSA rates and charges.

© 2022 Frontier Communications Parent, Inc. All rights reserved.

20. Ethernet Private Line

(L) Rates and Charges* (Cont'd)

(33) Custom Connect CDL Link - Single Route with Optical Cross Connect – OC192#

Jurisdiction: _____, (C)
Illinois, Indiana, Michigan, North Carolina, Ohio
_____, South Carolina, (C)
_____ and Wisconsin (C

	Nonrecurring Charge	One Year Monthly Rate	Three Year Monthly Rate	Five Year Monthly Rate	Seven Year Monthly Rate
OC192	$2,500.00	$7,250.00	$7,025.00	$6,850.00	$6,625.00

Service availability limited. Refer to # footnote on Page 20-9.

* These rates and charges apply to both Price Bands and N-MSA rates and charges.

© 2022 Frontier Communications Parent, Inc. All rights reserved.

20. Ethernet Private Line (Cont'd

(L) Rates and Charges* (Cont'd)

(33) Custom Connect - Rider - DS1

Jurisdiction	Monthly Rate	
Illinois	75.00	(D)
Indiana	75.00	
Michigan	75.00	
North Carolina	75.00	
Ohio	75.00	
South Carolina	75.00	(D)
Wisconsin	75.00	(D)

*These rates and charges apply to both Price Bands and N-MSA rates and charges.

© 2022 Frontier Communications Parent, Inc. All rights reserved.

20. Ethernet Private Line (Cont'd

(L) Rates and Charges* (Cont'd)

(33) Custom Connect - Rider – DS3

Jurisdiction	Monthly Rate	
Illinois	250.00	(D)
Indiana	250.00	
Michigan	250.00	
North Carolina	250.00	
Ohio	250.00	
South Carolina	250.00	(D)
Wisconsin	250.00	(D)

*These rates and charges apply to both Price Bands and N-MSA rates and charges.

© 2022 Frontier Communications Parent, Inc. All rights reserved.

20. Ethernet Private Line (Cont'd

(L) Rates and Charges* (Cont'd)

(33) Custom Connect - Rider – STS1

Jurisdiction	Monthly Rate	
Illinois	240.00	(D)
Indiana	240.00	
Michigan	250.00	
North Carolina	240.00	
Ohio	250.00	
South Carolina	250.00	(D)
Wisconsin	250.00	(D)

*These rates and charges apply to both Price Bands and N-MSA rates and charges.

© 2022 Frontier Communications Parent, Inc. All rights reserved.

20. Ethernet Private Line (Cont'd

(L) Rates and Charges* (Cont'd)

(33) Custom Connect - Rider – OC3/OC3c#

Jurisdiction	Monthly Rate	
Illinois	750.00	(D)
Indiana	750.00	
Michigan	750.00	
North Carolina	750.00	
Ohio	750.00	
South Carolina	750.00	(D)
Wisconsin	750.00	(D)

Service availability limited. Refer to # footnote on Page 20-9.

*These rates and charges apply to both Price Bands and N-MSA rates and charges.

© 2022 Frontier Communications Parent, Inc. All rights reserved.

20. Ethernet Private Line (Cont'd

(L) Rates and Charges* (Cont'd)

(33) Custom Connect - Rider – STM1#

Jurisdiction	Monthly Rate	
Illinois	NA	(D)
Indiana	NA	(D)
North Carolina	NA	

Custom Connect - Rider - E1

Jurisdiction	Monthly Rate	
Illinois	NA	(D)
Indiana	NA	(D)
North Carolina	NA	

Service availability limited. Refer to # footnote on Page 20-9.

*These rates and charges apply to both Price Bands and N-MSA rates and charges.

© 2022 Frontier Communications Parent, Inc. All rights reserved.

20. Ethernet Private Line (Cont'd

(L) Rates and Charges** (Cont'd)

(33) Custom Connect - Rider – OC12/OC12C#

Jurisdiction	Monthly Rate	
Illinois	2,250.00	(D)
Indiana	2,250.00	
Michigan	2,250.00	
North Carolina	2,250.00	
Ohio	2,250.00	(D)
South Carolina	2,250.00	(D)
Wisconsin	2,250.00	

Service availability limited. Refer to # footnote on Page 20-9.

**These rates and charges apply to both Price Bands and N-MSA rates and charges.

© 2022 Frontier Communications Parent, Inc. All rights reserved.

20. Ethernet Private Line

(L) Rates and Charges* (Cont'd)

(33) Custom Connect - Rider – OC48/OC48c#

Jurisdiction	Monthly Rate	
Illinois	4,500.00	(D)
Indiana	4,500.00	
Michigan	4,500.00	
North Carolina	4,500.00	
Ohio	4,500.00	(D)
South Carolina	4,500.00	(D)
Wisconsin	4,500.00	

Service availability limited. Refer to # footnote on Page 20-9.

*These rates and charges apply to both Price Bands and N-MSA rates and charges.

© 2022 Frontier Communications Parent, Inc. All rights reserved.

20. Ethernet Private Line (Cont'd

(L) Rates and Charges* (Cont'd)

(33) Custom Connect –
Optional 4 Fiber, 1+1 Protection#

Jurisdiction	Monthly Rate	
_____,		(D)
Illinois, Indiana, Michigan, North Carolina, Ohio, _____,		(C)
South Carolina, _____ & Wisconsin		(C)
OC3c/OC3, Per CDL	$ 375.00	
OC12c/OC12, Per CDL	1,125.00	
OC48c/OC48, Per CDL	2,250.00	

Service availability limited. Refer to # footnote on Page 20-9.

* These rates and charges apply to both Price Bands and N-MSA rates and charges.

© 2022 Frontier Communications Parent, Inc. All rights reserved.

20. Ethernet Private Line (Cont'd

(L) Rates and Charges* (Cont'd)

(33) Custom Connect - Shared Transport - DS1

Jurisdiction	Per Mile Monthly Rate	
Illinois	12.00	(D)
Indiana	12.00	
Michigan	12.00	
North Carolina	12.00	
Ohio	12.00	
South Carolina	12.00	(D)
Wisconsin	12.00	(D)

Custom Connect - Shared Transport - DS3/STS1

Jurisdiction	Per Mile Monthly Rate	
Illinois	85.66	(D)
Indiana	46.88	
Michigan	105.00	
North Carolina	75.02	
Ohio	105.00	
South Carolina	105.00	(D)
Wisconsin	105.00	(D)

*These rates and charges apply to both Price Bands and N-MSA rates and charges.

© 2022 Frontier Communications Parent, Inc. All rights reserved.

20. Ethernet Private Line (Cont'd

(L) Rates and Charges** (Cont'd)

(33) Custom Connect - Shared Transport – OC3/OC3c#

Jurisdiction	Per Mile Monthly Rate	
Illinois	210.00	(D)
Indiana	210.00	
Michigan	225.00	
North Carolina	210.00	
Ohio	225.00	
South Carolina	225.00	(D)
Wisconsin	225.00	(D)

Custom Connect - Shared Transport - OC12/OC12c#

Jurisdiction	Per Mile Monthly Rate	
Illinois	450.00	(D)
Indiana	450.00	
Michigan	450.00	
North Carolina	450.00	
Ohio	450.00	
South Carolina	450.00	(D)
Wisconsin	450.00	(D)

Service availability limited. Refer to # footnote on Page 20-9.

**These rates and charges apply to both Price Bands and N-MSA rates and charges.

© 2022 Frontier Communications Parent, Inc. All rights reserved.

20. Ethernet Private Line (Cont'd

(L) Rates and Charges* (Cont'd)

(33) Custom Connect - Shared Transport – E1

Jurisdiction	Per Mile Monthly Rate	
Illinois	NA	(D)
Indiana	NA	(D)
North Carolina	NA	

*These rates and charges apply to both Price Bands and N-MSA rates and charges.

© 2022 Frontier Communications Parent, Inc. All rights reserved.

20. Ethernet Private Line (Cont'd

(L) Rates and Charges* (Cont'd)

(33) Custom Connect - Shared Transport – OC48/OC48c#

Jurisdiction: _____, (C)
Illinois, Indiana, North Carolina, _____, (C)
South Carolina,
_____ and Wisconsin (C)

	Per Mile Monthly Rate
OC48/OC48c	$1125.00

Service availability limited. Refer to # footnote on Page 20-9.

* These rates and charges apply to both Price Bands and N-MSA rates and charges.

© 2022 Frontier Communications Parent, Inc. All rights reserved.

20. Ethernet Private Line (Cont'd

(L) Rates and Charges* (Cont'd)

(33) Custom Connect – Dedicated Transport - OC3/OC3c#

Jurisdiction	Per Mile Monthly Rate	
Illinois	170.00	(D)
Indiana	170.00	
Michigan	170.00	
North Carolina	170.00	
Ohio	170.00	
South Carolina	170.00	(D)
Wisconsin	170.00	(D)

Custom Connect - Dedicated Transport - OC12/OC12c#

Jurisdiction	Per Mile Monthly Rate	
Illinois	240.00	(D)
Indiana	240.00	
Michigan	240.00	
North Carolina	240.00	
Ohio	240.00	
South Carolina	240.00	(D)
Wisconsin	240.00	(D)

*These rates and charges apply to both Price Bands and N-MSA rates and charges.
Service availability limited. Refer to # footnote on Page 20-9.

© 2022 Frontier Communications Parent, Inc. All rights reserved.

20. Ethernet Private Line (Cont'd

(L) Rates and Charges* (Cont'd)

(33) Custom Connect – Dedicated Transport - OC48/OC48c#

Jurisdiction	Per Mile Monthly Rate	
Illinois	370.00	(D)
Indiana	370.00	
Michigan	380.00	
North Carolina	370.00	
Ohio	380.00	(D)
South Carolina	380.00	(D)
Wisconsin	380.00	

Service availability limited. Refer to # footnote on Page 20-9.

*These rates and charges apply to both Price Bands and N-MSA rates and charges.

© 2022 Frontier Communications Parent, Inc. All rights reserved.

20. Ethernet Private Line (Cont'd

(L) Rates and Charges* (Cont'd)

(33) Custom Connect – Dedicated Transport #

Jurisdiction: _____, (C)
Illinois, Indiana, Michigan, North Carolina, Ohio,
_____, South Carolina, (C)
_____ and Wisconsin (C)

	Per Mile Monthly Rate
OC192 TSRDS	$550.00
1.25 Gbps TSRAS	295.00
2.5 Gbps TSRBS	370.00

Service availability limited. Refer to # footnote on Page 20-9.

* These rates and charges apply to both Price Bands and N-MSA rates and charges.

© 2022 Frontier Communications Parent, Inc. All rights reserved.

FACILITIES FOR INTERSTATE ACCESS

20. Ethernet Private Line (Cont'd

(L) Rates and Charges* (Cont'd)

(33) (Reserved for Future Use)

© 2022 Frontier Communications Parent, Inc. All rights reserved

20. Ethernet Private Line (Cont'd

(L) Rates and Charges* (Cont'd)

(33) (Reserved for Future Use)

© 2022 Frontier Communications Parent, Inc. All rights reserved

20. Ethernet Private Line (Cont'd

(L) Rates and Charges (Cont'd)

(34) Reserved for Future Use

© 2022 Frontier Communications Parent, Inc. All rights reserved

20. Ethernet Private Line (Cont'd

(L) Rates and Charges (Cont'd)

(35) Reserved for Future Use

© 2022 Frontier Communications Parent, Inc. All rights reserved

20. Ethernet Private Line (Cont'd

(L) Rates and Charges (Cont'd)

(36) Reserved for Future Use

© 2022 Frontier Communications Parent, Inc. All rights reserved

20. Ethernet Private Line (Cont'd

(L) Rates and Charges (Cont'd)

(37) Reserved for Future Use

© 2022 Frontier Communications Parent, Inc. All rights reserved

20. Ethernet Private Line (Cont'd

(L) Rates and Charges (Cont'd)

(38) Reserved for Future Use

© 2022 Frontier Communications Parent, Inc. All rights reserved

20. Ethernet Private Line (Cont'd

(L) Rates and Charges (Cont'd)

(39) Reserved for Future Use

© 2022 Frontier Communications Parent, Inc. All rights reserved

20. Ethernet Private Line (Cont'd

(L) Rates and Charges (Cont'd)

(40) Reserved for Future Use

© 2022 Frontier Communications Parent, Inc. All rights reserved

20. Ethernet Private Line (Cont'd

(L) Rates and Charges (Cont'd)

(41) Reserved for Future Use

© 2022 Frontier Communications Parent, Inc. All rights reserved

20. Ethernet Private Line (Cont'd

(L) Rates and Charges (Cont'd)

(42) Reserved for Future Use

© 2022 Frontier Communications Parent, Inc. All rights reserved

20. Ethernet Private Line (Cont'd

(L) Rates and Charges (Cont'd)

(43) Reserved for Future Use

© 2022 Frontier Communications Parent, Inc. All rights reserved

20. Ethernet Private Line (Cont'd

(L) Rates and Charges (Cont'd)

(44) Reserved for Future Use

© 2022 Frontier Communications Parent, Inc. All rights reserved

20. Ethernet Private Line (Cont'd

(L) Rates and Charges (Cont'd)

(45) Reserved for Future Use

© 2022 Frontier Communications Parent, Inc. All rights reserved

20. Ethernet Private Line (Cont'd

(L) Rates and Charges** (Cont'd)

(46) Reserved

© 2022 Frontier Communications Parent, Inc. All rights reserved

20. Ethernet Private Line (Cont'd

(L) Rates and Charges** (Cont'd)

(47) Transport - LAN-Wide OC12

	Two Year Monthly Rate
Jurisdiction	

(D)

* Grandfathered to existing service effective December 26, 1998.
* These rates and charges apply to both Price Bands and N-MSA rates and charges.

© 2022 Frontier Communications Parent, Inc. All rights reserved

20. Ethernet Private Line (Cont'd

(L) Rates and Charges** (Cont'd)

(48) Reserved

* Grandfathered to existing service effective December 26, 1998.
* These rates and charges apply to both Price Bands and N-MSA rates and charges.

© 2022 Frontier Communications Parent, Inc. All rights reserved

20. Ethernet Private Line (Cont'd

(L) Rates and Charges (Cont'd)

(49) Reserved for Future Use

© 2022 Frontier Communications Parent, Inc. All rights reserved

20. Ethernet Private Line (Cont'd

(L) Rates and Charges (Cont'd)

(50) Reserved for Future Use

© 2022 Frontier Communications Parent, Inc. All rights reserved

20. Ethernet Private Line (Cont'd

(L) Rates and Charges** (Cont'd)

(51) Reserved

* Grandfathered to existing service effective December 26, 1998.
*These rates and charges apply to both Price Bands and N-MSA rates and charges.

© 2022 Frontier Communications Parent, Inc. All rights reserved

20. Ethernet Private Line (Cont'd

(L) Rates and Charges** (Cont'd)

(52) Transport - LAN-Wide Premium - OC12

Jurisdiction	Two Year Monthly Rate
	(D)

* Grandfathered to existing service effective December 26, 1998.
** These rates and charges apply to both Price Bands and N-MSA rates and charges.

© 2022 Frontier Communications Parent, Inc. All rights reserved

20. Ethernet Private Line (Cont'd

(L) Rates and Charges** (Cont'd)

(53) Reserved

© 2022 Frontier Communications Parent, Inc. All rights reserved

20. Ethernet Private Line (Cont'd

(L) Rates and Charges (Cont'd)

(54) Reserved for Future Use

© 2022 Frontier Communications Parent, Inc. All rights reserved

20. Ethernet Private Line (Cont'd

(L) Rates and Charges (Cont'd)

(55) Reserved for Future Use

© 2022 Frontier Communications Parent, Inc. All rights reserved

20. Ethernet Private Line (Cont'd

(L) Rates and Charges** (Cont'd)

(56) Reserved

© 2022 Frontier Communications Parent, Inc. All rights reserved

20. Ethernet Private Line (Cont'd

(L) Rates and Charges** (Cont'd)

(57) Transport - Point-to-Point Per Mile - OC12

Jurisdiction	Two Year Monthly Rate	
		(D)

* Grandfathered to existing service effective December 26, 1998.

** These rates and charges apply to both Price Bands and N-MSA rates and charges.

© 2022 Frontier Communications Parent, Inc. All rights reserved

20. Ethernet Private Line (Cont'd

(L) Rates and Charges** (Cont'd)

(58) Reserved

* Grandfathered to existing service effective December 26, 1998.
** These rates and charges apply to both Price Bands and N-MSA rates and charges.

© 2022 Frontier Communications Parent, Inc. All rights reserved

20. Ethernet Private Line (Cont'd

(L) Rates and Charges (Cont'd)

(59) Reserved for Future Use

© 2022 Frontier Communications Parent, Inc. All rights reserved

20. Ethernet Private Line (Cont'd

(L) Rates and Charges (Cont'd)

(60) Reserved for Future Use

© 2022 Frontier Communications Parent, Inc. All rights reserved

20. Ethernet Private Line (Cont'd

(L) Rates and Charges (Cont'd)

(61) Reserved for Future Use

© 2022 Frontier Communications Parent, Inc. All rights reserved

20. Ethernet Private Line (Cont'd

(L) Rates and Charges (Cont'd)

(62) Reserved for Future Use

© 2022 Frontier Communications Parent, Inc. All rights reserved

20. Ethernet Private Line (Cont'd

(L) Rates and Charges (Cont'd)

(63) Reserved for Future Use

© 2022 Frontier Communications Parent, Inc. All rights reserved

20. Ethernet Private Line (Cont'd

(L) Rates and Charges (Cont'd)

(64) Reserved for Future Use

© 2022 Frontier Communications Parent, Inc. All rights reserved

20. Ethernet Private Line (Cont'd

(L) Rates and Charges** (Cont'd)

(65) Reserved

* Grandfathered to existing service effective December 26, 1998.
** These rates and charges apply to both Price Bands and N-MSA rates and charges.

© 2022 Frontier Communications Parent, Inc. All rights reserved

20. Ethernet Private Line (Cont'd

(L) Rates and Charges** (Cont'd)

(66) Transport - Banded Optical - DS0 (Wholly Provided)

Jurisdiction	One Year Monthly Rate
Illinois	
0 miles	$100.00
1 - 10 miles	102.00
11 - 20 miles	104.00
21 + miles	106.00
Indiana	
0 miles	$100.00
1 - 10 miles	102.00
11 - 20 miles	104.00
21 + miles	106.00

** These rates and charges apply to both Price Bands and N-MSA rates and charges.

© 2022 Frontier Communications Parent, Inc. All rights reserved

20. Ethernet Private Line (Cont'd

(L) Rates and Charges** (Cont'd)

(66) Transport - Banded Optical - DS0 (Wholly Provided) (Cont'd)

Jurisdiction	Three Year Monthly Rate
Illinois	
0 miles	$93.00
1 - 10 miles	95.00
11 - 20 miles	97.00
21 + miles	99.00
Indiana	
0 miles	$93.00
1 - 10 miles	95.00
11 - 20 miles	97.00
21 + miles	99.00

** These rates and charges apply to both Price Bands and N-MSA rates and charges.

© 2022 Frontier Communications Parent, Inc. All rights reserved

20. Ethernet Private Line (Cont'd

(L) Rates and Charges** (Cont'd)

(66) Transport - Banded Optical - DS0 (Wholly Provided) (Cont'd)

Jurisdiction	Five Year Monthly Rate
Illinois	
0 miles	$90.00
1 - 10 miles	92.00
11 - 20 miles	94.00
21 + miles	96.00
Indiana	
0 miles	$90.00
1 - 10 miles	92.00
11 - 20 miles	94.00
21 + miles	96.00

** These rates and charges apply to both Price Bands and N-MSA rates and charges.

© 2022 Frontier Communications Parent, Inc. All rights reserved

20. Ethernet Private Line (Cont'd

(L) Rates and Charges** (Cont'd)

(66) Transport - Banded Optical - DS0 (Wholly Provided) (Cont'd)

Jurisdiction	Seven Year Monthly Rate
Illinois	
0 miles	$87.00
1 - 10 miles	89.00
11 - 20 miles	91.00
21 + miles	93.00
Indiana	
0 miles	$87.00
1 - 10 miles	89.00
11 - 20 miles	91.00
21 + miles	93.00

** These rates and charges apply to both Price Bands and N-MSA rates and charges.

© 2022 Frontier Communications Parent, Inc. All rights reserved

20. Ethernet Private Line (Cont'd

(L) Rates and Charges* (Cont'd)

(66) Transport - Banded Optical - DS0 (Wholly Provided) (Cont'd)

Jurisdiction	One Year Monthly Rate	
North Carolina		
0 miles	$100.00	(D)
1 - 10 miles	102.00	(D)
11 - 20 miles	104.00	(D)
21 + miles	106.00	(D)
		(D)
		(D)
		(D)
		(D)
		(D)
		(D)

* These rates and charges apply to both Price Bands and N-MSA rates and charges.

© 2022 Frontier Communications Parent, Inc. All rights reserved

20. Ethernet Private Line (Cont'd

(L) Rates and Charges* (Cont'd)

(66) Transport - Banded Optical - DS0 (Wholly Provided) (Cont'd)

Jurisdiction	Three Year Monthly Rate	
North Carolina		
0 miles	$93.00	(D)
1 - 10 miles	95.00	(D)
11 - 20 miles	97.00	(D)
21 + miles	99.00	(D)
		(D)
		(D)
		(D)
		(D)
		(D)
		(D)

* These rates and charges apply to both Price Bands and N-MSA rates and charges.

© 2022 Frontier Communications Parent, Inc. All rights reserved

20. Ethernet Private Line (Cont'd

(L) Rates and Charges* (Cont'd)

(66) Transport - Banded Optical - DS0 (Wholly Provided) (Cont'd)

Jurisdiction	Five Year Monthly Rate	
North Carolina		
0 miles	$90.00	(D)
1 - 10 miles	92.00	(D)
11 - 20 miles	94.00	(D)
21 + miles	96.00	(D)
		(D)
		(D)
		(D)
		(D)
		(D)
		(D)
		(D)
		(D)
		(D)
		(D0

* These rates and charges apply to both Price Bands and N-MSA rates and charges.

© 2022 Frontier Communications Parent, Inc. All rights reserved

20. Ethernet Private Line (Cont'd

(L) Rates and Charges* (Cont'd)

(66) Transport - Banded Optical - DS0 (Wholly Provided) (Cont'd)

Jurisdiction	Seven Year Monthly Rate	
North Carolina		
0 miles	$87.00	(D)
1 - 10 miles	89.00	(D)
11 - 20 miles	91.00	(D)
21 + miles	93.00	(D)
		(D)
		(D)
		(D)
		(D)
		(D)
		(D)

* These rates and charges apply to both Price Bands and N-MSA rates and charges.

© 2022 Frontier Communications Parent, Inc. All rights reserved

20. Ethernet Private Line (Cont'd

(L) Rates and Charges** (Cont'd)

(66) Transport - Banded Optical – DS1 (Wholly Provided)

Jurisdiction	One Year Monthly Rate
Illinois	
0 miles	$205.00
1 - 10 miles	285.00
11 - 20 miles	305.00
21 + miles	325.00
Indiana	
0 miles	$205.00
1 - 10 miles	285.00
11 - 20 miles	305.00
21 + miles	340.00

** These rates and charges apply to both Price Bands and N-MSA rates and charges.

© 2022 Frontier Communications Parent, Inc. All rights reserved

20. Ethernet Private Line (Cont'd

(L) Rates and Charges** (Cont'd)

(66) Transport - Banded Optical – DS1 (Wholly Provided) (Cont'd)

Jurisdiction	Three Year Monthly Rate
Illinois	
0 miles	$191.00
1 - 10 miles	268.00
11 - 20 miles	289.00
21 + miles	307.00
Indiana	
0 miles	$191.00
1 - 10 miles	273.00
11 - 20 miles	304.00
21 + miles	319.00

** These rates and charges apply to both Price Bands and N-MSA rates and charges.

© 2022 Frontier Communications Parent, Inc. All rights reserved

20. Ethernet Private Line (Cont'd

(L) Rates and Charges** (Cont'd)

(66) Transport - Banded Optical – DS1 (Wholly Provided) (Cont'd)

Jurisdiction	Five Year Monthly Rate
Illinois	
0 miles	$175.00
1 - 10 miles	245.00
11 - 20 miles	260.00
21 + miles	285.00
Indiana	
0 miles	$185.00
1 - 10 miles	265.00
11 - 20 miles	295.00
21 + miles	315.00

** These rates and charges apply to both Price Bands and N-MSA rates and charges.

© 2022 Frontier Communications Parent, Inc. All rights reserved

20. Ethernet Private Line (Cont'd

(L) Rates and Charges** (Cont'd)

(66) Transport - Banded Optical – DS1 (Wholly Provided) (Cont'd)

Jurisdiction	Seven Year Monthly Rate
Illinois	
0 miles	$173.00
1 – 10 miles	240.00
11 - 20 miles	255.00
21 + miles	276.00
Indiana	
0 miles	$173.00
1 - 10 miles	235.00
11 - 20 miles	258.00
21 + miles	276.00

** These rates and charges apply to both Price Bands and N-MSA rates and charges.

© 2022 Frontier Communications Parent, Inc. All rights reserved

20. Ethernet Private Line (Cont'd

(L) Rates and Charges* (Cont'd)

(66) Transport - Banded Optical – DS1 (Wholly Provided) (Cont'd)

Jurisdiction	One Year Monthly Rate	
North Carolina		
0 miles	$205.00	(D)
1 - 10 miles	285.00	(D)
11 - 20 miles	305.00	(D)
21 + miles	350.00	(D)
		(D)
		(D)
		(D)
		(D)
		(D)
		(D)
		(D)
		(D)
		(D)

* These rates and charges apply to both Price Bands and N-MSA rates and charges.

© 2022 Frontier Communications Parent, Inc. All rights reserved

20. Ethernet Private Line (Cont'd

(L) Rates and Charges* (Cont'd)

(66) Transport - Banded Optical – DS1 (Wholly Provided) (Cont'd)

Jurisdiction	Three Year Monthly Rate	
North Carolina		
0 miles	$186.00	(D)
1 - 10 miles	258.00	(D)
11 - 20 miles	279.00	(D)
21 + miles	302.00	(D)
		(D)
		(D)
		(D)
		(D)
		(D)
		(D)

* These rates and charges apply to both Price Bands and N-MSA rates and charges.

© 2022 Frontier Communications Parent, Inc. All rights reserved

20. Ethernet Private Line (Cont'd

(L) Rates and Charges* (Cont'd)

(66) Transport - Banded Optical – DS1 (Wholly Provided) (Cont'd)

Jurisdiction	Five Year Monthly Rate	
North Carolina		
0 miles	$180.00	(D)
1 - 10 miles	250.00	(D)
11 - 20 miles	270.00	(D)
21 + miles	290.00	(D)
		(D)
		(D)
		(D)
		(D)
		(D)
		(D)

* These rates and charges apply to both Price Bands and N-MSA rates and charges.

© 2022 Frontier Communications Parent, Inc. All rights reserved

20. Ethernet Private Line (Cont'd

(L) Rates and Charges* (Cont'd)

(66) Transport - Banded Optical – DS1 (Wholly Provided) (Cont'd)

Jurisdiction	Seven Year Monthly Rate	
North Carolina		
0 miles	$168.00	(D)
1 - 10 miles	235.00	(D)
11 - 20 miles	253.00	(D)
21 + miles	271.00	(D)
		(D)
		(D)
		(D)
		(D)
		(D)
		(D)

* These rates and charges apply to both Price Bands and N-MSA rates and charges.

© 2022 Frontier Communications Parent, Inc. All rights reserved

20. Ethernet Private Line (Cont'd

(L) Rates and Charges* (Cont'd)

(66) Transport - Banded Optical – DS3 (Wholly Provided)

Jurisdiction	One Year Monthly Rate
Illinois	
0 miles	$1,800.00
1 - 10 miles	2,700.00
11 - 20 miles	4,000.00
21 + miles	5,200.00
Indiana	
0 miles	$1,800.00
1 - 10 miles	2,600.00
11 - 20 miles	4,000.00
21 + miles	5,200.00

* These rates and charges apply to both Price Bands and N-MSA rates and charges.

© 2022 Frontier Communications Parent, Inc. All rights reserved

20. Ethernet Private Line (Cont'd

(L) Rates and Charges* (Cont'd)

(66) Transport - Banded Optical – DS3 (Wholly Provided) (Cont'd)

Jurisdiction	Three Year Monthly Rate
Illinois	
0 miles	$1,700.00
1 - 10 miles	2,550.00
11 - 20 miles	3,800.00
21 + miles	4,900.00
Indiana	
0 miles	$1,700.00
1 - 10 miles	2,550.00
11 - 20 miles	3,800.00
21 + miles	4,900.00

* These rates and charges apply to both Price Bands and N-MSA rates and charges.

© 2022 Frontier Communications Parent, Inc. All rights reserved

20. Ethernet Private Line (Cont'd

(L) Rates and Charges* (Cont'd)

(66) Transport - Banded Optical – DS3 (Wholly Provided) (Cont'd)

Jurisdiction	Five Year Monthly Rate
Illinois	
0 miles	$1,600.00
1 – 10 miles	2,350.00
11 - 20 miles	3,500.00
21 + miles	4,600.00
Indiana	
0 miles	$1,600.00
1 - 10 miles	2,350.00
11 - 20 miles	3,500.00
21 + miles	4,600.00

* * These rates and charges apply to both Price Bands and N-MSA rates and charges.

© 2022 Frontier Communications Parent, Inc. All rights reserved

20. Ethernet Private Line (Cont'd

(L) Rates and Charges* (Cont'd)

(66) Transport - Banded Optical – DS3 (Wholly Provided) (Cont'd)

Jurisdiction	Seven Year Monthly Rate
Illinois	
0 miles	$1,500.00
1 - 10 miles	2,200.00
11 - 20 miles	3,200.00
21 + miles	4,300.00
Indiana	
0 miles	$1,500.00
1 - 10 miles	2,200.00
11 - 20 miles	3,200.00
21 + miles	4,300.00

* These rates and charges apply to both Price Bands and N-MSA rates and charges.

© 2022 Frontier Communications Parent, Inc. All rights reserved

20. Ethernet Private Line (Cont'd

(L) Rates and Charges* (Cont'd)

(66) Transport - Banded Optical – DS3 (Wholly Provided)(Cont'd)

Jurisdiction	One Year Monthly Rate	
North Carolina		
0 miles	$1,800.00	(D)
1 - 10 miles	2,700.00	(D)
11 - 20 miles	4,000.00	(D)
21 + miles	5,200.00	(D)
		(D)
		(D)
		(D)
		(D)
		(D)
		(D)

* These rates and charges apply to both Price Bands and N-MSA rates and charges.

© 2022 Frontier Communications Parent, Inc. All rights reserved

20. Ethernet Private Line (Cont'd

(L) Rates and Charges* (Cont'd)

(66) Transport - Banded Optical – DS3 (Wholly Provided) (Cont'd)

Jurisdiction	Three Year Monthly Rate	
North Carolina		
0 miles	$1,700.00	(D)
1 - 10 miles	2,550.00	(D)
11 - 20 miles	3,800.00	(D)
21 + miles	4,900.00	(D)
		(D)
		(D)
		(D)
		(D)
		(D)
		(D)

* These rates and charges apply to both Price Bands and N-MSA rates and charges.

© 2022 Frontier Communications Parent, Inc. All rights reserved

20. Ethernet Private Line (Cont'd

(L) Rates and Charges* (Cont'd)

(66) Transport - Banded Optical – DS3 (Wholly Provided) (Cont'd)

Jurisdiction	Five Year Monthly Rate	
North Carolina		
0 miles	$1,600.00	(D)
1 - 10 miles	2,350.00	(D)
11 – 20 miles	3,500.00	(D)
21 + miles	4,600.00	(D)
		(D)
		(D)
		(D)
		(D)
		(D)
		(D)

* These rates and charges apply to both Price Bands and N-MSA rates and charges.

© 2022 Frontier Communications Parent, Inc. All rights reserved

20. Ethernet Private Line (Cont'd

(L) Rates and Charges* (Cont'd)

(66) Transport - Banded Optical – DS3 (Wholly Provided) (Cont'd)

Jurisdiction	Seven Year Monthly Rate	
North Carolina		
0 miles	$1,500.00	(D)
1 - 10 miles	2,200.00	(D)
11 - 20 miles	3,200.00	(D)
21 + miles	4,300.00	(D)
		(D)
		(D)
		(D)
		(D)
		(D)
		(D)

* These rates and charges apply to both Price Bands and N-MSA rates and charges.

© 2022 Frontier Communications Parent, Inc. All rights reserved

20. Ethernet Private Line (Cont'd

(L) Rates and Charges** (Cont'd)

(66) Transport - Banded Optical – OC3 (Wholly Provided)

Jurisdiction	One Year Monthly Rate
Illinois	
0 miles	$3,200.00
1 - 10 miles	4,950.00
11 - 20 miles	8,380.00
21 + miles	11,750.00
Indiana	
0 miles	$3,200.00
1 - 10 miles	4,950.00
11 - 20 miles	8,500.00
21 + miles	12,000.00

** These rates and charges apply to both Price Bands and N-MSA rates and charges.

© 2022 Frontier Communications Parent, Inc. All rights reserved

20. Ethernet Private Line (Cont'd

(L) Rates and Charges** (Cont'd)

(66) Transport - Banded Optical# – OC3 (Wholly Provided) (Cont'd)

Jurisdiction	Three Year Monthly Rate
Illinois	
0 miles	$3,050.00
1 - 10 miles	4,750.00
11 - 20 miles	8,110.00
21 + miles	11,500.00
Indiana	
0 miles	$2,950.00
1 - 10 miles	4,600.00
11 - 20 miles	7,900.00
21 + miles	11,110.00

Service availability limited. Refer to # footnote on Page 20-17.

** These rates and charges apply to both Price Bands and N-MSA rates and charges.

© 2022 Frontier Communications Parent, Inc. All rights reserved

20. Ethernet Private Line (Cont'd

(L) Rates and Charges** (Cont'd)

(66) Transport - Banded Optical# – OC3 (Wholly Provided) (Cont'd)

Jurisdiction	Five Year Monthly Rate
Illinois	
0 miles	$2,900.00
1 - 10 miles	4,550.00
11 - 20 miles	7,810.00
21 + miles	11,100.00
Indiana	
0 miles	$2,850.00
1 - 10 miles	4,450.00
11 - 20 miles	7,600.00
21 + miles	10,710.00

Service availability limited. Refer to # footnote on Page 20-17.

** These rates and charges apply to both Price Bands and N-MSA rates and charges.

© 2022 Frontier Communications Parent, Inc. All rights reserved

20. Ethernet Private Line (Cont'd

(L) Rates and Charges** (Cont'd)

(66) Transport - Banded Optical# – OC3 (Wholly Provided) (Cont'd)

Jurisdiction	Seven Year Monthly Rate
Illinois	
0 miles	$2,750.00
1 - 10 miles	4,440.00
11 - 20 miles	7,510.00
21 + miles	10,700.00
Indiana	
0 miles	$2,750.00
1 - 10 miles	4,300.00
11 - 20 miles	7,300.00
21 + miles	10,310.00

Service availability limited. Refer to # footnote on Page 20-17.

** These rates and charges apply to both Price Bands and N-MSA rates and charges.

© 2022 Frontier Communications Parent, Inc. All rights reserved

20. Ethernet Private Line (Cont'd

(L) Rates and Charges* (Cont'd)

(66) Transport - Banded Optical# – OC3 (Wholly Provided) (Cont'd)

Jurisdiction	One Year Monthly Rate	
North Carolina		
0 miles	$3,200.00	(D)
1 - 10 miles	4,950.00	(D)
11 - 20 miles	8,500.00	(D)
21 + miles	12,000.00	(D)
		(D)
		(D)
		(D)
		(D)
		(D)
		(D)
		(D)
		(D)
		(D)

Service availability limited. Refer to # footnote on Page 20-17.

* These rates and charges apply to both Price Bands and N-MSA rates and charges.

© 2022 Frontier Communications Parent, Inc. All rights reserved

20. Ethernet Private Line (Cont'd

(L) Rates and Charges* (Cont'd)

(66) Transport - Banded Optical# – OC3 (Wholly Provided)(Cont'd)

Jurisdiction	Three Year Monthly Rate	
North Carolina		
0 miles	$2,950.00	(D)
1 - 10 miles	4,600.00	(D)
11 - 20 miles	7,800.00	(D)
21 + miles	10,900.00	(D)
		(D)
		(D)
		(D)
		(D)
		(D)
		(D)

Service availability limited. Refer to # footnote on Page 20-17.

* These rates and charges apply to both Price Bands and N-MSA rates and charges.

© 2022 Frontier Communications Parent, Inc. All rights reserved

20. Ethernet Private Line (Cont'd

(L) Rates and Charges* (Cont'd)

(66) Transport - Banded Optical# – OC3 (Wholly Provided) (Cont'd)

Jurisdiction	Five Year Monthly Rate	
North Carolina		
0 miles	$2,850.00	(D)
1 - 10 miles	4,450.00	(D)
11 - 20 miles	7,600.00	(D)
21 + miles	10,500.00	(D)
		(D)
		(D)
		(D)
		(D)
		(D)
		(D)
		(D)
		(D)
		(D)

Service availability limited. Refer to # footnote on Page 20-17.

* These rates and charges apply to both Price Bands and N-MSA rates and charges.

© 2022 Frontier Communications Parent, Inc. All rights reserved

20. Ethernet Private Line (Cont'd

(L) Rates and Charges* (Cont'd)

(66) Transport - Banded Optical# – OC3 (Wholly Provided) (Cont'd)

Jurisdiction	Seven Year Monthly Rate	
North Carolina		
0 miles	$2,740.00	(D)
1 - 10 miles	4,300.00	(D)
11 - 20 miles	7,400.00	(D)
21 + miles	10,200.00	(D)
		(D)
		(D)
		(D)
		(D)
		(D)
		(D)

Service availability limited. Refer to # footnote on Page 20-17.

* These rates and charges apply to both Price Bands and N-MSA rates and charges.

© 2022 Frontier Communications Parent, Inc. All rights reserved

20. Ethernet Private Line (Cont'd

(L) Rates and Charges** (Cont'd)

(66) Transport - Banded Optical# – OC3c (Wholly Provided)

Jurisdiction	One Year Monthly Rate
Illinois	
0 miles	$5,250.00
1 - 10 miles	6,100.00
11 - 20 miles	7,800.00
21 + miles	9,500.00
Indiana	
0 miles	$5,250.00
1 - 10 miles	6,100.00
11 - 20 miles	7,800.00
21 + miles	9,500.00

Service availability limited. Refer to # footnote on Page 20-17.

** These rates and charges apply to both Price Bands and N-MSA rates and charges.

© 2022 Frontier Communications Parent, Inc. All rights reserved

20. Ethernet Private Line (Cont'd

(L) Rates and Charges** (Cont'd)

(66) Transport - Banded Optical# – OC3c (Wholly Provided) (Cont'd)

Jurisdiction	Three Year Monthly Rate
Illinois	
0 miles	$4,750.00
1 - 10 miles	5,600.00
11 - 20 miles	7,300.00
21 + miles	9,000.00
Indiana	
0 miles	$4,750.00
1 - 10 miles	5,600.00
11 - 20 miles	7,300.00
21 + miles	9,000.00

Service availability limited. Refer to # footnote on Page 20-17.

** These rates and charges apply to both Price Bands and N-MSA rates and charges.

© 2022 Frontier Communications Parent, Inc. All rights reserved

20. Ethernet Private Line (Cont'd

(L) Rates and Charges** (Cont'd)

(66) Transport - Banded Optical# – OC3c (Wholly Provided) (Cont'd)

Jurisdiction	Five Year Monthly Rate
Illinois	
0 miles	$4,550.00
1 - 10 miles	5,400.00
11 - 20 miles	7,100.00
21 + miles	8,800.00
Indiana	
0 miles	$4,550.00
1 - 10 miles	5,400.00
11 - 20 miles	7,100.00
21 + miles	8,800.00

Service availability limited. Refer to # footnote on Page 20-17.

** These rates and charges apply to both Price Bands and N-MSA rates and charges.

© 2022 Frontier Communications Parent, Inc. All rights reserved

20. Ethernet Private Line (Cont'd

(L) Rates and Charges** (Cont'd)

(66) Transport - Banded Optical# – OC3c (Wholly Provided) (Cont'd)

Jurisdiction	Seven Year Monthly Rate
Illinois	
0 miles	$4,350.00
1 - 10 miles	5,200.00
11 - 20 miles	6,900.00
21 + miles	8,600.00
Indiana	
0 miles	$4,350.00
1 - 10 miles	5,200.00
11 - 20 miles	6,900.00
21 + miles	8,600.00

Service availability limited. Refer to # footnote on Page 20-17.

** These rates and charges apply to both Price Bands and N-MSA rates and charges.

© 2022 Frontier Communications Parent, Inc. All rights reserved

20. Ethernet Private Line (Cont'd

(L) Rates and Charges* (Cont'd)

(66) Transport - Banded Optical# – OC3c (Wholly Provided) (Cont'd)

Jurisdiction	One Year Monthly Rate	
North Carolina		
0 miles	$5,250.00	(D)
1 - 10 miles	6,100.00	(D)
11 - 20 miles	7,800.00	(D)
21 + miles	9,500.00	(D)
		(D)
		(D)
		(D)
		(D)
		(D)
		(D)

Service availability limited. Refer to # footnote on Page 20-17.

* These rates and charges apply to both Price Bands and N-MSA rates and charges.

© 2022 Frontier Communications Parent, Inc. All rights reserved

20. Ethernet Private Line (Cont'd

(L) Rates and Charges* (Cont'd)

(66) Transport - Banded Optical# – OC3c (Wholly Provided) (Cont'd)

Jurisdiction	Three Year Monthly Rate	
North Carolina		
0 miles	$4,750.00	(D)
1 - 10 miles	5,600.00	(D)
11 - 20 miles	7,300.00	(D)
21 + miles	9,000.00	(D)
		(D)
		(D)
		(D)
		(D)
		(D)
		(D)

Service availability limited. Refer to # footnote on Page 20-17.

* These rates and charges apply to both Price Bands and N-MSA rates and charges.

© 2022 Frontier Communications Parent, Inc. All rights reserved

20. Ethernet Private Line (Cont'd

(L) Rates and Charges* (Cont'd)

(66) Transport - Banded Optical# – OC3c (Wholly Provided) (Cont'd)

Jurisdiction	Five Year Monthly Rate	
North Carolina		
0 miles	$4,550.00	(D)
1 - 10 miles	5,400.00	(D)
11 - 20 miles	7,100.00	(D)
21 + miles	8,800.00	(D)
		(D)
		(D)
		(D)
		(D)
		(D)
		(D)

Service availability limited. Refer to # footnote on Page 20-17.

* These rates and charges apply to both Price Bands and N-MSA rates and charges.

© 2022 Frontier Communications Parent, Inc. All rights reserved

20. Ethernet Private Line (Cont'd

(L) Rates and Charges* (Cont'd)

(66) Transport - Banded Optical# – OC3c (Wholly Provided) (Cont'd)

Jurisdiction	Seven Year Monthly Rate	
North Carolina		
0 miles	$4,350.00	(D)
1 - 10 miles	5,200.00	(D)
11 - 20 miles	6,900.00	(D)
21 + miles	8,600.00	(D)
		(D)
		(D)
		(D)
		(D)
		(D)

Service availability limited. Refer to # footnote on Page 20-17.

* These rates and charges apply to both Price Bands and N-MSA rates and charges.

© 2022 Frontier Communications Parent, Inc. All rights reserved

20. Ethernet Private Line (Cont'd

(L) Rates and Charges** (Cont'd)

(66) Transport - Banded Optical# – OC12 (Wholly Provided)

Jurisdiction	One Year Monthly Rate
Illinois	
0 miles	$5,250.00
1 - 10 miles	8,000.00
11 - 20 miles	13,000.00
21 + miles	18,500.00
Indiana	
0 miles	$5,250.00
1 - 10 miles	8,000.00
11 - 20 miles	13,000.00
21 + miles	18,500.00

Service availability limited. Refer to # footnote on Page 20-17.

** These rates and charges apply to both Price Bands and N-MSA rates and charges.

© 2022 Frontier Communications Parent, Inc. All rights reserved.

20. Ethernet Private Line (Cont'd

(L) Rates and Charges** (Cont'd)

(66) Transport - Banded Optical# – OC12 (Wholly Provided) (Cont'd)

Jurisdiction	Three Year Monthly Rate
Illinois	
0 miles	$5,000.00
1 - 10 miles	7,583.00
11 - 20 miles	12,583.00
21 + miles	17,583.00
Indiana	
0 miles	$5,000.00
1 - 10 miles	7,583.00
11 - 20 miles	12,583.00
21 + miles	17,583.00

Service availability limited. Refer to # footnote on Page 20-17.

** These rates and charges apply to both Price Bands and N-MSA rates and charges.

© 2022 Frontier Communications Parent, Inc. All rights reserved.

20. Ethernet Private Line (Cont'd

(L) Rates and Charges** (Cont'd)

(66) Transport - Banded Optical# – OC12 (Wholly Provided) (Cont'd)

Jurisdiction	Five Year Monthly Rate
Illinois	
0 miles	$4,767.00
1 - 10 miles	7,217.00
11 - 20 miles	12,117.00
21 + miles	17,017.00
Indiana	
0 miles	$4,767.00
1 - 10 miles	7,217.00
11 - 20 miles	12,117.00
21 + miles	17,017.00

Service availability limited. Refer to # footnote on Page 20-17.

** These rates and charges apply to both Price Bands and N-MSA rates and charges.

© 2022 Frontier Communications Parent, Inc. All rights reserved.

20. Ethernet Private Line (Cont'd

(L) Rates and Charges** (Cont'd)

(66) Transport - Banded Optical# – OC12 (Wholly Provided) (Cont'd)

Jurisdiction	Seven Year Monthly Rate
Illinois	
0 miles	$4,450.00
1 - 10 miles	6,850.00
11 - 20 miles	11,650.00
21 + miles	16,450.00
Indiana	
0 miles	$4,450.00
1 - 10 miles	6,850.00
11 - 20 miles	11,650.00
21 + miles	16,450.00

Service availability limited. Refer to # footnote on Page 20-17.

** These rates and charges apply to both Price Bands and N-MSA rates and charges.

© 2022 Frontier Communications Parent, Inc. All rights reserved.

20. Ethernet Private Line (Cont'd

(L) Rates and Charges* (Cont'd)

(66) Transport - Banded Optical# – OC12 (Wholly Provided) (Cont'd)

Jurisdiction	One Year Monthly Rate	
North Carolina		
0 miles	$5,250.00	(D)
1 - 10 miles	8,000.00	(D)
11 - 20 miles	13,000.00	(D)
21 + miles	18,500.00	(D)
		(D)
		(D)
		(D)
		(D)
		(D)
		(D)

Service availability limited. Refer to # footnote on Page 20-17.

* These rates and charges apply to both Price Bands and N-MSA rates and charges.

© 2022 Frontier Communications Parent, Inc. All rights reserved

20. Ethernet Private Line (Cont'd

(L) Rates and Charges* (Cont'd)

(66) Transport - Banded Optical# – OC12 (Wholly Provided) (Cont'd)

Jurisdiction	Three Year Monthly Rate	
North Carolina		
0 miles	$5,000.00	(D)
1 - 10 miles	7,583.00	(D)
11 - 20 miles	12,583.00	(D)
21 + miles	17,583.00	(D)
		(D)
		(D)
		(D)
		(D)
		(D)
		(D)

Service availability limited. Refer to # footnote on Page 20-17.

* These rates and charges apply to both Price Bands and N-MSA rates and charges.

© 2022 Frontier Communications Parent, Inc. All rights reserved

20. Ethernet Private Line (Cont'd

(L) Rates and Charges* (Cont'd)

(66) Transport - Banded Optical# – OC12 (Wholly Provided) (Cont'd)

Jurisdiction	Five Year Monthly Rate	
North Carolina		
0 miles	$4,767.00	(D)
1 - 10 miles	7,217.00	(D)
11 - 20 miles	12,117.00	(D)
21 + miles	17,017.00	(D)
		(D)
		(D)
		(D)
		(D)
		(D)
		(D)

Service availability limited. Refer to # footnote on Page 20-17.

* These rates and charges apply to both Price Bands and N-MSA rates and charges.

© 2022 Frontier Communications Parent, Inc. All rights reserved

20. Ethernet Private Line (Cont'd

(L) Rates and Charges* (Cont'd)

(66) Transport - Banded Optical# – OC12 (Wholly Provided) (Cont'd)

Jurisdiction	Seven Year Monthly Rate	
North Carolina		
0 miles	$4,450.00	(D)
1 - 10 miles	6,850.00	(D)
11 - 20 miles	11,650.00	(D)
21 + miles	16,450.00	(D)
		(D)
		(D)
		(D)
		(D)
		(D)
		(D)

Service availability limited. Refer to # footnote on Page 20-17.

* These rates and charges apply to both Price Bands and N-MSA rates and charges.

© 2022 Frontier Communications Parent, Inc. All rights reserved

20. Ethernet Private Line (Cont'd

(L) Rates and Charges** (Cont'd)

(66) Transport - Banded Optical# – OC12c (Wholly Provided)

Jurisdiction	One Year Monthly Rate
Illinois	
0 miles	$10,700.00
1 - 10 miles	11,900.00
11 - 20 miles	14,300.00
21 + miles	16,700.00
Indiana	
0 miles	$10,700.00
1 - 10 miles	11,900.00
11 - 20 miles	14,300.00
21 + miles	16,700.00

Service availability limited. Refer to # footnote on Page 20-11.

** These rates and charges apply to both Price Bands and N-MSA rates and charges.

© 2022 Frontier Communications Parent, Inc. All rights reserved.

20. Ethernet Private Line (Cont'd

(L) Rates and Charges** (Cont'd)

(66) Transport - Banded Optical# – OC12c (Wholly Provided) (Cont'd)

Jurisdiction	Three Year Monthly Rate
Illinois	
0 miles	$10,100.00
1 - 10 miles	11,300.00
11 - 20 miles	13,700.00
21 + miles	16,100.00
Indiana	
0 miles	$10,100.00
1 - 10 miles	11,300.00
11 - 20 miles	13,700.00
21 + miles	16,100.00

Service availability limited. Refer to # footnote on Page 20-17.

** These rates and charges apply to both Price Bands and N-MSA rates and charges.

© 2022 Frontier Communications Parent, Inc. All rights reserved.

20. Ethernet Private Line (Cont'd

(L) Rates and Charges** (Cont'd)

(66) Transport - Banded Optical# – OC12c (Wholly Provided) (Cont'd)

Jurisdiction	Five Year Monthly Rate
Illinois	
0 miles	$9,500.00
1 - 10 miles	10,700.00
11 - 20 miles	13,100.00
21 + miles	15,500.00
Indiana	
0 miles	$9,500.00
1 - 10 miles	10,700.00
11 - 20 miles	13,100.00
21 + miles	15,500.00

Service availability limited. Refer to # footnote on Page 20-17.

** These rates and charges apply to both Price Bands and N-MSA rates and charges.

© 2022 Frontier Communications Parent, Inc. All rights reserved.

20. Ethernet Private Line (Cont'd

(L) Rates and Charges** (Cont'd)

(66) Transport - Banded Optical# – OC12c (Wholly Provided) (Cont'd)

Jurisdiction	Seven Year Monthly Rate
Illinois	
0 miles	$9,000.00
1 - 10 miles	10,200.00
11 - 20 miles	12,600.00
21 + miles	15,000.00
Indiana	
0 miles	$9,000.00
1 - 10 miles	10,200.00
11 - 20 miles	12,600.00
21 + miles	15,000.00

Service availability limited. Refer to # footnote on Page 20-17.

** These rates and charges apply to both Price Bands and N-MSA rates and charges.

© 2022 Frontier Communications Parent, Inc. All rights reserved.

20. Ethernet Private Line (Cont'd

(L) Rates and Charges* (Cont'd)

(66) Transport - Banded Optical# – OC12c (Wholly Provided) (Cont'd)

Jurisdiction	One Year Monthly Rate	
North Carolina		
0 miles	$10,700.00	(D)
1 - 10 miles	11,900.00	(D)
11 - 20 miles	14,300.00	(D)
21 + miles	16,700.00	(D)
		(D)
		(D)
		(D)
		(D)
		(D)

Service availability limited. Refer to # footnote on Page 20-17.

* These rates and charges apply to both Price Bands and N-MSA rates and charges.

© 2022 Frontier Communications Parent, Inc. All rights reserved

20. Ethernet Private Line (Cont'd

(L) Rates and Charges* (Cont'd)

(66) Transport - Banded Optical# – OC12c (Wholly Provided) (Cont'd)

Jurisdiction	Three Year Monthly Rate	
North Carolina		
0 miles	$10,100.00	(D)
1 - 10 miles	11,300.00	(D)
11 - 20 miles	13,700.00	(D)
21 + miles	16,100.00	(D)
		(D)
		(D)
		(D)
		(D)
		(D)
		(D)

Service availability limited. Refer to # footnote on Page 20-17.

* These rates and charges apply to both Price Bands and N-MSA rates and charges.

© 2022 Frontier Communications Parent, Inc. All rights reserved

20. Ethernet Private Line (Cont'd

(L) Rates and Charges* (Cont'd)

(66) Transport - Banded Optical# – OC12c (Wholly Provided) (Cont'd)

Jurisdiction	Five Year Monthly Rate	
North Carolina		
0 miles	$9,500.00	(D)
1 - 10 miles	10,700.00	(D)
11 - 20 miles	13,100.00	(D)
21 + miles	15,500.00	(D)
		(D)
		(D)
		(D)
		(D)
		(D)
		(D)

Service availability limited. Refer to # footnote on Page 20-17.

* These rates and charges apply to both Price Bands and N-MSA rates and charges.

© 2022 Frontier Communications Parent, Inc. All rights reserved

20. Ethernet Private Line (Cont'd

(L) Rates and Charges* (Cont'd)

(66) Transport - Banded Optical# – OC12c (Wholly Provided) (Cont'd)

Jurisdiction	Seven Year Monthly Rate	
North Carolina		
0 miles	$9,000.00	(D)
1 - 10 miles	10,200.00	(D)
11 - 20 miles	12,600.00	(D)
21 + miles	15,000.00	(D)
		(D)
		(D)
		(D)
		(D)
		(D)
		(D)

Service availability limited. Refer to # footnote on Page 20-17.

* These rates and charges apply to both Price Bands and N-MSA rates and charges.

© 2022 Frontier Communications Parent, Inc. All rights reserved

20. Ethernet Private Line (Cont'd

(L) Rates and Charges** (Cont'd)

(66) Transport - Banded Optical – STS1 (Wholly Provided)

Jurisdiction	One Year Monthly Rate
Illinois	
0 miles	$1,800.00
1 - 10 miles	2,700.00
11 - 20 miles	4,000.00
21 + miles	5,200.00
Indiana	
0 miles	$1,800.00
1 - 10 miles	2,600.00
11 - 20 miles	4,000.00
21 + miles	5,200.00

** These rates and charges apply to both Price Bands and N-MSA rates and charges.

© 2022 Frontier Communications Parent, Inc. All rights reserved

20. Ethernet Private Line (Cont'd

(L) Rates and Charges** (Cont'd)

(66) Transport - Banded Optical – STS1 (Wholly Provided) (Cont'd)

Jurisdiction	Three Year Monthly Rate
Illinois	
0 miles	$1,700.00
1 - 10 miles	2,550.00
11 - 20 miles	3,800.00
21 + miles	4,900.00
Indiana	
0 miles	$1,700.00
1 - 10 miles	2,550.00
11 - 20 miles	3,800.00
21 + miles	4,900.00

** These rates and charges apply to both Price Bands and N-MSA rates and charges.

© 2022 Frontier Communications Parent, Inc. All rights reserved

20. Ethernet Private Line (Cont'd

(L) Rates and Charges** (Cont'd)

(66) Transport - Banded Optical – STS1 (Wholly Provided) (Cont'd)

Jurisdiction	Five Year Monthly Rate
Illinois	
0 miles	$1,600.00
1 - 10 miles	2,350.00
11 - 20 miles	3,500.00
21 + miles	4,600.00
Indiana	
0 miles	$1,600.00
1 - 10 miles	2,350.00
11 - 20 miles	3,500.00
21 + miles	4,600.00

** These rates and charges apply to both Price Bands and N-MSA rates and charges.

© 2022 Frontier Communications Parent, Inc. All rights reserved

20. Ethernet Private Line (Cont'd

(L) Rates and Charges** (Cont'd)

(66) Transport - Banded Optical – STS1 (Wholly Provided) (Cont'd)

Jurisdiction	Seven Year Monthly Rate
Illinois	
0 miles	$1,500.00
1 - 10 miles	2,200.00
11 - 20 miles	3,200.00
21 + miles	4,300.00
Indiana	
0 miles	$1,500.00
1 - 10 miles	2,200.00
11 - 20 miles	3,200.00
21 + miles	4,300.00

** These rates and charges apply to both Price Bands and N-MSA rates and charges.

© 2022 Frontier Communications Parent, Inc. All rights reserved

20. Ethernet Private Line (Cont'd

(L) Rates and Charges* (Cont'd)

(66) Transport - Banded Optical – STS1 (Wholly Provided) (Cont'd)

Jurisdiction	One Year Monthly Rate	
North Carolina		
0 miles	$1,800.00	(D)
1 - 10 miles	2,700.00	(D)
11 - 20 miles	4,000.00	(D)
21 + miles	5,200.00	(D)
		(D)
		(D)
		(D)
		(D)
		(D)

* These rates and charges apply to both Price Bands and N-MSA rates and charges.

© 2022 Frontier Communications Parent, Inc. All rights reserved

20. Ethernet Private Line (Cont'd

(L) Rates and Charges* (Cont'd)

(66) Transport - Banded Optical – STS1 (Wholly Provided) (Cont'd)

Jurisdiction	Three Year Monthly Rate	
North Carolina		
0 miles	$1,700.00	(D)
1 - 10 miles	2,550.00	(D)
11 - 20 miles	3,800.00	(D)
21 + miles	4,900.00	(D)
		(D)
		(D)
		(D)
		(D)
		(D)
		(D)
		(D)
		(D)
		(D)
		(D)

* These rates and charges apply to both Price Bands and N-MSA rates and charges.

© 2022 Frontier Communications Parent, Inc. All rights reserved

20. Ethernet Private Line (Cont'd

(L) Rates and Charges* (Cont'd)

(66) Transport - Banded Optical – STS1 (Wholly Provided) (Cont'd)

Jurisdiction	Five Year Monthly Rate	
North Carolina		
0 miles	$1,600.00	(D)
1 - 10 miles	2,350.00	(D)
11 - 20 miles	3,500.00	(D)
21 + miles	4,600.00	(D)
		(D)
		(D)
		(D)
		(D)
		(D)

* These rates and charges apply to both Price Bands and N-MSA rates and charges.

© 2022 Frontier Communications Parent, Inc. All rights reserved

20. Ethernet Private Line (Cont'd

(L) Rates and Charges* (Cont'd)

(66) Transport - Banded Optical – STS1 (Wholly Provided) (Cont'd)

Jurisdiction	Seven Year Monthly Rate	
North Carolina		
0 miles	$1,500.00	(D)
1 - 10 miles	2,200.00	(D)
11 - 20 miles	3,200.00	(D)
21 + miles	4,300.00	(D)
		(D)
		(D)
		(D)
		(D)
		(D)

* These rates and charges apply to both Price Bands and N-MSA rates and charges.

© 2022 Frontier Communications Parent, Inc. All rights reserved

20. Ethernet Private Line (Cont'd

(L) Rates and Charges** (Cont'd)

(66) Transport - Banded Optical# – OC48 (Wholly Provided)

Jurisdiction	One Year Monthly Rate
Illinois	
0 miles	$7,365.00
1 - 10 miles	10,600.00
11 - 20 miles	17,070.00
21 + miles	23,545.00
Indiana	
0 miles	$7,365.00
1 - 10 miles	10,600.00
11 - 20 miles	17,070.00
21 + miles	23,545.00

Service availability limited. Refer to # footnote on Page 20-17.

** These rates and charges apply to both Price Bands and N-MSA rates and charges.

© 2022 Frontier Communications Parent, Inc. All rights reserved

20. Ethernet Private Line (Cont'd

(L) Rates and Charges** (Cont'd)

(66) Transport - Banded Optical# – OC48 (Wholly Provided)

Jurisdiction	Three Year Monthly Rate
.00	
Illinois	
0 miles	$7,200.00
1 - 10 miles	10,200.00
11 - 20 miles	16,800.00
21 + miles	23,200.00
Indiana	
0 miles	$7,200.00
1 - 10 miles	10,200.00
11 - 20 miles	16,800.00
21 + miles	23,200.00

Service availability limited. Refer to # footnote on Page 20-17.

** These rates and charges apply to both Price Bands and N-MSA rates and charges.

© 2022 Frontier Communications Parent, Inc. All rights reserved

20. Ethernet Private Line (Cont'd

(L) Rates and Charges** (Cont'd)

(66) Transport - Banded Optical# – OC48 (Wholly Provided)

Jurisdiction	Five Year Monthly Rate
Illinois	
0 miles	$7,100.00
1 - 10 miles	10,000.00
11 - 20 miles	16,500.00
21 + miles	23,000.00
Indiana	
0 miles	$7,100.00
1 - 10 miles	10,000.00
11 - 20 miles	16,500.00
21 + miles	23,000.00

Service availability limited. Refer to # footnote on Page 20-17.

** These rates and charges apply to both Price Bands and N-MSA rates and charges.

© 2022 Frontier Communications Parent, Inc. All rights reserved

20. Ethernet Private Line (Cont'd

(L) Rates and Charges** (Cont'd)

(66) Transport - Banded Optical# – OC48 (Wholly Provided)

Jurisdiction	Seven Year Monthly Rate
Illinois	
0 miles	$7,000.00
1 - 10 miles	9,800.00
11 - 20 miles	16,200.00
21 + miles	22,800.00
Indiana	
0 miles	$7,000.00
1 - 10 miles	9,800.00
11 - 20 miles	16,200.00
21 + miles	22,800.00

Service availability limited. Refer to # footnote on Page 20-17.

** These rates and charges apply to both Price Bands and N-MSA rates and charges.

© 2022 Frontier Communications Parent, Inc. All rights reserved

20. Ethernet Private Line (Cont'd

(L) Rates and Charges* (Cont'd)

(66) Transport - Banded Optical# – OC48 (Wholly Provided)

Jurisdiction	One Year Monthly Rate	
North Carolina		
0 miles	$7,365.00	(D)
1 - 10 miles	10,600.00	(D)
11 - 20 miles	17,070.00	(D)
21 + miles	23,545.00	(D)
		(D)
		(D)
		(D)
		(D)
		(D)
		(D)

Service availability limited. Refer to # footnote on Page 20-17.

* These rates and charges apply to both Price Bands and N-MSA rates and charges.

© 2022 Frontier Communications Parent, Inc. All rights reserved

20. Ethernet Private Line (Cont'd

(L) Rates and Charges* (Cont'd)

(66) Transport - Banded Optical# – OC48 (Wholly Provided)

Jurisdiction	Three Year Monthly Rate	
North Carolina		
0 miles	$7,200.00	(D)
1 - 10 miles	10,200.00	(D)
11 - 20 miles	16,800.00	(D)
21 + miles	23,200.00	(D)
		(D)

(D)
(D)
(D)
(D)
(D)

Service availability limited. Refer to # footnote on Page 20-17.

* These rates and charges apply to both Price Bands and N-MSA rates and charges.

© 2022 Frontier Communications Parent, Inc. All rights reserved

20. Ethernet Private Line (Cont'd

(L) Rates and Charges* (Cont'd)

(66) Transport - Banded Optical# – OC48 (Wholly Provided)

Jurisdiction	Five Year Monthly Rate	
North Carolina		
0 miles	$7,100.00	(D)
1 - 10 miles	10,000.00	(D)
11 - 20 miles	16,500.00	(D)
21 + miles	23,000.00	(D)
		(D)
		(D)
		(D)
		(D)
		(D)
		(D)

Service availability limited. Refer to # footnote on Page 20-17.

* These rates and charges apply to both Price Bands and N-MSA rates and charges.

© 2022 Frontier Communications Parent, Inc. All rights reserved

20. Ethernet Private Line (Cont'd

(L) Rates and Charges* (Cont'd)

(66) Transport - Banded Optical# – OC48 (Wholly Provided)

Jurisdiction	Seven Year Monthly Rate	
North Carolina		
0 miles	$7,000.00	(D)
1 - 10 miles	9,800.00	(D)
11 - 20 miles	16,200.00	(D)
21 + miles	22,800.00	(D)
		(D)
		(D)
		(D)
		(D)
		(D)
		(D)
		(D)
		(D)
		(D)

Service availability limited. Refer to # footnote on Page 20-17.

* These rates and charges apply to both Price Bands and N-MSA rates and charges.

© 2022 Frontier Communications Parent, Inc. All rights reserved

20. Ethernet Private Line (Cont'd

(L) Rates and Charges** (Cont'd)

(66) Transport - Banded Optical# – OC48c (Wholly Provided)

Jurisdiction	One Year Monthly Rate
Illinois	
0 miles	$10,750.00
1 - 10 miles	20,350.00
11 - 20 miles	29,370.00
21 + miles	38,390.00
Indiana	
0 miles	$10,750.00
1 - 10 miles	20,350.00
11 - 20 miles	29,370.00
21 + miles	38,390.00

Service availability limited. Refer to # footnote on Page 20-17.

** These rates and charges apply to both Price Bands and N-MSA rates and charges.

© 2022 Frontier Communications Parent, Inc. All rights reserved

20. Ethernet Private Line (Cont'd

(L) Rates and Charges** (Cont'd)

(66) Transport - Banded Optical# – OC48c (Wholly Provided)

Jurisdiction	Three Year Monthly Rate
Illinois	
0 miles	$10,500.00
1 - 10 miles	20,100.00
11 - 20 miles	29,100.00
21 + miles	38,100.00
Indiana	
0 miles	$10,500.00
1 - 10 miles	20,100.00
11 - 20 miles	29,100.00
21 + miles	38,100.00

Service availability limited. Refer to # footnote on Page 20-17.

** These rates and charges apply to both Price Bands and N-MSA rates and charges.

© 2022 Frontier Communications Parent, Inc. All rights reserved

20. Ethernet Private Line (Cont'd

(L) Rates and Charges** (Cont'd)

(66) Transport - Banded Optical# – OC48c (Wholly Provided)

Jurisdiction	Five Year Monthly Rate
Illinois	
0 miles	$10,250.00
1 - 10 miles	19,900.00
11 - 20 miles	28,900.00
21 + miles	37,900.00
Indiana	
0 miles	$10,250.00
1 - 10 miles	19,900.00
11 – 20 miles	28,900.00
21 + miles	37,900.00

Service availability limited. Refer to # footnote on Page 20-17.

** These rates and charges apply to both Price Bands and N-MSA rates and charges.

© 2022 Frontier Communications Parent, Inc. All rights reserved

20. Ethernet Private Line (Cont'd

(L) Rates and Charges** (Cont'd)

(66) Transport - Banded Optical# – OC48c (Wholly Provided)

Jurisdiction	Seven Year Monthly Rate
Illinois	
0 miles	$10,000.00
1 - 10 miles	19,600.00
11 - 20 miles	28,600.00
21 + miles	37,600.00
Indiana	
0 miles	$10,000.00
1 - 10 miles	19,600.00
11 - 20 miles	28,600.00
21 + miles	37,600.00

Service availability limited. Refer to # footnote on Page 20-17.

** These rates and charges apply to both Price Bands and N-MSA rates and charges.

© 2022 Frontier Communications Parent, Inc. All rights reserved

20. Ethernet Private Line (Cont'd

(L) Rates and Charges* (Cont'd)

(66) Transport - Banded Optical# – OC48c (Wholly Provided)

Jurisdiction	One Year Monthly Rate	
North Carolina		
0 miles	$10,750.00	(D)
1 - 10 miles	20,350.00	(D)
11 - 20 miles	29,370.00	(D)
21 + miles	38,390.00	(D)
		(D)
		(D)
		(D)
		(D)
		(D)
		(D)

Service availability limited. Refer to # footnote on Page 20-17.

* These rates and charges apply to both Price Bands and N-MSA rates and charges.

(1.)

© 2022 Frontier Communications Parent, Inc. All rights reserved

20. Ethernet Private Line (Cont'd

(L) Rates and Charges** (Cont'd)

(66) Transport - Banded Optical# – OC48c (Wholly Provided)

Jurisdiction	Three Year Monthly Rate	
North Carolina		
0 miles	$10,500.00	(D)
1 - 10 miles	20,100.00	(D)
11 - 20 miles	29,100.00	(D)
21 + miles	38,100.00	(D)
		(D)
		(D)
		(D)
		(D)
		(D)
		(D)

Service availability limited. Refer to # footnote on Page 20-17.

** These rates and charges apply to both Price Bands and N-MSA rates and charges.

© 2022 Frontier Communications Parent, Inc. All rights reserved

20. Ethernet Private Line (Cont'd

(L) Rates and Charges* (Cont'd)

(66) Transport - Banded Optical# – OC48c (Wholly Provided)

Jurisdiction	Five Year Monthly Rate	
North Carolina		
0 miles	$10,250.00	(D)
1 - 10 miles	19,900.00	(D)
11 - 20 miles	28,900.00	(D)
21 + miles	37,900.00	(D)
		(D)
		(D)
		(D)
		(D)
		(D)
		(D)

Service availability limited. Refer to # footnote on Page 20-17.

* These rates and charges apply to both Price Bands and N-MSA rates and charges.

© 2022 Frontier Communications Parent, Inc. All rights reserved

20. Ethernet Private Line (Cont'd

(L) Rates and Charges* (Cont'd)

(66) Transport - Banded Optical# – OC48c (Wholly Provided)

Jurisdiction	Seven Year Monthly Rate	
North Carolina		
0 miles	$10,000.00	(D)
1 - 10 miles	19,600.00	(D)
11 - 20 miles	28,600.00	(D)
21 + miles	37,600.00	(D)
		(D)
		(D)
		(D)
		(D)
		(D)
		(D)

Service availability limited. Refer to # footnote on Page 20-17.

* These rates and charges apply to both Price Bands and N-MSA rates and charges.

© 2022 Frontier Communications Parent, Inc. All rights reserved

20. Ethernet Private Line (Cont'd

(L) Rates and Charges** (Cont'd)

(67) Transport - Banded Optical - DS0 (Jointly Provided) (Cont'd)

Jurisdiction	One Year Monthly Rate
Illinois	
1 - 10 miles	9.25
11 - 20 miles	10.75
21 + miles	13.50
Indiana	
1 - 10 miles	9.80
11 - 20 miles	11.50
21 + miles	14.50

** These rates and charges apply to both Price Bands and N-MSA rates and charges.

© 2022 Frontier Communications Parent, Inc. All rights reserved

20. Ethernet Private Line (Cont'd

(L) Rates and Charges** (Cont'd)

(67) Transport - Banded Optical - DS0 (Jointly Provided) (Cont'd)

Jurisdiction	Three Year Monthly Rate
Illinois	
1 - 10 miles	$ 8.25
11 - 20 miles	9.75
21 + miles	12.50
Indiana	
1 - 10 miles	$ 8.80
11 - 20 miles	10.50
21 + miles	13.50

** These rates and charges apply to both Price Bands and N-MSA rates and charges.

© 2022 Frontier Communications Parent, Inc. All rights reserved

20. Ethernet Private Line (Cont'd

(L) Rates and Charges** (Cont'd)

(67) Transport - Banded Optical - DS0 (Jointly Provided) (Cont'd)

Jurisdiction	Five Year Monthly Rate
Illinois	
1 - 10 miles	$ 8.00
11 - 20 miles	9.50
21 + miles	12.00
Indiana	
1 - 10 miles	$ 8.50
11 - 20 miles	10.00
21 + miles	13.00

** These rates and charges apply to both Price Bands and N-MSA rates and charges.

© 2022 Frontier Communications Parent, Inc. All rights reserved

20. Ethernet Private Line (Cont'd

(L) Rates and Charges** (Cont'd)

(67) Transport - Banded Optical - DS0 (Jointly Provided) (Cont'd)

Jurisdiction	Seven Year Monthly Rate
Illinois	
1 - 10 miles	$ 7.75
11 - 20 miles	9.25
21 + miles	11.50
Indiana	
1 - 10 miles	$ 8.25
11 - 20 miles	9.50
21 + miles	12.50

** These rates and charges apply to both Price Bands and N-MSA rates and charges.

© 2022 Frontier Communications Parent, Inc. All rights reserved

20. Ethernet Private Line (Cont'd

(L) Rates and Charges* (Cont'd)

(67) Transport - Banded Optical - DS0 (Jointly Provided) (Cont'd)

Jurisdiction	One Year Monthly Rate	
North Carolina		
1 - 10 miles	$9.90	(D)
11 - 20 miles	11.50	(D)
21 + miles	14.50	(D)
		(D)
		(D)
		(D)
		(D)
		(D)

* These rates and charges apply to both Price Bands and N-MSA rates and charges.

© 2022 Frontier Communications Parent, Inc. All rights reserved

20. Ethernet Private Line (Cont'd

(L) Rates and Charges* (Cont'd)

(67) Transport - Banded Optical - DS0 (Jointly Provided) (Cont'd)

Jurisdiction	Three Year Monthly Rate	
North Carolina		
1 - 10 miles	$ 8.90	(D)
11 - 20 miles	10.50	(D)
21 + miles	13.50	(D)
		(D)
		(D)
		(D)
		(D)
		(D)

* These rates and charges apply to both Price Bands and N-MSA rates and charges.

© 2022 Frontier Communications Parent, Inc. All rights reserved

20. Ethernet Private Line (Cont'd

(L) Rates and Charges* (Cont'd)

(67) Transport - Banded Optical - DS0 (Jointly Provided) (Cont'd)

Jurisdiction	Five Year Monthly Rate	
North Carolina		
1 - 10 miles	$ 8.65	(D)
11 - 20 miles	10.25	(D)
21 + miles	13.00	(D)
		(D)
		(D)
		(D)
		(D)
		(D)

* These rates and charges apply to both Price Bands and N-MSA rates and charges.

© 2022 Frontier Communications Parent, Inc. All rights reserved

20. Ethernet Private Line (Cont'd

(L) Rates and Charges* (Cont'd)

(67) Transport - Banded Optical - DS0 (Jointly Provided) (Cont'd)

Jurisdiction	Seven Year Monthly Rate	
North Carolina		
1 - 10 miles	$ 8.40	(D)
11 - 20 miles	10.00	(D)
21 + miles	12.50	(D)
		(D)
		(D)
		(D)
		(D)
		(D)

* These rates and charges apply to both Price Bands and N-MSA rates and charges.

© 2022 Frontier Communications Parent, Inc. All rights reserved

20. Ethernet Private Line (Cont'd

(L) Rates and Charges** (Cont'd)

(67) Transport - Banded Optical – DS1 (Jointly Provided) (Cont'd)

Jurisdiction	One Year Monthly Rate
Illinois	
1 - 10 miles	$78.00
11 - 20 miles	115.00
21 + miles	150.00
Indiana	
1 - 10 miles	$75.00
11 - 20 miles	110.00
21 + miles	150.00

** These rates and charges apply to both Price Bands and N-MSA rates and charges.

© 2022 Frontier Communications Parent, Inc. All rights reserved

20. Ethernet Private Line (Cont'd

(L) Rates and Charges** (Cont'd)

(67) Transport - Banded Optical – DS1 (Jointly Provided) (Cont'd)

Jurisdiction	Three Year Monthly Rate
Illinois	
1 - 10 miles	$ 72.00
11 - 20 miles	107.00
21 + miles	143.00
Indiana	
1 - 10 miles	$ 72.00
11 - 20 miles	105.00
21 + miles	136.00

** These rates and charges apply to both Price Bands and N-MSA rates and charges.

© 2022 Frontier Communications Parent, Inc. All rights reserved

20. Ethernet Private Line (Cont'd

(L) Rates and Charges** (Cont'd)

(67) Transport - Banded Optical – DS1 (Jointly Provided) (Cont'd)

Jurisdiction	Five Year Monthly Rate
Illinois	
1 – 10 miles	$68.00
11 – 20 miles	101.00
21 + miles	135.00
Indiana	
1 – 10 miles	$68.00
11 – 20 miles	101.00
21 + miles	127.00

** These rates and charges apply to both Price Bands and N-MSA rates and charges.

© 2022 Frontier Communications Parent, Inc. All rights reserved

20. Ethernet Private Line (Cont'd

(L) Rates and Charges** (Cont'd)

(67) Transport - Banded Optical – DS1 (Jointly Provided) (Cont'd)

Jurisdiction	Seven Year Monthly Rate
Illinois	
1 - 10 miles	$ 64.00
11 - 20 miles	94.00
21 + miles	126.00
Indiana	
1 - 10 miles	$ 64.00
11 - 20 miles	94.00
21 + miles	120.00

** These rates and charges apply to both Price Bands and N-MSA rates and charges.

© 2022 Frontier Communications Parent, Inc. All rights reserved

20. Ethernet Private Line (Cont'd

(L) Rates and Charges* (Cont'd)

(67) Transport - Banded Optical – DS1 (Jointly Provided) (Cont'd)

Jurisdiction	One Year Monthly Rate	
North Carolina		
1 - 10 miles	$78.00	(D)
11 - 20 miles	110.00	(D)
21 + miles	150.00	(D)
		(D)
		(D)
		(D)
		(D)
		(D)

* These rates and charges apply to both Price Bands and N-MSA rates and charges.

© 2022 Frontier Communications Parent, Inc. All rights reserved

20. Ethernet Private Line (Cont'd

(L) Rates and Charges** (Cont'd)

(67) Transport - Banded Optical – DS1 (Jointly Provided) (Cont'd)

Jurisdiction	Three Year Monthly Rate	
North Carolina		
1 - 10 miles	$ 72.00	(D)
11 - 20 miles	107.00	(D)
21 + miles	143.00	(D)
		(D)
		(D)
		(D)
		(D)
		(D)

* Rates are Intraisland only - interisland transport will be rated from Section 5.

** These rates and charges apply to both Price Bands and N-MSA rates and charges.

© 2022 Frontier Communications Parent, Inc. All rights reserved

20. Ethernet Private Line (Cont'd

(L) Rates and Charges* (Cont'd)

(67) Transport - Banded Optical – DS1 (Jointly Provided) (Cont'd)

Jurisdiction	Five Year Monthly Rate	
North Carolina		
1 - 10 miles	$ 68.00	(D)
11 - 20 miles	101.00	(D)
21 + miles	135.00	(D)
		(D)
		(D)
		(D)
		(D)
		(D)

** These rates and charges apply to both Price Bands and N-MSA rates and charges.

© 2022 Frontier Communications Parent, Inc. All rights reserved

20. Ethernet Private Line (Cont'd

(L) Rates and Charges* (Cont'd)

(67) Transport - Banded Optical – DS1 (Jointly Provided) (Cont'd)

Jurisdiction	Seven Year Monthly Rate	
North Carolina		
1 - 10 miles	$64.00	(D)
11 - 20 miles	94.00	(D)
21 + miles	126.00	(D)
		(D)
		(D)
		(D)
		(D)
		(D)

* These rates and charges apply to both Price Bands and N-MSA rates and charges.

© 2022 Frontier Communications Parent, Inc. All rights reserved

20. Ethernet Private Line (Cont'd

(L) Rates and Charges** (Cont'd)

(67) Transport - Banded Optical – DS3 (Jointly Provided)

Jurisdiction	One Year Monthly Rate
Illinois	
1 - 10 miles	$ 775.00
11 - 20 miles	2,300.00
21 + miles	3,800.00
Indiana	
1 - 10 miles	$ 775.00
11 - 20 miles	2,175.00
21 + miles	3,600.00

** These rates and charges apply to both Price Bands and N-MSA rates and charges.

© 2022 Frontier Communications Parent, Inc. All rights reserved

20. Ethernet Private Line (Cont'd

(L) Rates and Charges** (Cont'd)

(67) Transport - Banded Optical – DS3 (Jointly Provided) (Cont'd)

Jurisdiction	Three Year Monthly Rate
Illinois	
1 - 10 miles	$725.00
11 - 20 miles	2,125.00
21 + miles	3,500.00
Indiana	
1 - 10 miles	$725.00
11 - 20 miles	2,125.00
21 + miles	3,500.00

** These rates and charges apply to both Price Bands and N-MSA rates and charges.

© 2022 Frontier Communications Parent, Inc. All rights reserved

20. Ethernet Private Line (Cont'd

(L) Rates and Charges** (Cont'd)

(67) Transport - Banded Optical – DS3 (Jointly Provided) (Cont'd)

Jurisdiction	Five Year Monthly Rate
Illinois	
1 - 10 miles	$675.00
11 - 20 miles	2,020.00
21 + miles	3,200.00
Indiana	
1 - 10 miles	$675.00
11 - 20 miles	2,020.00
21 + miles	3,200.00

** These rates and charges apply to both Price Bands and N-MSA rates and charges.

© 2022 Frontier Communications Parent, Inc. All rights reserved

20. Ethernet Private Line (Cont'd

(L) Rates and Charges** (Cont'd)

(67) Transport - Banded Optical – DS3 (Jointly Provided) (Cont'd)

Jurisdiction	Seven Year Monthly Rate
Illinois	
1 - 10 miles	$ 625.00
11 - 20 miles	1,915.00
21 + miles	3,000.00
Indiana	
1 - 10 miles	$ 625.00
11 - 20 miles	1,915.00
21 + miles	3,000.00

** These rates and charges apply to both Price Bands and N-MSA rates and charges.

© 2022 Frontier Communications Parent, Inc. All rights reserved

20. Ethernet Private Line (Cont'd

(L) Rates and Charges* (Cont'd)

(67) Transport - Banded Optical – DS3 (Jointly Provided) (Cont'd)

Jurisdiction	One Year Monthly Rate	
North Carolina		
1 - 10 miles	$ 775.00	(D)
11 - 20 miles	2,200.00	(D)
21 + miles	3,700.00	(D)
		(D)
		(D)
		(D)
		(D)
		(D)

* These rates and charges apply to both Price Bands and N-MSA rates and charges.

© 2022 Frontier Communications Parent, Inc. All rights reserved

20. Ethernet Private Line (Cont'd

(L) Rates and Charges* (Cont'd)

(67) Transport - Banded Optical – DS3 (Jointly Provided) (Cont'd)

Jurisdiction	Three Year Monthly Rate	
North Carolina		
1 - 10 miles	$ 750.00	(D)
11 - 20 miles	2,125.00	(D)
21 + miles	3,500.00	(D)
		(D)
		(D)
		(D)
		(D)
		(D)

* These rates and charges apply to both Price Bands and N-MSA rates and charges.

© 2022 Frontier Communications Parent, Inc. All rights reserved

20. Ethernet Private Line (Cont'd

(L) Rates and Charges* (Cont'd)

(67) Transport - Banded Optical – DS3 (Jointly Provided) (Cont'd)

Jurisdiction	Five Year Monthly Rate	
North Carolina		
1 - 10 miles	$ 700.00	(D)
11 - 20 miles	2,020.00	(D)
21 + miles	3,200.00	(D)
		(D)
		(D)
		(D)
		(D)
		(D)

* These rates and charges apply to both Price Bands and N-MSA rates and charges.

© 2022 Frontier Communications Parent, Inc. All rights reserved

20. Ethernet Private Line (Cont'd

(L) Rates and Charges* (Cont'd)

(67) Transport - Banded Optical – DS3 (Jointly Provided) (Cont'd)

Jurisdiction	Seven Year Monthly Rate	
North Carolina		
1 - 10 miles	$650.00	(D)
11 - 20 miles	1,915.00	(D)
21 + miles	3,000.00	(D)
		(D)
		(D)
		(D)
		(D)
		(D)

* These rates and charges apply to both Price Bands and N-MSA rates and charges.

© 2022 Frontier Communications Parent, Inc. All rights reserved

20. Ethernet Private Line (Cont'd

(L) Rates and Charges** (Cont'd)

(67) Transport - Banded Optical# – OC3 (Jointly Provided)

Jurisdiction	One Year Monthly Rate
Illinois	
1 - 10 miles	$ 1,700.00
11 - 20 miles	5,000.00
21 + miles	8,500.00
Indiana	
1 - 10 miles	$ 1,650.00
11 - 20 miles	5,000.00
21 + miles	8,300.00

Service availability limited. Refer to # footnote on Page 20-17.

** These rates and charges apply to both Price Bands and N-MSA rates and charges.

© 2022 Frontier Communications Parent, Inc. All rights reserved

20. Ethernet Private Line (Cont'd

(L) Rates and Charges** (Cont'd)

(67) Transport - Banded Optical# – OC3 (Jointly Provided) (Cont'd)

Jurisdiction	Three Year Monthly Rate
Illinois	
1 - 10 miles	$1,600.00
11 - 20 miles	4,800.00
21 + miles	8,000.00
Indiana	
1 - 10 miles	$1,600.00
11 - 20 miles	4,800.00
21 + miles	8,000.00

Service availability limited. Refer to # footnote on Page 20-17.

** These rates and charges apply to both Price Bands and N-MSA rates and charges.

© 2022 Frontier Communications Parent, Inc. All rights reserved

20. Ethernet Private Line (Cont'd

(L) Rates and Charges** (Cont'd)

(67) Transport - Banded Optical# – OC3 (Jointly Provided) (Cont'd)

Jurisdiction	Five Year Monthly Rate
Illinois	
1 - 10 miles	$1,500.00
11 - 20 miles	4,600.00
21 + miles	7,750.00
Indiana	
1 - 10 miles	$1,550.00
11 - 20 miles	4,600.00
21 + miles	7,750.00

Service availability limited. Refer to # footnote on Page 20-17.

** These rates and charges apply to both Price Bands and N-MSA rates and charges.

© 2022 Frontier Communications Parent, Inc. All rights reserved

20. Ethernet Private Line (Cont'd

(L) Rates and Charges** (Cont'd)

(67) Transport - Banded Optical# – OC3 (Jointly Provided) (Cont'd)

Jurisdiction	Seven Year Monthly Rate
Illinois	
1 - 10 miles	$1,400.00
11 - 20 miles	4,400.00
21 + miles	7,500.00
Indiana	
1 - 10 miles	$1,500.00
11 - 20 miles	4,400.00
21 + miles	7,500.00

Service availability limited. Refer to # footnote on Page 20-17.

** These rates and charges apply to both Price Bands and N-MSA rates and charges.

© 2022 Frontier Communications Parent, Inc. All rights reserved

20. Ethernet Private Line (Cont'd

(L) Rates and Charges* (Cont'd)

(67) Transport - Banded Optical# – OC3 (Jointly Provided) (Cont'd)

Jurisdiction	One Year Monthly Rate	
North Carolina		
1 - 10 miles	$ 1,700.00	(D)
11 - 20 miles	5,000.00	(D)
21 + miles	8,300.00	(D)
		(D)
		(D)
		(D)
		(D)
		(D)

Service availability limited. Refer to # footnote on Page 20-17.

* These rates and charges apply to both Price Bands and N-MSA rates and charges.

© 2022 Frontier Communications Parent, Inc. All rights reserved

20. Ethernet Private Line (Cont'd

(L) Rates and Charges* (Cont'd)

(67) Transport - Banded Optical# – OC3 (Jointly Provided) (Cont'd)

Jurisdiction	Three Year Monthly Rate	
North Carolina		
1 - 10 miles	$1,600.00	(D)
11 - 20 miles	4,800.00	(D)
21 + miles	8,000.00	(D)
		(D)
		(D)
		(D)
		(D)

Service availability limited. Refer to # footnote on Page 20-17.

* These rates and charges apply to both Price Bands and N-MSA rates and charges.

© 2022 Frontier Communications Parent, Inc. All rights reserved

20. Ethernet Private Line (Cont'd

(L) Rates and Charges* (Cont'd)

(67) Transport - Banded Optical# – OC3 (Jointly Provided) (Cont'd)

Jurisdiction	Five Year Monthly Rate	
North Carolina		
1 - 10 miles	$1,550.00	(D)
11 - 20 miles	4,600.00	(D)
21 + miles	7,750.00	(D)
		(D)
		(D)
		(D)
		(D)
		(D)

Service availability limited. Refer to # footnote on Page 20-17.

* These rates and charges apply to both Price Bands and N-MSA rates and charges.

© 2022 Frontier Communications Parent, Inc. All rights reserved

20. Ethernet Private Line (Cont'd

(L) Rates and Charges* (Cont'd)

(67) Transport - Banded Optical# – OC3 (Jointly Provided) (Cont'd)

Jurisdiction	Seven Year Monthly Rate	
North Carolina		
1 - 10 miles	$1,500.00	(D)
11 - 20 miles	4,400.00	(D)
21 + miles	7,500.00	(D)
		(D)
		(D)
		(D)
		(D)
		(D)

Service availability limited. Refer to # footnote on Page 20-17.

* These rates and charges apply to both Price Bands and N-MSA rates and charges.

© 2022 Frontier Communications Parent, Inc. All rights reserved

20. Ethernet Private Line (Cont'd

(L) Rates and Charges** (Cont'd)

(67) Transport - Banded Optical# – OC12 (Jointly Provided) (Cont'd)

Jurisdiction	One Year Monthly Rate
Illinois	
1 - 10 miles	$ 2,600.00
11 - 20 miles	7,750.00
21 + miles	14,000.00
Indiana	
1 - 10 miles	$ 2,700.00
11 - 20 miles	8,000.00
21 + miles	13,500.00

Service availability limited. Refer to # footnote on Page 20-17.

** These rates and charges apply to both Price Bands and N-MSA rates and charges.

© 2022 Frontier Communications Parent, Inc. All rights reserved

20. Ethernet Private Line (Cont'd

(L) Rates and Charges** (Cont'd)

(67) Transport - Banded Optical# – OC12 (Jointly Provided) (Cont'd)

Jurisdiction	Three Year Monthly Rate
Illinois	
1 - 10 miles	$2,500.00
11 - 20 miles	7,500.00
21 + miles	13,000.00
Indiana	
1 - 10 miles	$2,500.00
11 - 20 miles	7,500.00
21 + miles	13,000.00

Service availability limited. Refer to # footnote on Page 20-17.

** These rates and charges apply to both Price Bands and N-MSA rates and charges.

© 2022 Frontier Communications Parent, Inc. All rights reserved

20. Ethernet Private Line (Cont'd

(L) Rates and Charges** (Cont'd)

(67) Transport - Banded Optical# – OC12 (Jointly Provided) (Cont'd)

Jurisdiction	Five Year Monthly Rate
Illinois	
1 - 10 miles	$2,450.00
11 - 20 miles	7,350.00
21 + miles	12,600.00
Indiana	
1 - 10 miles	$2,450.00
11 - 20 miles	7,350.00
21 + miles	12,250.00

Service availability limited. Refer to # footnote on Page 20-17.

** These rates and charges apply to both Price Bands and N-MSA rates and charges.

© 2022 Frontier Communications Parent, Inc. All rights reserved

20. Ethernet Private Line (Cont'd

(L) Rates and Charges** (Cont'd)

(67) Transport - Banded Optical# – OC12 (Jointly Provided) (Cont'd)

Jurisdiction	Seven Year Monthly Rate
Illinois	
1 - 10 miles	$2,400.00
11 - 20 miles	7,200.00
21 + miles	12,200.00
Indiana	
1 - 10 miles	$2,400.00
11 - 20 miles	7,200.00
21 + miles	12,000.00

Service availability limited. Refer to # footnote on Page 20-17.

** These rates and charges apply to both Price Bands and N-MSA rates and charges.

© 2022 Frontier Communications Parent, Inc. All rights reserved

20. Ethernet Private Line (Cont'd

(L) Rates and Charges* (Cont'd)

(67) Transport - Banded Optical# – OC12 (Jointly Provided) (Cont'd)

Jurisdiction	One Year Monthly Rate	
North Carolina		
1 - 10 miles	$2,700.00	(D)
11 - 20 miles	8,000.00	(D)
21 + miles	13,500.00	(D)
		(D)
		(D)
		(D)
		(D)
		(D)

Service availability limited. Refer to # footnote on Page 20-17.

* These rates and charges apply to both Price Bands and N-MSA rates and charges.

© 2022 Frontier Communications Parent, Inc. All rights reserved

20. Ethernet Private Line (Cont'd

(L) Rates and Charges* (Cont'd)

(67) Transport - Banded Optical# – OC12 (Jointly Provided) (Cont'd)

Jurisdiction	Three Year Monthly Rate	
North Carolina		
1 - 10 miles	$2,500.00	(D)
11 - 20 miles	7,500.00	(D)
21 + miles	13,000.00	(D)
		(D)
		(D)
		(D)
		(D)
		(D)

Service availability limited. Refer to # footnote on Page 20-17.

* These rates and charges apply to both Price Bands and N-MSA rates and charges.

© 2022 Frontier Communications Parent, Inc. All rights reserved

20. Ethernet Private Line (Cont'd

(L) Rates and Charges* (Cont'd)

(67) Transport - Banded Optical# – OC12 (Jointly Provided) (Cont'd)

Jurisdiction	Five Year Monthly Rate	
North Carolina		
1 - 10 miles	$2,450.00	(D)
11 - 20 miles	7,350.00	(D)
21 + miles	12,600.00	(D)
		(D)
		(D)
		(D)
		(D)
		(D)

Service availability limited. Refer to # footnote on Page 20-17.

* These rates and charges apply to both Price Bands and N-MSA rates and charges.

© 2022 Frontier Communications Parent, Inc. All rights reserved

20. Ethernet Private Line (Cont'd

(L) Rates and Charges* (Cont'd)

(67) Transport - Banded Optical# – OC12 (Jointly Provided) (Cont'd)

Jurisdiction	Seven Year Monthly Rate	
North Carolina		
1 - 10 miles	$2,400.00	(D)
11 - 20 miles	7,200.00	(D)
21 + miles	12,200.00	(D)
		(D)
		(D)
		(D)
		(D)
		(D)

Service availability limited. Refer to # footnote on Page 20-17.

* These rates and charges apply to both Price Bands and N-MSA rates and charges.

© 2022 Frontier Communications Parent, Inc. All rights reserved

20. Ethernet Private Line (Cont'd

(L) Rates and Charges** (Cont'd)

(67) Transport - Banded Optical# – OC48 (Jointly Provided)

Jurisdiction	One Year Monthly Rate
Illinois	
1 - 10 miles	$3,235.00
11 - 20 miles	9,700.00
21 + miles	16,175.00
Indiana	
1 - 10 miles	$3,235.00
11 - 20 miles	9,700.00
21 + miles	16,175.00

Service availability limited. Refer to # footnote on Page 20-17.

** These rates and charges apply to both Price Bands and N-MSA rates and charges.

© 2022 Frontier Communications Parent, Inc. All rights reserved

20. Ethernet Private Line (Cont'd

(L) Rates and Charges** (Cont'd)

(67) Transport - Banded Optical# – OC48 (Jointly Provided)

Jurisdiction	Three Year Monthly Rate
Illinois	
1 - 10 miles	$3,150.00
11 - 20 miles	9,500.00
21 + miles	15,700.00
Indiana	
1 - 10 miles	$3,150.00
11 - 20 miles	9,500.00
21 + miles	15,700.00

Service availability limited. Refer to # footnote on Page 20-17.

** These rates and charges apply to both Price Bands and N-MSA rates and charges.

© 2022 Frontier Communications Parent, Inc. All rights reserved

20. Ethernet Private Line (Cont'd

(L) Rates and Charges** (Cont'd)

(67) Transport - Banded Optical# – OC48 (Jointly Provided)

Jurisdiction	Five Year Monthly Rate
Illinois	
1 - 10 miles	$3,050.00
11 - 20 miles	9,300.00
21 + miles	15,350.00
Indiana	
1 - 10 miles	$3,050.00
11 - 20 miles	9,300.00
21 + miles	15,350.00

Service availability limited. Refer to # footnote on Page 20-17.

** These rates and charges apply to both Price Bands and N-MSA rates and charges.

(

© 2022 Frontier Communications Parent, Inc. All rights reserved

20. Ethernet Private Line (Cont'd

(L) Rates and Charges** (Cont'd)

(67) Transport - Banded Optical# – OC48 (Jointly Provided)

Jurisdiction	Seven Year Monthly Rate
Illinois	
1 - 10 miles	$2,975.00
11 - 20 miles	9,100.00
21 + miles	15,100.00
Indiana	
1 - 10 miles	$2,975.00
11 - 20 miles	9,100.00
21 + miles	15,100.00

Service availability limited. Refer to # footnote on Page 20-17.

** These rates and charges apply to both Price Bands and N-MSA rates and charges.

© 2022 Frontier Communications Parent, Inc. All rights reserved

20. Ethernet Private Line (Cont'd

(L) Rates and Charges** (Cont'd)

(67) Transport - Banded Optical# – OC48 (Jointly Provided)

Jurisdiction	One Year Monthly Rate	
North Carolina		
1 - 10 miles	$3,235.00	(D)
11 - 20 miles	9,700.00	(D)
21 + miles	16,175.00	(D)
		(D)
		(D)
		(D)
		(D)
		(D)

Service availability limited. Refer to # footnote on Page 20-17.

** These rates and charges apply to both Price Bands and N-MSA rates and charges.

© 2022 Frontier Communications Parent, Inc. All rights reserved

20. Ethernet Private Line (Cont'd

(L) Rates and Charges* (Cont'd)

(67) Transport - Banded Optical# – OC48 (Jointly Provided)

Jurisdiction	Three Year Monthly Rate	
North Carolina		
1 - 10 miles	$3,150.00	(D)
11 - 20 miles	9,500.00	(D)
21 + miles	15,700.00	(D)
		(D)
		(D)
		(D)
		(D)
		(D)

Service availability limited. Refer to # footnote on Page 20-17.

* These rates and charges apply to both Price Bands and N-MSA rates and charges.

© 2022 Frontier Communications Parent, Inc. All rights reserved

20. Ethernet Private Line (Cont'd

(L) Rates and Charges* (Cont'd)

(67) Transport - Banded Optical# – OC48 (Jointly Provided)

Jurisdiction	Five Year Monthly Rate	
North Carolina		
1 - 10 miles	$3,050.00	(D)
11 - 20 miles	9,300.00	(D)
21 + miles	15,350.00	(D)
		(D)
		(D)
		(D)
		(D)
		(D)

Service availability limited. Refer to # footnote on Page 20-17.

* These rates and charges apply to both Price Bands and N-MSA rates and charges.

© 2022 Frontier Communications Parent, Inc. All rights reserved

20. Ethernet Private Line (Cont'd

(L) Rates and Charges* (Cont'd)

(67) Transport - Banded Optical# – OC48 (Jointly Provided)

Jurisdiction	Seven Year Monthly Rate	
North Carolina		
1 - 10 miles	$2,975.00	(D)
11 - 20 miles	9,100.00	(D)
21 + miles	15,100.00	(D)
		(D)
		(D)
		(D)
		(D)
		(D)

Service availability limited. Refer to # footnote on Page 20-17.

* These rates and charges apply to both Price Bands and N-MSA rates and charges.

© 2022 Frontier Communications Parent, Inc. All rights reserved

20. Ethernet Private Line (Cont'd

20.1 Dedicated SONET Optical Transport Service (DSOTS)#

(A) General

Dedicated SONET Optical Transport Service (DSOTS) provides managed optical transport of multiple protocols which are transmitted over a single fiber optic pair. DSOTS is configured in a diversely routed ring architecture or topology. The ring architecture allows for point-to-point optical services of varying wavelengths to be multiplexed on or off of the ring.

DSOTS allows for the native transmission of multiple high-speed protocols of various wavelengths over a single customized network. The wavelengths are arranged in a channelized format such that the protocol transmitted over each channel is independent of every other channel on the DSOTS ring. The customer must specify, by channel, the interface that defines the transmission speed and protocol being transmitted over the associated wavelength.

(B) Terms and Conditions

A DSOTS ring provides connectivity to multiple customer designated locations (nodes). The minimum node requirement for a DSOTS ring is as follows:

(1) For DSOTS rings that are provided wholly by the Telephone Company, the ring must be configured in one of the following configurations:

(a) a minimum of three nodes provided by the Telephone Company at different locations. At least one of these nodes must be located in a Telephone Company central office (CO) and one must be located at a customer's designated location; or

(b) a minimum of two nodes provided by the Telephone Company at different locations and one or more network optimization mid-span amplifier(s). At least one of these devices (node or amplifier) must be located in a Company CO and at least one of the nodes must be located at a customer's designated location.

Effective February 15, 2007, orders for new DSOTS rings are no longer permitted. The Telephone Company will continue to provide DSOTS pursuant to this Section 20.1 on any existing DSOTS that is in-service as of February 15, 2007, or any order for DSOTS that is placed with the Telephone Company prior to February 14, 2007 (collectively, Existing DSOTS), subject to the following conditions:

a. For any Existing DSOTS that is currently subscribed to a term plan (i.e., commitment periods of 3-, 5-, and 7-years), the Telephone Company will continue to provide the Existing DSOTS for an additional six (6) months beyond the expiration date of the customer's current commitment period, or until the customer discontinues service, whichever comes first. Subject to availability of facilities and equipment, certain moves, additions and/or changes to the Existing DSOTS are permitted provided that such moves, additions and/or changes do not require a new commitment period or an extension to an existing commitment period.

b. For any Existing DSOTS whose term plan expired prior to February 15, 2007, but the Existing DSOTS continued on a month-to-month basis at prevailing rates, the Telephone Company will continue to provide the Existing DSOTS until August 16, 2007, or until customer discontinues service, whichever comes first. Moves, additions, and/or changes are not permitted.

© 2022 Frontier Communications Parent, Inc. All rights reserved

20. Ethernet Private Line (Cont'd

20.1 Dedicated SONET Optical Transport Service (DSOTS)#(Cont'd)

2.

(B) Terms and Conditions (Cont'd)

(2) For DSOTS rings jointly provided by the Telephone Company and one or more other exchange telephone companies in a multiple company billing arrangement as set forth in Section 2.7.3, the DSOTS ring must be configured with a minimum of three nodes or two nodes and one network optimization mid-span amplifier. A minimum of one device (node or mid-span amplifier) must be provided by the Telephone Company with that device being located in a Telephone Company CO and the remaining devices may be provided by one or more of the other exchange telephone companies jointly providing the service. If more than one device is provided by the Telephone Company, the additional devices may be located at either a customer designated location or in a Telephone Company CO. Jointly provided DSOTS rings, must meet all of the same requirements that are set forth in this Guide for wholly provided DSOTS rings. The customer or third party is responsible for engineering its portion of the jointly provided ring.

When two nodes are located in the same building, there will be no diversity between the two nodes.

The DSOTS ring is comprised of nodes, ring mileage, network optimization (amplification) and optical transport channels. These elements are described in (C) following and are provided at the rates set forth in Sections 20.1(K) following.

Service availability limited. Refer to # footnote on Page 20-281.

© 2022 Frontier Communications Parent, Inc. All rights reserved

20. Ethernet Private Line (Cont'd

20.1 Dedicated SONET Optical Transport Service (DSOTS)#(Cont'd)

(B) Terms and Conditions (Cont'd)

The customer will be billed additional charges for any charges levied the Telephone Company for space and power required to place nodes on the Company's side of the network interface.

Connection of SONET Connects to a DSOTS ring is provided over an equal speed optical transport channel (e.g. a 155.52 Mbps DSOTS channel would connect to an OC3 SONET Service found in Section 20). All other applicable SONET regulations as set forth in 20(G) preceding apply to the SONET Service.

Custom Connect and DSR are the only Ethernet Private Line SONET services that may be provided over a DSOTS backbone.

Connection of a Ethernet Private Line OC3c or OC12c Ethernet-to-SONET mapped service is provided over an equal speed SONET OC3c or OC12c protected optical transport channel as described in 20.3 following.

Connection of a Ethernet Private Line 1 Gbps Ethernet Full Rate service is provided over a Gigabit Ethernet optical transport channel.

Connection of a Ethernet Private Line Gigabit Fiber Channel and/or Gigabit FICON service is provided over a Gigabit Fiber Channel and/or Gigabit FICON optical transport channel.

A DSOTS ring may also be connected to a Telephone Company provided dedicated SONET ring or Telephone Company provided point-to-point SONET service, provided that such connections are technically and operationally feasible, as determined by the Telephone Company.

Service availability limited. Refer to # footnote on Page 20-281.

© 2022 Frontier Communications Parent, Inc. All rights reserved

20. Ethernet Private Line (Cont'd

20.1 Dedicated SONET Optical Transport Service (DSOTS) #(Cont'd)

(B) Terms and Conditions (Cont'd)

The use of a multi-port interface card requires that all channels on a single card be interrupted during periods when the Telephone Company is performing maintenance on that card. No credit for such periods of interruption will apply.

The customer is responsible to ensure that its facilities and equipment meet any applicable technical requirements or limitations for the protocol being transmitted over the optical transport channels.

For DSOTS rings that are provided wholly by the Telephone Company, the Telephone Company is responsible for the overall design and configuration of the DSOTS ring. Construction of the ring will not begin until such design and configuration are mutually agreeable to both the customer and the Telephone Company.

In the case of a DSOTS ring that is jointly provided by the Telephone Company and one or more other exchange telephone companies in a multiple billing arrangement as set forth in Section 2.7.3 preceding, the overall design and configuration of the DSOTS ring must be mutually agreeable to the Telephone Company, any other exchange telephone company(s) involved and to the customer. When the Telephone Company is an intermediate provider of transport as described in Section 2.7.4(B)(2) preceding, at least one node of the DSOTS ring must be located in a Telephone Company CO.

Credit for service interruption of DSOTS is set forth in Section 2.8.1.1(A)(10) preceding.

The technical specifications for DSOTS are delineated in Technical Publications GR-2918-CORE, Issue 4, GR-2979-CORE, Issue 3, GR-1312-CORE, Issue 3, ITU-T G.959.1 and ITU-T G.692. Technical specifications for the underlying protocols transmitted over the DSOTS ring are specified in (C)(4) following.

Service availability limited. Refer to # footnote on Page 20-281.

© 2022 Frontier Communications Parent, Inc. All rights reserved

20. Ethernet Private Line (Cont'd

20.1 Dedicated SONET Optical Transport Service (DSOTS) #(Cont'd)

(C) Service Components

(1) Nodes are dense wave division multiplexing (DWDM) devices located at customer designated premises or Telephone Company wire centers from which optical transport channels are multiplexed on or off of the DSOTS ring. The type of node that is deployed at each location is determined by the number of optical transport channels that will be multiplexed on or off of the DSOTS ring at that location.

4 Channel Node
Placement of a 4 channel node at a location enables up to 4 protected optical transport channels to be deployed. Each protected optical channel may be replaced by two unprotected optical channels up to a maximum of 8 possible channels on the node. A 4 channel node may be utilized as the primary node at a location or as an expansion node to expand the capacity of a 16 channel primary node. 4 channel nodes are subject to the availability of suitable facilities and equipment to provide such device. No more than one 4 channel node will be provided at a location.

16 Channel Node
Placement of a 16 channel primary node at a location enables up to 16 protected optical transport channels to be deployed. Each protected optical channel may be replaced by two unprotected optical channels up to a maximum of 32 possible channels on the primary node.

The capacity of a 16 channel node may be increased through the addition of an expansion node at the same location. A 4 channel expansion node enables up to 20 protected optical transport channels (i.e., 16 on the primary node and 4 on the expansion node) to be deployed at a single location. Each protected optical channel may be replaced by two unprotected optical channels up to a maximum of 40 possible channels at that location. A 16-channel expansion node enables up to 32 protected optical transport channels (i.e., 16 on the primary node and 16 on the expansion node) to be deployed at a single location. Each protected optical channel may be replaced by two unprotected optical channels up to a maximum of 64 possible channels at that location.

The maximum number of optical transport channels that can be deployed at a single location is dependent upon the specific configuration of the DSOTS ring and the type of optical transport channels being deployed from that location.

Service availability limited. Refer to # footnote on Page 20-281.

© 2022 Frontier Communications Parent, Inc. All rights reserved

20. Ethernet Private Line (Cont'd

20.1 Dedicated SONET Optical Transport Service (DSOTS)#(Cont'd)

(C) Service Components (Cont'd)

(2) Except as set forth in 2.7.3(C)(5) preceding, DSOTS Ring Mileage for a full ring service configuration is the total of airline distances between devices (nodes and amplifiers) rounded up to the nearest mile. The mileage rate is based on total ring capacity and not on individual services between devices. For example, the mileage charge for a five device ring with two mid-span amplifiers and a distance of 4.3 miles between each device (21.5 total miles) would be calculated by multiplying the mileage rate in Section 20.1(K) following by 22 miles. The mileage between devices (e.g., a primary node and an expansion node or an At-Node amplifier, as applicable) located at the same customer designated premises or Telephone Company wire center is zero. This mileage calculation applies regardless of the number of services on the ring.

(3) Network Optimization provides for amplification of the signal to ensure acceptable optical levels. When required, amplification is performed at the node (primary node or expansion node) or in a Telephone Company wire center when mid-span amplification of the signal is required between nodes. Node amplification occurs in one or two directions (East to West and/or West to East). Amplification in two directions requires the use of two at-node amplifiers. Mid-span amplification occurs simultaneously in both directions (East to West and West to East). The Telephone Company shall have sole responsibility in determining when amplification is required and the quantity and type of amplification necessary to maintain acceptable optical levels.

Service availability limited. Refer to # footnote on Page 20-281.

© 2022 Frontier Communications Parent, Inc. All rights reserved

20. Ethernet Private Line (Cont'd

20.1 Dedicated SONET Optical Transport Service (DSOTS) #(Cont'd)

(C) Service Components (Cont'd)

(4) Optical transport channels allow for optical services to be multiplexed on to or off of the DSOTS ring at locations equipped with a DSOTS node. An optical interface at the node allows for connection of the applicable protocol to the customer's equipment. Optical transport channels are provided on a point-to-point basis and are available on a protected or unprotected basis depending on the protocol being transmitted and the level of redundancy required for the optical channel. These channels may be ordered using a single-port interface (each a single channel per interface card) or using a multi-port interface. A multi-port interface is a facility capable of supporting up to 4 multi-port channels of ESCON, Fiber Channel, FDDI, Fast Ethernet, D1 Video, or any combination of these multi-port channels. A multi-port optical transport channel provides a two-point facility over the DSOTS ring for the purpose of aggregating multiple optical channels over a single wavelength. Some protocols have facility distance limitations and may affect the design or availability of the DSOTS ring or its optical transport channels. The multi-port interface is provided with a short reach, 2-fiber interface with a 1310nm signal.

A protected optical channel allows for a single signal from the customer to be duplicated and sent over separate diverse routes (working and protected) within the DSOTS network.

An unprotected optical channel provides minimum protection of the signal from the customer as the signal is routed over a single path.

Optical transport channels are delivered over a single-port interface or multi-port interface unless otherwise specified. The use of a multi-port interface and the type of optical transport channels that can be provided over a single-port or multi-port interface are subject to the availability of suitable equipment to provide the requested service.

All signals generated by Customer provided equipment and delivered to the Telephone Company for multiplexing on to DSOTS must meet industry standards and specifications for the underlying protocol. The customer is responsible to perform any error detection and error correction of the data generated by its equipment. The Telephone Company assumes no responsibility for the quality of the signal generated by the customer or any customer provided equipment and will deliver the signal to the receiving location in the same format and condition as generated by the customer.

Optical transport channels used in the provision of Switched Access Services are limited to SONET OC3, OC12, OC48 and OC192 protected or unprotected optical transport channels.

Service availability limited. Refer to # footnote on Page 20-281.

© 2022 Frontier Communications Parent, Inc. All rights reserved

20. Ethernet Private Line (Cont'd

20.1 Dedicated SONET Optical Transport Service (DSOTS) #(Cont'd)

(C) Service Components (Cont'd)

(4) (Cont'd)

The Telephone Company will transmit the following protocols over DSOTS optical transport channels:

SONET OC3 – for transmission of 155.52 Mbps synchronous optical data transmission capability. SONET OC3 is delivered over a single-port interface only.

SONET OC3c – for transmission of concatenated 155.52 Mbps synchronous optical data transmission capability. SONET OC3c is delivered over a single-port interface only.

SONET OC12 – for transmission of 622.08 Mbps synchronous optical data transmission capability. SONET OC12 is delivered over a single-port interface only.

SONET OC12c – for transmission of concatenated 622.08 Mbps synchronous optical data transmission capability. SONET OC12c is delivered over a single-port interface only.

SONET OC48 – for transmission of 2.488 Gbps synchronous optical data transmission capability. SONET OC48 is delivered over a single-port interface only.

SONET OC48c – for transmission of concatenated 2.488 Gbps synchronous optical data transmission capability. SONET OC48c is delivered over a single-port interface only.

SONET OC192 – for transmission of 9.953 Gbps synchronous optical data transmission capability. SONET OC192 is delivered over a single-port interface only.

SONET OC192c – for transmission of concatenated 9.953 Gbps synchronous optical data transmission capability. SONET OC192c is delivered over a single-port interface only.

ESCON* – for transmission of one 200 Mbps Enterprise Service Connection channel between the same two DSOTS nodes used for computer-to-computer data exchange. An ESCON signal is limited to a maximum distance of 43km (physical route kilometers) between the locations involved. ESCON is delivered over a multi-port interface only.

FICON* – for transmission of 1 Gbps and 2 Gbps Fiber Connection among mainframes, storage devices and peripherals on a single channel. A FICON signal is limited to a maximum distance of 100km (physical route kilometers) between the locations involved. FICON is delivered over a single-port interface only.

* Denotes a data optical transport channel.
\# Service availability limited. Refer to # footnote on Page 20-281.

© 2022 Frontier Communications Parent, Inc. All rights reserved

20. Ethernet Private Line (Cont'd

20.1 Dedicated SONET Optical Transport Service (DSOTS)#(Cont'd)

(C) Service Components (Cont'd)

(4) (Cont'd)

The Telephone Company will transmit the following protocols over DSOTS optical transport channels (Cont'd):

Fiber Channel* – for transmission of 2.125 Gbps, 1.0625 Gbps, 531 Mbps, 266 Mbps and 133 Mbps in a serial link between supercomputers, mainframes, workstations, desktop computers, storage devices, displays and other peripherals. A Fiber Channel signal is limited to a maximum distance of 100km (physical route kilometers) between the locations involved. Fiber Channel signals at transmission speeds of 2.125 Gbps, 1.0625 Gbps, 531 Mbps, 266 Mbps, and 133 Mbps are delivered over a single-port interface. Fiber Channel signals at transmission speeds of 266 Mbps and 133 Mbps may also be delivered over a multi-port interface.

ETR/CLO* – a channel for transmission of an 8 Mbps External Timing Reference/Control Link Oscillator signal for distributing time-of-day information to all central processing units in the Sysplex and to keep the Sysplex timer units synchronized with each other. An ETR/CLO signal is limited to a maximum distance of 40km (physical route kilometers) between the locations involved. ETL/CLO is delivered over a single-port interface only.

FDDI* – for transmission of 100 Mbps Fiber Distributed Data Interface channels for general purpose interconnection between computers and peripheral equipment, including interconnection of Local Area Networks and other networks. FDDI is delivered over a single-port or multi-port interface.

ISC* – for transmission of 1.06 Gbps InterSystem Channel for data caching, locking and queuing services between coupling facility and a central processing unit. An ISC signal is limited to a maximum distance of 40km (physical route kilometers) between the locations involved. ISC is delivered over a single-port interface only.

ISC3* – for transmission of 2.125 Gbps InterSystem Channel for data caching, locking and queuing services between coupling facility and a central processing unit. An ISC3 signal is limited to a maximum distance of 40 km (physical route kilometers) between the locations involved. ISC3 is delivered over a single-port interface only.

* Denotes a data optical transport channel.

Service availability limited. Refer to # footnote on Page 20-281.

© 2022 Frontier Communications Parent, Inc. All rights reserved

20. Ethernet Private Line (Cont'd

20.1 Dedicated SONET Optical Transport Service (DSOTS #(Cont'd)

(C) Service Components (Cont'd)

(4) (Cont'd)

Fast Ethernet* – for 100 Mbps transmission of Ethernet. Fast Ethernet is delivered over a single-port or multi-port interface.

Gigabit Ethernet* – for 1.0 Gbps transmission of Ethernet. Gigabit Ethernet is delivered over a single-port interface only.

10 Gigabit Ethernet LAN-PHY – 10GBASE-R (LAN PHY) interfaces offer an effective line rate of 10.3125 Gbps (10 Gbps of data traffic encoded in a 64B/66B protocol compared to the traditional 8B/10B protocol of Gigabit Ethernet). 10 Gigabit Ethernet LAN-PHY is delivered over a single-port interface only.

10 Gigabit Ethernet WAN-PHY – 10GigE data rate and format compatible with the SONET OC192c transmission format defined by ANSI. 10 Gigabit Ethernet WAN-PHY is delivered over a single-port interface only.

D1 Video* – for uncompressed digital transmission of video signals operating at 270 Mbps. D1 Video is delivered over a single-port or multi-port interface.

* Denotes a data optical transport channel.

\# Service availability limited. Refer to # footnote on Page 20-281.

© 2022 Frontier Communications Parent, Inc. All rights reserved

20. Ethernet Private Line (Cont'd

20.1 Dedicated SONET Optical Transport Service (DSOTS) (Cont'd)

(C) Service Components (Cont'd)

(4) (Cont'd)

The technical specifications for the protocols transmitted over DSOTS optical transport channels are delineated in the following technical publications:

Protocol Transmitted	Technical Publication
SONET OC3, OC12, OC48	GR-253-CORE, Issue 4
SONET OC3c, OC12c, OC48c	GR-253-CORE, Issue 4
SONET OC 192, OC192c	GR-253-CORE, Issue 4
ESCON, FICON	SA23-0394-06, (Seventh Edition)
	GA23-0367-12, (Thirteenth Edition)
	ANSI INCITS 296-1997 (R2007)
ISC	SG24-5638-00
ISC3	SA23-0395-05 (Sixth Edition)
ETR/CLO	SG24-2070-00
Fibre Channel	ANSI INCITS 303-1998 (R2003)
FDDI	IEEE X3.802.3u-1995
	ANSI INCITS 166-1989 (R2005)
	ANSI INCITS 148 -1998 (R2004)
Fast Ethernet	IEEE 802.3-2005/Cor2/D2.0-2007
	IEEE 802.3z-1998
Gigabit Ethernet	IEEE 802.3-2005/Cor2/D2.0-2007
	IEEE 802.3z-1998
10 Gigabit Ethernet WAN-PHY	IEEE 802.3ae-2002
10 Gigabit Ethernet LAN-PHY	IEEE 802.3ae-2002
D1 Video	SMPTE 0259M – 2008

Service availability limited. Refer to # footnote on Page 20-281.

© 2022 Frontier Communications Parent, Inc. All rights reserved

20. Ethernet Private Line (Cont'd

20.1 Dedicated SONET Optical Transport Service (DSOTS) #(Cont'd)

(C) Service Components (Cont'd)

(5) An example of an Dedicated SONET Optical Transport Service (DSOTS) Ring is diagrammed below:

3.

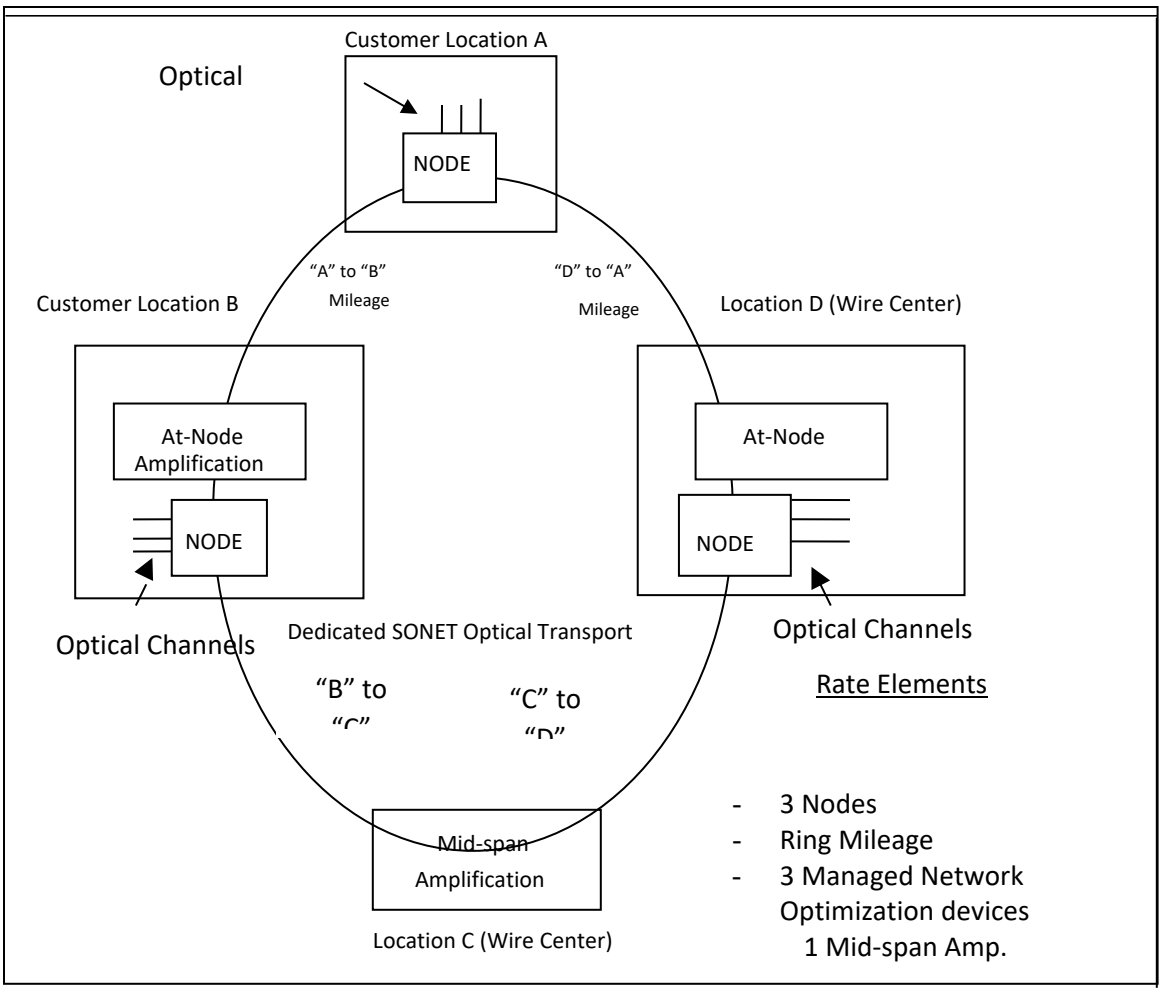

Service availability limited. Refer to # footnote on Page 20-281.

© 2022 Frontier Communications Parent, Inc. All rights reserved

20. Ethernet Private Line (Cont'd

20.1 Dedicated SONET Optical Transport Service (DSOTS) #(Cont'd)

Application of Rates and Charges

(1) DSOTS is available for 3, 5 and 7 year commitment periods for the nodes, ring mileage, network optimization at-node amplification (subject to (9) following), network optimization mid-span amplification and optical transport channels.

(2) Nodes, network optimization mid-span amplification and SONET optical transport channels added subsequent to the initial installation may be coterminous to the expiration date of the DSOTS at the rates and charges specified for the term plan on the existing DSOTS or may require an extension to the existing plan as follows. If the addition is prior to the 21st month for an existing 3-year plan, prior to the 36th month for an existing 5-year plan, or prior to the 50th month for an existing 7-year plan, the addition will be coterminous to the expiration date of the DSOTS. If the addition is after the aforementioned periods, the customer must extend the commitment period of its existing plan for an additional one-year for a 3-year plan, an additional 2 years for a 5-year plan, or an additional 3 years for a 7-year plan. SONET services associated with DSOTS are subject to the termination liability set forth in Section 20(G) preceding.

(3) Effective August 16, 2005, separate rates and charges for network optimization at-node amplification apply subject to (9) following.

(4) Data optical transport channels added subsequent to the initial installation will be coterminous to the expiration date of the DSOTS at the rates and charges specified for the term plan on the existing DSOTS. These channels are subject to a minimum service period of three months.

(5) The addition of SONET and/or Data optical transport channels subsequent to the initial installation of service may also require the addition of an expansion node(s) and/or network optimization device(s) to accommodate the increase in channels. The addition of an expansion node or network optimization is subject to the conditions set forth above.

Service availability limited. Refer to # footnote on Page 20-281.

© 2022 Frontier Communications Parent, Inc. All rights reserved

20. Ethernet Private Line (Cont'd

20.1 Dedicated SONET Optical Transport Service (DSOTS) # (Cont'd)

Application of Rates and Charges (Cont'd)

(6) Monthly recurring charges apply for the nodes, ring mileage, network optimization mid-span amplification, network optimization at-node amplification subject to (9) following, and optical transport channels. The monthly rate for an optical transport channel applies for the entire point-to-point connection. Once a term period expires, the prevailing rates of the current plan will continue at Category I or Category II rates, as determined in (9) following, until the customer cancels service or requests a new term plan.

(7) When the optical transport channel is provided with a multi-port interface, rates and charges apply for the multi-port facility and for each multi-port channel riding the multi-port facility. When an optical transport channel is delivered over a multi-port interface, the multi-port facility and each multi-port channel riding the multi-port facility must be billed to the same customer who subscribes to the DSOTS ring.

(8) Nonrecurring charges for DSOTS apply for the initial installation of service and for any subsequent network optimization mid-span amplification or optical transport channel that is added at any time after the initial installation of service. A nonrecurring charge also applies for the subsequent installation of a node or for the augmentation of an existing node. Node augmentation provides for the positioning of additional port capacity on an existing node or for reconfiguration of existing port capacity on the node. A nonrecurring charge also applies to upgrade a 4 channel primary node to a 16 channel primary node or a 4 channel expansion node to a 16 channel expansion node.

Service availability limited. Refer to # footnote on Page 20-281.

© 2022 Frontier Communications Parent, Inc. All rights reserved

20. Ethernet Private Line (Cont'd

20.1 Dedicated SONET Optical Transport Service (DSOTS) # (Cont'd)

Application of Rates and Charges (Cont'd)

(9) Rates and charges for DSOTS nodes, ring mileage, network optimization at-node amplification, network optimization mid-span amplification and optical transport channels which are in-service as of, or ordered prior to, August 16, 2005 are subject to Category I rates, unless the customer has converted to Category II rates under (9)(c) following.

Rates and charges for DSOTS nodes, ring mileage, network optimization mid-span amplification and optical transport channels which are ordered on or after August 16, 2005 are subject to Category II rates. Category II rates also apply to DSOTS which are converted from Category I under (9)(c) following.

(a) Category I rates are grandfathered as of August 16, 2005 and apply to DSOTS that is in-service as of, or order prior to, August 16, 2005 under this Section 20, unless the customer elects to convert DSOTS billing to Category II rates in accordance with (9)(c) following. Category I rates are subject to separate rates and charges for network optimization at-node amplification.

(b) Category II rates apply to each DSOTS which is ordered on or after August 16, 2005 under this Section 20.1. Category II rates also apply to nodes, network optimization, mileage, and optical transport channels which are ordered on or after August 16, 2005 as an addition to an existing DSOTS, regardless of whether or not such existing DSOTS is subject to Category I or Category II rates. When the Telephone Company's network design for such addition to an existing DSOTS requires that a network optimization at-node amplifier be added to an existing node that is billed at Category I rates, the billing for such node will be converted to the Category II node rate element, which node rate element includes amplification at the node.

Notwithstanding anything to the contrary in any applicable Contract Tariff Options, any reduction or discount to Special Access rates offered under Contract Tariff Options 5 or 9 of Section 21 following will not be applied to Category II rates.

Category II rates also apply to DSOTS that are converted from Category I rates to Category II rates in accordance with (9)(c) following. Category II rates do not include separate rates and charges for network optimization at-node amplification which is provided as part of the node rate element on or after August 16, 2005.

Service availability limited. Refer to # footnote on Page 20-281.

© 2022 Frontier Communications Parent, Inc. All rights reserved

20. Ethernet Private Line (Cont'd

20.1 Dedicated SONET Optical Transport Service (DSOTS) # Cont'd)

Application of Rates and Charges (Cont'd)

(9) (Cont'd)

(c) A customer subject to Category I rates under (9)(a) preceding may convert to Category II rates subject to the following:

(1) The customer must submit an access order for the conversion to Category II rates.

(2) Separate rates and charges applicable to network optimization at-node amplification under Category I rates shall cease coincident with the date that billing at Category II rates commences.

(3) A new commitment period commences with the conversion from Category I rates to Category II rates. The customer must select a new commitment period from those offered under (1) preceding. The new commitment period must be equal to, or longer than, the original commitment period for the DSOTS that was subject to the Category I rates. For example, a DSOTS under a 5-year commitment period at Category I rates may only convert to a new 5-year commitment period or a new 7-year commitment period upon conversion to Category II rates

(4) There can be no physical work activity (e.g., moves, additions, changes) associated with the orders for conversion to Category II rates. Upon conversion, all terms and conditions of this Guide shall apply to the converted DSOTS service, including any applicable termination liability and minimum period obligations.

(5) When the conversion is ordered between the period beginning August 16, 2005 and ending November 16, 2005, the conversion will not be subject to minimum period and/or termination liability as they may otherwise apply for early termination of the Category I term plan, provided that the conditions set forth in (1) through (4) preceding are met.

Conversion from Category I rates to Category II rates that is ordered after November 9, 2005 is subject to all minimum period and/or termination liability as they apply for early termination of the Category I term plan. Additionally, conversion to Category II rates ordered after November 16, 2005 is subject to the requirements set forth in (1) through (4) preceding.

Service availability limited. Refer to # footnote on Page 20-281.

© 2022 Frontier Communications Parent, Inc. All rights reserved

20. Ethernet Private Line (Cont'd

20.1 Dedicated SONET Optical Transport Service (DSOTS) # (Cont'd)

Application of Rates and Charges (Cont'd)

(10) A change in the type (e.g., Fiber Channel to FICON) or optical carrier rate (e.g., OC3 to OC12) of optical transport channel is treated as a discontinuance of the existing channel and an installation of a new optical transport channel. Optical transport channels ordered on or after August 16, 2005 are provided at Category II rates.

(11) When an optical transport channel is ordered to connect with SONET Services, the optical transport channel will be billed to the SONET customer.

(12) When an optical transport channel is ordered to connect to a Telephone Company provided dedicated SONET ring or Telephone Company provided point-to-point SONET service, the optical channel will be billed to the dedicated SONET ring or point-to-point SONET service customer, as applicable.

(E) Termination Liability

(1) Termination liability applies to DSOTS and is charged per monthly rate element on all nodes, network optimization and SONET optical transport channels and network management methods. SONET services associated with DSOTS are subject to the termination liability in Sections 20(G). Data optical transport channels as set forth in (C) preceding are not subject to termination liability; however, such channels are subject to a minimum service period of three-months.

(2) A separate termination liability charge is assessed for each rate element associated with the disconnected DSOTS or a Network Management Method. For example, assume that the customer subscribes to a DSOTS ring that is arranged with the Direct TL1 Monitoring Optional Feature, as set forth in (L)(2) following. Further, assume that the customer disconnects the DSOTS ring along with the Direct TL1 Monitoring Optional Feature prior to the end of the commitment period. Then, the customer shall pay termination liability on the nodes, network optimization, partial ring high-speed interfaces, optical transport channels and the Direct TL1 Monitoring Optional Feature monthly recurring rate elements as set forth in this section.

(3) Reserved for Future Use (C)

(4) Termination liability will not apply on any DSOTS service or Network Management Method if (1) a customer changes its term plan to a longer commitment period; or (2) a 4 channel primary node is upgraded to a 16 channel primary node; (3) a 4 channel expansion node is upgraded to a 16 channel expansion node; or (4) a term plan subject to Category I rates is converted to a new term plan subject to Category II rates, when such conversion satisfies the conditions in (9)(c) preceding and is ordered on or before November 16, 2005.

(5) Termination liability will apply when the conditions above are not met and the customer cancels service prior to expiration of the plan period. If the cancellation occurs within the first two years of a term plan, termination liability is equal to 100 percent of the monthly charges for the unexpired portion of the first two years, and 25 percent of the monthly charges for the remainder of the plan. If the customer cancels after the first two years of service, then termination liability is equal to 25 percent of the monthly charges for the remaining life of the term.

Service availability limited. Refer to # footnote on Page 20-281.

© 2024 Frontier Communications Parent, Inc. All rights reserved

20. Ethernet Private Line (Cont'd

20.1 Dedicated SONET Optical Transport Service (DSOTS) # (Cont'd)

(E) Termination Liability (Cont'd)

(6) For DSOTS with a commitment period which was extended under following, termination liability is calculated as the difference between (1) the monthly rates for the highest Term Pricing Plan commitment period that could have been satisfied prior to disconnection of the service or cancellation of the plan and (2) the monthly rates already paid during both the initial commitment period and the extended commitment period for the period of time the service was in effect.

(F) Conversions

(1) Customers who wish to move or convert existing SONET, High Capacity Switched Access Entrance Facilities or High Capacity Special Access Services to DSOTS may do so without conversion charges (termination liability and installation charges) as long as the total capacity of the SONET, Switched Access Entrance Facility or Special Access Service purchased by the customer does not decrease.

(2) Customers who wish to convert existing DSOTS under a term plan with Category I rates to a new term plan with Category II rates may do so without conversion charges (termination liability, minimum period obligation and installation charges) as long as the requirements set forth in (9)(c) preceding are met and is ordered on or before November 16, 2005.

(G) Deployment and Availability

Since DSOTS is a dedicated high capacity customized network, it is deployed upon customer request. Where suitable facilities are not generally available, rates and charges as set forth in the Telephone Company's Tariff F.C.C. NO. 7, Special Construction, may apply.

DSOTS is available based on negotiated intervals as described in 3.2.1 preceding.

(H) Shared Use

The general regulations applicable to the shared use of Ethernet Private Line are set forth in Section 20 preceding. In the case of DSOTS, the monthly rate for the Switched Access DSOTS Service ring mileage, node and network optimization rates will be reduced accordingly based upon the total channel capacity of the DSOTS ring and the monthly rate for the equivalent Special Access ring mileage, node and network optimization rate elements will apply. The total channel capacity for a DSOTS ring is measured in terms of the total number of optical transport channels that can be transported over the ring.

Service availability limited. Refer to # footnote on Page 20-281.

© 2022 Frontier Communications Parent, Inc. All rights reserved

20. Ethernet Private Line (Cont'd

20.1 Dedicated SONET Optical Transport Service (DSOTS) # (Cont'd)

Extension of a Commitment Period

(1) The customer has the option, at any time prior to the expiration date for its commitment period, to extend its Term Pricing Plan to a plan with a longer commitment period, for which time-in-service credit will be allowed for the plan being extended. The commitment period selected for the extended plan must be longer than the commitment period of the plan being extended.

- A 3-Year Term may be extended to either a 5-Year or 7-Year Term Plan.
- A 5-Year Term may be extended to a 7-Year Term Plan.

(2) Time-in-service credit on the plan being extended will be granted and applied towards the new extended plan. For example, a DSOTS with a 3-Year term plan that has been in-service for 18 months will allow for 18 months of time-in-service credit towards the extended plan.

(3) The rate for the longer commitment period will apply effective with the first bill day following the order to extend the plan and continue through the remainder of the commitment period associated with the extended plan. No adjustment for the increased discount associated with the extended plan will be made to the monthly rates already billed on the plan being extended.

(4) A Category I term plan that is converted under (9)(c) preceding to a Category II term plan is not eligible for time-in-service credit on the Category II term plan.

(5) The customer may also extend the commitment period in order to install additional nodes, network optimization devices or SONET optical channels as described in preceding.

(6) Extension of a term pricing plan subject to Category I rates will be extended at Category I rates. However, nodes, network optimization (mid-span and/or at-node amplification), ring mileage and optical transport channels added during the period of extension are subject to Category II rates unless otherwise specified.

(7) Extension of a term pricing plan under Category II rates will be extended at Category II rates.

Service availability limited. Refer to # footnote on Page 20-281.

© 2022 Frontier Communications Parent, Inc. All rights reserved

20. Ethernet Private Line (Cont'd

20.1 Dedicated SONET Optical Transport Service (DSOTS) # (Cont'd)

(J) Channel Interface Codes

The following channel interface codes is used for the DSOTS ring:

NCI
02FMF.04 for 4 Channel Node (Primary or Expansion)
02FM.016 for 16 Channel Node (Primary or Expansion)

The following channel interface codes are used for channels using wavelengths on the DSOTS ring:

CI
02FCF.10C (FDDI SM 125 Mbps)
02FCF.10D (FDDI MM 125 Mbps)
02FCF.15 (SONET OC3/OC3c)
02FCF.62 (SONET OC12/OC12c)
02FCF.25 (SONET OC48/OC48c)
02SOF.B,D,F,X (SONET OC192/192c)
02FCF.CCS (ESCON)
02FCF.CTS (ETR/CLO)
02FCF.FC (1.0625 Gbps Fiber Channel)
02FCF.FC1 (133 Mbps Fiber Channel)
02FCF.FC2 (266 Mbps Fiber Channel)
02FCF.FC5 (531 Mbps Fiber Channel)
02OPF.A02, A04, A07 (2.125 Gbps Fibre Channel)
02FCF.GFM (1Gbps FICON)
02OPF.A02, A04, A07 (2.125 Gbps FICON)
02FCF.GIS (ISC)
02OPF.A02, A04, A07 (ISC3 at 2.125Gbps)
02FMF.S (DWDM 4-Port 1.25 Gbps)
02LNF.100 (Fast Ethernet)
02LNF.1GE (Gigabit Ethernet)
02LNF.A02 (10 Gigabit Ethernet WAN-PHY)
02LNF.A02 (10 Gigabit Ethernet LAN-PHY)
02TD6.E (D1 Video)

Service availability limited. Refer to # footnote on Page 20-281.

© 2022 Frontier Communications Parent, Inc. All rights reserved

20. Ethernet Private Line (Cont'd)
20.1 Dedicated SONET Optical Transport Service (DSOTS) # (Cont'd)
(K) Rates and Charges

(1) Nodes, per node

(Jurisdiction: Illinois, Indiana, Michigan, North Carolina, Ohio, South Carolina, and Wisconsin) (C)

	Category I# Monthly Rate	Initial Nonrecurring Charge
3-Year Term		
4 Channel Node		
– Primary or Expansion Customer Premises		
N-MSA	$7,500.00	$1.00
Price Band A	7,500.00	1.00
Price Band B	7,500.00	1.00
Price Band C	7,500.00	1.00
-- Primary or Expansion Central Office		
N-MSA	7,500.00	1.00
Price Band A	7,500.00	1.00
Price Band B	7,500.00	1.00
Price Band C	7,500.00	1.00
16 Channel Node		
– Primary Customer Premises		
N-MSA	$12,500.00	$1.00
Price Band A	12,500.00	1.00
Price Band B	12,500.00	1.00
Price Band C	12,500.00	1.00
– Primary Central Office		
N-MSA	12,500.00	1.00
Price Band A	12,500.00	1.00
Price Band B	12,500.00	1.00
Price Band C	12,500.00	1.00
– Expansion Customer Premises		
N-MSA	12,500.00	1.00
Price Band A	12,500.00	1.00
Price Band B	12,500.00	1.00
Price Band C	12,500.00	1.00
– Expansion Central Office		
N-MSA	12,500.00	1.00
Price Band A	12,500.00	1.00
Price Band B	12,500.00	1.00
Price Band C	12,500.00	1.00

Service availability limited. Refer to # footnote on Page 20-281.

© 2022 Frontier Communications Parent, Inc. All rights reserved

20. Ethernet Private Line (Cont'd)
20.1 Dedicated SONET Optical Transport Service (DSOTS) # (Cont'd)
(K) Rates and Charges (Cont'd)

(1) Nodes, per node (Cont'd)

(Jurisdiction: Illinois, Indiana, Michigan, North Carolina, Ohio, South Carolina, and Wisconsin) (C) (C) (C)

	Category I# Monthly Rate	Initial Nonrecurring Charge
5-Year Term		
4 Channel Node		
– Primary or Expansion Customer Premises		
N-MSA	$3,900.00	$1.00
Price Band A	3,900.00	1.00
Price Band B	3,900.00	1.00
Price Band C	3,900.00	1.00
– Primary or Expansion Central Office		
N-MSA	3,900.00	1.00
Price Band A	3,500.00	1.00
Price Band B	3,900.00	1.00
Price Band C	3,900.00	1.00
16 Channel Node		
– Primary Customer Premises		
N-MSA	$6,500.00	$1.00
Price Band A	6,500.00	1.00
Price Band B	6,500.00	1.00
Price Band C	6,500.00	1.00
– Primary Central Office		
N-MSA	6,500.00	1.00
Price Band A	6,500.00	1.00
Price Band B	6,500.00	1.00
Price Band C	6,500.00	1.00
– Expansion Customer Premises		
N-MSA	6,500.00	1.00
Price Band A	6,500.00	1.00
Price Band B	6,500.00	1.00
Price Band C	6,500.00	1.00
– Expansion Central Office		
N-MSA	6,500.00	1.00
Price Band A	6,500.00	1.00
Price Band B	6,500.00	1.00
Price Band C	6,500.00	1.00

Service availability limited. Refer to # footnote on Page 20-281.

© 2022 Frontier Communications Parent, Inc. All rights reserved

20. Ethernet Private Line (Cont'd)

20.1 Dedicated SONET Optical Transport Service (DSOTS) # (Cont'd)

(K) Rates and Charges (Cont'd)

(1) Nodes, per node (Cont'd)

(Jurisdiction: Illinois, (C)
Indiana, Michigan, North Carolina, Ohio, (C)
South Carolina, and Wisconsin) (C)

4.

	Category I# Monthly Rate	Initial Nonrecurring Charge
7-Year Term		
4 Channel Node		
– Primary or Expansion Customer Premises		
N-MSA	$3,480.00	$1.00
Price Band A	3,480.00	1.00
Price Band B	3,480.00	1.00
Price Band C	3,480.00	1.00
-- Primary or Expansion Central Office		
N-MSA	3,480.00	1.00
Price Band A	3,480.00	1.00
Price Band B	3,480.00	1.00
Price Band C	3,480.00	1.00
16 Channel Node		
– Primary Customer Premises		
N-MSA	$5,800.00	$1.00
Price Band A	5,800.00	1.00
Price Band B	5,800.00	1.00
Price Band C	5,800.00	1.00
– Primary Central Office		
N-MSA	5,800.00	1.00
Price Band A	5,800.00	1.00
Price Band B	5,800.00	1.00
Price Band C	5,800.00	1.00
– Expansion Customer Premises		
N-MSA	5,800.00	1.00
Price Band A	5,800.00	1.00
Price Band B	5,800.00	1.00
Price Band C	5,800.00	1.00
– Expansion Central Office		
N-MSA	5,800.00	1.00
Price Band A	5,800.00	1.00
Price Band B	5,800.00	1.00
Price Band C	5,800.00	1.00

Service availability limited. Refer to # footnote on Page 20-281.

© 2022 Frontier Communications Parent, Inc. All rights reserved

20. Ethernet Private Line (Cont'd)
20.1 Dedicated SONET Optical Transport Service (DSOTS) # #(Cont'd)
(K) Rates and Charges

(2) Nodes, per node

5. (Jurisdiction: Illinois, Indiana, Michigan, North Carolina, Ohio, South Carolina, and Wisconsin) (C) (C) (C)

	Category II# Monthly Rate	Initial Nonrecurring Charge
3-Year Term		
4 Channel Node		
– Primary or Expansion Customer Premises		
N-MSA	$8,000.00	$1.00
Price Band A	8,000.00	1.00
Price Band B	8,000.00	1.00
Price Band C	8,000.00	1.00
-- Primary or Expansion Central Office		
N-MSA	8,000.00	1.00
Price Band A	8,000.00	1.00
Price Band B	8,000.00	1.00
Price Band C	8,000.00	1.00
16 Channel Node		
– Primary Customer Premises		
N-MSA	$11,130.00	$1.00
Price Band A	11,130.00	1.00
Price Band B	11,130.00	1.00
Price Band C	11,130.00	1.00
– Primary Central Office		
N-MSA	11,130.00	1.00
Price Band A	11,130.00	1.00
Price Band B	11,130.00	1.00
Price Band C	11,130.00	1.00
– Expansion Customer Premises		
N-MSA	11,130.00	1.00
Price Band A	11,130.00	1.00
Price Band B	11,130.00	1.00
Price Band C	11,130.00	1.00
– Expansion Central Office		
N-MSA	11,130.00	1.00
Price Band A	11,130.00	1.00
Price Band B	11,130.00	1.00
Price Band C	11,130.00	1.00

Category II rates are not eligible for the discounts applied under Contract Tariff Options 5 or 9 as set forth in Section 21 following.

Service availability limited. Refer to # footnote on Page 20-281.

© 2022 Frontier Communications Parent, Inc. All rights reserved

20. Ethernet Private Line (Cont'd)
20.1 Dedicated SONET Optical Transport Service (DSOTS) # # (Cont'd)
(K) Rates and Charges (Cont'd)

(1) Nodes, per node (Cont'd)

6. (Jurisdiction: Illinois, Indiana, Michigan, North Carolina, Ohio, South Carolina, and Wisconsin) (C)

	Category II# Monthly Rate	Initial Nonrecurring Charge
5-Year Term		
4 Channel Node		
– Primary or Expansion Customer Premises		
N-MSA	$6,000.00	$1.00
Price Band A	6,000.00	1.00
Price Band B	6,000.00	1.00
Price Band C	6,000.00	1.00
– Primary or Expansion Central Office		
N-MSA	6,000.00	1.00
Price Band A	6,000.00	1.00
Price Band B	6,000.00	1.00
Price Band C	6,000.00	1.00
16 Channel Node		
– Primary Customer Premises		
N-MSA	$8,350.00	$1.00
Price Band A	8,350.00	1.00
Price Band B	8,350.00	1.00
Price Band C	8,350.00	1.00
– Primary Central Office		
N-MSA	8,350.00	1.00
Price Band A	8,350.00	1.00
Price Band B	8,350.00	1.00
Price Band C	8,350.00	1.00
– Expansion Customer Premises		
N-MSA	8,350.00	1.00
Price Band A	8,350.00	1.00
Price Band B	8,350.00	1.00
Price Band C	8,350.00	1.00
– Expansion Central Office		
N-MSA	8,350.00	1.00
Price Band A	8,350.00	1.00
Price Band B	8,350.00	1.00
Price Band C	8,350.00	1.00

Category II rates are not eligible for the discounts applied under Contract Tariff Options 5 or 9 as set forth in Section 21 following.

Service availability limited. Refer to # footnote on Page 20-281.

© 2022 Frontier Communications Parent, Inc. All rights reserved

20. Ethernet Private Line (Cont'd)
20.1 Dedicated SONET Optical Transport Service (DSOTS) # #(Cont'd)
(K) Rates and Charges (Cont'd)

(1) Nodes, per node (Cont'd)

7. (Jurisdiction: Illinois, Indiana, Michigan, North Carolina, Ohio, South Carolina, and Wisconsin) (C) (C) (C)

	Category II# Monthly Rate	Initial Nonrecurring Charge
7-Year Term		
4 Channel Node		
– Primary or Expansion Customer Premises		
N-MSA	$5,500.00	$1.00
Price Band A	5,500.00	1.00
Price Band B	5,500.00	1.00
Price Band C	5,500.00	1.00
-- Primary or Expansion Central Office		
N-MSA	5,500.00	1.00
Price Band A	5,500.00	1.00
Price Band B	5,500.00	1.00
Price Band C	5,500.00	1.00
16 Channel Node		
– Primary Customer Premises		
N-MSA	$8,250.00	$1.00
Price Band A	8,250.00	1.00
Price Band B	8,250.00	1.00
Price Band C	8,250.00	1.00
– Primary Central Office		
N-MSA	8,250.00	1.00
Price Band A	8,250.00	1.00
Price Band B	8,250.00	1.00
Price Band C	8,250.00	1.00
– Expansion Customer Premises		
N-MSA	8,250.00	1.00
Price Band A	8,250.00	1.00
Price Band B	8,250.00	1.00
Price Band C	8,250.00	1.00
– Expansion Central Office		
N-MSA	8,250.00	1.00
Price Band A	8,250.00	1.00
Price Band B	8,250.00	1.00

Category II rates are not eligible for the discounts applied under Contract Tariff Options 5 or 9 as set forth in Section 21 following.
Service availability limited. Refer to # footnote on Page 20-281.

© 2022 Frontier Communications Parent, Inc. All rights reserved

20. Ethernet Private Line (Cont'd)

20.1 Dedicated SONET Optical Transport Service (DSOTS) # (Cont'd)
(K) Rates and Charges (Cont'd)

(1) Nodes, per node (Cont'd)

8. (Jurisdiction: Illinois, (C)
Indiana, Michigan, North Carolina, Ohio, (C)
South Carolina, and Wisconsin) (C)

	Category I# Subsequent Nonrecurring Charge
Subsequent Installation or Augmentation, per 4 Channel or 16 Channel, Primary or Expansion Node	
N-MSA	$ 1,600.00
Price Band A	1,600.00
Price Band B	1,600.00
Price Band C	1,600.00
Upgrade to 16 Channel Primary or Expansion Node, per 4 Channel Primary or Expansion Node Upgraded	
N-MSA	20,000.00
Price Band A	20,000.00
Price Band B	20,000.00
Price Band C	20,000.00

6.

	Category II# Subsequent Nonrecurring Charge
Subsequent Installation or Augmentation, per 4 Channel or 16 Channel, Primary or Expansion Node	
N-MSA	$ 1,600.00
Price Band A	1,600.00
Price Band B	1,600.00
Price Band C	1,600.00
Upgrade to 16 Channel Primary or Expansion Node, per 4 Channel Primary or Expansion Node Upgraded	
N-MSA	20,000.00
Price Band A	20,000.00
Price Band B	20,000.00
Price Band C	20,000.00

Service availability limited. Refer to # footnote on Page 20-281.

© 2022 Frontier Communications Parent, Inc. All rights reserved

20. Ethernet Private Line (Cont'd)

20.1 Dedicated SONET Optical Transport Service (DSOTS) # (Cont'd)
(K) Rates and Charges (Cont'd)

(2) Ring Mileage, per mile

(C)
(Jurisdiction: Illinois, (C)
Indiana, Michigan, North Carolina, Ohio, (C)
South Carolina, and Wisconsin)

	Category I# Monthly Rate
3-Year Term	
N-MSA	
Mile 1 – 20	$1,100.00
Mile 21 and Over	520.00
Price Band A	
Mile 1 – 20	1,100.00
Mile 21 and Over	520.00
Price Band B	
Mile 1 – 20	1,100.00
Mile 21 and Over	520.00
Price Band C	
Mile 1 – 20	1,100.00
Mile 21 and Over	520.00

Service availability limited. Refer to # footnote on Page 20-281.

© 2022 Frontier Communications Parent, Inc. All rights reserved

20. Ethernet Private Line (Cont'd)

20.1 Dedicated SONET Optical Transport Service (DSOTS) # (Cont'd)

(K) Rates and Charges (Cont'd)

(Jurisdiction: Illinois, (C)
Indiana, Michigan, North Carolina, Ohio, (C)
South Carolina, and Wisconsin) (C)

(2) Ring Mileage, per mile (Cont'd)

	Category I# Monthly Rate
5-Year Term	
N-MSA	
Mile 1 – 20	$639.00
Mile 21 and Over	300.00
Price Band A	
Mile 1 – 20	639.00
Mile 21 and Over	300.00
Price Band B	
Mile 1 – 20	639.00
Mile 21 and Over	300.00
Price Band C	
Mile 1 – 20	639.00
Mile 21 and Over	300.00

	Category I# Monthly Rate
7-Year Term	
N-MSA	
7. Mile 1 – 20 $575.00	
Mile 21 and Over	270.00
Price Band A	
Mile 1 – 20	575.00
Mile 21 and Over	270.00
Price Band B	
Mile 1 – 20	575.00
Mile 21 and Over	270.00
Price Band C	
Mile 1 – 20	575.00
Mile 21 and Over	270.00

Service availability limited. Refer to # footnote on Page 20-281.

© 2022 Frontier Communications Parent, Inc. All rights reserved

20. Ethernet Private Line (Cont'd)

20.1 Dedicated SONET Optical Transport Service (DSOTS) # #(Cont'd)

(K) Rates and Charges (Cont'd)

(2) Ring Mileage, per mile (Cont'd)

(Jurisdiction: Illinois, (C)
Indiana, Michigan, North Carolina, Ohio, (C)
South Carolina, and Wisconsin) (C)

		Category II# Monthly Rate
3-Year Term		
N-MSA		
8.	Mile 1 – 20 $310.00	
Mile 21 and Over		310.00
Price Band A		
Mile 1 – 20		310.00
Mile 21 and Over		310.00
Price Band B		
Mile 1 – 20		310.00
Mile 21 and Over		310.00
Price Band C		
Mile 1 – 20		310.00
Mile 21 and Over		310.00

		Category II# Monthly Rate
5-Year Term		
N-MSA		
9.	Mile 1 – 20 $230.00	
Mile 21 and Over		230.00
Price Band A		
Mile 1 – 20		230.00
Mile 21 and Over		230.00
Price Band B		
Mile 1 – 20		230.00
Mile 21 and Over		230.00
Price Band C		
Mile 1 – 20		230.00
Mile 21 and Over		230.00

Category II rates are not eligible for the discounts applied under Contract Tariff Options 5 or 9 as set forth in Section 21 following.

Service availability limited. Refer to # footnote on Page 20-281.

© 2022 Frontier Communications Parent, Inc. All rights reserved

20. Ethernet Private Line (Cont'd)

20.1 Dedicated SONET Optical Transport Service (DSOTS) # #(Cont'd)

(K) Rates and Charges (Cont'd)

(2) Ring Mileage, per mile (Cont'd)

(Jurisdiction: Illinois, (C)
Indiana, Michigan, North Carolina, Ohio, (C)
South Carolina, and Wisconsin) (C)

	Category II# Monthly Rate
7-Year Term	
N-MSA	
Mile 1 – 20	$225.00
Mile 21 and Over	225.00
Price Band A	
Mile 1 – 20	225.00
Mile 21 and Over	225.00
Price Band B	
Mile 1 – 20	225.00
Mile 21 and Over	225.00
Price Band C	
Mile 1 – 20	225.00
Mile 21 and Over	225.00

Category II rates are not eligible for the discounts applied under Contract Tariff Options 5 or 9 as set forth in Section 21 following.

Service availability limited. Refer to # footnote on Page 20-281.

© 2022 Frontier Communications Parent, Inc. All rights reserved

20. Ethernet Private Line (Cont'd)

20.1 Dedicated SONET Optical Transport Service (DSOTS) # (Cont'd)

(K) Rates and Charges (Cont'd)

Service availability limited. Refer to # footnote on Page 20-281.

© 2022 Frontier Communications Parent, Inc. All rights reserved

20. Ethernet Private Line (Cont'd)

20.1 Dedicated SONET Optical Transport Service (DSOTS) # (Cont'd)

(K) Rates and Charges (Cont'd)

(3) Network Optimization, per amplification device

(Jurisdiction: Illinois, Indiana, Michigan, North Carolina, Ohio, South Carolina, and Wisconsin) (C) (C) (C)

	Category I Monthly Rate	Initial Nonrecurring Charge
At Node 3-Year Term		
N-MSA	$5,000.00	$1.00
Price Band A	5,000.00	1.00
Price Band B	5,000.00	1.00
Price Band C	5,000.00	1.00
At Node 5-Year Term		
N-MSA	2,650.00	1.00
Price Band A	2,650.00	1.00
Price Band B	2,650.00	1.00
Price Band C	2,650.00	1.00
At Node 7-Year Term		
N-MSA	2,400.00	1.00
Price Band A	2,400.00	1.00
Price Band B	2,400.00	1.00
Price Band C	2,400.00	1.00
Mid-span 3-Year Term		
N-MSA	5,400.00	1.00
Price Band A	5,400.00	1.00
Price Band B	5,400.00	1.00
Price Band C	5,400.00	1.00
Mid-span 5-Year Term		
N-MSA	2,800.00	1.00
Price Band A	2,800.00	1.00
Price Band B	2,800.00	1.00
Price Band C	2,800.00	1.00
Mid-span 7-year Term		
N-MSA	2,600.00	1.00
Price Band A	2,600.00	1.00
Price Band B	2,600.00	1.00
Price Band C	2,600.00	1.00

Service availability limited. Refer to # footnote on Page 20-281.

© 2022 Frontier Communications Parent, Inc. All rights reserved

20. Ethernet Private Line (Cont'd)

20.1 Dedicated SONET Optical Transport Service (DSOTS) # #(Cont'd)

(K) Rates and Charges (Cont'd)

(3) Network Optimization,
per amplification device (Cont'd)

(Jurisdiction: Illinois, (C)
Indiana, Michigan, North Carolina, Ohio, (C)
South Carolina, and Wisconsin) (C)

	Category II# Monthly Rate	Initial Nonrecurring Charge
Mid-span 3-Year Term		
N-MSA	$6,200.00	$1.00
Price Band A	6,200.00	1.00
Price Band B	6,200.00	1.00
Price Band C	6,200.00	1.00
Mid-span 5-Year Term		
N-MSA	4,650.00	1.00
Price Band A	4,650.00	1.00
Price Band B	4,650.00	1.00
Price Band C	4,650.00	1.00
Mid-span 7-year Term		
N-MSA	4,600.00	1.00
Price Band A	4,600.00	1.00
Price Band B	4,600.00	1.00
Price Band C	4,600.00	1.00

Category II rates are not eligible for the discounts applied under Contract Tariff Options 5 or 9 as set forth in Section 21 following.

Service availability limited. Refer to # footnote on Page 20-281.

© 2022 Frontier Communications Parent, Inc. All rights reserved

20. Ethernet Private Line (Cont'd)

20.1 Dedicated SONET Optical Transport Service (DSOTS) # (Cont'd)

(K) Rates and Charges (Cont'd)

(3) Network Optimization,
per amplification device

Service availability limited. Refer to # footnote on Page 20-281.

© 2022 Frontier Communications Parent, Inc. All rights reserved

20. Ethernet Private Line (Cont'd)

20.1 Dedicated SONET Optical Transport Service (DSOTS) # (Cont'd)

(K) Rates and Charges (Cont'd)

(3) Network Optimization,
per amplification device (Cont'd)

(Jurisdiction: Illinois, (C)
Indiana, Michigan, North Carolina, Ohio, (C)
South Carolina, and Wisconsin) (C)

Subsequent installation, per amplification device	Category I Nonrecurring Charge
N-MSA	$1,600.00
Price Band A	1,600.00
Price Band B	1,600.00
Price Band C	1,600.00

Subsequent installation, per amplification device	Category II Nonrecurring Charge
N-MSA	$1,600.00
Price Band A	1,600.00
Price Band B	1,600.00
Price Band C	1,600.00

Service availability limited. Refer to # footnote on Page 20-281.

© 2022 Frontier Communications Parent, Inc. All rights reserved

20. Ethernet Private Line (Cont'd)

20.1 Dedicated SONET Optical Transport Service (DSOTS) # (Cont'd)

(K) Rates and Charges (Cont'd)

(4) Point-to-Point Optical Transport Channels
Single Port Interface

(a) Monthly Rates

(Jurisdiction: Illinois, Indiana, Michigan, North Carolina, Ohio, South Carolina, and Wisconsin) (C)

Interface Type	Category I Monthly Rate (C) 3-Year Term
10. Unprotected SONET OC3/OC3c	
N-MSA	$ 850.00
Price Band A	850.00
Price Band B	850.00
Price Band C	850.00
Unprotected SONET OC12/OC12c	
N-MSA	1,400.00
Price Band A	1,400.00
Price Band B	1,400.00
Price Band C	1,400.00
Unprotected SONET OC48/OC48c	
N-MSA	3,450.00
Price Band A	3,450.00
Price Band B	3,450.00
Price Band C	3,450.00
Unprotected SONET OC192/OC192c	
N-MSA	5,800.00
Price Band A	5,800.00
Price Band B	5,800.00
Price Band C	5,800.00
Unprotected 1Gbps FICON	
N-MSA	3,450.00
Price Band A	3,450.00
Price Band B	3,450.00
Price Band C	3,450.00

* Concatenation not available on Switched interfaces.

Service availability limited. Refer to # footnote on Page 20-281.

© 2022 Frontier Communications Parent, Inc. All rights reserved

20. Ethernet Private Line (Cont'd)

20.1 Dedicated SONET Optical Transport Service # (Cont'd)

(K) Rates and Charges (Cont'd)

(4) Point-to-Point Optical Transport Channels
Single Port Interface (Cont'd)

(a) Monthly Rates (Cont'd)

(Jurisdiction: Illinois, Indiana, Michigan, North Carolina, Ohio, South Carolina, and Wisconsin) (C)

11.

Interface Type	Category I Monthly Rate (C) 3-Year Term
Unprotected 2 Gbps FICON	
N-MSA	$3,450.00
Price Band A	3,450.00
Price Band B	3,450.00
Price Band C	3,450.00
Unprotected Fiber Channel	
N-MSA	3,450.00
Price Band A	3,450.00
Price Band B	3,450.00
Price Band C	3,450.00
Unprotected 2Gbps Fiber Channel	
N-MSA	3,450.00
Price Band A	3,450.00
Price Band B	3,450.00
Price Band C	3,450.00

* Concatenation not available on Switched interfaces.

\# Service availability limited. Refer to # footnote on Page 20-281.

© 2022 Frontier Communications Parent, Inc. All rights reserved

20. Ethernet Private Line (Cont'd)

20.1 Dedicated SONET Optical Transport Service # (Cont'd)

(K) Rates and Charges (Cont'd)

(4) Point-to-Point Optical Transport Channels
Single Port Interface (Cont'd)

(a) Monthly Rates (Cont'd)

(Jurisdiction: Illinois, Indiana, Michigan, North Carolina, Ohio, South Carolina, and Wisconsin) (C)

Interface Type	Category I Monthly Rate 3-Year Term (C)
Unprotected ETR/CLO	
N-MSA	$3,450.00
Price Band A	3,450.00
Price Band B	3,450.00
Price Band C	3,450.00
Unprotected FDDI	
N-MSA	3,450.00
Price Band A	3,450.00
Price Band B	3,450.00
Price Band C	3,450.00
Unprotected 1.06 Gbps ISC	
N-MSA	3,450.00
Price Band A	3,450.00
Price Band B	3,450.00
Price Band C	3,450.00
Unprotected 2Gbps ISC3	
N-MSA	3,450.00
Price Band A	3,450.00
Price Band B	3,450.00
Price Band C	3,450.00
Unprotected Fast Ethernet	
N-MSA	3,450.00
Price Band A	3,450.00
Price Band B	3,450.00
Price Band C	3,450.00
Unprotected Gigabit Ethernet	
N-MSA	3,450.00
Price Band A	3,450.00
Price Band B	3,450.00
Price Band C	3,450.00
Unprotected 10 Gigabit Ethernet LAN-PHY/WAN-PHY	
N-MSA	5,800.00
Price Band A	5,800.00
Price Band B	5,800.00
Price Banc C	5,800.00

Service availability limited. Refer to # footnote on Page 20-281.

© 2022 Frontier Communications Parent, Inc. All rights reserved

20. Ethernet Private Line (Cont'd)

20.1 Dedicated SONET Optical Transport Service # (Cont'd)
(K) Rates and Charges (Cont'd)

(4) Point-to-Point Optical Transport Channels
Single Port Interface (Cont'd)

(a) Monthly Rates (Cont'd)

(Jurisdiction: Illinois, Indiana, Michigan, North Carolina, Ohio, South Carolina, and Wisconsin) (C)

Interface Type	Category I Monthly Rate (C) 3-Year Term
Unprotected D1 Video	
N-MSA	$3,450.00
12. Price Band A 3,450.00	
Price Band B	3,450.00
Price Band C	3,450.00
Protected SONET OC3/OC3c	
N-MSA	1,400.00
Price Band A	1,400.00
Price Band B	1,400.00
Price Band C	1,400.00
Protected SONET OC12/OC12c	
N-MSA	1,950.00
Price Band A	1,950.00
Price Band B	1,950.00
Price Band C	1,950.00
Protected SONET OC48/OC48c	
N-MSA	4,100.00
Price Band A	4,100.00
Price Band B	4,100.00
Price Band C	4,100.00
Protected SONET OC192/OC192c	
N-MSA	7,000.00
Price Band A	7,000.00
Price Band B	7,000.00
Price Band C	7,000.00
Unprotected 1Gbps FICON	
N-MSA	4,200.00
Price Band A	4,200.00
Price Band B	4,200.00
Price Band C	4,200.00

* Concatenation not available on Switched interfaces.
Service availability limited. Refer to # footnote on Page 20-281.

© 2022 Frontier Communications Parent, Inc. All rights reserved

20. Ethernet Private Line (Cont'd)
20.1 Dedicated SONET Optical Transport Service # (Cont'd)
(K) Rates and Charges (Cont'd)

(4) Point-to-Point Optical Transport Channels
Single Port Interface (Cont'd)

(a) Monthly Rates (Cont'd)

(Jurisdiction: Illinois, Indiana, Michigan, North Carolina, Ohio, South Carolina, and Wisconsin) (C)

Interface Type	Category I Monthly Rate (C) 3-Year Term
13. Protected 2 Gbps FICON	
N-MSA	$4,200.00
Price Band A	4,200.00
Price Band B	4,200.00
Price Band C	4,200.00
Protected Fiber Channel	
N-MSA	4,200.00
Price Band A	4,200.00
Price Band B	4,200.00
Price Band C	4,200.00
Protected 2Gbps Fiber Channel	
N-MSA	4,200.00
Price Band A	4,200.00
Price Band B	4,200.00
Price Band C	4,200.00
Protected FDDI	
N-MSA	4,200.00
Price Band A	4,200.00
Price Band B	4,200.00
Price Band C	4,200.00
Protected 1.06 Gbps ISC	
N-MSA	4,200.00
Price Band A	4,200.00
Price Band B	4,200.00
Price Band C	4,200.00
Protected 2Gbps ISC3	
N-MSA	4,200.00
Price Band A	4,200.00
Price Band B	4,200.00
Price Band C	4,200.00

Service availability limited. Refer to # footnote on Page 20-281.

© 2022 Frontier Communications Parent, Inc. All rights reserved

20. Ethernet Private Line (Cont'd)

20.1 Dedicated SONET Optical Transport Service #(Cont'd)

(K) Rates and Charges (Cont'd)

(4) Point-to-Point Optical Transport Channels
Single Port Interface (Cont'd)

(a) Monthly Rates (Cont'd)

(Jurisdiction: Illinois, Indiana, Michigan, North Carolina, Ohio, South Carolina, and Wisconsin) (C)

Interface Type	Category I Monthly Rate (C) 3-Year Term
Protected Fast Ethernet	
N-MSA	$4,200.00
Price Band A	4,200.00
Price Band B	4,200.00
14. Price Band C	4,200.00
Protected Gigabit Ethernet	
N-MSA	4,200.00
Price Band A	4,200.00
Price Band B	4,200.00
Price Band C	4,200.00
Protected 10 Gigabit Ethernet LAN-PHY/WAN-PHY	
N-MSA	7,000.00
Price Band A	7,000.00
Price Band B	7,000.00
Price Band C	7,000.00
Protected D1 Video	
N-MSA	4,200.00
Price Band A	4,200.00
Price Band B	4,200.00
Price Band C	4,200.00

Service availability limited. Refer to # footnote on Page 20-281.

© 2022 Frontier Communications Parent, Inc. All rights reserved

20. Ethernet Private Line (Cont'd)
20.1 Dedicated SONET Optical Transport Service # (Cont'd)
(K) Rates and Charges (Cont'd)
(4) Point-to-Point Optical Transport Channels
Single Port Interface (Cont'd)

(a) Monthly Rates (Cont'd)
15.

(Jurisdiction: Illinois, Indiana, Michigan, North Carolina, Ohio, South Carolina, and Wisconsin) (C)

Interface Type	Category I Monthly Rate (C) 5-Year Term
Unprotected SONET OC3/OC3c	
N-MSA	$ 450.00
Price Band A	450.00
Price Band B	450.00
Price Band C	450.00
Unprotected SONET OC12/OC12c	
N-MSA	725.00
Price Band A	725.00
Price Band B	725.00
Price Band C	725.00
Unprotected SONET OC48/OC48c	
N-MSA	1,870.00
Price Band A	1,870.00
Price Band B	1,870.00
Price Band C	1,870.00
Unprotected SONET OC192/OC192c	
N-MSA	4,100.00
Price Band A	4,100.00
Price Band B	4,100.00
Price Band C	4,100.00
Unprotected 1Gbps FICON	
N-MSA	1,800.00
Price Band A	1,800.00
Price Band B	1,800.00
Price Band C	1,800.00
Unprotected 2 Gbps FICON	
N-MSA	1,900.00
Price Band A	1,900.00
Price Band B	1,900.00
Price Band C	1,900.00

* Concatenation not available on Switched interfaces.
\# Service availability limited. Refer to # footnote on Page 20-281.

© 2022 Frontier Communications Parent, Inc. All rights reserved

20. Ethernet Private Line (Cont'd)

20.1 Dedicated SONET Optical Transport Service # (Cont'd)

(K) Rates and Charges (Cont'd)

(4) Point-to-Point Optical Transport Channels
Single Port Interface (Cont'd)

(a) Monthly Rates (Cont'd)

(Jurisdiction: Illinois, Indiana, Michigan, North Carolina, Ohio, South Carolina, and Wisconsin) (C)

Interface Type	Category I Monthly Rate (C)	5-Year Term
Unprotected Fiber Channel		
16.	N-MSA $1,800.00	
Price Band A		1,800.00
Price Band B		1,800.00
Price Band C		1,800.00
Unprotected 2 Gbps Fiber Channel		
N-MSA		1,900.00
Price Band A		1,900.00
Price Band B		1,900.00
Price Band C		1,900.00
Unprotected ETR/CLO		
N-MSA		1,800.00
Price Band A		1,800.00
Price Band B		1,800.00
Price Band C		1,800.00
Unprotected FDDI		
N-MSA		1,800.00
Price Band A		1,800.00
Price Band B		1,800.00
Price Band C		1,800.00
Unprotected 1.06 Gbps ISC		
N-MSA		1,800.00
Price Band A		1,800.00
Price Band B		1,800.00
Price Band C		1,800.00

Service availability limited. Refer to # footnote on Page 20-281.

© 2022 Frontier Communications Parent, Inc. All rights reserved

20. Ethernet Private Line (Cont'd)

20.1 Dedicated SONET Optical Transport Service # (Cont'd)

(K) Rates and Charges (Cont'd)

(4) Point-to-Point Optical Transport Channels
Single Port Interface (Cont'd)

(a) Monthly Rates (Cont'd)

(Jurisdiction: Illinois, Indiana, Michigan, North Carolina, Ohio, South Carolina, and Wisconsin) (C)

Interface Type	Category I Monthly Rate (C)
Unprotected 2Gbps ISC3	
N-MSA	$1,900.00
17. Price Band A 1,900.00	
Price Band B	1,900.00
Price Band C	1,900.00
Unprotected Fast Ethernet	
N-MSA	1,800.00
Price Band A	1,800.00
Price Band B	1,800.00
Price Band C	1,800.00
Unprotected Gigabit Ethernet	
N-MSA	1,800.00
Price Band A	1,800.00
Price Band B	1,800.00
Price Band C	1,800.00
Unprotected 10 Gigabit Ethernet LAN-PHY/WAN-PHY	
N-MSA	4,100.00
Price Band A	4,100.00
Price Band B	4,100.00
Price Band C	4,100.00
Unprotected D1 Video	
N-MSA	1,800.00
Price Band A	1,800.00
Price Band B	1,800.00
Price Band C	1,800.00

Service availability limited. Refer to # footnote on Page 20-281.

© 2022 Frontier Communications Parent, Inc. All rights reserved

20. Ethernet Private Line (Cont'd)

20.1 Dedicated SONET Optical Transport Service # (Cont'd)

(K) Rates and Charges (Cont'd)

(4) Point-to-Point Optical Transport Channels
Single Port Interface (Cont'd)

(a) Monthly Rates (Cont'd)

(Jurisdiction: Illinois, Indiana, Michigan, North Carolina, Ohio, South Carolina, and Wisconsin) (C)

18.

Interface Type	Category I Monthly Rate (C) 5-Year Term
Protected SONET OC3/OC3c	
N-MSA	$ 725.00
Price Band A	725.00
Price Band B	725.00
Price Band C	725.00
Protected SONET OC12/OC12c	
N-MSA	1,000.00
Price Band A	1,000.00
Price Band B	1,000.00
Price Band C	1,000.00
Protected SONET OC48/OC48c	
N-MSA	2,150.00
Price Band A	2,150.00
Price Band B	2,150.00
Price Band C	2,150.00
Protected SONET OC192/OC192c	
N-MSA	5,600.00
Price Band A	5,600.00
Price Band B	5,600.00
Price Band C	5,600.00
Protected 1Gbps FICON	
N-MSA	2,200.00
Price Band A	2,200.00
Price Band B	2,200.00
Price Band C	2,200.00

* Concatenation not available on Switched interfaces.

\# Service availability limited. Refer to # footnote on Page 20-281.

© 2022 Frontier Communications Parent, Inc. All rights reserved

20. Ethernet Private Line (Cont'd)

20.1 Dedicated SONET Optical Transport Service # (Cont'd)

(K) Rates and Charges (Cont'd)

(4) Point-to-Point Optical Transport Channels
Single Port Interface (Cont'd)

(a) Monthly Rates (Cont'd)

(Jurisdiction: Illinois, Indiana, Michigan, North Carolina, Ohio, South Carolina, and Wisconsin) (C)

Interface Type	Category I Monthly Rate (C) 5-Year Term
Protected 2 Gbps FICON	
N-MSA	$2,300.00
Price Band A	2,300.00
Price Band B	2,300.00
Price Band C	2,300.00
Protected Fiber Channel	
N-MSA	2,200.00
Price Band A	2,200.00
Price Band B	2,200.00
Price Band C	2,200.00
Protected 2 Gbps Fiber Channel	
N-MSA	2,300.00
Price Band A	2,300.00
Price Band B	2,300.00
Price Band C	2,300.00

Service availability limited. Refer to # footnote on Page 20-281.

© 2022 Frontier Communications Parent, Inc. All rights reserved

20. Ethernet Private Line (Cont'd)
20.1 Dedicated SONET Optical Transport Service # (Cont'd)
(K) Rates and Charges (Cont'd)
(4) Point-to-Point Optical Transport Channels
Single Port Interface (Cont'd)

(a) Monthly Rates (Cont'd)

(C)
(Jurisdiction: Illinois, (C)
Indiana, Michigan, North Carolina, Ohio, Category I (C)
South Carolina, and Wisconsin) Monthly Rate

Interface Type	5-Year Term
Protected FDDI	
N-MSA	$2,200.00
19. Price Band A 2,200.00	
Price Band B	2,200.00
Price Band C	2,200.00
Protected 1.06 Gbps ISC	
N-MSA	2,200.00
Price Band A	2,200.00
Price Band B	2,200.00
Price Band C	2,200.00
Protected 2Gbps ISC3	
N-MSA	2,300.00
Price Band A	2,300.00
Price Band B	2,300.00
Price Band C	2,300.00
Protected Fast Ethernet	
N-MSA	2,200.00
Price Band A	2,200.00
Price Band B	2,200.00
Price Band C	2,200.00
Protected Gigabit Ethernet	
N-MSA	2,200.00
Price Band A	2,200.00
Price Band B	2,200.00
Price Band C	2,200.00
Protected 10 Gigabit Ethernet LAN-PHY/WAN-PHY	
N-MSA	5,600.00
Price Band A	5,600.00
Price Band B	5,600.00
Price Band C	5,600.00
Protected D1 Video	
N-MSA	2,200.00
Price Band A	2,200.00
Price Band B	2,200.00
Price Band C	2,200.00

Service availability limited. Refer to # footnote on Page 20-281.

© 2022 Frontier Communications Parent, Inc. All rights reserved

20. Ethernet Private Line (Cont'd)

20.1 Dedicated SONET Optical Transport Service # (Cont'd)

(K) Rates and Charges (Cont'd)

(4) Point-to-Point Optical Transport Channels
Single-Port Interface (Cont'd)

(a) Monthly Rates (Cont'd)

(Jurisdiction: Illinois, Indiana, Michigan, North Carolina, Ohio, South Carolina, and Wisconsin) (C)

Interface Type	Category I Monthly Rate (C) 7 -Year Term
Unprotected SONET OC3/OC3c	
N-MSA	$ 400.00
Price Band A	400.00
20. Price Band B 400.00	
Price Band C	400.00
Unprotected SONET OC12/OC12c	
N-MSA	650.00
Price Band A	650.00
Price Band B	650.00
Price Band C	650.00
Unprotected SONET OC48/OC48c	
N-MSA	1,625.00
Price Band A	1,625.00
Price Band B	1,625.00
Price Band C	1,625.00
Unprotected SONET OC192/OC192c	
N-MSA	3,250.00
Price Band A	3,250.00
Price Band B	3,250.00
Price Band C	3,250.00
Unprotected 1Gbps FICON	
N-MSA	1,600.00
Price Band A	1,600.00
Price Band B	1,600.00
Price Band C	1,600.00

* Concatenation not available on Switched interfaces.

\# Service availability limited. Refer to # footnote on Page 20-281.

© 2022 Frontier Communications Parent, Inc. All rights reserved

20. Ethernet Private Line (Cont'd)

20.1 Dedicated SONET Optical Transport Service # (Cont'd)

(K) Rates and Charges (Cont'd)

(4) Point-to-Point Optical Transport Channels Single-Port Interface (Cont'd)

(a) Monthly Rates (Cont'd)

(Jurisdiction: Illinois, Indiana, Michigan, North Carolina, Ohio, South Carolina, and Wisconsin) (C)

Interface Type	Category I Monthly Rate (C) 7 -Year Term
Unprotected 2 Gbps FICON	
N-MSA	$1,600.00
Price Band A	1,600.00
Price Band B	1,600.00
Price Band C	1,600.00
Unprotected Fiber Channel	
N-MSA	1,600.00
Price Band A	1,600.00
Price Band B	1,600.00
Price Band C	1,600.00
Unprotected 2 Gbps Fiber Channel	
N-MSA	1,600.00
Price Band A	1,600.00
Price Band B	1,600.00
Price Band C	1,600.00
Unprotected ETR/CLO	
N-MSA	1,600.00
Price Band A	1,600.00
Price Band B	1,600.00
Price Band C	1,600.00
Unprotected FDDI	
N-MSA	1,600.00
Price Band A	1,600.00
Price Band B	1,600.00
Price Band C	1,600.00

Service availability limited. Refer to # footnote on Page 20-281.

© 2022 Frontier Communications Parent, Inc. All rights reserved

20. Ethernet Private Line (Cont'd)
20.1 Dedicated SONET Optical Transport Service # (Cont'd)
(K) Rates and Charges (Cont'd)

(4) Point-to-Point Optical Transport Channels
Single-Port Interface (Cont'd)

(a) Monthly Rates (Cont'd)

(Jurisdiction: Illinois, Indiana, Michigan, North Carolina, Ohio, South Carolina, and Wisconsin) (C)

Interface Type	Category I Monthly Rate (C) 7 -Year Term
Unprotected 1.06 Gbps ISC	
N-MSA	$1,600.00
21. Price Band A 1,600.00	
Price Band B	1,600.00
Price Band C	1,600.00
Unprotected 2Gbps ISC3	
N-MSA	1,600.00
Price Band A	1,600.00
Price Band B	1,600.00
Price Band C	1,600.00
Unprotected Fast Ethernet	
N-MSA	1,600.00
Price Band A	1,600.00
Price Band B	1,600.00
Price Band C	1,600.00
Unprotected Gigabit Ethernet	
N-MSA	1,600.00
Price Band A	1,600.00
Price Band B	1,600.00
Price Band C	1,600.00
Unprotected 10 Gigabit Ethernet LAN-PHY/WAN-PHY	
N-MSA	3,250.00
Price Band A	3,250.00
Price Band B	3,250.00
Price Band C	3,250.00
Unprotected D1 Video	
N-MSA	1,600.00
Price Band A	1,600.00
Price Band B	1,600.00
Price Band C	1,600.00

Service availability limited. Refer to # footnote on Page 20-281.

© 2022 Frontier Communications Parent, Inc. All rights reserved

20. Ethernet Private Line (Cont'd)

20.1 Dedicated SONET Optical Transport Service # (Cont'd)
(K) Rates and Charges (Cont'd)

(4) Point-to-Point Optical Transport Channels
Single-Port Interface (Cont'd)

(a) Monthly Rates (Cont'd)

(C)
(Jurisdiction: Illinois, (C)
Indiana, Michigan, North Carolina, Ohio, Category I (C)
South Carolina, and Wisconsin) Monthly Rate

Interface Type	7 -Year Term
Protected SONET OC3/OC3c	
22. N-MSA	$ 650.00
Price Band A	650.00
Price Band B	650.00
Price Band C	650.00
Protected SONET OC12/OC12c	
N-MSA	900.00
Price Band A	900.00
Price Band B	900.00
Price Band C	900.00
Protected SONET OC48/OC48c	
N-MSA	1,925.00
Price Band A	1,925.00
Price Band B	1,925.00
Price Band C	1,925.00
Protected SONET OC192/OC192c	
N-MSA	4,750.00
Price Band A	4,750.00
Price Band B	4,750.00
Price Band C	4,750.00
Protected 1Gbps FICON	
N-MSA	1,950.00
Price Band A	1,950.00
Price Band B	1,950.00
Price Band C	1,950.00
Protected 2 Gbps FICON	
N-MSA	1,950.00
Price Band A	1,950.00
Price Band B	1,950.00
Price Band C	1,950.00

* Concatenation not available on Switched interfaces.
\# Service availability limited. Refer to # footnote on Page 20-281.

© 2022 Frontier Communications Parent, Inc. All rights reserved

20. Ethernet Private Line (Cont'd)

20.1 Dedicated SONET Optical Transport Service # (Cont'd)

(K) Rates and Charges (Cont'd)

(4) Point-to-Point Optical Transport Channels
Single-Port Interface (Cont'd)

(a) Monthly Rates (Cont'd)

(Jurisdiction: Illinois, Indiana, Michigan, North Carolina, Ohio, South Carolina, and Wisconsin) (C)

Interface Type	Category I Monthly Rate (C) 7 -Year Term
23. Protected Fiber Channel	
N-MSA	$1,950.00
Price Band A	1,950.00
Price Band B	1,950.00
Price Band C	1,950.00
Protected 2 Gbps Fiber Channel	
N-MSA	1,950.00
Price Band A	1,950.00
Price Band B	1,950.00
Price Band C	1,950.00
Protected FDDI	
N-MSA	1,950.00
Price Band A	1,950.00
Price Band B	1,950.00
Price Band C	1,950.00
Protected 1.06 Gbps ISC	
N-MSA	1,950.00
Price Band A	1,950.00
Price Band B	1,950.00
Price Band C	1,950.00
Protected 2Gbps ISC3	
N-MSA	1,950.00
Price Band A	1,950.00
Price Band B	1,950.00
Price Band C	1,950.00

Service availability limited. Refer to # footnote on Page 20-281.

© 2022 Frontier Communications Parent, Inc. All rights reserved

20. Ethernet Private Line (Cont'd)

20.1 Dedicated SONET Optical Transport Service # (Cont'd)

(K) Rates and Charges (Cont'd)

(4) Point-to-Point Optical Transport Channels Single-Port Interface (Cont'd)

(a) Monthly Rates (Cont'd)

(Jurisdiction: Illinois, Indiana, Michigan, North Carolina, Ohio, South Carolina, and Wisconsin) (C)

Interface Type	Category I Monthly Rate (C) 7 -Year Term
Protected Fast Ethernet	
N-MSA	$1,950.00
Price Band A	1,950.00
Price Band B	1,950.00
Price Band C	1,950.00
Protected Gigabit Ethernet	
N-MSA	1,950.00
Price Band A	1,950.00
Price Band B	1,950.00
Price Band C	1,950.00
Protected 10 Gigabit Ethernet LAN-PHY/WAN-PHY	
N-MSA	4,750.00
Price Band A	4,750.00
Price Band B	4,750.00
Price Band C	4,750.00
Protected D1 Video	
N-MSA	1,950.00
Price Band A	1,950.00
Price Band B	1,950.00
Price Band C	1,950.00

Service availability limited. Refer to # footnote on Page 20-281.

© 2022 Frontier Communications Parent, Inc. All rights reserved

20. Ethernet Private Line (Cont'd)

20.1 Dedicated SONET Optical Transport Service # # (Cont'd)

(K) Rates and Charges (Cont'd)

(4) Point-to-Point Optical Transport Channels
Single Port Interface

(a) Monthly Rates

(C)
(Jurisdiction: Illinois, (C)
Indiana, Michigan, North Carolina, Ohio, Category II# (C)
South Carolina, and Wisconsin) Monthly Rate

Interface Type	3-Year Term
24. Unprotected SONET OC3/OC3c	
N-MSA	$ 1,270.00
Price Band A	1,270.00
Price Band B	1,270.00
Price Band C	1,270.00
Unprotected SONET OC12/OC12c	
N-MSA	1,400.00
Price Band A	1,400.00
Price Band B	1,400.00
Price Band C	1,400.00
Unprotected SONET OC48/OC48c	
N-MSA	2,130.00
Price Band A	2,130.00
Price Band B	2,130.00
Price Band C	2,130.00
Unprotected SONET OC192/OC192c	
N-MSA	7,330.00
Price Band A	7,330.00
Price Band B	7,330.00
Price Band C	7,330.00
Unprotected 1Gbps FICON	
N-MSA	2,400.00
Price Band A	2,400.00
Price Band B	2,400.00
Price Band C	2,400.00

* Concatenation not available on Switched interfaces.
\# Category II rates are not eligible for the discounts applied under Contract Tariff Options 5 or 9 as set forth in Section 21 following.
\# \# Service availability limited. Refer to # footnote on Page 20-281.

© 2022 Frontier Communications Parent, Inc. All rights reserved

20. Ethernet Private Line (Cont'd)

20.1 Dedicated SONET Optical Transport Service # # (Cont'd)

(K) Rates and Charges (Cont'd)

(4) Point-to-Point Optical Transport Channels
Single Port Interface (Cont'd)

(a) Monthly Rates (Cont'd)

(Jurisdiction: Illinois, Indiana, Michigan, North Carolina, Ohio, South Carolina, and Wisconsin) (C)

Interface Type	Category II# Monthly Rate (C) 3-Year Term
Unprotected 2 Gbps FICON	
N-MSA	$2,400.00
Price Band A	2,400.00
Price Band B	2,400.00
Price Band C	2,400.00
Unprotected Fiber Channel	
N-MSA	2,400.00
Price Band A	2,400.00
Price Band B	2,400.00
Price Band C	2,400.00
Unprotected 2Gbps Fiber Channel	
N-MSA	2,400.00
Price Band A	2,400.00
Price Band B	2,400.00
Price Band C	2,400.00
Unprotected ETR/CLO	
N-MSA	2,400.00
Price Band A	2,400.00
Price Band B	2,400.00
Price Band C	2,400.00
Unprotected FDDI	
N-MSA	2,400.00
Price Band A	2,400.00
Price Band B	2,400.00
Price Band C	2,400.00

Category II rates are not eligible for the discounts applied under Contract Tariff Options 5 or 9 as set forth in Section 21 following.

Service availability limited. Refer to # footnote on Page 20-281.

© 2022 Frontier Communications Parent, Inc. All rights reserved

20. Ethernet Private Line (Cont'd)

20.1 Dedicated SONET Optical Transport Service # # (Cont'd)

(K) Rates and Charges (Cont'd)

(4) Point-to-Point Optical Transport Channels
Single Port Interface (Cont'd)

(a) Monthly Rates (Cont'd)

(Jurisdiction: Illinois, Indiana, Michigan, North Carolina, Ohio, South Carolina, and Wisconsin) (C)

Interface Type	Category II# Monthly Rate 3-Year Term (C)
Unprotected 1.06 Gbps ISC	
N-MSA	$2,400.00
Price Band A	2,400.00
Price Band B	2,400.00
Price Band C	2,400.00
Unprotected 2Gbps ISC3	
N-MSA	2,400.00
Price Band A	2,400.00
Price Band B	2,400.00
Price Band C	2,400.00
Unprotected Fast Ethernet	
N-MSA	2,400.00
Price Band A	2,400.00
Price Band B	2,400.00
Price Band C	2,400.00
Unprotected Gigabit Ethernet	
N-MSA	2,400.00
Price Band A	2,400.00
Price Band B	2,400.00
Price Band C	2,400.00
Unprotected 10 Gigabit Ethernet LAN-PHY/WAN-PHY	
N-MSA	7,330.00
Price Band A	7,330.00
Price Band B	7,330.00
Price Banc C	7,330.00

Category II rates are not eligible for the discounts applied under Contract Tariff Options 5 or 9 as set forth in Section 21 following.

Service availability limited. Refer to # footnote on Page 20-281.

© 2022 Frontier Communications Parent, Inc. All rights reserved

20. Ethernet Private Line (Cont'd)
20.1 Dedicated SONET Optical Transport Service # # (Cont'd)
(K) Rates and Charges (Cont'd)
(4) Point-to-Point Optical Transport Channels
Single Port Interface (Cont'd)
(a) Monthly Rates (Cont'd)

(C)
(Jurisdiction: Illinois, (C)
Indiana, Michigan, North Carolina, Ohio, Category II# (C)
South Carolina, and Wisconsin) Monthly Rate

Interface Type	3-Year Term
Unprotected D1 Video	
N-MSA	$2,400.00
Price Band A	2,400.00
Price Band B	2,400.00
Price Band C	2,400.00
Protected SONET OC3/OC3c	
N-MSA	1,600.00
Price Band A	1,600.00
Price Band B	1,600.00
Price Band C	1,600.00
Protected SONET OC12/OC12c	
N-MSA	2,470.00
Price Band A	2,470.00
Price Band B	2,470.00
Price Band C	2,470.00
Protected SONET OC48/OC48c	
N-MSA	3,330.00
Price Band A	3,330.00
Price Band B	3,330.00
Price Band C	3,330.00
Protected SONET OC192/OC192c	
N-MSA	14,530.00
Price Band A	14,530.00
Price Band B	14,530.00
Price Band C	14,530.00
Protected 1Gbps FICON	
N-MSA	2,930.00
Price Band A	2,930.00
Price Band B	2,930.00
Price Band C	2,930.00

* Concatenation not available on Switched interfaces.
\# Category II rates are not eligible for the discounts applied under Contract Tariff Options 5 or 9 as set forth in Section 21 following.
\# \# Service availability limited. Refer to # footnote on Page 20-281.

© 2022 Frontier Communications Parent, Inc. All rights reserved

20. Ethernet Private Line (Cont'd)
    20.1 Dedicated SONET Optical Transport Service # # (Cont'd)
        (K) Rates and Charges (Cont'd)
            (4) Point-to-Point Optical Transport Channels
                Single Port Interface (Cont'd)

                (a) Monthly Rates (Cont'd)

(Jurisdiction: Illinois, Indiana, Michigan, North Carolina, Ohio, South Carolina, and Wisconsin) (C)

Interface Type	Category II# Monthly Rate (C) 3-Year Term
Protected 2 Gbps FICON	
N-MSA	$4,070.00
Price Band A	4,070.00
Price Band B	4,070.00
Price Band C	4,070.00
Protected Fiber Channel	
N-MSA	2,930.00
Price Band A	2,930.00
Price Band B	2,930.00
Price Band C	2,930.00
Protected 2Gbps Fiber Channel	
N-MSA	4,070.00
Price Band A	4,070.00
Price Band B	4,070.00
Price Band C	4,070.00
Protected FDDI	
N-MSA	2,930.00
Price Band A	2,930.00
Price Band B	2,930.00
Price Band C	2,930.00
Protected 1.06 Gbps ISC	
N-MSA	4,070.00
Price Band A	4,070.00
Price Band B	4,070.00
Price Band C	4,070.00
Protected 2Gbps ISC3	
N-MSA	4,070.00
Price Band A	4,070.00
Price Band B	4,070.00
Price Band C	4,070.00

Category II rates are not eligible for the discounts applied under Contract Tariff Options 5 or 9 as set forth in Section 21 following.

Service availability limited. Refer to # footnote on Page 20-281.

© 2022 Frontier Communications Parent, Inc. All rights reserved

20. Ethernet Private Line (Cont'd)

20.1 Dedicated SONET Optical Transport Service # # (Cont'd)

(K) Rates and Charges (Cont'd)

(4) Point-to-Point Optical Transport Channels
Single Port Interface (Cont'd)

(a) Monthly Rates (Cont'd)

(Jurisdiction: , Illinois, Indiana, Michigan, North Carolina, Ohio, South Carolina, and Wisconsin) (C)

Interface Type	Category II# Monthly Rate (C) 3-Year Term
Protected Fast Ethernet	
N-MSA	$2,930.00
Price Band A	2,930.00
Price Band B	2,930.00
Price Band C	2,930.00
Protected Gigabit Ethernet	
N-MSA	2,930.00
Price Band A	2,930.00
Price Band B	2,930.00
Price Band C	2,930.00
Protected 10 Gigabit Ethernet LAN-PHY/WAN-PHY	
N-MSA	14,530.00
Price Band A	14,530.00
Price Band B	14,530.00
Price Band C	14,530.00
Protected D1 Video	
N-MSA	2,930.00
Price Band A	2,930.00
Price Band B	2,930.00
Price Band C	2,930.00

Category II rates are not eligible for the discounts applied under Contract Tariff Options 5 or 9 as set forth in Section 21 following.

Service availability limited. Refer to # footnote on Page 20-281.

© 2022 Frontier Communications Parent, Inc. All rights reserved

20. Ethernet Private Line (Cont'd)
20.1 Dedicated SONET Optical Transport Service # # (Cont'd)
(K) Rates and Charges (Cont'd)
(4) Point-to-Point Optical Transport Channels
Single Port Interface (Cont'd)

(a) Monthly Rates (Cont'd)

(Jurisdiction: Illinois, Indiana, Michigan, North Carolina, Ohio, South Carolina, and Wisconsin) (C)

Interface Type	Category II# Monthly Rate (C) 5-Year Term
Unprotected SONET OC3/OC3c	
N-MSA	$ 950.00
Price Band A	950.00
Price Band B	950.00
Price Band C	950.00
Unprotected SONET OC12/OC12c	
N-MSA	1,050.00
Price Band A	1,050.00
Price Band B	1,050.00
Price Band C	1,050.00
Unprotected SONET OC48/OC48c	
N-MSA	1,600.00
Price Band A	1,600.00
Price Band B	1,600.00
Price Band C	1,600.00
Unprotected SONET OC192/OC192c	
N-MSA	5,500.00
Price Band A	5,500.00
Price Band B	5,500.00
Price Band C	5,500.00
Unprotected 1Gbps FICON	
N-MSA	1,800.00
Price Band A	1,800.00
Price Band B	1,800.00
Price Band C	1,800.00
Unprotected 2 Gbps FICON	
N-MSA	1,800.00
Price Band A	1,800.00
Price Band B	1,800.00
Price Band C	1,800.00

* Concatenation not available on Switched interfaces.
\# Category II rates are not eligible for the discounts applied under Contract Tariff Options 5 or 9 as set forth in Section 21 following.
\# \# Service availability limited. Refer to # footnote on Page 20-281.

© 2022 Frontier Communications Parent, Inc. All rights reserved

20. Ethernet Private Line (Cont'd)

20.1 Dedicated SONET Optical Transport Service # # (Cont'd)

(K) Rates and Charges (Cont'd)

(4) Point-to-Point Optical Transport Channels
Single Port Interface (Cont'd)

(a) Monthly Rates (Cont'd)

(Jurisdiction: Illinois, Indiana, Michigan, North Carolina, Ohio, South Carolina, and Wisconsin) (C)

Interface Type	Category II# Monthly Rate (C) 5-Year Term
Unprotected Fiber Channel	
N-MSA	$1,800.00
Price Band A	1,800.00
Price Band B	1,800.00
Price Band C	1,800.00
Unprotected 2 Gbps Fiber Channel	
N-MSA	1,800.00
Price Band A	1,800.00
Price Band B	1,800.00
Price Band C	1,800.00
Unprotected ETR/CLO	
N-MSA	1,800.00
Price Band A	1,800.00
Price Band B	1,800.00
Price Band C	1,800.00
Unprotected FDDI	
N-MSA	1,800.00
Price Band A	1,800.00
Price Band B	1,800.00
Price Band C	1,800.00
Unprotected 1.06 Gbps ISC	
N-MSA	1,800.00
Price Band A	1,800.00
Price Band B	1,800.00
Price Band C	1,800.00

Category II rates are not eligible for the discounts applied under Contract Tariff Options 5 or 9 as set forth in Section 21 following.

Service availability limited. Refer to # footnote on Page 20-281.

© 2022 Frontier Communications Parent, Inc. All rights reserved

20. Ethernet Private Line (Cont'd)

20.1 Dedicated SONET Optical Transport Service # # (Cont'd)

(K) Rates and Charges (Cont'd)

(4) Point-to-Point Optical Transport Channels
Single Port Interface (Cont'd)

(a) Monthly Rates (Cont'd)

(Jurisdiction: Illinois, Indiana, Michigan, North Carolina, Ohio, South Carolina, and Wisconsin) (C)

Interface Type	Category II# Monthly Rate (C) 5-Year Term
Unprotected 2Gbps ISC3	
N-MSA	$1,800.00
Price Band A	1,800.00
Price Band B	1,800.00
Price Band C	1,800.00
Unprotected Fast Ethernet	
N-MSA	1,800.00
Price Band A	1,800.00
Price Band B	1,800.00
Price Band C	1,800.00
Unprotected Gigabit Ethernet	
N-MSA	1,800.00
Price Band A	1,800.00
Price Band B	1,800.00
Price Band C	1,800.00
Unprotected 10 Gigabit Ethernet LAN-PHY/WAN-PHY	
N-MSA	5,500.00
Price Band A	5,500.00
Price Band B	5,500.00
Price Band C	5,500.00
Unprotected D1 Video	
N-MSA	1,800.00
Price Band A	1,800.00
Price Band B	1,800.00
Price Band C	1,800.00

Category II rates are not eligible for the discounts applied under Contract Tariff Options 5 or 9 as set forth in Section 21 following.

Service availability limited. Refer to # footnote on Page 20-281.

© 2022 Frontier Communications Parent, Inc. All rights reserved

20. Ethernet Private Line (Cont'd)

20.1 Dedicated SONET Optical Transport Service # # (Cont'd)

(K) Rates and Charges (Cont'd)

(4) Point-to-Point Optical Transport Channels
Single Port Interface (Cont'd)

(a) Monthly Rates (Cont'd)

(Jurisdiction: Illinois, Indiana, Michigan, North Carolina, Ohio, South Carolina, and Wisconsin) (C) (C) (C)

Interface Type	Category II# Monthly Rate 5-Year Term
Protected SONET OC3/OC3c	
N-MSA	$1,200.00
Price Band A	1,200.00
Price Band B	1,200.00
Price Band C	1,200.00
Protected SONET OC12/OC12c	
N-MSA	1,850.00
Price Band A	1,850.00
Price Band B	1,850.00
Price Band C	1,850.00
Protected SONET OC48/OC48c	
N-MSA	2,500.00
Price Band A	2,500.00
Price Band B	2,500.00
Price Band C	2,500.00
Protected SONET OC192/OC192c	
N-MSA	10,900.00
Price Band A	10,900.00
Price Band B	10,900.00
Price Band C	10,900.00
Protected 1Gbps FICON	
N-MSA	2,200.00
Price Band A	2,200.00
Price Band B	2,200.00
Price Band C	2,200.00

* Concatenation not available on Switched interfaces.
\# Category II rates are not eligible for the discounts applied under Contract Tariff Options 5 or 9 as set forth in Section 21 following.
\# \# Service availability limited. Refer to # footnote on Page 20-281.

© 2022 Frontier Communications Parent, Inc. All rights reserved

20. Ethernet Private Line (Cont'd)

20.1 Dedicated SONET Optical Transport Service # # (Cont'd)

(K) Rates and Charges (Cont'd)

(4) Point-to-Point Optical Transport Channels
Single Port Interface (Cont'd)

(a) Monthly Rates (Cont'd)

(Jurisdiction: Illinois, Indiana, Michigan, North Carolina, Ohio, South Carolina, and Wisconsin) (C)

Interface Type	Category II# Monthly Rate (C) 5-Year Term
Protected 2 Gbps FICON	
N-MSA	$3,050.00
Price Band A	3,050.00
Price Band B	3,050.00
Price Band C	3,050.00
Protected Fiber Channel	
N-MSA	2,200.00
Price Band A	2,200.00
Price Band B	2,200.00
Price Band C	2,200.00
Protected 2 Gbps Fiber Channel	
N-MSA	3,050.00
Price Band A	3,050.00
Price Band B	3,050.00
Price Band C	3,050.00

Category II rates are not eligible for the discounts applied under Contract Tariff Options 5 or 9 as set forth in Section 21 following.

Service availability limited. Refer to # footnote on Page 20-281.

© 2022 Frontier Communications Parent, Inc. All rights reserved

20. Ethernet Private Line (Cont'd)
20.1 Dedicated SONET Optical Transport Service # # (Cont'd)
(K) Rates and Charges (Cont'd)
(4) Point-to-Point Optical Transport Channels
Single Port Interface (Cont'd)
25.
(a) Monthly Rates (Cont'd)

(Jurisdiction: Illinois, Indiana, Michigan, North Carolina, Ohio, South Carolina, and Wisconsin) (C)

Interface Type	Category II# Monthly Rate (C) 5-Year Term
Protected FDDI	
N-MSA	$2,200.00
Price Band A	2,200.00
Price Band B	2,200.00
Price Band C	2,200.00
Protected 1.06 Gbps ISC	
N-MSA	3,050.00
Price Band A	3,050.00
Price Band B	3,050.00
Price Band C	3,050.00
Protected 2Gbps ISC3	
N-MSA	3,050.00
Price Band A	3,050.00
Price Band B	3,050.00
Price Band C	3,050.00
Protected Fast Ethernet	
N-MSA	2,200.00
Price Band A	2,200.00
Price Band B	2,200.00
Price Band C	2,200.00
Protected Gigabit Ethernet	
N-MSA	2,200.00
Price Band A	2,200.00
Price Band B	2,200.00
Price Band C	2,200.00
Protected 10 Gigabit Ethernet LAN-PHY/WAN-PHY	
N-MSA	10,900.00
Price Band A	10,900.00
Price Band B	10,900.00
Price Band C	10,900.00
Protected D1 Video	
N-MSA	2,200.00
Price Band A	2,200.00
Price Band B	2,200.00
Price Band C	2,200.00

Category II rates are not eligible for the discounts applied under Contract Tariff Options 5 or 9 as set forth in Section 21 following.
Service availability limited. Refer to # footnote on Page 20-281.

© 2022 Frontier Communications Parent, Inc. All rights reserved

20. Ethernet Private Line (Cont'd)

20.1 Dedicated SONET Optical Transport Service # # (Cont'd)

(K) Rates and Charges (Cont'd)

(4) Point-to-Point Optical Transport Channels Single-Port Interface (Cont'd)

(a) Monthly Rates (Cont'd)

(Jurisdiction: Illinois, Indiana, Michigan, North Carolina, Ohio, South Carolina, and Wisconsin) (C)

Interface Type	Category II# Monthly Rate (C) 7 -Year Term
Unprotected SONET OC3/OC3c	
N-MSA	$ 850.00
Price Band A	850.00
Price Band B	850.00
Price Band C	850.00
Unprotected SONET OC12/OC12c	
N-MSA	950.00
Price Band A	950.00
Price Band B	950.00
Price Band C	950.00
Unprotected SONET OC48/OC48c	
N-MSA	1,400.00
Price Band A	1,400.00
Price Band B	1,400.00
Price Band C	1,400.00
Unprotected SONET OC192/OC192c	
N-MSA	5,300.00
Price Band A	5,300.00
Price Band B	5,300.00
Price Band C	5,300.00
Unprotected 1Gbps FICON	
N-MSA	1,600.00
Price Band A	1,600.00
Price Band B	1,600.00
Price Band C	1,600.00

* Concatenation not available on Switched interfaces.

\# Category II rates are not eligible for the discounts applied under Contract Tariff Options 5 or 9 as set forth in Section 21 following.

\# \# Service availability limited. Refer to # footnote on Page 20-281.

© 2022 Frontier Communications Parent, Inc. All rights reserved

1st 20. Ethernet Private Line (Cont'd)

20.1 Dedicated SONET Optical Transport Service # # (Cont'd)

(K) Rates and Charges (Cont'd)

(4) Point-to-Point Optical Transport Channels Single-Port Interface (Cont'd)

(a) Monthly Rates (Cont'd)

(Jurisdiction: Illinois, Indiana, Michigan, North Carolina, Ohio, South Carolina, and Wisconsin) (C)

Interface Type	Category II# Monthly Rate (C) 7 -Year Term
Unprotected 2 Gbps FICON	
N-MSA	$1,600.00
Price Band A	1,600.00
Price Band B	1,600.00
Price Band C	1,600.00
Unprotected Fiber Channel	
N-MSA	1,600.00
Price Band A	1,600.00
Price Band B	1,600.00
Price Band C	1,600.00
Unprotected 2 Gbps Fiber Channel	
N-MSA	1,600.00
Price Band A	1,600.00
Price Band B	1,600.00
Price Band C	1,600.00
Unprotected ETR/CLO	
N-MSA	1,600.00
Price Band A	1,600.00
Price Band B	1,600.00
Price Band C	1,600.00
Unprotected FDDI	
N-MSA	1,600.00
Price Band A	1,600.00
Price Band B	1,600.00
Price Band C	1,600.00

Category II rates are not eligible for the discounts applied under Contract Tariff Options 5 or 9 as set forth in Section 21 following.

Service availability limited. Refer to # footnote on Page 20-281.

© 2022 Frontier Communications Parent, Inc. All rights reserved

20. Ethernet Private Line (Cont'd)
20.1 Dedicated SONET Optical Transport Service # # (Cont'd)
(K) Rates and Charges (Cont'd)

(4) Point-to-Point Optical Transport Channels
Single-Port Interface (Cont'd)
26. (a) Monthly Rates (Cont'd)

(C)
(Jurisdiction: Illinois, (C)
Indiana, Michigan, North Carolina, Ohio, Category II# (C)
South Carolina, and Wisconsin) Monthly Rate

Interface Type	7 -Year Term
Unprotected 1.06 Gbps ISC	
N-MSA	$1,600.00
Price Band A	1,600.00
Price Band B	1,600.00
Price Band C	1,600.00
Unprotected 2Gbps ISC3	
N-MSA	1,600.00
Price Band A	1,600.00
Price Band B	1,600.00
Price Band C	1,600.00
Unprotected Fast Ethernet	
N-MSA	1,600.00
Price Band A	1,600.00
Price Band B	1,600.00
Price Band C	1,600.00
Unprotected Gigabit Ethernet	
N-MSA	1,600.00
Price Band A	1,600.00
Price Band B	1,600.00
Price Band C	1,600.00
Unprotected 10 Gigabit Ethernet LAN-PHY/WAN-PHY	
N-MSA	5,300.00
Price Band A	5,300.00
Price Band B	5,300.00
Price Band C	5,300.00
Unprotected D1 Video	
N-MSA	1,600.00
Price Band A	1,600.00
Price Band B	1,600.00
Price Band C	1,600.00

Category II rates are not eligible for the discounts applied under Contract Tariff Options 5 or 9 as set forth in Section 21 following.
Service availability limited. Refer to # footnote on Page 20-281.

© 2022 Frontier Communications Parent, Inc. All rights reserved

20. Ethernet Private Line (Cont'd)
20.1 Dedicated SONET Optical Transport Service # # (Cont'd)
(K) Rates and Charges (Cont'd)
(4) Point-to-Point Optical Transport Channels
Single-Port Interface (Cont'd)

(a) Monthly Rates (Cont'd)

(Jurisdiction: Illinois, (C)
Indiana, Michigan, North Carolina, Ohio, Category II# (C)
South Carolina, and Wisconsin) Monthly Rate (C)

Interface Type	7 -Year Term
Protected SONET OC3/OC3c	
N-MSA	$1,100.00
Price Band A	1,100.00
Price Band B	1,100.00
27. Price Band C	1,100.00
Protected SONET OC12/OC12c	
N-MSA	1,750.00
Price Band A	1,750.00
Price Band B	1,750.00
Price Band C	1,750.00
Protected SONET OC48/OC48c	
N-MSA	2,300.00
Price Band A	2,300.00
Price Band B	2,300.00
Price Band C	2,300.00
Protected SONET OC192/OC192c	
N-MSA	10,700.00
Price Band A	10,700.00
Price Band B	10,700.00
Price Band C	10,700.00
Protected 1Gbps FICON	
N-MSA	1,950.00
Price Band A	1,950.00
Price Band B	1,950.00
Price Band C	1,950.00
Protected 2 Gbps FICON	
N-MSA	3,000.00
Price Band A	3,000.00
Price Band B	3,000.00
Price Band C	3,000.00

* Concatenation not available on Switched interfaces.
\# Category II rates are not eligible for the discounts applied under Contract Tariff Options 5 or 9 as set forth in Section 21 following.
\# \# Service availability limited. Refer to # footnote on Page 20-281.

© 2022 Frontier Communications Parent, Inc. All rights reserved

20. Ethernet Private Line (Cont'd)
20.1 Dedicated SONET Optical Transport Service # # (Cont'd)
(K) Rates and Charges (Cont'd)

(4) Point-to-Point Optical Transport Channels
Single-Port Interface (Cont'd)

(a) Monthly Rates (Cont'd)

(Jurisdiction: Illinois, Indiana, Michigan, North Carolina, Ohio, South Carolina, and Wisconsin) (C)

Interface Type	Category II# Monthly Rate (C) 7 -Year Term
Protected Fiber Channel	
28. N-MSA $1,950.00	
Price Band A	1,950.00
Price Band B	1,950.00
Price Band C	1,950.00
Protected 2 Gbps Fiber Channel	
N-MSA	3,000.00
Price Band A	3,000.00
Price Band B	3,000.00
Price Band C	3,000.00
Protected FDDI	
N-MSA	1,950.00
Price Band A	1,950.00
Price Band B	1,950.00
Price Band C	1,950.00
Protected 1.06 Gbps ISC	
N-MSA	3,000.00
Price Band A	3,000.00
Price Band B	3,000.00
Price Band C	3,000.00
Protected 2Gbps ISC3	
N-MSA	3,000.00
Price Band A	3,000.00
Price Band B	3,000.00
Price Band C	3,000.00

Category II rates are not eligible for the discounts applied under Contract Tariff Options 5 or 9 as set forth in Section 21 following.

Service availability limited. Refer to # footnote on Page 20-281.

© 2022 Frontier Communications Parent, Inc. All rights reserved

20. Ethernet Private Line (Cont'd)

20.1 Dedicated SONET Optical Transport Service # # (Cont'd)

(K) Rates and Charges (Cont'd)

(4) Point-to-Point Optical Transport Channels Single-Port Interface (Cont'd)

(a) Monthly Rates (Cont'd)

(Jurisdiction: Illinois, Indiana, Michigan, North Carolina, Ohio, South Carolina, and Wisconsin) (C)

Interface Type	Category II# Monthly Rate (C) 7 -Year Term
Protected Fast Ethernet	
N-MSA	$ 1,950.00
29. Price Band A 1,950.00	
Price Band B	1,950.00
Price Band C	1,950.00
Protected Gigabit Ethernet	
N-MSA	1,950.00
Price Band A	1,950.00
Price Band B	1,950.00
Price Band C	1,950.00
Protected 10 Gigabit Ethernet LAN-PHY/WAN-PHY	
N-MSA	10,700.00
Price Band A	10,700.00
Price Band B	10,700.00
Price Band C	10,700.00
Protected D1 Video	
N-MSA	1,950.00
Price Band A	1,950.00
Price Band B	1,950.00
Price Band C	1,950.00

Category II rates are not eligible for the discounts applied under Contract Tariff Options 5 or 9 as set forth in Section 21 following.

Service availability limited. Refer to # footnote on Page 20-281.

© 2022 Frontier Communications Parent, Inc. All rights reserved

20. Ethernet Private Line (Cont'd)
20.1 Dedicated SONET Optical Transport Service # (Cont'd)
(K) Rates and Charges (Cont'd)

(4) Point-to-Point Optical Transport Channels
Single-Port Interface (Cont'd)

(b) Nonrecurring Charges

30. (Jurisdiction: Illinois, (C)
Indiana, Michigan, North Carolina, Ohio, (C)
(C)
South Carolina, and Wisconsin)

(1) Initial Installation Charges,
per optical transport channel

Interface Type	Category I Nonrecurring Charge
Unprotected SONET OC3/OC3c	
N-MSA	
$1.00	
Price Band A	1.00
Price Band B	1.00
Price Band C	1.00
Unprotected SONET OC12/OC12c	
N-MSA	1.00
Price Band A	1.00
Price Band B	1.00
Price Band C	1.00
Unprotected SONET OC48/OC48c	
N-MSA	1.00
Price Band A	1.00
Price Band B	1.00
Price Band C	1.00
Unprotected SONET OC192/OC192c	
N-MSA	1.00
Price Band A	1.00
Price Band B	1.00
Price Band C	1.00
Unprotected 1Gbps FICON	
N-MSA	1.00
Price Band A	1.00
Price Band B	1.00
Price Band C	1.00

* Concatenation not available on Switched interfaces.
\# Service availability limited. Refer to # footnote on Page 20-281.

© 2022 Frontier Communications Parent, Inc. All rights reserved

20. Ethernet Private Line (Cont'd)

20.1 Dedicated SONET Optical Transport Service # (Cont'd)

(K) Rates and Charges (Cont'd)

(4) Point-to-Point Optical Transport Channels Single-Port Interface (Cont'd)

(b) Nonrecurring Charges (Cont'd)

(Jurisdiction: Illinois, (C)
Indiana, Michigan, North Carolina, Ohio, (C)
South Carolina, and Wisconsin) (C)

(1) Initial Installation Charges, per optical transport channel (Cont'd)

Interface Type	Category I Nonrecurring Charge
Unprotected 2Gbps FICON	
N-MSA	$1.00
31. Price Band A 1.00	
Price Band B	1.00
Price Band C	1.00
Unprotected Fiber Channel	
N-MSA	1.00
Price Band A	1.00
Price Band B	1.00
Price Band C	1.00
Unprotected 2Gbps Fiber Channel	
N-MSA	1.00
Price Band A	1.00
Price Band B	1.00
Price Band C	1.00
Unprotected ETR/CLO	
N-MSA	1.00
Price Band A	1.00
Price Band B	1.00
Price Band C	1.00
Unprotected FDDI	
N-MSA	1.00
Price Band A	1.00
Price Band B	1.00
Price Band C	1.00

Service availability limited. Refer to # footnote on Page 20-281.

© 2022 Frontier Communications Parent, Inc. All rights reserved

20. Ethernet Private Line (Cont'd)
20.1 Dedicated SONET Optical Transport Service # (Cont'd)
(K) Rates and Charges (Cont'd)

(4) Point-to-Point Optical Transport Channels
Single-Port Interface (Cont'd)

(b) Nonrecurring Charges (Cont'd)

(Jurisdiction: Illinois, (C)
Indiana, Michigan, North Carolina, Ohio, (C)
South Carolina, and Wisconsin) (C)

(1) Initial Installation Charges,
32. per optical transport channel (Cont'd)

Interface Type	Category I Nonrecurring Charge
Unprotected 1.06 Gbps ISC	
N-MSA	$1.00
Price Band A	1.00
Price Band B	1.00
Price Band C	1.00
Unprotected 2Gbps ISC3	
N-MSA	1.00
Price Band A	1.00
Price Band B	1.00
Price Band C	1.00
Unprotected Fast Ethernet	
N-MSA	1.00
Price Band A	1.00
Price Band B	1.00
Price Band C	1.00
Unprotected Gigabit Ethernet	
N-MSA	1.00
Price Band A	1.00
Price Band B	1.00
Price Band C	1.00
Unprotected 10 Gigabit Ethernet LAN-PHY/WAN-PHY	
N-MSA	1.00
Price Band A	1.00
Price Band B	1.00
Price Band C	1.00

Service availability limited. Refer to # footnote on Page 20-281.

© 2022 Frontier Communications Parent, Inc. All rights reserved

20. Ethernet Private Line (Cont'd)
20.1 Dedicated SONET Optical Transport Service # (Cont'd)
(K) Rates and Charges (Cont'd)
(4) Point-to-Point Optical Transport Channels
Single-Port Interface (Cont'd)

(b) Nonrecurring Charges (Cont'd)

33. (Jurisdiction: Illinois, (C)
Indiana, Michigan, North Carolina, Ohio, (C)
(C)
South Carolina, and Wisconsin)

(1) Initial Installation Charges,
per optical transport channel (Cont'd)

Interface Type	Category I Nonrecurring Charge
Unprotected D1 Video	
N-MSA	$1.00
Price Band A	1.00
Price Band B	1.00
Price Band C	1.00
Protected SONET OC3/OC3c	
N-MSA	1.00
Price Band A	1.00
Price Band B	1.00
Price Band C	1.00
Protected SONET OC12/OC12c	
N-MSA	1.00
Price Band A	1.00
Price Band B	1.00
Price Band C	1.00
Protected SONET OC48/OC48c	
N-MSA	1.00
Price Band A	1.00
Price Band B	1.00
Price Band C	1.00
Protected SONET OC192/OC192c	
N-MSA	1.00
Price Band A	1.00
Price Band B	1.00
Price Band C	1.00

* Concatenation not available on Switched interfaces.
\# Service availability limited. Refer to # footnote on Page 20-281.

© 2022 Frontier Communications Parent, Inc. All rights reserved

20. Ethernet Private Line (Cont'd)
20.1 Dedicated SONET Optical Transport Service # (Cont'd)
(K) Rates and Charges (Cont'd)
(4) Point-to-Point Optical Transport Channels
Single-Port Interface (Cont'd)

(b) Nonrecurring Charges (Cont'd)

(Jurisdiction: Illinois, (C)
Indiana, Michigan, North Carolina, Ohio, (C)
South Carolina, and Wisconsin) (C)

(1) Initial Installation Charges,
per optical transport channel (Cont'd)

Interface Type	Category I Nonrecurring Charge
34. Protected 1Gbps FICON	
N-MSA	$1.00
Price Band A	1.00
Price Band B	1.00
Price Band C	1.00
Protected 2Gbps FICON	
N-MSA	1.00
Price Band A	1.00
Price Band B	1.00
Price Band C	1.00
Protected Fiber Channel	
N-MSA	1.00
Price Band A	1.00
Price Band B	1.00
Price Band C	1.00
Protected 2Gbps Fiber Channel	
N-MSA	1.00
Price Band A	1.00
Price Band B	1.00
Price Band C	1.00
Protected FDDI	
N-MSA	1.00
Price Band A	1.00
Price Band B	1.00
Price Band C	1.00

Service availability limited. Refer to # footnote on Page 20-281.

© 2022 Frontier Communications Parent, Inc. All rights reserved

20. Ethernet Private Line (Cont'd)
20.1 Dedicated SONET Optical Transport Service # (Cont'd)
(K) Rates and Charges (Cont'd)
(4) Point-to-Point Optical Transport Channels
Single-Port Interface (Cont'd)

(b) Nonrecurring Charges (Cont'd)

(Jurisdiction: Illinois, (C)
Indiana, Michigan, North Carolina, Ohio, (C)
South Carolina, and Wisconsin) (C)

(1) Initial Installation Charges,
per optical transport channel (Cont'd)

Interface Type	Category I Nonrecurring Charge
35. Protected 1.06 Gbps ISC	
N-MSA	$1.00
Price Band A	1.00
Price Band B	1.00
Price Band C	1.00
Protected 2Gbps ISC3	
N-MSA	1.00
Price Band A	1.00
Price Band B	1.00
Price Band C	1.00
Protected Fast Ethernet	
N-MSA	1.00
Price Band A	1.00
Price Band B	1.00
Price Band C	1.00
Protected Gigabit Ethernet	
N-MSA	1.00
Price Band A	1.00
Price Band B	1.00
Price Band C	1.00
Protected 10 Gigabit Ethernet LAN-PHY/WAN-PHY	
N-MSA	1.00
Price Band A	1.00
Price Band B	1.00
Price Band C	1.00
Protected D1 Video	
N-MSA	1.00
Price Band A	1.00
Price Band B	1.00
Price Band C	1.00

Service availability limited. Refer to # footnote on Page 20-281.

© 2022 Frontier Communications Parent, Inc. All rights reserved

20. Ethernet Private Line (Cont'd)

20.1 Dedicated SONET Optical Transport Service # (Cont'd)

(K) Rates and Charges (Cont'd)

(4) Point-to-Point Optical Transport Channels Single-Port Interface (Cont'd)

(b) Nonrecurring Charges (Cont'd)

(Jurisdiction: Illinois, (C)
Indiana, Michigan, North Carolina, Ohio, (C)
South Carolina, and Wisconsin) (C)

(1) Initial Installation Charges, per optical transport channel (Cont'd)

Interface Type	Category II Nonrecurring Charge
Unprotected SONET OC3/OC3c	
N-MSA	$1.00
36. Price Band A 1.00	
Price Band B	1.00
Price Band C	1.00
Unprotected SONET OC12/OC12c	
N-MSA	1.00
Price Band A	1.00
Price Band B	1.00
Price Band C	1.00
Unprotected SONET OC48/OC48c	
N-MSA	1.00
Price Band A	1.00
Price Band B	1.00
Price Band C	1.00
Unprotected SONET OC192/OC192c	
N-MSA	1.00
Price Band A	1.00
Price Band B	1.00
Price Band C	1.00
Unprotected 1Gbps FICON	
N-MSA	1.00
Price Band A	1.00
Price Band B	1.00
Price Band C	1.00

* Concatenation not available on Switched interfaces.
\# Service availability limited. Refer to # footnote on Page 20-281.

© 2022 Frontier Communications Parent, Inc. All rights reserved

20. Ethernet Private Line (Cont'd)

20.1 Dedicated SONET Optical Transport Service # (Cont'd)

(K) Rates and Charges (Cont'd)

(4) Point-to-Point Optical Transport Channels
Single-Port Interface (Cont'd)

(b) Nonrecurring Charges (Cont'd)

(Jurisdiction: Illinois, (C)
Indiana, Michigan, North Carolina, Ohio, (C)
South Carolina, and Wisconsin) (C)

(1) Initial Installation Charges,
per optical transport channel (Cont'd)

Interface Type	Category II Nonrecurring Charge
Unprotected 2Gbps FICON	
N-MSA	$1.00
Price Band A	1.00
37. Price Band B 1.00	
Price Band C	1.00
Unprotected Fiber Channel	
N-MSA	1.00
Price Band A	1.00
Price Band B	1.00
Price Band C	1.00
Unprotected 2Gbps Fiber Channel	
N-MSA	1.00
Price Band A	1.00
Price Band B	1.00
Price Band C	1.00
Unprotected ETR/CLO	
N-MSA	1.00
Price Band A	1.00
Price Band B	1.00
Price Band C	1.00
Unprotected FDDI	
N-MSA	1.00
Price Band A	1.00
Price Band B	1.00
Price Band C	1.00

Service availability limited. Refer to # footnote on Page 20-281.

© 2022 Frontier Communications Parent, Inc. All rights reserved

20. Ethernet Private Line (Cont'd)
20.1 Dedicated SONET Optical Transport Service # (Cont'd)
(K) Rates and Charges (Cont'd)

(4) Point-to-Point Optical Transport Channels
Single-Port Interface (Cont'd)

(b) Nonrecurring Charges (Cont'd)

(Jurisdiction: Illinois, (C)
Indiana, Michigan, North Carolina, Ohio, (C)
South Carolina, and Wisconsin) (C)

(1) Initial Installation Charges,
per optical transport channel (Cont'd)

Interface Type	Category II Nonrecurring Charge
Unprotected 1.06 Gbps ISC	
N-MSA	$1.00
Price Band A	1.00
Price Band B	1.00
Price Band C	1.00
Unprotected 2Gbps ISC3	
N-MSA	1.00
Price Band A	1.00
Price Band B	1.00
Price Band C	1.00
Unprotected Fast Ethernet	
N-MSA	1.00
Price Band A	1.00
Price Band B	1.00
Price Band C	1.00
Unprotected Gigabit Ethernet	
N-MSA	1.00
Price Band A	1.00
Price Band B	1.00
Price Band C	1.00
Unprotected 10 Gigabit Ethernet LAN-PHY/WAN-PHY	
N-MSA	1.00
Price Band A	1.00
Price Band B	1.00
Price Band C	1.00

Service availability limited. Refer to # footnote on Page 20-281.

© 2022 Frontier Communications Parent, Inc. All rights reserved

20. Ethernet Private Line (Cont'd)
20.1 Dedicated SONET Optical Transport Service # (Cont'd)
(K) Rates and Charges (Cont'd)
(4) Point-to-Point Optical Transport Channels
Single-Port Interface (Cont'd)

(b) Nonrecurring Charges (Cont'd)

(Jurisdiction: Illinois, (C)
Indiana, Michigan, North Carolina, Ohio, (C)
South Carolina, and Wisconsin) (C)

(1) Initial Installation Charges,
per optical transport channel (Cont'd)

Interface Type	Category II Nonrecurring Charge
Unprotected D1 Video	
N-MSA	$1.00
Price Band A	1.00
Price Band B	1.00
Price Band C	1.00
Protected SONET OC3/OC3c	
N-MSA	1.00
Price Band A	1.00
Price Band B	1.00
Price Band C	1.00
Protected SONET OC12/OC12c	
N-MSA	1.00
Price Band A	1.00
Price Band B	1.00
Price Band C	1.00
Protected SONET OC48/OC48c	
N-MSA	1.00
Price Band A	1.00
Price Band B	1.00
Price Band C	1.00
Protected SONET OC192/OC192c	
N-MSA	1.00
Price Band A	1.00
Price Band B	1.00
Price Band C	1.00

* Concatenation not available on Switched interfaces.
\# Service availability limited. Refer to # footnote on Page 20-281.

© 2022 Frontier Communications Parent, Inc. All rights reserved

20. Ethernet Private Line (Cont'd)

20.1 Dedicated SONET Optical Transport Service # (Cont'd)
(K) Rates and Charges (Cont'd)

(4) Point-to-Point Optical Transport Channels
Single-Port Interface (Cont'd)

(b) Nonrecurring Charges (Cont'd)

(Jurisdiction: Illinois, (C)
Indiana, Michigan, North Carolina, Ohio, (C)
South Carolina, and Wisconsin) (C)

(1) Initial Installation Charges,
per optical transport channel (Cont'd)

Interface Type	Category II Nonrecurring Charge
Protected 1Gbps FICON	
N-MSA	$1.00
Price Band A	1.00
Price Band B	1.00
Price Band C	1.00
Protected 2Gbps FICON	
N-MSA	1.00
Price Band A	1.00
Price Band B	1.00
Price Band C	1.00
Protected Fiber Channel	
N-MSA	1.00
Price Band A	1.00
Price Band B	1.00
Price Band C	1.00
Protected 2Gbps Fiber Channel	
N-MSA	1.00
Price Band A	1.00
Price Band B	1.00
Price Band C	1.00
Protected FDDI	
N-MSA	1.00
Price Band A	1.00
Price Band B	1.00
Price Band C	1.00

Service availability limited. Refer to # footnote on Page 20-281.

© 2022 Frontier Communications Parent, Inc. All rights reserved

20. Ethernet Private Line (Cont'd)

20.1 Dedicated SONET Optical Transport Service # (Cont'd)
(K) Rates and Charges (Cont'd)

(4) Point-to-Point Optical Transport Channels
Single-Port Interface (Cont'd)

(b) Nonrecurring Charges (Cont'd)

(Jurisdiction: Illinois, (C)
Indiana, Michigan, North Carolina, Ohio, (C)
South Carolina, and Wisconsin) (C)

(1) Initial Installation Charges,
per optical transport channel (Cont'd)

Interface Type	Category II Nonrecurring Charge
Protected 1.06 Gbps ISC	
N-MSA	$1.00
Price Band A	1.00
Price Band B	1.00
Price Band C	1.00
Protected 2Gbps ISC3	
N-MSA	1.00
Price Band A	1.00
Price Band B	1.00
Price Band C	1.00
Protected Fast Ethernet	
N-MSA	1.00
Price Band A	1.00
Price Band B	1.00
Price Band C	1.00
Protected Gigabit Ethernet	
N-MSA	1.00
Price Band A	1.00
Price Band B	1.00
Price Band C	1.00
Protected 10 Gigabit Ethernet LAN-PHY/WAN-PHY	
N-MSA	1.00
Price Band A	1.00
Price Band B	1.00
Price Band C	1.00
Protected D1 Video	
N-MSA	1.00
Price Band A	1.00
Price Band B	1.00
Price Band C	1.00

Service availability limited. Refer to # footnote on Page 20-281.

© 2022 Frontier Communications Parent, Inc. All rights reserved

20. Ethernet Private Line (Cont'd)

20.1 Dedicated SONET Optical Transport Service # (Cont'd)
(K) Rates and Charges (Cont'd)

(4) Point-to-Point Optical Transport Channels
Single-Port Interface (Cont'd)

(b) Nonrecurring Charges

(Jurisdiction: Illinois, (C)
Indiana, Michigan, North Carolina, Ohio, (C)
South Carolina, and Wisconsin) (C)

(2) Subsequent Installation Charges,
per optical transport channel

Interface Type	Category I Nonrecurring Charge
Unprotected SONET OC3/OC3c	
N-MSA	$1.00
Price Band A	1.00
Price Band B	1.00
Price Band C	1.00
Unprotected SONET OC12/OC12c	
N-MSA	1.00
Price Band A	1.00
Price Band B	1.00
Price Band C	1.00
Unprotected SONET OC48/C48c	
N-MSA	1.00
Price Band A	1.00
Price Band B	1.00
Price Band C	1.00
Unprotected SONET OC192/192c	
N-MSA	1.00
Price Band A	1.00
Price Band B	1.00
Price Band C	1.00
Unprotected 1Gbps FICON	
N-MSA	1.00
Price Band A	1.00
Price Band B	1.00
Price Band C	1.00

* Concatenation not available on Switched interfaces.
\# Service availability limited. Refer to # footnote on Page 20-281.

© 2022 Frontier Communications Parent, Inc. All rights reserved

20. Ethernet Private Line (Cont'd)

20.1 Dedicated SONET Optical Transport Service # (Cont'd)
(K) Rates and Charges (Cont'd)

(4) Point-to-Point Optical Transport Channels
Single-Port Interface (Cont'd)

(b) Nonrecurring Charges (Cont'd)

(Jurisdiction: Illinois, (C)
Indiana, Michigan, North Carolina, Ohio, (C)
South Carolina, and Wisconsin) (C)

(2) Subsequent Installation Charges,
per optical transport channel (Cont'd)

Interface Type	Category I Nonrecurring Charge
Unprotected 2Gbps FICON	
N-MSA	$1.00
Price Band A	1.00
Price Band B	1.00
Price Band C	1.00
Unprotected Fiber Channel	
N-MSA	1.00
Price Band A	1.00
Price Band B	1.00
Price Band C	1.00
Unprotected 2Gbps Fiber Channel	
N-MSA	1.00
Price Band A	1.00
Price Band B	1.00
Price Band C	1.00
Unprotected ETR/CLO	
N-MSA	1.00
Price Band A	1.00
Price Band B	1.00
Price Band C	1.00
Unprotected FDDI	
N-MSA	1.00
Price Band A	1.00
Price Band B	1.00
Price Band C	1.00

Service availability limited. Refer to # footnote on Page 20-281.

© 2022 Frontier Communications Parent, Inc. All rights reserved

20. Ethernet Private Line (Cont'd)

20.1 Dedicated SONET Optical Transport Service # (Cont'd)

(K) Rates and Charges (Cont'd)

(4) Point-to-Point Optical Transport Channels Single-Port Interface (Cont'd)

(b) Nonrecurring Charges (Cont'd)

(Jurisdiction: Illinois, (C)
Indiana, Michigan, North Carolina, Ohio, (C)
South Carolina, and Wisconsin) (C)

(2) Subsequent Installation Charges, per optical transport channel (Cont'd)

Interface Type	Category I Nonrecurring Charge
Unprotected 1.06 Gbps ISC	
N-MSA	$1.00
Price Band A	1.00
Price Band B	1.00
Price Band C	1.00
Unprotected 2Gbps ISC3	
N-MSA	1.00
Price Band A	1.00
Price Band B	1.00
Price Band C	1.00
Unprotected Fast Ethernet	
N-MSA	1.00
Price Band A	1.00
Price Band B	1.00
Price Band C	1.00
Unprotected Gigabit Ethernet	
N-MSA	1.00
Price Band A	1.00
Price Band B	1.00
Price Band C	1.00
Unprotected 10 Gigabit Ethernet LAN-PHY/WAN-PHY	
N-MSA	1.00
Price Band A	1.00
Price Band B	1.00
Price Band C	1.00

Service availability limited. Refer to # footnote on Page 20-281.

© 2022 Frontier Communications Parent, Inc. All rights reserved

20. Ethernet Private Line (Cont'd)

20.1 Dedicated SONET Optical Transport Service # (Cont'd)

(K) Rates and Charges (Cont'd)

(4) Point-to-Point Optical Transport Channels Single-Port Interface (Cont'd)

(b) Nonrecurring Charges (Cont'd)

(Jurisdiction: Illinois, (C)
Indiana, Michigan, North Carolina, Ohio, (C)
South Carolina, and Wisconsin) (C)

(2) Subsequent Installation Charges, per optical transport channel (Cont'd)

Interface Type	Category I Nonrecurring Charge
Unprotected D1 Video	
N-MSA	$1.00
Price Band A	1.00
Price Band B	1.00
Price Band C	1.00
Protected SONET OC3/OC3c	
N-MSA	1.00
Price Band A	1.00
Price Band B	1.00
Price Band C	1.00
Protected SONET OC12/OC12c	
N-MSA	1.00
Price Band A	1.00
Price Band B	1.00
Price Band C	1.00
Protected SONET OC48/OC48c	
N-MSA	1.00
Price Band A	1.00
Price Band B	1.00
Price Band C	1.00
Protected SONET OC192/OC192c	
N-MSA	1.00
Price Band A	1.00
Price Band B	1.00
Price Band C	1.00

* Concatenation not available on Switched interfaces.
\# Service availability limited. Refer to # footnote on Page 20-281.

© 2022 Frontier Communications Parent, Inc. All rights reserved

20. Ethernet Private Line (Cont'd)

20.1 Dedicated SONET Optical Transport Service # (Cont'd)

(K) Rates and Charges (Cont'd)

(4) Point-to-Point Optical Transport Channels Single-Port Interface (Cont'd)

(b) Nonrecurring Charges (Cont'd)

(Jurisdiction: Illinois, (C)
Indiana, Michigan, North Carolina, Ohio, (C)
South Carolina, and Wisconsin) (C)

(2) Subsequent Installation Charges, per optical transport channel (Cont'd)

Interface Type	Category I Nonrecurring Charge
Protected 1Gbps FICON	
N-MSA	$1.00
Price Band A	1.00
Price Band B	1.00
Price Band C	1.00
Protected 2Gbps FICON	
N-MSA	1.00
Price Band A	1.00
Price Band B	1.00
Price Band C	1.00
Protected Fiber Channel	
N-MSA	1.00
Price Band A	1.00
Price Band B	1.00
Price Band C	1.00
Protected 2 Gbps Fiber Channel	
N-MSA	1.00
Price Band A	1.00
Price Band B	1.00
Price Band C	1.00
Protected FDDI	
N-MSA	1.00
Price Band A	1.00
Price Band B	1.00
Price Band C	1.00

Service availability limited. Refer to # footnote on Page 20-281.

© 2022 Frontier Communications Parent, Inc. All rights reserved

20. Ethernet Private Line (Cont'd)
20.1 Dedicated SONET Optical Transport Service # (Cont'd)
(K) Rates and Charges (Cont'd)
(4) Point-to-Point Optical Transport Channels
Single-Port Interface (Cont'd)

(b) Nonrecurring Charges (Cont'd)

(Jurisdiction: Illinois, (C)
Indiana, Michigan, North Carolina, Ohio, (C)
South Carolina, and Wisconsin) (C)

(2) Subsequent Installation Charges,
per optical transport channel (Cont'd)

Interface Type	Category I Nonrecurring Charge
Protected 1.06 Gbps ISC	
N-MSA	$1.00
Price Band A	1.00
Price Band B	1.00
Price Band C	1.00
Protected 2Gbps ISC3	
N-MSA	1.00
Price Band A	1.00
Price Band B	1.00
Price Band C	1.00
Protected Fast Ethernet	
N-MSA	1.00
Price Band A	1.00
Price Band B	1.00
Price Band C	1.00
Protected Gigabit Ethernet	
N-MSA	1.00
Price Band A	1.00
Price Band B	1.00
Price Band C	1.00
Protected 10 Gigabit Ethernet LAN-PHY/WAN-PHY	
N-MSA	1.00
Price Band A	1.00
Price Band B	1.00
Price Band C	1.00
Protected D1 Video	
N-MSA	1.00
Price Band A	1.00
Price Band B	1.00
Price Band C	1.00

Service availability limited. Refer to # footnote on Page 20-281.

© 2022 Frontier Communications Parent, Inc. All rights reserved

20. Ethernet Private Line (Cont'd)

20.1 Dedicated SONET Optical Transport Service # (Cont'd)
(K) Rates and Charges (Cont'd)

(4) Point-to-Point Optical Transport Channels
Single-Port Interface (Cont'd)

(b) Nonrecurring Charges (Cont'd)

(Jurisdiction: Illinois, (C)
Indiana, Michigan, North Carolina, Ohio, (C)
South Carolina, and Wisconsin) (C)

(2) Subsequent Installation Charges,
per optical transport channel (Cont'd)

Interface Type	Category I Nonrecurring Charge
Unprotected SONET OC3/OC3c	
N-MSA	$1.00
Price Band A	1.00
Price Band B	1.00
Price Band C	1.00
Unprotected SONET OC12/OC12c	
N-MSA	1.00
Price Band A	1.00
Price Band B	1.00
Price Band C	1.00
Unprotected SONET OC48/C48c	
N-MSA	1.00
Price Band A	1.00
Price Band B	1.00
Price Band C	1.00
Unprotected SONET OC192/192c	
N-MSA	1.00
Price Band A	1.00
Price Band B	1.00
Price Band C	1.00
Unprotected 1Gbps FICON	
N-MSA	1.00
Price Band A	1.00
Price Band B	1.00
Price Band C	1.00

* Concatenation not available on Switched interfaces.
\# Service availability limited. Refer to # footnote on Page 20-281.

© 2022 Frontier Communications Parent, Inc. All rights reserved

20. Ethernet Private Line (Cont'd)

20.1 Dedicated SONET Optical Transport Service # (Cont'd)
(K) Rates and Charges (Cont'd)

(4) Point-to-Point Optical Transport Channels
Single-Port Interface (Cont'd)

(b) Nonrecurring Charges (Cont'd)

(Jurisdiction: Illinois, (C)
Indiana, Michigan, North Carolina, Ohio, (C)
South Carolina, and Wisconsin) (C)

(2) Subsequent Installation Charges,
per optical transport channel (Cont'd)

Interface Type	Category II Nonrecurring Charge
Unprotected 2Gbps FICON	
N-MSA	$1.00
Price Band A	1.00
Price Band B	1.00
Price Band C	1.00
Unprotected Fiber Channel	
N-MSA	1.00
Price Band A	1.00
Price Band B	1.00
Price Band C	1.00
Unprotected 2Gbps Fiber Channel	
N-MSA	1.00
Price Band A	1.00
Price Band B	1.00
Price Band C	1.00
Unprotected ETR/CLO	
N-MSA	1.00
Price Band A	1.00
Price Band B	1.00
Price Band C	1.00
Unprotected FDDI	
N-MSA	1.00
Price Band A	1.00
Price Band B	1.00
Price Band C	1.00

Service availability limited. Refer to # footnote on Page 20-281.

© 2022 Frontier Communications Parent, Inc. All rights reserved

20. Ethernet Private Line (Cont'd)

20.1 Dedicated SONET Optical Transport Service # (Cont'd)

(K) Rates and Charges (Cont'd)

(4) Point-to-Point Optical Transport Channels Single-Port Interface (Cont'd)

(b) Nonrecurring Charges (Cont'd)

(Jurisdiction: Illinois, (C)
Indiana, Michigan, North Carolina, Ohio, (C)
South Carolina, and Wisconsin) (C)

(2) Subsequent Installation Charges, per optical transport channel (Cont'd)

Interface Type	Category II Nonrecurring Charge
Unprotected 1.06 Gbps ISC	
N-MSA	$1.00
Price Band A	1.00
Price Band B	1.00
Price Band C	1.00
Unprotected 2Gbps ISC3	
N-MSA	1.00
Price Band A	1.00
Price Band B	1.00
Price Band C	1.00
Unprotected Fast Ethernet	
N-MSA	1.00
Price Band A	1.00
Price Band B	1.00
Price Band C	1.00
Unprotected Gigabit Ethernet	
N-MSA	1.00
Price Band A	1.00
Price Band B	1.00
Price Band C	1.00
Unprotected 10 Gigabit Ethernet LAN-PHY/WAN-PHY	
N-MSA	1.00
Price Band A	1.00
Price Band B	1.00
Price Band C	1.00

Service availability limited. Refer to # footnote on Page 20-281.

© 2022 Frontier Communications Parent, Inc. All rights reserved

20. Ethernet Private Line (Cont'd)
20.1 Dedicated SONET Optical Transport Service # (Cont'd)

(K) Rates and Charges (Cont'd)

(4) Point-to-Point Optical Transport Channels Single-Port Interface (Cont'd)

(b) Nonrecurring Charges (Cont'd)

(Jurisdiction: Illinois, (C)
Indiana, Michigan, North Carolina, Ohio, (C)
South Carolina, and Wisconsin) (C)

(2) Subsequent Installation Charges, per optical transport channel (Cont'd)

Interface Type	Category II Nonrecurring Charge
Unprotected D1 Video	
N-MSA	$1.00
Price Band A	1.00
Price Band B	1.00
Price Band C	1.00
Protected SONET OC3/OC3c	
N-MSA	1.00
Price Band A	1.00
Price Band B	1.00
Price Band C	1.00
Protected SONET OC12/OC12c	
N-MSA	1.00
Price Band A	1.00
Price Band B	1.00
Price Band C	1.00
Protected SONET OC48/OC48c	
N-MSA	1.00
Price Band A	1.00
Price Band B	1.00
Price Band C	1.00
Protected SONET OC192/OC192c	
N-MSA	1.00
Price Band A	1.00
Price Band B	1.00
Price Band C	1.00

* Concatenation not available on Switched interfaces.
\# Service availability limited. Refer to # footnote on Page 20-281.

© 2022 Frontier Communications Parent, Inc. All rights reserved

20. Ethernet Private Line (Cont'd)

20.1 Dedicated SONET Optical Transport Service # (Cont'd)

(K) Rates and Charges (Cont'd)

(4) Point-to-Point Optical Transport Channels Single-Port Interface (Cont'd)

(b) Nonrecurring Charges (Cont'd)

(Jurisdiction: Illinois, (C)
Indiana, Michigan, North Carolina, Ohio, (C)
South Carolina, and Wisconsin) (C)

(2) Subsequent Installation Charges, per optical transport channel (Cont'd)

Interface Type	Category II Nonrecurring Charge
Protected 1Gbps FICON	
N-MSA	$1.00
Price Band A	1.00
Price Band B	1.00
Price Band C	1.00
Protected 2Gbps FICON	
N-MSA	1.00
Price Band A	1.00
Price Band B	1.00
Price Band C	1.00
Protected Fiber Channel	
N-MSA	1.00
Price Band A	1.00
Price Band B	1.00
Price Band C	1.00
Protected 2 Gbps Fiber Channel	
N-MSA	1.00
Price Band A	1.00
Price Band B	1.00
Price Band C	1.00
Protected FDDI	
N-MSA	1.00
Price Band A	1.00
Price Band B	1.00
Price Band C	1.00

Service availability limited. Refer to # footnote on Page 20-281.

© 2022 Frontier Communications Parent, Inc. All rights reserved

20. Ethernet Private Line (Cont'd)

20.1 Dedicated SONET Optical Transport Service # (Cont'd)
(K) Rates and Charges (Cont'd)

(4) Point-to-Point Optical Transport Channels
Single-Port Interface (Cont'd)

(b) Nonrecurring Charges (Cont'd)

(Jurisdiction: Illinois, (C)
Indiana, Michigan, North Carolina, Ohio, (C)
South Carolina, and Wisconsin) (C)

(2) Subsequent Installation Charges,
per optical transport channel (Cont'd)

Interface Type	Category II Nonrecurring Charge
Protected 1.06 Gbps ISC	
N-MSA	$1.00
Price Band A	1.00
Price Band B	1.00
Price Band C	1.00
Protected 2Gbps ISC3	
N-MSA	1.00
Price Band A	1.00
Price Band B	1.00
Price Band C	1.00
Protected Fast Ethernet	
N-MSA	1.00
Price Band A	1.00
Price Band B	1.00
Price Band C	1.00
Protected Gigabit Ethernet	
N-MSA	1.00
Price Band A	1.00
Price Band B	1.00
Price Band C	1.00
Protected 10 Gigabit Ethernet LAN-PHY/WAN-PHY	
N-MSA	1.00
Price Band A	1.00
Price Band B	1.00
Price Band C	1.00
Protected D1 Video	
N-MSA	1.00
Price Band A	1.00
Price Band B	1.00
Price Band C	1.00

Service availability limited. Refer to # footnote on Page 20-281.

© 2022 Frontier Communications Parent, Inc. All rights reserved

20. Ethernet Private Line (Cont'd)

20.1 Dedicated SONET Optical Transport Service # (Cont'd)

(K) Rates and Charges (Cont'd)

(5) Optical Transport Channels
Multi Port Interface

(a) Monthly Rates

(Jurisdiction: Illinois, Indiana, Michigan, North Carolina, Ohio, South Carolina, and Wisconsin) (C)

Interface Type	Category I Monthly Rate (C) 3-Year Term
Unprotected Multi-port Facility	
N-MSA	$4,700.00
Price Band A	4,700.00
Price Band B	4,700.00
Price Band C	4,700.00
Unprotected Multi-port Channels	
-Unprotected ESCON	
N-MSA	225.00
Price Band A	225.00
Price Band B	225.00
Price Band C	225.00
-Unprotected Fiber Channel	
N-MSA	225.00
Price Band A	225.00
Price Band B	225.00
Price Band C	225.00
-Unprotected FDDI	
N-MSA	225.00
Price Band A	225.00
Price Band B	225.00
Price Band C	225.00
-Unprotected Fast Ethernet	
N-MSA	225.00
Price Band A	225.00
Price Band B	225.00
Price Band C	225.00
-Unprotected D1 Video	
N-MSA	225.00
Price Band A	225.00
Price Band B	225.00
Price Band C	225.00

Service availability limited. Refer to # footnote on Page 20-281.

© 2022 Frontier Communications Parent, Inc. All rights reserved

20. Ethernet Private Line (Cont'd)

20.1 Dedicated SONET Optical Transport Service # (Cont'd)

(K) Rates and Charges (Cont'd)

(5) Optical Transport Channels
Multi Port Interface (Cont'd)

(a) Monthly Rates (Cont'd)

(Jurisdiction: Illinois, Indiana, Michigan, North Carolina, Ohio, South Carolina, and Wisconsin) (C)

Interface Type	Category I Monthly Rate (C) 3-Year Term
Protected Multi-port Facility	
N-MSA	$5,700.00
Price Band A	5,700.00
Price Band B	5,700.00
Price Band C	5,700.00
Protected Multi-port Channels	
-Protected ESCON	
N-MSA	225.00
Price Band A	225.00
Price Band B	225.00
Price Band C	225.00
-Protected Fiber Channel	
N-MSA	225.00
Price Band A	225.00
Price Band B	225.00
Price Band C	225.00
-Protected FDDI	
N-MSA	225.00
Price Band A	225.00
Price Band B	225.00
Price Band C	225.00
-Protected Fast Ethernet	
N-MSA	225.00
Price Band A	225.00
Price Band B	225.00
Price Band C	225.00
-Protected D1 Video	
N-MSA	225.00
Price Band A	225.00
Price Band B	225.00
Price Band C	225.00

Service availability limited. Refer to # footnote on Page 20-281.

© 2022 Frontier Communications Parent, Inc. All rights reserved

20. Ethernet Private Line (Cont'd)

20.1 Dedicated SONET Optical Transport Service # (Cont'd)
(K) Rates and Charges (Cont'd)

(5) Optical Transport Channels
Multi-Port Interface (Cont'd)

(a) Monthly Rates (Cont'd)

(Jurisdiction: Illinois, Indiana, Michigan, North Carolina, Ohio, South Carolina, and Wisconsin) (C)

Interface Type	Category I Monthly Rate (C) 5-Year Term
Unprotected Multi-port Facility	
N-MSA	$2,500.00
Price Band A	2,500.00
Price Band B	2,500.00
Price Band C	2,500.00
Unprotected Multi-port Channels	
-Unprotected ESCON	
N-MSA	225.00
Price Band A	225.00
Price Band B	225.00
Price Band C	225.00
-Unprotected Fiber Channel	
N-MSA	225.00
Price Band A	225.00
Price Band B	225.00
Price Band C	225.00
-Unprotected FDDI	
N-MSA	225.00
Price Band A	225.00
Price Band B	225.00
Price Band C	225.00
-Unprotected Fast Ethernet	
N-MSA	225.00
Price Band A	225.00
Price Band B	225.00
Price Band C	225.00
-Unprotected D1 Video	
N-MSA	225.00
Price Band A	225.00
Price Band B	225.00
Price Band C	225.00

Service availability limited. Refer to # footnote on Page 20-281.

© 2022 Frontier Communications Parent, Inc. All rights reserved

20. Ethernet Private Line (Cont'd)

20.1 Dedicated SONET Optical Transport Service # (Cont'd)

(K) Rates and Charges (Cont'd)

(5) Optical Transport Channels
Multi-Port Interface (Cont'd)

(a) Monthly Rates (Cont'd)

(Jurisdiction: Illinois, Indiana, Michigan, North Carolina, Ohio, South Carolina, and Wisconsin) (C)

Interface Type	Category I Monthly Rate (C) 5-Year Term
Protected Multi-port Facility	
N-MSA	$3,000.00
Price Band A	3,000.00
Price Band B	3,000.00
Price Band C	3,000.00
Protected Multi-port Channels	
-Protected ESCON	
N-MSA	225.00
Price Band A	225.00
Price Band B	225.00
Price Band C	225.00
-Protected Fiber Channel	
N-MSA	225.00
Price Band A	225.00
Price Band B	225.00
Price Band C	225.00
-Protected FDDI	
N-MSA	225.00
Price Band A	225.00
Price Band B	225.00
Price Band C	225.00
-Protected Fast Ethernet	
N-MSA	225.00
Price Band A	225.00
Price Band B	225.00
Price Band C	225.00
-Protected D1 Video	
N-MSA	225.00
Price Band A	225.00
Price Band B	225.00
Price Band C	225.00

Service availability limited. Refer to # footnote on Page 20-281.

© 2022 Frontier Communications Parent, Inc. All rights reserved

20. Ethernet Private Line (Cont'd)

20.1 Dedicated SONET Optical Transport Service # (Cont'd)

(K) Rates and Charges (Cont'd)

(5) Optical Transport Channels
Multi-Port Interface (Cont'd)

(a) Monthly Rates (Cont'd)

(Jurisdiction: Illinois, Indiana, Michigan, North Carolina, Ohio, South Carolina, and Wisconsin) (C)

Interface Type	Category I Monthly Rate (C) 7-Year Term
Unprotected Multi-port Facility	
N-MSA	$2,200.00
Price Band A	2,200.00
Price Band B	2,200.00
Price Band C	2,200.00
Unprotected Multi-port Channels	
-Unprotected ESCON	
N-MSA	225.00
Price Band A	225.00
Price Band B	225.00
Price Band C	225.00
-Unprotected Fiber Channel	
N-MSA	225.00
Price Band A	225.00
Price Band B	225.00
Price Band C	225.00
-Unprotected FDDI	
N-MSA	225.00
Price Band A	225.00
Price Band B	225.00
Price Band C	225.00
-Unprotected Fast Ethernet	
N-MSA	225.00
Price Band A	225.00
Price Band B	225.00
Price Band C	225.00
-Unprotected D1 Video	
N-MSA	225.00
Price Band A	225.00
Price Band B	225.00
Price Band C	225.00

Service availability limited. Refer to # footnote on Page 20-281.

© 2022 Frontier Communications Parent, Inc. All rights reserved

20. Ethernet Private Line (Cont'd)

20.1 Dedicated SONET Optical Transport Service # (Cont'd)

(K) Rates and Charges (Cont'd)

(5) Optical Transport Channels
Multi-Port Interface (Cont'd)

(a) Monthly Rates (Cont'd)

(Jurisdiction: Illinois, Indiana, Michigan, North Carolina, Ohio, South Carolina, and Wisconsin)	Category I Monthly Rate	(C) (C) (C)
Interface Type	7-Year Term	
Protected Multi-port Facility		
N-MSA	$2,700.00	
Price Band A	2,700.00	
Price Band B	2,700.00	
Price Band C	2,700.00	
Protected Multi-port Channels		
-Protected ESCON		
N-MSA	225.00	
Price Band A	225.00	
Price Band B	225.00	
Price Band C	225.00	
-Protected Fiber Channel		
N-MSA	225.00	
Price Band A	225.00	
Price Band B	225.00	
Price Band C	225.00	
-Protected FDDI		
N-MSA	225.00	
Price Band A	225.00	
Price Band B	225.00	
Price Band C	225.00	
-Protected Fast Ethernet		
N-MSA	225.00	
Price Band A	225.00	
Price Band B	225.00	
Price Band C	225.00	
-Protected D1 Video		
N-MSA	225.00	
Price Band A	225.00	
Price Band B	225.00	
Price Band C	225.00	

Service availability limited. Refer to # footnote on Page 20-281.

© 2022 Frontier Communications Parent, Inc. All rights reserved

20. Ethernet Private Line (Cont'd)

20.1 Dedicated SONET Optical Transport Service # # (Cont'd)

(K) Rates and Charges (Cont'd)

(5) Optical Transport Channels
Multi Port Interface

(a) Monthly Rates

(Jurisdiction: Illinois, Indiana, Michigan, North Carolina, Ohio, South Carolina, and Wisconsin) (C)

Interface Type	Category II# Monthly Rate (C) 3-Year Term
Unprotected Multi-port Facility	
N-MSA	$3,330.00
Price Band A	3,330.00
Price Band B	3,330.00
Price Band C	3,330.00
Unprotected Multi-port Channels	
-Unprotected ESCON	
N-MSA	225.00
Price Band A	225.00
Price Band B	225.00
Price Band C	225.00
-Unprotected Fiber Channel	
N-MSA	225.00
Price Band A	225.00
Price Band B	225.00
Price Band C	225.00
-Unprotected FDDI	
N-MSA	225.00
Price Band A	225.00
Price Band B	225.00
Price Band C	225.00
-Unprotected Fast Ethernet	
N-MSA	225.00
Price Band A	225.00
Price Band B	225.00
Price Band C	225.00
-Unprotected D1 Video	
N-MSA	225.00
Price Band A	225.00
Price Band B	225.00
Price Band C	225.00

Category II rates are not eligible for the discounts applied under Contract Tariff Options 5 or 9 as set forth in Section 21 following.

Service availability limited. Refer to # footnote on Page 20-281.

© 2022 Frontier Communications Parent, Inc. All rights reserved

20. Ethernet Private Line (Cont'd)

20.1 Dedicated SONET Optical Transport Service # # (Cont'd)

(K) Rates and Charges (Cont'd)

(5) Optical Transport Channels
Multi Port Interface (Cont'd)

(a) Monthly Rates (Cont'd)

(Jurisdiction: Illinois, Indiana, Michigan, North Carolina, Ohio, South Carolina, and Wisconsin) (C)

Interface Type	Category II# Monthly Rate (C) 3-Year Term
Protected Multi-port Facility	
N-MSA	$4,000.00
Price Band A	4,000.00
Price Band B	4,000.00
Price Band C	4,000.00
Protected Multi-port Channels	
-Protected ESCON	
N-MSA	225.00
Price Band A	225.00
Price Band B	225.00
Price Band C	225.00
-Protected Fiber Channel	
N-MSA	225.00
Price Band A	225.00
Price Band B	225.00
Price Band C	225.00
-Protected FDDI	
N-MSA	225.00
Price Band A	225.00
Price Band B	225.00
Price Band C	225.00
-Protected Fast Ethernet	
N-MSA	225.00
Price Band A	225.00
Price Band B	225.00
Price Band C	225.00
-Protected D1 Video	
N-MSA	225.00
Price Band A	225.00
Price Band B	225.00
Price Band C	225.00

Category II rates are not eligible for the discounts applied under Contract Tariff Options 5 or 9 as set forth in Section 21 following.

Service availability limited. Refer to # footnote on Page 20-281.

© 2022 Frontier Communications Parent, Inc. All rights reserved

20. Ethernet Private Line (Cont'd)

20.1 Dedicated SONET Optical Transport Service # # (Cont'd)
(K) Rates and Charges (Cont'd)

(5) Optical Transport Channels
Multi-Port Interface (Cont'd)

(a) Monthly Rates (Cont'd)

(Jurisdiction: Illinois, Indiana, Michigan, North Carolina, Ohio, South Carolina, and Wisconsin) (C)

Interface Type	Category II# Monthly Rate (C) 5-Year Term
Unprotected Multi-port Facility	
N-MSA	$2,500.00
Price Band A	2,500.00
Price Band B	2,500.00
Price Band C	2,500.00
Unprotected Multi-port Channels	
-Unprotected ESCON	
N-MSA	225.00
Price Band A	225.00
Price Band B	225.00
Price Band C	225.00
-Unprotected Fiber Channel	
N-MSA	225.00
Price Band A	225.00
Price Band B	225.00
Price Band C	225.00
-Unprotected FDDI	
N-MSA	225.00
Price Band A	225.00
Price Band B	225.00
Price Band C	225.00
-Unprotected Fast Ethernet	
N-MSA	225.00
Price Band A	225.00
Price Band B	225.00
Price Band C	225.00
-Unprotected D1 Video	
N-MSA	225.00
Price Band A	225.00
Price Band B	225.00
Price Band C	225.00

Category II rates are not eligible for the discounts applied under Contract Tariff Options 5 or 9 as set forth in Section 21 following.
Service availability limited. Refer to # footnote on Page 20-281.

© 2022 Frontier Communications Parent, Inc. All rights reserved

20. Ethernet Private Line (Cont'd)

20.1 Dedicated SONET Optical Transport Service # # (Cont'd)

(K) Rates and Charges (Cont'd)

(5) Optical Transport Channels
Multi-Port Interface (Cont'd)

(a) Monthly Rates (Cont'd)

(Jurisdiction: Illinois, Indiana, Michigan, North Carolina, Ohio, South Carolina, and Wisconsin) (C)

Interface Type	Category II# Monthly Rate (C) 5-Year Term
Protected Multi-port Facility	
N-MSA	$3,000.00
Price Band A	3,000.00
Price Band B	3,000.00
Price Band C	3,000.00
Protected Multi-port Channels	
-Protected ESCON	
N-MSA	225.00
Price Band A	225.00
Price Band B	225.00
Price Band C	225.00
-Protected Fiber Channel	
N-MSA	225.00
Price Band A	225.00
Price Band B	225.00
Price Band C	225.00
-Protected FDDI	
N-MSA	225.00
Price Band A	225.00
Price Band B	225.00
Price Band C	225.00
-Protected Fast Ethernet	
N-MSA	225.00
Price Band A	225.00
Price Band B	225.00
Price Band C	225.00
-Protected D1 Video	
N-MSA	225.00
Price Band A	225.00
Price Band B	225.00
Price Band C	225.00

Category II rates are not eligible for the discounts applied under Contract Tariff Options 5 or 9 as set forth in Section 21 following.

Service availability limited. Refer to # footnote on Page 20-281.

© 2022 Frontier Communications Parent, Inc. All rights reserved

20. Ethernet Private Line (Cont'd)

20.1 Dedicated SONET Optical Transport Service # (Cont'd)

(K) Rates and Charges (Cont'd)

(5) Optical Transport Channels
Multi-Port Interface (Cont'd)

(a) Monthly Rates (Cont'd)

(Jurisdiction: Illinois, Indiana, Michigan, North Carolina, Ohio, South Carolina, and Wisconsin) (C)

Interface Type	Category II# Monthly Rate (C) 7-Year Term
Unprotected Multi-port Facility	
N-MSA	$2,200.00
Price Band A	2,200.00
Price Band B	2,200.00
Price Band C	2,200.00
Unprotected Multi-port Channels	
-Unprotected ESCON	
N-MSA	225.00
Price Band A	225.00
Price Band B	225.00
Price Band C	225.00
-Unprotected Fiber Channel	
N-MSA	225.00
Price Band A	225.00
Price Band B	225.00
Price Band C	225.00
-Unprotected FDDI	
N-MSA	225.00
Price Band A	225.00
Price Band B	225.00
Price Band C	225.00
-Unprotected Fast Ethernet	
N-MSA	225.00
Price Band A	225.00
Price Band B	225.00
Price Band C	225.00
-Unprotected D1 Video	
N-MSA	225.00
Price Band A	225.00
Price Band B	225.00
Price Band C	225.00

Category II rates are not eligible for the discounts applied under Contract Tariff Options 5 or 9 as set forth in Section 21 following.

Service availability limited. Refer to # footnote on Page 20-281.

© 2022 Frontier Communications Parent, Inc. All rights reserved

20. Ethernet Private Line (Cont'd)

20.1 Dedicated SONET Optical Transport Service # # (Cont'd)

(K) Rates and Charges (Cont'd)

(5) Optical Transport Channels
Multi-Port Interface (Cont'd)

(a) Monthly Rates (Cont'd)

(Jurisdiction: Illinois, Indiana, Michigan, North Carolina, Ohio, South Carolina, and Wisconsin) (C)

Interface Type	Category II# Monthly Rate (C) 7-Year Term
Protected Multi-port Facility	
N-MSA	$2,700.00
Price Band A	2,700.00
Price Band B	2,700.00
Price Band C	2,700.00
Protected Multi-port Channels	
-Protected ESCON	
N-MSA	225.00
Price Band A	225.00
Price Band B	225.00
Price Band C	225.00
-Protected Fiber Channel	
N-MSA	225.00
Price Band A	225.00
Price Band B	225.00
Price Band C	225.00
-Protected FDDI	
N-MSA	225.00
Price Band A	225.00
Price Band B	225.00
Price Band C	225.00
-Protected Fast Ethernet	
N-MSA	225.00
Price Band A	225.00
Price Band B	225.00
Price Band C	225.00
-Protected D1 Video	
N-MSA	225.00
Price Band A	225.00
Price Band B	225.00
Price Band C	225.00

Category II rates are not eligible for the discounts applied under Contract Tariff Options 5 or 9 as set forth in Section 21 following.

Service availability limited. Refer to # footnote on Page 20-281.

© 2022 Frontier Communications Parent, Inc. All rights reserved

20. Ethernet Private Line (Cont'd)

20.1 Dedicated SONET Optical Transport Service # (Cont'd)
(K) Rates and Charges (Cont'd)

(5) Optical Transport Channels
Multi-Port Interface (Cont'd)

(b) Nonrecurring Charges

(Jurisdiction: Illinois, (C)
Indiana, Michigan, North Carolina, Ohio, (C)
South Carolina, and Wisconsin) (C)

(1) Initial Installation Charge,
per optical transport channel

Interface Type	Category I Nonrecurring Charge
Unprotected Multi-Port Facility	
N-MSA	$1.00
Price Band A	1.00
Price Band B	1.00
Price Band C	1.00
Unprotected Multi-Port Channel	
ESCON	
N-MSA	1.00
Price Band A	1.00
Price Band B	1.00
Price Band C	1.00
Fiber Channel	
N-MSA	1.00
Price Band A	1.00
Price Band B	1.00
Price Band C	1.00
FDDI	
N-MSA	1.00
Price Band A	1.00
Price Band B	1.00
Price Band C	1.00
Fast Ethernet	
N-MSA	1.00
Price Band A	1.00
Price Band B	1.00
Price Band C	1.00
D1 Video	
N-MSA	1.00
Price Band A	1.00
Price Band B	1.00
Price Band C	1.00

Service availability limited. Refer to # footnote on Page 20-281.

© 2022 Frontier Communications Parent, Inc. All rights reserved

20. Ethernet Private Line (Cont'd)

20.1 Dedicated SONET Optical Transport Service # (Cont'd)
(K) Rates and Charges (Cont'd)

(5) Optical Transport Channels
Multi-Port Interface (Cont'd)

(b) Nonrecurring Charges (Cont'd)

(Jurisdiction: Illinois, (C)
Indiana, Michigan, North Carolina, Ohio, (C)
South Carolina, Wisconsin) (C)

(1) Initial Installation Charge,
per optical transport channel (Cont'd)

Interface Type	Category I Nonrecurring Charge
Protected Multi-Port Facility	
N-MSA	$1.00
Price Band A	1.00
Price Band B	1.00
Price Band C	1.00
Protected Multi-Port Channel	
-ESCON	
N-MSA	1.00
Price Band A	1.00
Price Band B	1.00
Price Band C	1.00
-Fiber Channel	
N-MSA	1.00
Price Band A	1.00
Price Band B	1.00
Price Band C	1.00
-FDDI	
N-MSA	1.00
Price Band A	1.00
Price Band B	1.00
Price Band C	1.00
-Fast Ethernet	
N-MSA	1.00
Price Band A	1.00
Price Band B	1.00
Price Band C	1.00
-D1 Video	
N-MSA	1.00
Price Band A	1.00
Price Band B	1.00
Price Band C	1.00

Service availability limited. Refer to # footnote on Page 20-281.

© 2022 Frontier Communications Parent, Inc. All rights reserved

20. Ethernet Private Line (Cont'd)

20.1 Dedicated SONET Optical Transport Service # (Cont'd)
(K) Rates and Charges (Cont'd)

(5) Optical Transport Channels
Multi-Port Interface (Cont'd)

(b) Nonrecurring Charges (Cont'd)

(Jurisdiction: Illinois, (C)
Indiana, Michigan, North Carolina, Ohio, (C)
South Carolina, and Wisconsin) (C)

(1) Initial Installation Charge,
per optical transport channel (Cont'd)

Interface Type	Category II Nonrecurring Charge
Unprotected Multi-Port Facility	
N-MSA	$1.00
Price Band A	1.00
Price Band B	1.00
Price Band C	1.00
Unprotected Multi-Port Channel	
ESCON	
N-MSA	1.00
Price Band A	1.00
Price Band B	1.00
Price Band C	1.00
Fiber Channel	
N-MSA	1.00
Price Band A	1.00
Price Band B	1.00
Price Band C	1.00
FDDI	
N-MSA	1.00
Price Band A	1.00
Price Band B	1.00
Price Band C	1.00
Fast Ethernet	
N-MSA	1.00
Price Band A	1.00
Price Band B	1.00
Price Band C	1.00
D1 Video	
N-MSA	1.00
Price Band A	1.00
Price Band B	1.00
Price Band C	1.00

Service availability limited. Refer to # footnote on Page 20-281.

© 2022 Frontier Communications Parent, Inc. All rights reserved

20. Ethernet Private Line (Cont'd)

20.1 Dedicated SONET Optical Transport Service # (Cont'd)
(K) Rates and Charges (Cont'd)

(5) Optical Transport Channels
Multi-Port Interface (Cont'd)

(b) Nonrecurring Charges (Cont'd)

(Jurisdiction: Illinois, (C)
Indiana, Michigan, North Carolina, Ohio, (C)
South Carolina, and Wisconsin) (C)

(1) Initial Installation Charge,
per optical transport channel (Cont'd)

Interface Type	Category II Nonrecurring Charge
Protected Multi-Port Facility	
N-MSA	$1.00
Price Band A	1.00
Price Band B	1.00
Price Band C	1.00
Protected Multi-Port Channel	
-ESCON	
N-MSA	1.00
Price Band A	1.00
Price Band B	1.00
Price Band C	1.00
-Fiber Channel	
N-MSA	1.00
Price Band A	1.00
Price Band B	1.00
Price Band C	1.00
-FDDI	
N-MSA	1.00
Price Band A	1.00
Price Band B	1.00
Price Band C	1.00
-Fast Ethernet	
N-MSA	1.00
Price Band A	1.00
Price Band B	1.00
Price Band C	1.00
-D1 Video	
N-MSA	1.00
Price Band A	1.00
Price Band B	1.00
Price Band C	1.00

Service availability limited. Refer to # footnote on Page 20-281.

© 2022 Frontier Communications Parent, Inc. All rights reserved

20. Ethernet Private Line (Cont'd)
20.1 Dedicated SONET Optical Transport Service # (Cont'd)
(K) Rates and Charges (Cont'd)

(5) Optical Transport Channels
Multi-Port Interface (Cont'd)

(b) Nonrecurring Charges (Cont'd)

(Jurisdiction: Illinois, (C)
Indiana, Michigan, North Carolina, Ohio, (C)
South Carolina, and Wisconsin) (C)

(2) Subsequent Installation Charge,
per optical transport channel

Interface Type	Category I Nonrecurring Charge
Unprotected Multi-Port Facility	
N-MSA	$1.00
Price Band A	1.00
Price Band B	1.00
Price Band C	1.00
Unprotected Multi-Port Channel	
-ESCON	
N-MSA	1.00
Price Band A	1.00
Price Band B	1.00
Price Band C	1.00
-Fiber Channel	
N-MSA	1.00
Price Band A	1.00
Price Band B	1.00
Price Band C	1.00
-FDDI	
N-MSA	1.00
Price Band A	1.00
Price Band B	1.00
Price Band C	1.00
-Fast Ethernet	
N-MSA	1.00
Price Band A	1.00
Price Band B	1.00
Price Band C	1.00
-D1 Video	
N-MSA	1.00
Price Band A	1.00
Price Band B	1.00
Price Band C	1.00

Service availability limited. Refer to # footnote on Page 20-281.

© 2022 Frontier Communications Parent, Inc. All rights reserved

20. Ethernet Private Line (Cont'd)
20.1 Dedicated SONET Optical Transport Service # (Cont'd)
(K) Rates and Charges (Cont'd)
(5) Optical Transport Channels
Multi-Port Interface (Cont'd)

(b) Nonrecurring Charges (Cont'd)

(Jurisdiction: Illinois, (C)
Indiana, Michigan, North Carolina, Ohio, (C)
South Carolina, and Wisconsin) (C)

(2) Subsequent Installation Charge,
per optical transport channel (Cont'd)

Interface Type	Category I Nonrecurring Charge
Protected Multi-Port Facility	
N-MSA	$1.00
Price Band A	1.00
Price Band B	1.00
Price Band C	1.00
Protected Multi-Port Channel	
-ESCON	
N-MSA	1.00
Price Band A	1.00
Price Band B	1.00
Price Band C	1.00
-Fiber Channel	
N-MSA	1.00
Price Band A	1.00
Price Band B	1.00
Price Band C	1.00
-FDDI	
N-MSA	1.00
Price Band A	1.00
Price Band B	1.00
Price Band C	1.00
-Fast Ethernet	
N-MSA	1.00
Price Band A	1.00
Price Band B	1.00
Price Band C	1.00
-D1 Video	
N-MSA	1.00
Price Band A	1.00
Price Band B	1.00
Price Band C	1.00

Service availability limited. Refer to # footnote on Page 20-281.

© 2022 Frontier Communications Parent, Inc. All rights reserved

20. Ethernet Private Line (Cont'd)
20.1 Dedicated SONET Optical Transport Service # (Cont'd)
(K) Rates and Charges (Cont'd)

(5) Optical Transport Channels
Multi-Port Interface (Cont'd)

(b) Nonrecurring Charges (Cont'd)

(Jurisdiction: Illinois, (C)
Indiana, Michigan, North Carolina, Ohio, (C)
South Carolina, and Wisconsin) (C)

(2) Subsequent Installation Charge,
per optical transport channel (Cont'd)

Interface Type	Category II Nonrecurring Charge
Unprotected Multi-Port Facility	
N-MSA	$1.00
Price Band A	1.00
Price Band B	1.00
Price Band C	1.00
Unprotected Multi-Port Channel	
-ESCON	
N-MSA	1.00
Price Band A	1.00
Price Band B	1.00
Price Band C	1.00
-Fiber Channel	
N-MSA	1.00
Price Band A	1.00
Price Band B	1.00
Price Band C	1.00
-FDDI	
N-MSA	1.00
Price Band A	1.00
Price Band B	1.00
Price Band C	1.00
-Fast Ethernet	
N-MSA	1.00
Price Band A	1.00
Price Band B	1.00
Price Band C	1.00
-D1 Video	
N-MSA	1.00
Price Band A	1.00
Price Band B	1.00
Price Band C	1.00

Service availability limited. Refer to # footnote on Page 20-281.

© 2022 Frontier Communications Parent, Inc. All rights reserved

20. Ethernet Private Line (Cont'd)

20.1 Dedicated SONET Optical Transport Service # (Cont'd)
(K) Rates and Charges (Cont'd)

(5) Optical Transport Channels
Multi-Port Interface (Cont'd)

(b) Nonrecurring Charges (Cont'd)

(Jurisdiction: Illinois, (C)
Indiana, Michigan, North Carolina, Ohio, (C)
South Carolina, and Wisconsin) (C)

(2) Subsequent Installation Charge,
per optical transport channel (Cont'd)

Interface Type	Category II Nonrecurring Charge
Protected Multi-Port Facility	
N-MSA	$1.00
Price Band A	1.00
Price Band B	1.00
Price Band C	1.00
Protected Multi-Port Channel	
-ESCON	
N-MSA	1.00
Price Band A	1.00
Price Band B	1.00
Price Band C	1.00
-Fiber Channel	
N-MSA	1.00
Price Band A	1.00
Price Band B	1.00
Price Band C	1.00
-FDDI	
N-MSA	1.00
Price Band A	1.00
Price Band B	1.00
Price Band C	1.00
-Fast Ethernet	
N-MSA	1.00
Price Band A	1.00
Price Band B	1.00
Price Band C	1.00
-D1 Video	
N-MSA	1.00
Price Band A	1.00
Price Band B	1.00
Price Band C	1.00

Service availability limited. Refer to # footnote on Page 20-281.

© 2022 Frontier Communications Parent, Inc. All rights reserved

20. Ethernet Private Line (Cont'd

20.1 Dedicated SONET Optical Transport Service # (Cont'd)

(L) Network Management Methods

The customer has the option of purchasing one of the following Network Management Methods for use with a Special Access DSOTS network provided by the Telephone Company in accordance with this Section 20.1. Only one of these features may be provided on a single DSOTS. In order to purchase one of the features, the customer must be subscribed to DSOTS and must use such DSOTS in conjunction with the selected feature.

- Customer Service Management (CSM) Optional Feature, as set forth in (L)(1) following
- Direct TL1 Monitoring (DTM) Optional Feature , as set forth in (L)(2) following

(1) Customer Service Management (CSM) Optional Feature

(a) Description

CSM provides a customer with real time information about the operational status of its DSOTS network. CSM provides a network view of real-time detection and reporting of network alarm conditions within the customer's DSOTS network. In addition, CSM provides the ability for the customer to generate basic network performance reports for its DSOTS network. The customer may also request network performance reports that are customized to meet their specific needs under Section 20.1(L)(3)(a) following.

(b) Application of Rates and Charges

(1.) A CSM monthly recurring charge applies, per full or partial ring, for each DSOTS provided with the CSM optional feature.

(2.) A Node Setup charge applies, per primary or expansion node, for each node that is equipped with CSM at the time that CSM is initially established on the DSOTS.

(3.) An Initial CSM Setup charge applies for establishment of the customer's initial CSM database partition. The initial CSM database partition includes setup for up to six (6) users.

(4.) A Setup of Additional Users charge applies for the setup of up to six (6) additional users beyond those provided with the initial or additional database partitions

(5.) A Setup of Additional Partition charge applies for the setup of an additional CSM database partition created for the same customer. Each additional CSM database partition provides for the setup of up to six (6) additional users.

Service availability limited. Refer to # footnote on Page 20-281.

© 2022 Frontier Communications Parent, Inc. All rights reserved

20. Ethernet Private Line (Cont'd

20.1 Dedicated SONET Optical Transport Service # (Cont'd)

(L) Network Management Methods (Cont'd)

(1) Customer Service Management (CSM) Optional Feature (Cont'd)

(b) Application of Rates and Charges (Cont'd)

(6.) An Add/Remove Node charge applies, per primary and expansion node, for each node that is added to, or removed from, a DSOTS ring equipped with CSM subsequent to the initial establishment of CSM. This charge also applies, per primary and expansion node, when the customer requests a change in Network Management Method (e.g., from CSM to DTM).

(7.) A Consultation and Support charge applies for each thirty (30) minutes or fraction thereof that the customer requests Telephone Company consultation and support of its CSM network. This charge does not apply during initial setup of CSM.

(c) Rate Regulations

(1) CSM is provided under a term plan of 3 years, 5 years or 7 years, as described following.

- The duration of the term plan for CSM must be the same duration as the term plan for the DSOTS nodes provided with CSM. At the expiration of its 3, 5 or 7 year term plans for CSM, the customer has the option of extending CSM with a coterminous end date as described following

- The expiration date of each CSM added subsequent to the initial installation must be coterminous to the expiration date of the associated DSOTS, provided the addition is prior to the 21st month for a 3-year plan, prior to the 36th month for a 5-year plan, or prior to the 50th month for a 7-year plan. A CSM added after the aforementioned periods requires extension of the commitment period for the associated DSOTS in accordance with 20.1 preceding. Such extension results in the establishment of a new plan that includes both the DSOTS and the CSM optional feature under the same plan with the same expiration date.

(2) The customer may retrieve basic reports containing performance-monitoring information on its DSOTS network. Basic reports are available at no additional charge to the customer. The customer may also request that a report be customized to meet its particular needs. Rates and charges for customized reports are provided on an individual case basis (ICB) only.

Service availability limited. Refer to # footnote on Page 20-281.

© 2022 Frontier Communications Parent, Inc. All rights reserved

20. Ethernet Private Line (Cont'd

20.1 Dedicated SONET Optical Transport Service #(Cont'd)

(L) Network Management Methods (Cont'd)

(1) Customer Service Management (CSM) Optional Feature (Cont'd)

(c) Rate Regulations (Cont'd)

(3.) CSM is subject to termination liability if the service is disconnected prior to completion of the existing commitment period. The terms and conditions in (d) following apply to termination of CSM prior to completion of the existing commitment period. Changes in Network Management Method (e.g., from CSM to DTM) will be made without termination liability subject to the Add/Remove Node charge set forth in (1)(b)(6) preceding.

(d) Terms and Conditions

The customer must utilize Internet web access to connect its customer-provided terminal equipment to the Telephone Company's CSM management system. Access to the internet and any associated rates and charges are the responsibility of the customer. The customer is also responsible for obtaining communications software that is compatible with the software the Telephone Company utilizes to provide CSM. The Telephone Company will work cooperatively with the customer to determine compatibility of its communications software.

- Subject to the restrictions set forth in (L)(1)(c)(1) preceding, CSM is provided coincident with the installation of the associated DSOTS ring or may be added to an existing ring.

Service availability limited. Refer to # footnote on Page 20-281.

© 2022 Frontier Communications Parent, Inc. All rights reserved

20. Ethernet Private Line (Cont'd

20.1 Dedicated SONET Optical Transport Service # (Cont'd)

(L) Network Management Methods (Cont'd)

(2) Direct TL1 Monitoring (DTM) Optional Feature

(a) Description

(1.) DTM provides a customer with near real time information about the operational status of its DSOTS network over a TL1 connection. A TL1 connection is a machine-to-machine communication language protocol. The connection allows a customer to monitor its DSOTS network via a limited set of executable TL1 commands in order to query alarm and performance criteria.

(a.) DTM enables the following:

- Near real time access to autonomous alarms and performance messages originating from the customer's DSOTS network elements.

- Query and response capability that enables two-way communications with the capability to poll and retrieve messages, such as command alarms and performance messages.

- Access to ring inventory information that will enable the customer to maintain its own inventory database containing network element configurations and usage records for active service channels.

- Notification that a power failure has occurred at a DSOTS network element and that the affected network element has reverted to battery backup.

- Ability to monitor the ring, as well as all service channels riding the ring.

Service availability limited. Refer to # footnote on Page 20-281.

© 2022 Frontier Communications Parent, Inc. All rights reserved

20. Ethernet Private Line (Cont'd

20.1 Dedicated SONET Optical Transport Service # (Cont'd)

(L) Network Management Methods (Cont'd)

(2) Direct TL1 Monitoring (DTM) Optional Feature (Cont'd)

(b) Application of Rates and Charges

(1.) A DTM monthly recurring rate applies for each DSOTS provided with the DTM optional feature.

(2.) A Node Setup charge applies, per primary or expansion node, for each node that is equipped with DTM at the time that DTM is initially established on the DSOTS.

(3.) An Initial DTM Set-Up charge applies for the establishment of the customer's initial DTM database partition.

(4.) An Add/Remove Node charge applies, per primary and expansion node, for each node that is added to, or removed from, a DSOTS ring equipped with DTM subsequent to the initial establishment of DTM. This charge also applies, per primary and expansion node, when the customer requests a change in Network Management Method (e.g., from DTM to CSM).

(5.) A Consultation and Support charge applies for each thirty (30) minutes or fraction thereof that the customer requests Telephone Company consultation and support of its DTM network. This charge does not apply during initial setup of DTM.

(c) Rate Regulations

(1.) DTM is provided under a term plan of 3 years, 5 years or 7 years, as described following.

- The duration of the term plan for DTM must be the same duration as the term plan for the DSOTS nodes provided with DTM. At the expiration of its 3, 5 or 7 year term plans for DTM, the customer has the option of extending DTM with a coterminous end date as described following.

- The expiration date of each DTM added subsequent to the initial installation must be coterminous to the expiration date of the associated DSOTS, provided the addition is prior to the 21st month for a 3-year plan, prior to the 36th month for a 5-year plan, or prior to the 50th month for a 7-year plan. A DTM added after the aforementioned periods requires extension of the commitment period for the associated DSOTS in accordance with 20.1 preceding. Such extension results in the establishment of a new plan that includes both the DSOTS and the DTM under the same plan with the same expiration date

Service availability limited. Refer to # footnote on Page 20-281.

© 2022 Frontier Communications Parent, Inc. All rights reserved

20. Ethernet Private Line (Cont'd

20.1 Dedicated SONET Optical Transport Service # (Cont'd)

(L) Network Management Methods (Cont'd)

(2) Direct TL1 Monitoring (DTM) Optional Feature (Cont'd)

(c) Rate Regulations (Cont'd)

(2.) Termination liability will apply if DTM is removed prior to completion of the existing commitment period. The terms and conditions in 20.1(E) preceding apply to termination of DTM prior to completion of the existing commitment period. Changes in Network Management Method (e.g., from DTM to CSM) will be made without termination liability subject to the Add/Remove Node charge set forth in (2)(b)(4) preceding

(d) Terms and Conditions

(1.) The customer must order two (2) Special Access Services as provided by the Telephone Company under Section 5 or provided by another carrier, in order to ensure secure, dedicated private line access and enable full redundancy for DTM. These Special Access lines must originate at the customer's designated premises and terminate at a DTM site designated by the Telephone Company with the terms and conditions of this Guide. The customer is responsible for procuring any additional services that may be necessary to connect the Special Access Service to the customer's designated premises.

(2.) When requested by the customer, and where technically feasible to do so, the Telephone Company will provide encryption capabilities on the Special Access Services used to access DTM. The Telephone Company will specify any equipment or software required to provide encryption. Obtaining such equipment or software is the responsibility of the customer. The customer is also responsible for:

- security of any equipment, servers, systems or other facilities provided by the customer and which have access to the DTM network; and
- monitoring access to the DTM service using the facilities, systems, equipment or servers provided by the customers.

Service availability limited. Refer to # footnote on Page 20-281.

© 2022 Frontier Communications Parent, Inc. All rights reserved

20. Ethernet Private Line (Cont'd

20.1 Dedicated SONET Optical Transport Service # (Cont'd)

(L) Network Management Methods (Cont'd)

(3) Rates and Charges, Customer Service management Optional Feature (CSM)
Jurisdiction: Illinois, Indiana, Michigan, North Carolina, (C)
Ohio, South Carolina, and Wisconsin) (C)

(a)	CSM, per primary ring		Monthly Rate
	3 year		$450.00
	5 year		450.00
	7 year		450.00
	Customized Reports	(NOTE)	ICB
			Nonrecurring Charge
(b)	Node Setup, per node (pri & exp) on the ring equipped during initial CSM Method establishment		$200.00
(c)	Initial CSM Method Setup, first partition with up to 6 users		500.00
(d)	Setup of Additional CSM Method Partition		500.00
(e)	Setup of Additional Users, up to 6 additional users		350.00
(f)	Add/Remove Node, per primary or expansion node added to, or removed from, the CSM ring subsequent to initial establishment or for a Change in Network Management Method		200.00
(g)	Consultation and Support, each 30 minutes or fraction thereof		100.00
(h)	Change Network Management Method from CSM to DTM, per node		200.00

Service availability limited. Refer to # footnote on Page 20-281.

© 2022 Frontier Communications Parent, Inc. All rights reserved

20. Ethernet Private Line (Cont'd

20.1 Dedicated SONET Optical Transport Service # (Cont'd)

(L) Network Management Methods (Cont'd)

(4) Rates and Charges, Direct TL1 Monitoring Optional Feature (DTM)
Jurisdiction: Illinois, Indiana, Michigan, North Carolina, (C)
Ohio, South Carolina, and Wisconsin) (C)

(a) DTM, per primary ring

	Monthly Rate
3 year	$450.00
5 year	450.00
7 year	450.00

	Nonrecurring Charge
(b) Node Setup, primary or expansion node on the ring equipped during initial establishment	$200.00
(c) Initial DTM Setup, first partition with up to 6 users	500.00
(d) Add/Remove Node, per primary or expansion node added to, or removed from, the DTM ring subsequent to initial establishment or for a Change In Network Management method	200.00
(e) Consultation and Support, each 30 minutes or fraction thereof	100.00
(f.) Change Network Management Method, from DTM to CSM, per node	200.00

Service availability limited. Refer to # footnote on Page 20-281.

© 2022 Frontier Communications Parent, Inc. All rights reserved

20. Ethernet Private Line (Cont'd)

20.2 Dedicated SONET Ring (DSR) #

(A) General

(1) Dedicated SONET Ring (DSR) provides a customer a dedicated high capacity customized network. The network is in a ring architecture or topology that assures survivability. Full rings may subtend (interconnect with) each other as described in (B)(4) following.

(2) DSR is an alternative to basic High Capacity Special Access point-to-point services between multiple customer locations. It is, therefore, rated discretely. Rate elements include enhanced nodes, ports and mileage between enhanced nodes. Rates are specified in 20.2(K) following.

(3) Definitions

Add/Drop Multiplexing, (ADM): a multiplexing function that allows lower level signals to be added or dropped from an optical carrier channel.

Enhanced node: a DSR rate element and a designation of either a customer location or Company wire center on a SONET ring that has Next Generation Add Drop Multiplexer (NGADM) capability. It is also the address of where a channelized (lower speed) service originates or terminates on a ring. Generally, the ring capacity determines the type of node.

Fiber path diversity: the provision of service using at least two fibers placed on physically separate paths, i.e., different conduit runs that do not pass through the same manhole(s). The cable paths are separated by at least 25 feet.

The following footnote is not applicable to the DS1, DS3, DS3 Transmux or STS1 Port, DS1, DS3 or STS1 Partial Ring Channel Mapping rate elements of DSR. Effective May 31, 2007, orders for new DSR are no longer permitted. The Telephone Company will continue to provide DSR pursuant to this Section 20.2 on any existing DSR that is in-service as of May 31, 2007, or any order for DSR that is placed with the Telephone Company prior to May 31, 2007 (collectively, Existing DSR), subject to the following conditions:

a. For any Existing DSR that is currently subscribed to a term plan (i.e., commitment periods of 3-, 5-, and 7-years), the Telephone Company will continue to provide the Existing DSR for an additional six (6) months beyond the expiration date of the customer's current commitment period, or until the customer replaces the Existing DSR with a comparable Telephone Company provided service, or discontinues service, whichever comes first. Subject to the availability of facilities and equipment, additions and/or changes to the Existing DSR are permitted during the current commitment period provided that such additions do not require a new commitment period or an extension to an existing commitment period.

b. For any Existing DSR whose term plan expired prior to May 31, 2007, but the Existing DSR continued on a month-to-month basis at prevailing rates, the Telephone Company will continue to provide the Existing DSR until November 30, 2007, or until the customer replaces the Existing DSR with a comparable Telephone Company provided service, or discontinues service, whichever comes first. Additions and/or changes are not permitted.

© 2022 Frontier Communications Parent, Inc. All rights reserved

20. Ethernet Private Line (Cont'd)

20.2 Dedicated SONET Ring (DSR) #

(A) General

(3) Definitions (Cont'd)

Optical Carrier Rate, (OCn#): a SONET transmission signal/speed, line rate, or service. The rates are in multiples of an OC1, which is equivalent to an STS1 (51.84 Mbps), SONET's basic rate.

OC(#) Rate	Bandwidth Capacity
3	155.52 Mbps
12	622.08 Mbps
48	2.488 Gbps
192	9.952 Gbps

Optical Carrier Rate Concatenated, (OCn#c): a "clear channel" SONET transmission using only one framing format. Generally, an OC3 signal provides three STS1s frame formats with 3 overheads for a total capacity of 2268 bytes per Synchronous Payload envelope (SPE) frame; in an OC3c signal, one STS3c frame format is used with one overhead, increasing the total payload capacity to 2340 bytes per SPE frame.

OC48+3,OC192+3,OC192+12,and OC192+48: designations for enhanced nodes in ring-on-ring designs; the higher speed NGADM is part of the true ring, and the lower speed NGADM is connected for the purpose of mapping lower speed services onto the STS1s of the OC12, OC48 or OC192. Both nodes, the lower and higher speed node, of a ring-on-ring arrangement must be located in the same customer premises or wire center.

Port: a DSR rate element that denotes the interface at which a channelized or lower speed service terminates or originates at a DSR node.

Service availability limited. Refer to # footnote on Page 20-405.

© 2022 Frontier Communications Parent, Inc. All rights reserved

20. Ethernet Private Line (Cont'd)

20.2 Dedicated SONET Ring (DSR) #(Cont'd)

(A) General (Cont'd)

(3) Definitions (Cont'd)

Port Node: an arrangement on a DSR that interconnects the main DSR ring with a subtending DSR ring.

SONET, (Synchronous Optical NETwork): an international standard for the transmission of high capacity bandwidth over optical facilities. This synchronous transmission platform utilizes a modular multiplexing approach. Because of the large bandwidth, some of the payload is used to monitor, protect, manage and improve the transmission of the signal.

Subtending Ring: a DSR Service that subtends (interconnects with) a DSR main ring.

Synchronous Transport Signal Level, (STS1): a 51.84 Mbps signal that is the electrical equivalent of the OC1 or a DS3 with additional Mbps devoted to SONET overhead information. An STS1 can carry a DS3 or 28 DS1s when specifically formatted (Mapped). These DS1s may be accessed off-ring using the tariffed DS3 to DS1 multiplexing optional service or at an enhanced node via a DSR DS3 Transmux Port.

Virtual Tributary, (VT): A SONET structure designed for transport of sub-STS1 payloads. A DS1 is mapped into the SONET format using a VT1.5 as a packaging mechanism that is internal to the SONET signal.

GigE: an Ethernet circuit offered at the port level over DSR rings. Ethernet frames are mapped into STS1, STS-N, STS1-Nv or STS-Nc SONET frames.

GigE Channel	Transport Bandwidth	Approximate Throughput	Effective SONET Payload Capacity
GigE-1	(1) STS1 or STS1-1v	50 Mbps	49.536 Mbps
GigE-3	(1) STS-3 or STS1-3v	150 Mbps	149.760 Mbps
GigE-6	(1) STS-6 or STS1-6v	300 Mbps	299.520 Mbps
GigE-9	(1) STS-9 or STS1-9v	450 Mbps	449.280 Mbps
GigE-12	(1) STS-12 or STS1-12v	600 Mbps	599.040 Mbps
GigE-24	(1) STS1-21v	1000 Mbps	984.960 Mbps
GigE-24	(1) STS-24	1000 Mbps	1,198.080 Mbps

Service availability limited. Refer to # footnote on Page 20-405.

© 2022 Frontier Communications Parent, Inc. All rights reserved

20. Ethernet Private Line (Cont'd)

20.2 Dedicated SONET Ring (DSR) #

(B) Service Description

(1) Full Ring

(a) DSR may provide connectivity to multiple customer designated locations (nodes). The minimum node requirement for a full ring DSR is as follows:

(1) For DSR rings provided wholly by the Telephone Company, the ring must be configured with a minimum of three nodes that are provided by the Telephone Company and are at different locations. One or more full rings may interconnect with each other in a subtending ring configuration as described in (B)(4) following. At least one of these nodes must be located in a Telephone Company central office (CO) and one must be located at a customer's designated location; or

(2) For DSR rings provided jointly by the Telephone Company and one or more other exchange telephone companies, the ring must be configured with a minimum of three nodes. A minimum of one node must be provided by the Telephone Company with that node being located in a Telephone Company CO and the remaining nodes may be provided by one or more of the other exchange telephone companies jointly providing the service. If more than one node is provided by the Telephone Company, the additional nodes may be located at either a customer designated location or in a Telephone Company CO. Jointly provided DSR rings must meet all of the same requirements that are set forth in this Guide for wholly provided DSR rings. This configuration is only allowed when the DSR ring is jointly provided by the Telephone Company and one or more other exchange telephone companies in a multiple company billing arrangement as set forth in Section 2.7.3.

Service availability limited. Refer to # footnote on Page 20-405.

© 2022 Frontier Communications Parent, Inc. All rights reserved

20. Ethernet Private Line (Cont'd)

20.2 Dedicated SONET Ring (DSR) #(Cont'd)

(B) Service Description (Cont'd)

(1) Full Ring (Cont'd)

(b) An example of a full Dedicated SONET Ring (DSR) is diagrammed below:

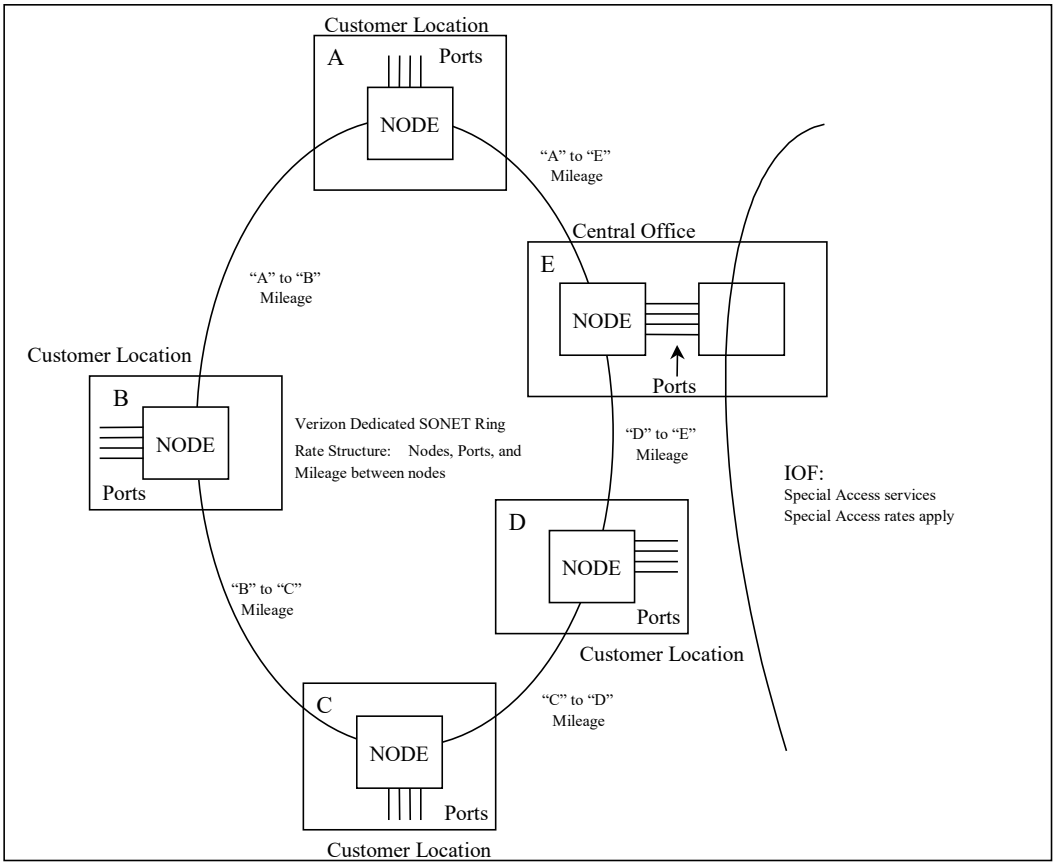

Service availability limited. Refer to # footnote on Page 20-405.

© 2022 Frontier Communications Parent, Inc. All rights reserved

20. Ethernet Private Line (Cont'd)

20.2 Dedicated SONET Ring (DSR) #(Cont'd)

(B) Service Description (Cont'd)

(2) Partial Ring

(a) A partial DSR ring provides connectivity to multiple customer designated locations (nodes) between fiber meet locations at which high speed interconnection of the Telephone Company's backbone network facilities to the customer's facilities or the facilities of a third party occurs. Partial ring service may only be interconnected to (1) another partial ring provided by the Telephone Company or (2) ring facilities provided by the customer or third party. Subtending rings may not interconnect with, or be associated with, a partial ring. The portion of the ring provided by the customer or third party must use vendor equipment that matches the equipment used by the Telephone Company and must maintain the same vintage in software release as the Telephone Company. Upon written notice by the Telephone Company, the customer or third party will have sixty (60) days in which to complete the change out of any software release deployed by the Telephone Company.

(b) The partial ring must have a minimum of two devices provided by the Telephone Company (enhanced nodes or high speed interfaces) with a device at each fiber meet location and at least one node on the partial ring must be in a CO. When the partial ring is provided over an Dedicated SONET Optical Transport Service (DSOTS) or a Telephone Company provided DWDM ring service, the DSOTS/DWDM ring service device(s) are counted towards satisfying the minimum device requirement at each fiber meet location on the DSR partial ring. High speed interconnection may occur at a customer's designated premises, a Telephone Company central office or a location that is mutually agreeable to both the customer and the Telephone Company (such location will be designated as a premises for the purpose of administering the general regulations set forth in this Guide).

(c) Fiber Meet

(1) When the fiber meet occurs at a customer's designated premises, the point of interconnection between the Telephone Company's facilities and the facilities of the customer or of a third party shall be a node.

(2) When the fiber meet occurs in a Telephone Company wire center, high speed interconnection from the device (DSR node, DSOTS/DWDM ring service node or DSOTS/DWDM ring service amplifier, as applicable) occurs at a collocation arrangement via fiber cross-connects between the Telephone Company's fiber optic facilities and the customer’s or third party’s facilities. Fiber Cross-connects are provided under Section 18.2 preceding.

Service availability limited. Refer to # footnote on Page 20-405.

© 2022 Frontier Communications Parent, Inc. All rights reserved

20. Ethernet Private Line (Cont'd)

20.2 Dedicated SONET Ring (DSR) # (Cont'd)

(B) Service Description (Cont'd)

(2) Partial Ring (Cont'd)

(c) Fiber Meet (Cont'd)

(3) When the fiber meet occurs at a mutually agreed upon location, the point of interconnection shall be a high speed (pass-through) interface.

(4) The Telephone Company's network design will define the optical parameters at the fiber meet locations. The Telephone Company is responsible for the quality and integrity of the high speed optical signal at the fiber meet where its facilities are interconnected to the facilities of the customer or of the third party. The Telephone Company bears no responsibility for the optical parameters beyond the fiber meet (i.e., in the facilities of the customer or of the third party). In the case of DSR ring that is jointly provided by the Telephone Company and one or more other exchange telephone companies in a multiple billing arrangement, as set forth in Section 2.7.3 preceding, the overall design and configuration of the DSR ring must be mutually agreeable to the Telephone Company, any other exchange telephone company(s) involved, and to the customer. The customer or third party is responsible for engineering its portion of the jointly provided ring. At customer or third-party's option, the Telephone Company will engineer the customer or third party's portion of the ring within the LATA subject to charges for Additional Labor as set forth in Section 6 preceding.

Service availability limited. Refer to # footnote on Page 20-405.

© 2022 Frontier Communications Parent, Inc. All rights reserved

20. Ethernet Private Line (Cont'd)

20.2 Dedicated SONET Ring (DSR) # (Cont'd)

(B) Service Description (Cont'd)

(2) Partial Ring (Cont'd)

(c) Fiber Meet (Cont'd)

(5) The customer must provide the Telephone Company with its fiber optic facility requirements (i.e., whether it will use single mode fiber or multi-mode fiber) prior to the Telephone Company ordering the necessary SONET network equipment to provide the requested service. The customer may utilize its own fiber optic facilities or the facilities of a third party.

(6) Interconnection to DSR partial ring services may occur (i) at the customer's designated premises for which interconnection will occur via a node; (ii) in a Telephone Company wire center for which interconnection from a device will occur at a collocation arrangement via fiber cross-connects as described in Section 18 preceding; or (iii) at a mutually agreed upon location where interconnection occurs via a high speed (pass-through) interface. Interconnection to other Telephone Company services may not occur at the mutually agreed upon fiber meet location utilizing a high speed interface.

(7) Interconnection to DSR partial ring service is limited to high speed fiber interconnection of the Telephone Company's backbone network fiber optic facilities and the fiber optic facilities of the customer or of a third party.

Service availability limited. Refer to # footnote on Page 20-405.

© 2022 Frontier Communications Parent, Inc. All rights reserved

20. Ethernet Private Line (Cont'd)

20.2 Dedicated SONET Ring (DSR) # (Cont'd)

(B) Service Description (Cont'd)

(2) Partial Ring (Cont'd)

(d) When ordering lower speed channels that originate at and terminate to nodes which are not within the partial ring provided by the Telephone Company, the customer must provide the Telephone Company with a copy of the order. This order provides the Telephone Company with authority to perform the necessary mapping of the channel through the partial ring to ensure continuity of the signal over the jointly provided ring. A Channel Mapping nonrecurring charge will apply for each channel mapped through the Telephone Company provided partial ring. Channel mapping charges do not apply when ordering channels that originate at and/or terminate to nodes on the Telephone Company's portion of the partial ring.

Service availability limited. Refer to # footnote on Page 20-405.

© 2022 Frontier Communications Parent, Inc. All rights reserved

20. Ethernet Private Line (Cont'd)

20.2 Dedicated SONET Ring (DSR) # (Cont'd)

(B) Service Description (Cont'd)

(2) Partial Ring (Cont'd)

(e) An example of a partial Dedicated SONET Ring is diagrammed below:

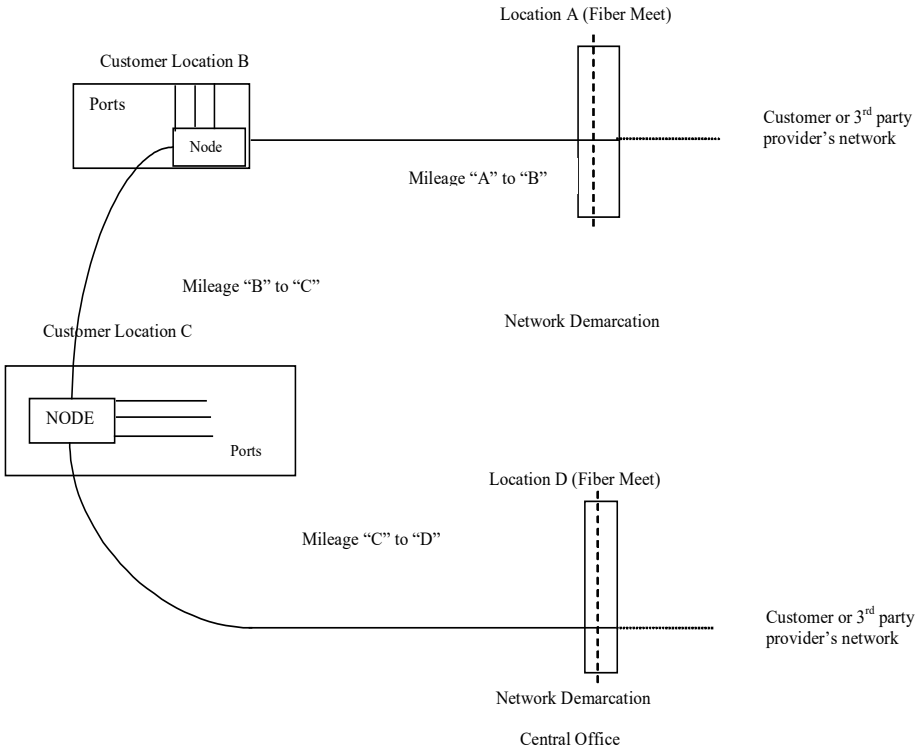

Service availability limited. Refer to # footnote on Page 20-405.

© 2022 Frontier Communications Parent, Inc. All rights reserved

20. Ethernet Private Line (Cont'd)

20.2 Dedicated SONET Ring (DSR) #(Cont'd)

(B) Service Description (Cont'd)

(3) Ring-On-Ring

When DSR is provided in a ring on ring design the following requirements apply:

- The lower speed ring must have a minimum of two enhanced nodes located at the customer premises or Company wire center; and
- The Company must provide the lower speed enhanced nodes; and
- Each lower speed node must be located at the same customer premises or Company wire center as its corresponding higher speed node.

(4) Subtending Rings

The customer may interconnect two (2) or more full rings in a subtending ring configuration subject to the following:

(a) One (1) of the DSR full rings must be designated by the customer as the main ring from which the other DSR full ring(s) will subtend. The main ring must be of equal or greater capacity than each DSR full ring that subtends the main ring. For example, a main ring that is an OC12 DSR can have an OC3 and/or OC12 subtending ring but can not have an OC48 subtending ring. The number of rings that can subtend a main ring may be limited by the type and capacity of the nodes and port configuration specific to the customer's overall DSR service configuration.

(b) Interconnection between the main ring and the subtending ring occurs via a port node. A port node provides high speed interconnection between an enhanced node on the main ring and the high speed facilities on the subtending ring, and applies in lieu of the enhanced node on the subtending ring at that location. Each subtending ring requires one port node at the point of interconnection to the enhanced node on the main ring. Interconnection between the main ring and a subtending ring may occur at a customer designated premises or within a Telephone Company wire center where such nodes are located. Up to two (2) points of interconnection are allowed per subtending ring. A port node is required per point of interconnection.

(c) Only DSR full rings that utilize suitably equipped enhanced nodes can be arranged in subtending ring configurations.

Service availability limited. Refer to # footnote on Page 20-405.

© 2022 Frontier Communications Parent, Inc. All rights reserved

20. Ethernet Private Line (Cont'd)

20.2 Dedicated SONET Ring (DSR) # (Cont'd)

(B) Service Description (Cont'd)

(4) Subtending Rings (Cont'd)

(d) Each ring included in a subtending ring configuration must be arranged as a unidirectional path switched ring (UPSR) and must use enhanced nodes. Bidirectional line switched rings (BLSR) may not be arranged in subtending ring configurations.

(e) DSR partial rings may not be arranged in subtending ring configurations.

(f) Where two (2) points of interconnection between the subtending ring and the main ring are provided, circuits originating on the main ring may be mapped to the subtending ring and circuits originating on the subtending ring may be mapped to the main ring. Channels mapped across the two (2) interconnecting nodes are subject to Dual Node Cross-connect Channel Mapping charges as described in (B)(4) following.

(g) The main ring and any subtending rings associated with the main ring must individually meet the minimum requirement of three (3) nodes except that only one (1) node for the entire service configuration must be located in a Telephone Company wire center. For example, if the main ring has one (1) node located in a Telephone Company wire center and two (2) nodes located at customer designated premises, the subtending ring(s) need not have a node that is located in a Telephone Company wire center.

(1) When determining if the minimum number of nodes on a subtending ring has been met, the port node providing interconnection to the main ring is included in the count.

(2) When determining if the minimum number of nodes on a subtending ring has been met, the enhanced node on the main ring that interconnects with the subtending ring is not included in the count.

Service availability limited. Refer to # footnote on Page 20-405.

© 2022 Frontier Communications Parent, Inc. All rights reserved

20. Ethernet Private Line (Cont'd)

20.2 Dedicated SONET Ring (DSR) # (Cont'd)

(B) Service Description (Cont'd)

(4) Subtending Rings (Cont'd)

(h) Each subtending ring may only interconnect with one (1) main ring.

(i) Subtending ring configurations may be established using new DSR full rings, existing DSR full rings, or a combination of new and existing DSR full rings.

(j) All DSR rings in the same subtending ring configuration must be billed to the same customer.

(k) An example of a subtending ring configuration with two (2) points of interconnection to the main ring is diagrammed below:

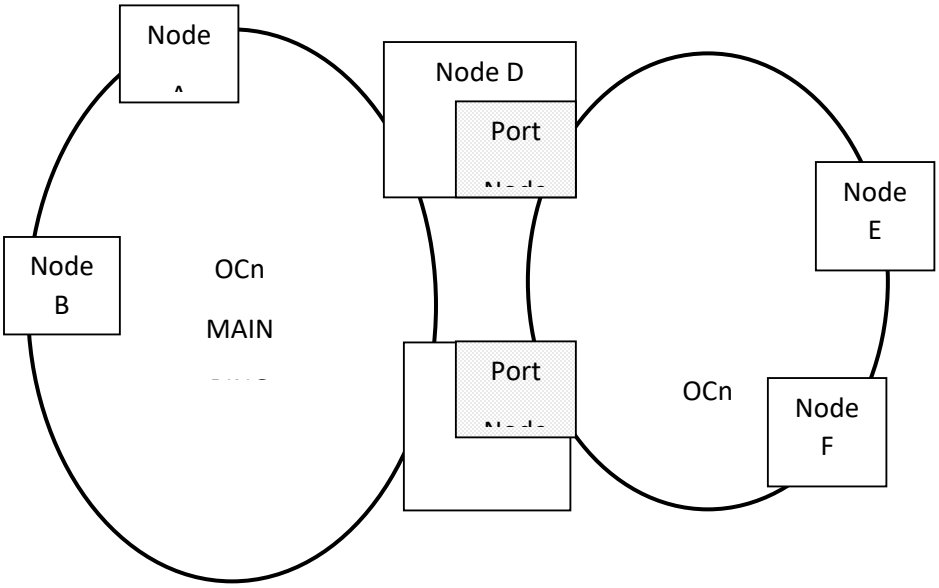

Applicable rate elements:
- Nodes (6)
- Port Node (2)
- Mileage for circumference of Main Ring
- Mileage for circumference of Subtending Ring

Service availability limited. Refer to # footnote on Page 20-405.

© 2022 Frontier Communications Parent, Inc. All rights reserved

20. Ethernet Private Line (Cont'd)

20.2 Dedicated SONET Ring (DSR) # (Cont'd)

(B) Service Description (Cont'd)

(4) Subtending Rings (Cont'd)

(l) Lower speed services provided over DSR must ingress at a node on either ring (the main ring or the subtending ring) and egress at a node on either ring (the subtending ring or the main ring). A single port charge applies at the point of ingress and a single port charge applies at the point of egress, unless the ingress and/or egress occurs via an asymmetrical port facility in which case a separate port charge will not apply for each such ingress or egress.

At the customer's option, a lower level service may interconnect the main and one (1) or more of the subtending ring(s) through two (2) separate points of interconnection with each subtending ring. In this case, a single Dual Node Cross-connect Charge applies per lower level service provided across the interconnecting port nodes, regardless of the number of subtending rings involved. The Dual Node Cross-connect Charge does not apply when a lower level service interconnects the main and subtending ring(s) through a single point of interconnection.

In the event that the customer elects to make a subtending ring an independent full DSR, the independent full DSR ring must meet all of the requirements for a DSR full ring as set forth in (B)(1) preceding. This may require an additional node in order to satisfy the minimum node requirement for a single, independent ring.

Service availability limited. Refer to # footnote on Page 20-405.

© 2022 Frontier Communications Parent, Inc. All rights reserved

20. Ethernet Private Line (Cont'd)

20.2 Dedicated SONET Ring (DSR) # (Cont'd)

(B) Service Description (Cont'd)

(5) The customer must provide, at no cost to the Telephone Company, suitable and secure space, suitable environmental conditions, and uninterrupted power supply, building entrance facilities, and conduit for placement of the facilities and network equipment at its locations as necessary to provide the service.

(6) The customer will be billed additional charges for any charges levied the Telephone Company for space and power required to place ADMs on the Company's side of the network interface.

(7) Connections to Other Services

(a) DSR may connect to Dedicated SONET Optical Transport Service (DSOTS) optical transport channels as set forth in 20.1, preceding. DSOTS combines Dense Wave Division Multiplexing (DWDM) and SONET technologies to create a high-speed backbone network configured in a ring architecture.

(b) Reserved

(c) Reserved

(d) Ethernet Private Line STS1, OC3, OC3c, OC12, OC12c, and OC48 Ethernet-to-SONET mapped services (as set forth in Section 20.3 following) may be connected to Special Access STS1, OC3, OC3c, OC12, OC12c, and OC48 ports, respectively, via symmetrical or asymmetrical port arrangements.

(1) In a symmetrical port arrangement, one (1) of such ports applies on the higher-speed node at the Telephone Company wire center where the service enters the ring, and a second port of the same capacity applies on the higher-speed node where the service exits the ring. For example, a Ethernet Private Line OC3c Ethernet-to-SONET mapped service would require two (2) OC3c ports in a symmetrical port arrangement (one port to enter the ring and one port to exit the ring).

Service availability limited. Refer to # footnote on Page 20-405.

© 2022 Frontier Communications Parent, Inc. All rights reserved

20. Ethernet Private Line (Cont'd)

20.2 Dedicated SONET Ring (DSR) # (Cont'd)

(B) Service Description (Cont'd)

(7) Connections to Other Services (Cont'd)

(d) (Cont'd)

(2) In an asymmetrical port arrangement, one of such ports referenced above applies on the higher-speed node at the Telephone Company wire center where the service enters the ring, and the service exits the ring via the OCn port associated with the Asymmetrical Port Facility. More than one such service referenced above may utilize the same Asymmetrical Port Facility and OCn Port of that Asymmetrical Port Facility. For example, three (3) Ethernet Private Line OC12 Ethernet-to-SONET mapped services require 3 OC12 ports (one port for each service) to enter the ring, and all 3 of such services could be provided over an OC48 Asymmetrical Port Facility, and exit the ring via the same OC48 port of that facility. The number of services that can exit the ring via the same port is limited by the STS1 capacity utilized for the connecting service.

(e) Ethernet services are provided on a point-to-point basis (i.e., native Ethernet to native Ethernet) between two suitably equipped DSR enhanced nodes. Additionally, Ethernet Private Line Gigabit Ethernet (transmitted at 50, 150, 300, 450, 600 Mbps or Full Rate) may be connected to a DSR CO Node. Native to native Ethernet services may not be provided over an asymmetrical port facility.

The connection of Ethernet Private Line Gigabit Ethernet to DSR will occur via a DSR GigE-1, 3, 6, 9, 12 or 24 port on the CO Node. When customers who subscribe to Ethernet Private Line under a one-year commitment period connect their Ethernet Private Line Gigabit Ethernet service to DSR, the DSR GigE ports will be billed at month-to-month rates. Ethernet Private Line Gigabit Ethernet is further described in Section 20.3 following.

(f) Reserved

(g) Extended Superframe Format (ESF) is preferred on all DS1 circuits in order to ensure performance objectives.

(h) DSR may also be connected to the following Telephone Company provided services, provided that such connections are technically and operationally feasible, as determined by the Telephone Company:

- DWDM ring service
- point-to-point SONET service
-Ethernet private line service
- dedicated SONET ring service

Service availability limited. Refer to # footnote on Page 20-405.

© 2022 Frontier Communications Parent, Inc. All rights reserved

20. Ethernet Private Line (Cont'd)

20.2 Dedicated SONET Ring (DSR) # (Cont'd)

(C) Service Components

The service components of DSR include:

- Nodes and Subtending Nodes
- Port Nodes
- Ports
- High Speed Interfaces (certain partial ring configurations only)
- Mileage between nodes
- Optional Features

(1) Nodes and Subtending Nodes

(a) The customer specifies the ring capacity in terms of optical carrier rates. DSR is available in capacities of OC3, OC12, OC48 and OC192. Lower speed channel services are provided between nodes via port designations.

(b) When two nodes are located in the same building, there will be no diversity between the two nodes.

Service availability limited. Refer to # footnote on Page 20-405.

© 2022 Frontier Communications Parent, Inc. All rights reserved

20. Ethernet Private Line (Cont'd)

20.2 Dedicated SONET Ring (DSR) # (Cont'd)

(C) Service Components (Cont'd)

(1) Nodes and Subtending Nodes (Cont'd)

(c) Accepted port speeds are as follows:

Enhanced Nodes:	OC3	OC12	OC48	OC192
DS1 Ports	X	X	X	X
DS3 Ports	X	X	X	X
STS1 Ports	X	X	X	X
DS3 Transmux Ports	X	X	X	X
OC3 Ports		X	X	X
OC12 Ports			X	X
OC48 Ports				X
Ethernet Ports				
GigE-1 Ports	X	X	X	X
GigE-3 Ports		X	X	X
GigE-6 Ports		X	X	X
GigE-9 Ports		X	X	X
GigE-12 Ports			X	X
GigE-24 Ports			X	X

(d) Additional nodes could be required to maintain service quality levels. Generally, a transmission of 20 or more miles or a transmission through 6 or more COs will be subject to loss of signal integrity, and would require an additional node. A regeneration node requires a full capacity node, i.e., an OC3 node cannot be used to regenerate transmission on an OC12 ring.

Service availability limited. Refer to # footnote on Page 20-405.

© 2022 Frontier Communications Parent, Inc. All rights reserved

20. Ethernet Private Line (Cont'd)

20.2 Dedicated SONET Ring (DSR) # (Cont'd)

(C) Service Components (Cont'd)

(1) Nodes and Subtending Nodes (Cont'd)

(e) The customer may provide a single node and associated port equipment at one of its premises subject to compatibility with the Company's equipment in the COs. This compatibility requires that the customer, at its own expense, uses matching vendor's equipment and maintains the same vintage in software release as the Company. Upon written notification from the Company, the customer has 60 days in which to complete the change out of software. In addition, the customer must configure the node to limit access to the data communications channel of the node.

(f) The Company can not ensure the performance monitoring of the ring when it is equipped with customer provided nodes.

(g) Subtending Nodes

(1) A subtending node is an enhanced node that subtends another enhanced node of a higher speed (e.g., an OC12 enhanced node may subtend an OC192 enhanced node).

(2) More than one (1) lower speed enhanced node may subtend the same higher speed enhanced node.

(3) The connection between the higher and lower speed enhanced nodes is a SONET facility (Subtending Node Facility) between an OCn port on the higher speed node and the lower speed node which must be of the same optical carrier rate as the OCn port on the higher speed node.

(4) When the higher speed enhanced node is located at a customer designated premises, the subtending node(s) must be located at the same customer designated premises.

(5) When the higher speed enhanced node is located at a Telephone Company wire center, the subtending node(s) may be located within that same wire center or extended to a customer designated premises that is served by that wire center or by a different wire center. When extending the subtending node to a customer designated premises, the subtending node facility is subject to a channel extension charge. When the customer designated premises is not served by the same wire center as the higher speed enhanced node, mileage applies between the wire centers involved. Mileage applies in addition to the channel extension charge.

Service availability limited. Refer to # footnote on Page 20-405.

© 2022 Frontier Communications Parent, Inc. All rights reserved

20. Ethernet Private Line (Cont'd)

20.2 Dedicated SONET Ring (DSR) # (Cont'd)

(C) Service Components (Cont'd)

(1) Nodes and Subtending Nodes (Cont'd)

(h) When a customer premises node is located in the same building as a CO node, there will be no diversity between the two nodes.

(i) When DSR is ordered under a meet point billing arrangement in which the Telephone Company acts as an intermediate carrier as set forth in Section 2.7.3 preceding, at least one node of the DSR ring must be in a Company CO.

(2) Ports

(a) Ports may be ordered in a symmetrical arrangement (e.g., DS3 Port to DS3 Port), an asymmetrical arrangement (e.g., OC12 Port to DS3 Port) as set forth in (C)(2)(c) following, or in certain transmuxing arrangements as set forth in (C)(2)(d) following. Ports are not provided at mutually agreed upon locations where a high speed (pass-through) interface is utilized.

(b) Reserved

Service availability limited. Refer to # footnote on Page 20-405.

© 2022 Frontier Communications Parent, Inc. All rights reserved

20. Ethernet Private Line (Cont'd)

20.2 Dedicated SONET Ring (DSR) # (Cont'd)

(C) Service Components (Cont'd)

(2) Ports (Cont'd)

(c) Asymmetrical Ports

(1) Asymmetrical ports allow lower level services to be added to, and dropped from, DSR using ports with different transmission rates. For example, a DS1 channel can be added to the ring via a DS3 port and dropped from the ring via a DS1 port. These lower level services may originate and/or terminate at locations that are on or off of the DSR.

(2) For OCn ports, the port with the higher transmission rate uses a facility (Asymmetrical Port Facility or (APF), which is also referred to as a Stub Hub), which is channelized to individual services requiring lower capacity facilities and lower capacity ports. Only one (1) such higher transmission rate OCn port applies per asymmetrical port facility. The number of lower capacity services that can utilize the same APF is limited by the total STS1 capacity of the connecting services. Available transmission rates for the APF are dependent on the capacity of the port to which it is connected. For example, an OC12 APF cannot be established on an OC3 Port. Additionally, the capacity of the port is dependent on the capacity of the node involved.

(3) The APF provides a two-point channelized facility between a customer designated premises or an Expanded Interconnection arrangement and the OCn higher transmission rate port of the asymmetrical port combination. Such port may be associated with a node that is located at either the customer designated premises or within a Telephone Company wire center.

(a) When the APF is located at the customer's designated premises, the APF is provided between the customer's designated premises and the port on the associated node located at that same premises. Rates and charges for the port apply as set forth in following.

(b) When the APF is located in a Telephone Company wire center and the APF connects to a customer designated premises that is served by the same wire center, an asymmetrical port channel extension applies to extend the APF to the customer designated premises. Rates and charges for the asymmetrical port channel extension apply in addition to the rates and charges for the port as set forth in following.

Service availability limited. Refer to # footnote on Page 20-405.

© 2022 Frontier Communications Parent, Inc. All rights reserved

20. Ethernet Private Line (Cont'd)

20.2 Dedicated SONET Ring (DSR) #(Cont'd)

(C) Service Components (Cont'd)

(2) Ports (Cont'd)

(c) Asymmetrical Ports (Cont'd)

(3) (Cont'd)

(c) When the APF is located in a Telephone Company wire center and the APF connects to a customer designated premises that is served by a different wire center, an asymmetrical port channel extension and mileage applies to extend the APF to the customer designated premises. Rates and charges for the asymmetrical port channel extension and mileage apply in addition to the rates and charges for the port as set forth in following.

(d) When the APF is located in a Telephone Company wire center and the APF connects to an Expanded Interconnection arrangement that is located within the same wire center as the node, a port charge applies as set forth in following.

(e) When the APF is located in a Telephone Company wire center and the APF connects to an Expanded Interconnection arrangement that is not located within the same wire center as the node, mileage applies to extend the APF to the Collocated Interconnection arrangement. Rates and charges for the mileage apply in addition to the rates and charges for the port as set forth in following.

(f) For (C)(2)(c)(3)(c) through (e) preceding, channel termination or cross-connect charges apply in addition to the port, asymmetrical port channel extension, and mileage charges. Channel termination charges apply in accordance with Sections 4 and 5 preceding. Cross-connection to Expanded Interconnection Service arrangements apply in accordance with Section 17 preceding.

Service availability limited. Refer to # footnote on Page 20-405.

© 2022 Frontier Communications Parent, Inc. All rights reserved

20. Ethernet Private Line (Cont'd)

20.2 Dedicated SONET Ring (DSR) #(Cont'd)

(C) Service Components (Cont'd)

(2) Ports (Cont'd)

(c) Asymmetrical Ports (Cont'd)

(4) Asymmetrical ports are available in the following combinations:

Ring Capacity	APF Rate	Asymmetrical Port Combinations**
OC3 DSR Ring	N/A	DS3 Transmux - DS1*
	STS-1	STS1 - DS3 STS1 - DS1*
OC12 DSR Ring	N/A	STS1 - DS3 DS3 Transmux - DS1*
	OC3	OC3 - STS1 OC3 – DS3 OC3 - DS1* OC3 - GigE3* OC3 - GigE1*
OC48 DSR Ring	N/A	STS1 - DS3 DS3 Transmux - DS1*
	OC12	OC12 - OC3 OC12 – OC3c OC12 - STS1 OC12 - DS3 OC12 - DS1* OC12 – GigE12* OC12 – GigE9* OC12 - GigE6* OC12 - GigE3* OC12 - GigE1*
	OC3	OC3 - STS1 OC3 - DS3 OC3 - DS1* OC3 - GigE3* OC3 - GigE1*

* Requires enhanced node. For Ethernet (GigE) port options, the associated Ethernet Service must be SONET mapped.
** Concatenation is not available on Switched Access Ports
# Service availability limited. Refer to # footnote on Page 20-405.

© 2022 Frontier Communications Parent, Inc. All rights reserved

20. Ethernet Private Line (Cont'd)

20.2 Dedicated SONET Ring (DSR) # (Cont'd)

(C) Service Components (Cont'd)

(2) Ports (Cont'd)

(c) Asymmetrical Ports (Cont'd)

(4) (Cont'd)

Ring Capacity	APF Rate	Asymmetrical Port Combinations**
OC192 DSR Ring	N/A	STS1 - DS3
		DS3 Transmux - DS1*
	OC48	OC48 – OC12
		OC48 – OC12c
		OC48 – OC3
		OC48 – OC3c
		OC48 – STS1
		OC48 - DS3
		OC48 – DS1*
		OC48 – GigE24*
		OC48 – GigE12*
		OC48 – GigE9*
		OC48 - GigE6*
		OC48 - GigE3*
		OC48 - GigE1*
	OC12	OC12 – OC3
		OC12 – OC3c
		OC12 – STS1
		OC12 - DS3
		OC12 – DS1*
		OC12 – GigE12*
		OC12 – GigE9*
		OC12 - GigE6*
		OC12 - GigE3*
		OC12 - GigE1*
	OC3	OC3 – STS1
		OC3 - DS3
		OC3 – DS1*
		OC3 - GigE3*
		OC3 - GigE1*

* Requires enhanced node. For Ethernet (GigE) port options, the associated Ethernet Service must be SONET mapped.
** Concatenation is not available on Switched Access Ports
# Service availability limited. Refer to # footnote on Page 20-405.

© 2022 Frontier Communications Parent, Inc. All rights reserved

20. Ethernet Private Line (Cont'd)

20.2 Dedicated SONET Ring (DSR) #(Cont'd)

(C) Service Components (Cont'd)

(2) Ports (Cont'd)

(d) Transmux Ports

(1) The DS3 Transmux Port performs a DS3 to a DS1 conversion at a DSR node. The DS3 to DS1 conversion allows a single DSR DS3 Transmux port (which includes a DS3 Transmux Facility to which the DS1 circuits are mapped) to be a facility associated with up to twenty-eight (28) VT1.5 mapped DSR DS1 ports. Such DS3 Transmux Facility will be provisioned upon ordering the associated DS3 Transmux port. Transmuxing is only available where suitable facilities and equipment exist to provide the DS3 Transmux Port. The DS3 Transmux port facility may connect to Switched or Special Access FIA as specified in Sections 4 and 5 preceding.

Service availability limited. Refer to # footnote on Page 20-405.

© 2022 Frontier Communications Parent, Inc. All rights reserved

20. Ethernet Private Line (Cont'd)

20.2 Dedicated SONET Ring (DSR) #(Cont'd)

(C) Service Components (Cont'd)

(2) Ports (Cont'd)

(d) Transmux Ports (Cont'd)

(2) DS3 Transmux Ports utilize a DS3 Transmux Facility to which VT1.5 mapped DSR DS1 ports are associated. Such facility will be provisioned upon ordering the associated DS3 Transmux port.

(3) When transmuxing arrangements are ordered in symmetrical or asymmetrical port combinations, the following conditions apply:

- A DS1 port associated with a DS3 Transmux port and facility may not coexist as a separate DS1 port within the same DSR node.

- An end-to-end DS1 service provided over DSR may not be associated with more than one DS3 Transmux port or DS3 Transmux facility.

- DS3 Transmux ports are available at a premises node or at a wire center node.
- When a DS3 Transmux port is utilized on an enhanced node located in a Telephone Company wire center, such port must be connected to DS3 High Capacity Service as set forth in Section 4 and Section 5 preceding.
- The higher speed port of an asymmetrical port combination will be mapped based on the speed of the connecting service and port.

(4) The DS3 Transmux port may connect to Switched or Special Access DS3 service as specified in Section 4 and Section 5.

(e) The maximum number of ports that are supported on a node may be limited by the number and type of ports that are provided on that node. Upon installation of a new ring, the Customer must provide the Telephone Company with an initial port requirement and a forecast of future port requirements on each node which the Telephone Company will utilize when engineering the port configuration for that node.

(f) Engineering requirements must be taken into consideration when planning port configurations on enhanced nodes. Each NG-ADM platform has different port capacities. Upon installation of a new ring, the customer shall provide initial port requirements and forecasts for each node to allow the Telephone Company to design the network most efficiently.

(g) OC3, OC12c and OC48c ports may also be utilized with service connecting to certain advanced data services.

Service availability limited. Refer to # footnote on Page 20-405.

© 2022 Frontier Communications Parent, Inc. All rights reserved

20. Ethernet Private Line (Cont'd)

20.2 Dedicated SONET Ring (DSR) #(Cont'd)

(C) Service Components (Cont'd)

(3) High Speed (Pass-Through) Interfaces

A high-speed (pass-through) interface is a device placed at a mutually agreed upon fiber-meet location where interconnection between the facilities of the Telephone Company and those of the customer or of a third party provider occurs. The high-speed (pass-through) interface will not be utilized when such interconnection occurs within a Telephone Company CO (for which a node and fiber cross-connects apply) or at a customer's designated premises for which interconnection via a node occurs. Connection to other Telephone Company services is prohibited at locations utilizing a high-speed (pass-through) interface.

(4) Mileage

(a) DSR Mileage is the total of airline distances between enhanced nodes rounded up to the nearest mile. The mileage rate is based on total ring capacity and not on individual services between nodes.

(b) DSR Mileage on a Partial ring is the total of airline distances between devices (nodes) and the designated fiber meet locations (customer designated premises, wire center or mutually agreed upon pass-through location, as applicable) on the partial ring. The total mileage is then rounded up to the nearest mile.

(c) The mileage charge for a four-node OC3 ring with 5.1 miles between each node (20.4 total miles) would be calculated by multiplying the OC3 mileage rate in 20.2(K)(3) by 21 miles. This mileage calculation applies regardless of the number of services (e.g., DS3s) on the ring.

(d) Connection of DSR to a DSOTS ring is provided over an equal speed, unprotected optical transport channel (e.g. a 155.52 Mbps unprotected channel would connect to an OC3 DSR node). When DSR is provided entirely or in part over a DSOTS backbone network as set forth in 20.1 preceding, connection between the DSR nodes is provided using DSOTS unprotected optical transport channels in lieu of DSR channel mileage between the nodes. Each node on the DSR ring must be located at the same customer designated premises or in the same Telephone Company wire center as its corresponding DSOTS node.

(e) When DSR is provided entirely or in part over a Telephone Company provided DWDM ring service backbone network, no DSR channel mileage will apply between the nodes.

(5) Optional Features

Optional features are described in (J) following.

(6) Port Nodes

A port node allows interconnection between two (2) full DSR rings. One (1) of the rings will be designated as the main ring and the other ring is designated as a subtending ring. Subtending rings are described in (B)(4) preceding.

Service availability limited. Refer to # footnote on Page 20-405.

© 2022 Frontier Communications Parent, Inc. All rights reserved

20. Ethernet Private Line (Cont'd)

20.2 Dedicated SONET Ring (DSR) # (Cont'd)

Application of Rates and Charges

(1) All monthly recurring rate elements for DSRs are available for 3, 5 and 7-year commitment periods. DSR ports and asymmetrical port facilities are also available on monthly terms. Nodes, port nodes, optional features, subtending node facilities, asymmetrical port facilities, and ports added subsequent to the initial installation may be coterminous to the expiration date of the DSR provided the addition is prior to the 21st month for a 3-year plan, prior to the 36th month for a 5-year plan, or prior to the 50th month for a 7-year plan. Nodes, port nodes, optional features, subtending node facilities, and asymmetrical port facilities added after the aforementioned periods require extending the commitment period for an additional one year for a 3-year plan, an additional 2 years for a 5-year plan, or an additional 3 years for a 7-year plan. However, ports and asymmetrical port facilities in a Month-to-Month plan may be added at any time.

(2) Once a term period expires, the prevailing monthly rates of the current plan will continue until the customer cancels service or requests a new term plan.

(3) Nonrecurring Charges

(a) First and Additional Nonrecurring Charges for Ports

(1) Nonrecurring charges for DSR ports purchased on a month-to-month plan that are ordered with the initial installation of DSR apply on a first and additional basis. The First Nonrecurring Charge applies to the first of each port type and speed installed at a node. The Additional Nonrecurring Charge applies for each additional port of the same type and same speed added at the same node on the same order. For example, if a customer places an order for ten (10) GigE3 Ports at the same OC48 node, one First Nonrecurring Charge and nine Additional Nonrecurring Charges will apply for the GigE3 Ports.

(2) Changes in Month-to-Month billed ports are treated as disconnects and new installations.

(b) Nonrecurring charges for DSR nodes apply to all nodes and port nodes installed subsequent to the initial installation of DSR.

(c) A Channel Mapping nonrecurring charge as set forth in (K)(5)(b) following applies for each channel which the Telephone Company must map over the partial ring. Channel mapping is only required on channels that originate at and terminate to devices that are not within the partial ring.

Service availability limited. Refer to # footnote on Page 20-405.

© 2022 Frontier Communications Parent, Inc. All rights reserved

20. Ethernet Private Line (Cont'd)

20.2 Dedicated SONET Ring (DSR) # (Cont'd)

Application of Rates and Charges (Cont'd)

(3) Nonrecurring Charges (Cont'd)

(d) When a lower capacity service is dropped from a DSR, the associated ports will be billed to the lower capacity service. Lower capacity services may not be dropped at locations utilizing a pass-through interface. However, a Channel Mapping charge will apply for each lower capacity service that originates at and terminates to devices that are not within the partial ring provided by the Telephone Company. The Channel Mapping Charge is billed to the lower capacity service.

(e) When a lower capacity service is provided between two (2) separate asymmetric port facilities (APF) on the same DSR, the Telephone Company must map the facility assignment on the first APF to the facility assignment on the second APF for which an Asymmetrical Port Mapping Nonrecurring Charge applies per lower capacity service mapped.

(f) Nonrecurring charges apply for the installation of an Optional Feature as described in (J)(1) and (J)(2) following.

(g) A single Dual Node Cross-connect Charge applies per lower level service provided across the interconnecting port nodes of a subtending ring(s) configuration, regardless of the number of subtending rings involved. Dual Node Cross-connect Charges as set forth in (K)(11) following apply for each channel which the Telephone Company must cross-connect between the port nodes of the interconnecting ring(s).

(4) When a node is disconnected prior to the end of the commitment period, the node is subject to termination liability under (E)(1) following.

(5) Reserved

(6) Where an Ethernet, Fibre Channel, or FICON signal is mapped to a SONET service, and that SONET service is provided in a symmetrical port arrangement, two (2) OCn ports apply (one where the mapped signal enters the ring and one where the mapped signal exits the ring).

(7) Where one or more Ethernet, Fibre Channel or FICON signals are mapped to a SONET service, and that SONET service utilizes an asymmetrical port combination (e.g., the signals enter the ring mapped to an OC12 SONET service and exit the ring via an OC48 port associated with an asymmetrical port facility), only one OCn port applies per mapped signal to enter the ring and the signal exits the ring over the asymmetrical port facility. The total number of such mapped Ethernet, Fibre Channel, or FICON signals that can be associated with the OCn Port of the asymmetrical port facility is limited by the STS1 capacity required to map each signal into the SONET service. For example, assume that an OC48 APF is ordered for which an OC48 port, OC48 mileage, and, when applicable, an OC48 Extension applies (an OC48 has a capacity of 48 STS1s). Further assume that 2 Ethernet Private Line 600 Mbps Ethernet-to-SONET mapped services are ordered, each of which requires 6 STS1s when mapped into an OC12 SONET signal. In this example, the OC48 asymmetrical port arrangement would still have 36 available STS1s.

(8) Changes in Month-to-Month billed asymmetrical port facilities are treated as disconnects and subsequent installations.

Service availability limited. Refer to # footnote on Page 20-405.

© 2022 Frontier Communications Parent, Inc. All rights reserved

20. Ethernet Private Line (Cont'd)

20.2 Dedicated SONET Ring (DSR) #(Cont'd)

(E) Termination Liability

(1) Unless otherwise set forth in this section, termination liability applies when DSR service or a Customer Network Management Optional Feature is terminated prior to the end of the applicable commitment term. Termination liability is charged per monthly rate element on all nodes, port nodes, high speed (pass-through) interfaces, optional features, subtending node facilities, asymmetrical port facilities, and ports (other than Month-to-Month billed ports for which the one month minimum service charges applies).

(2) A separate termination liability charges is assessed for each rate element associated with the disconnected DSR service or a Customer Network Management Optional Feature.

(3) Reserved for Future Use (C)

(4) Termination liability will not apply on any DSR service or a Customer Network Management Optional Feature if a customer changes to a longer term commitment period for such service.

Service availability limited. Refer to # footnote on Page 20-405.

© 2024 Frontier Communications Parent, Inc. All rights reserved

20. Ethernet Private Line (Cont'd)

20.2 Dedicated SONET Ring (DSR) # (Cont'd)

(E) Termination Liability (Cont'd)

(5) Termination liability will not apply to a customer upgrade (change to a higher capacity DSR service), if all of the following conditions are met: Upgrades are further subject to the regulations set forth in preceding. These conditions do not apply to Optional Features.

(a) A new commitment period commences with the upgrade.
(b) The new expiration date extends beyond the discontinued plan date.
(c) The upgrade consists of either one (1) DSR service being upgraded into a higher capacity DSR service or two (2) existing DSR services being upgraded into a single, higher capacity DSR service.
(d) The new DSR service has at least one customer premises Node and one CO Node in common with the discontinued service(s).
(e) When two (2) existing DSR services are being upgraded into a single, higher capacity DSR service, the aggregate amount of all monthly charges for the nodes and ports included under the new commitment period is at least 25% greater than the aggregate amount of the monthly charges remaining in the commitment period for the nodes and ports being disconnected.

For illustrative purposes, assume the following:

- Customer has 2 separate OC3 DSR services
- One OC3 DSR is in its twenty-fourth (24th) month of a 3-year term plan (i.e., 12 months remain in the term commitment period) and is configured with 3 nodes and 6 ports (Ring A)
- The other OC3 DSR is in its twenty-first (21st) month of a 3-year term plan (i.e., 15 months remain in the term commitment period) and is configured with 3 nodes and 6 ports (Ring B)
- The customer is upgrading Rings A & B to a single OC12 DSR with a term plan of 3 years that is to be configured with 3 nodes and 6 ports (Ring C)

Based on the above assumptions, the following calculations are used to determine if the aggregate amount of monthly charges for the commitment period of Ring C is greater than the combined aggregate amount of monthly charges for the remainder of the commitment periods on Rings A & B and therefore, whether or not termination liability will apply to Rings A & B for the upgrade.

Service availability limited. Refer to # footnote on Page 20-405.

© 2022 Frontier Communications Parent, Inc. All rights reserved

20. Ethernet Private Line (Cont'd)

20.2 Dedicated SONET Ring (DSR) # (Cont'd)

(E) Termination Liability (Cont'd)

(5) (Cont'd)

Step 1 – Determine the amount of monthly charges remaining on Ring A for the balance of the term commitment by multiplying the monthly rates for the 3 nodes and 6 ports (assume $4680 per month) by the 12 months remaining in the term commitment = $56,160.

Step 2 - Determine the amount of monthly charges remaining on Ring B for the balance of the term commitment by multiplying the monthly rates for the 3 nodes and 6 ports (assume $4680 per month) by the 15 months remaining in the term commitment = $70,200.

Step 3 – Determine the combined aggregate amount of monthly charges remaining for Rings A & B by summing the amounts determined in Steps 1 and 2 ($56,160 + $70,200 = $126,360).

Step 4 – Determine the aggregate amount of monthly charges associated with Ring C by multiplying the monthly rates (assume $9390) by 36 months for the term commitment = $338,040.

Step 5 – Determine the difference between the monthly charges for the existing service and the monthly charges for the upgraded service by subtracting the combined aggregate amount determined in Step 3 from the aggregate amount determined in Step 4 ($338,040 - $126,360 = $211,680).

Step 6 – Divide the result obtained in Step 5 by the aggregate amount determined in Step 3 ($211,680/$126,360 = 1.675). Convert the decimal amount to a percentage by multiplying by 100 (1.675 x 100 = 167.5%.).

If the result is equal to or greater than 25%, then the upgrade occurs without the application of termination liability on Rings A & B. If the result is less than 25%, termination liability applies to Rings A & B in accordance with this Section 20.2(E). Standard rounding rules apply. For this example, the result is 167.5%; therefore, termination liability does not apply.

Additional nodes and ports added at the time of the upgrade incur all applicable rates.

Service availability limited. Refer to # footnote on Page 20-405.

© 2022 Frontier Communications Parent, Inc. All rights reserved

20. Ethernet Private Line (Cont'd)

20.2 Dedicated SONET Ring (DSR) # (Cont'd)

(E) Termination Liability (Cont'd)

(5) (Cont'd)

(f) Termination liability will apply when none of the above conditions are met and the customer cancels service prior to expiration of the plan period. If the cancellation occurs within the first two years of a term plan, termination liability is equal to 100 percent of the monthly charges for the unexpired portion of the first two years, and 25 percent of the monthly charges for the remainder of the plan. If the customer cancels after the first two years of service, then termination liability is equal to 25 percent of the monthly charges for the remaining life of the term.

(g) For Dedicated SONET Ring (DSR) with a commitment period which was extended under following, termination liability is calculated as the difference between the monthly rates for the highest Term Pricing Plan commitment period that could have been satisfied prior to disconnection of the service or cancellation of the plan and the monthly rates already paid for the expired commitment period and the extended commitment period for the period of time the service was in effect.

Service availability limited. Refer to # footnote on Page 20-405.

© 2022 Frontier Communications Parent, Inc. All rights reserved

20. Ethernet Private Line (Cont'd)

20.2 Dedicated SONET Ring (DSR) # (Cont'd)

(F) Conversions

Customers who wish to move or convert existing High Capacity Special Access Services to DSR may do so without conversion charges (termination liability and installation charges) as long as the total capacity of Special Access service purchased by the customer does not change.

Customers who wish to move or convert existing Custom Connect to a DSR may do so without Custom Connect initial termination liability charges as set forth in 20(G)(5) preceding or DSR installation charges as long as the total capacity of Special Access services purchased by the customer does not decrease. The customer also has the option to select a Term Pricing Plan (TPP) for their DSR that is longer than the TPP on Custom Connect.

When the following conditions are met, a customer who converts a Custom Connect Ring to DSR is also eligible to receive credit towards the commitment period of the replacing DSR TPP for the actual time that the Custom Connect Ring was in effect under its current TPP (i.e., time-in-service credit). Time-in-service associated with prior TPPs for Custom Connect are not eligible for time-in-service credit. Time-in-service credit is further described in following. Such credit is not allowed unless the conditions set forth in (1) through (5) following are met.

(1) All rate elements associated with the Custom Connect Ring must have been in service under its TPP for at least 10 months.

(2) The commitment period selected for the DSR TPP must be longer than the commitment period of the TPP for the Custom Connect Ring being converted as follows:

(a) Custom Connect Ring under a 1 year TPP may be converted to DSR under a 3, 5 or 7 year Term Plan.
(b) Custom Connect Ring under a 3 year TPP may be converted to DSR under a 5 or 7 year TPP.
(c) Custom Connect Ring under a 5 year TPP may be converted to DSR under a 7 year TPP.

(3) The Custom Connect Ring being converted to DSR must utilize enhanced nodes. Enhanced nodes are OCn nodes that meet the technical requirements to provide DSR. These nodes are technically capable of providing DS1 and DS3 drops directly from an OCn node terminal as delineated in this Section 20.2 and in Section 20(1)(j) preceding.

(4) The enhanced nodes utilized on the Custom Connect Ring must be capable of being upgraded to the OCn enhanced nodes required for DSR. The technical ability to upgrade such nodes will be determined by the Telephone Company during the planning session with the customer.

(5) The customer acknowledges that portions of the ring will experience a service outage during those times when the nodes are being upgraded. Service outages that occur during such periods of upgrade are not subject to credit for a service interruption as set forth in Section 2.8.1.1(A)(12) preceding.

Service availability limited. Refer to # footnote on Page 20-405.

© 2022 Frontier Communications Parent, Inc. All rights reserved

20. Ethernet Private Line (Cont'd)

20.2 Dedicated SONET Ring (DSR) # (Cont'd)

(G) Deployment and Availability

Since DSR service provides a dedicated high capacity customized network, it is deployed upon customer request. Where SONET facilities are not generally available, special construction may apply, as set forth in Section 3.1.3 preceding.

DSR is available based on service date intervals as described in 3.2.1, preceding.

(H) Shared Use

Shared use is permitted whenever Special Access and Switched Access are provided over the same DSR. At least one channel of a service (e.g., DS1 or DS3) on the ring must be Special Access for the service to be billed as Special Access.

The node, mileage and port rate elements are reduced (ratcheted) to offset the Switched Access charges for the entrance facility, and mileage. Two separate reduction ratios are used. The reduction ratio for the enhanced node and mileage charges is calculated by dividing the number of switched DS0 equivalents in use on the DSR by the total DS0 equivalent quantities for the ring; see the table below.

Ring Type	DS3 Quantities	DS1 Quantities	DS0 Quantities
OC3	3	84	2,016
OC12	12	336	8,064
OC48	48	1,344	32,256
OC192	192	5,376	129,024

The reduction ratio for the port charge is calculated by dividing the number of switched DS0 equivalents in use on the channelized services on the DSR (the lower speed services on the ring) by the total number of DS0 equivalents that are in use on the channelized services on the DSR.

If the DSR is used to route Switched Access traffic between Telephone Company Wire Centers, then Switched Access Direct Trunk Transport rates are also applied.

Service availability limited. Refer to # footnote on Page 20-405.

© 2022 Frontier Communications Parent, Inc. All rights reserved

20. Ethernet Private Line (Cont'd)

20.2 Dedicated SONET Ring (DSR) # (Cont'd)

Extension of a Commitment Period

(1) For Dedicated SONET Ring (DSR), the customer also has the option, within sixty (60) days prior to the expiration date for its commitment period, to extend its expiring Term Pricing Plan to a plan with a longer commitment period, for which time-in-service credit will be allowed for the expiring plan. The commitment period selected for the extended plan must be longer than the commitment period of the expiring plan as follows:

- An expiring 3-Year Term may be extended to either a 5-Year or 7-Year Term Plan.
- An expiring 5-Year Term may be extended to a 7-Year Term Plan.

(2) Time-in-service credit on the expiring plan will be granted and applied towards the new extended plan. For example, an expiring 3-Year term plan will allow for 3 years of time-in-service credit towards the extended plan.

(3) The rate associated with the extended plan will apply effective with the first bill day following expiration of the commitment period for the existing plan and continue through the remainder of the commitment period associated with the extended plan. No adjustment for the increased discount percentage associated with the extended plan will be made to the monthly rates already billed on the expiring plan.

Service availability limited. Refer to # footnote on Page 20-405.

© 2022 Frontier Communications Parent, Inc. All rights reserved

20. Ethernet Private Line (Cont'd)

20.2 Dedicated SONET Ring (DSR) #(Cont'd)

(J) Optional Features

The customer has the option of purchasing an Optional Feature for use with a DSR service provided by the Telephone Company in accordance with this Section 20.2. In order to purchase an Optional Feature, the customer must be subscribed to a DSR service and must use such DSR service in conjunction with the selected Optional Feature.

(1) Customer Service Management Optional Feature (CSM)

(a) Description

Customer Service Management Optional Feature (CSM) provides a customer with real-time information about the operational status of its DSR network and the ability to reconfigure lower level services riding the DSR ring. Three (3) Service Levels of support are offered for CSM. Each Service Level provides different functionalities to which the customer may gain access. These functionalities are described following and include access to real-time information about the customer's DSR network, the ability to generate reports, and the ability to reconfigure lower level services riding the DSR ring. When ordering CSM, the customer must specify the level of CSM support as one of the following three (3) Service Levels.

(1) Level 1 support provides a network view of real-time detection and reporting of network alarm conditions within the customer's DSR network.

(2) Level 2 support provides the same support described in Level 1 along with the ability for the customer to generate basic network performance reports for its DSR network. In accordance with (J)(1)(c)(5) following, the customer may also request network performance reports that are customized to meet their specific needs.

(3) Level 3 support provides the same support described in Levels 1 and 2 along with the ability to reconfigure (re-map) the end points of lower level services riding the ring.

(a) Reconfiguration using CSM consists of re-mapping the end point of a primary circuit to its preplanned (backup) port location. The customer must specify a preplanned port location for each primary circuit installed. The preplanned port location is a backup location that is activated and de-activated when a primary circuit is reconfigured at the request of the customer via the CSM platform. A reconfiguration is limited to the mapping of one primary circuit to its assigned preplanned location. For each preplanned port location, a monthly recurring rate and a nonrecurring installation charge apply per port in accordance with (J)(1)(b) following. When the primary circuit and preplanned port are billed to a customer other than the DSR customer (Service User), the Service User must provide a Letter of Authorization (LOA) signed by both the Service User and the DSR customer (Host Customer). The LOA must include an acknowledgment that the Host Customer has the ability to perform CSM functions (e.g., reconfiguration) on the portion of the Service User's service that rides the DSR.

Service availability limited. Refer to # footnote on Page 20-405.

© 2022 Frontier Communications Parent, Inc. All rights reserved

20. Ethernet Private Line (Cont'd)

20.2 Dedicated SONET Ring (DSR) #(Cont'd)

(J) Optional Features (Cont'd)

(1) Customer Service Management Optional Feature (CSM) (Cont'd)

(a) Description (Cont'd)

(3) (Cont'd)

(b) A Telephone Company Performed Reconfiguration charge, as described in (J)(1)(b)(2)(g) following, will apply when the customer requests that the Telephone Company perform a reconfiguration of service on its behalf. This charge does not apply when a customer performs its own service reconfiguration.

(c) Reconfiguration is not permitted on services arranged in the following service configurations:

(i) Switched Access Service;
(ii) service provided under a shared use arrangement;
(iii) service associated with Centrex-CO or Primary Rate ISDN service; or
(iv) primary circuits for which the customer has not specified a preplanned backup location.

(d) The type of nodes deployed within the DSR network may limit reconfiguration of OC12/OC12c circuits within an OC48 DSR. CSM is not available on partial ring configurations.

(e) When CSM is added to an existing ring, existing circuits that are being made reconfigurable will require that an Access Order be issued to designate the circuit as reconfigurable. Nonrecurring charges as set forth in Section 5 preceding may apply. The Telephone Company's ability to provide CSM on a particular ring may be limited by the overall configuration of that ring. Reconfiguration is limited to those circuits that originate and/or terminate on the ring (i.e., at locations served by a node on the ring) and utilize ports that are symmetrical. For circuits that originate or terminate off the ring (i.e., at locations not served by a node on the ring), the reconfiguration is limited to customer premises node locations on the ring.

Service availability limited. Refer to # footnote on Page 20-405.

© 2022 Frontier Communications Parent, Inc. All rights reserved

20. Ethernet Private Line (Cont'd)

20.2 Dedicated SONET Ring (DSR) # (Cont'd)

(J) Optional Features (Cont'd)

(1) Customer Service Management Optional Feature (CSM) (Cont'd)

(b) Rate Regulations

CSM rates and charges are set forth in (K)(7)(a) following, unless noted otherwise. CSM rates and charges apply in addition to any applicable DSR rates and charges as described in Section (K) following. Unless otherwise indicated below, CSM rates and charges apply regardless of the Service Level selected by the customer.

(1) Monthly Recurring Rate

(a) A CSM Service Level rate applies for each DSR ring provided with CSM.

(b) For customers subscribing to Service Level 3 support, a Preplanned Port rate, as set forth in Section (K)(7)(a)(2) following, applies for each preplanned port location established.

(2) Nonrecurring Charge

(a) A Node Setup charge applies for each node that is equipped with CSM at the time that CSM is initially established on the ring.

(b) An Add/Remove Node charge applies for each node that is subsequently added to, or removed from, a ring that has already been equipped to provide CSM.

(c) An Initial CSM Setup charge applies for establishment of the customer's initial CSM database partition. The initial CSM database partition includes setup for up to six (6) users.

(d) A Setup of Additional Users charge applies for the setup of up to six (6) additional users beyond those provided with the initial database setup when CSM is initially established on the ring.

(e) A Setup of Additional Partition or Change in CSM Service Level charge applies for the setup of an additional CSM database partition created for the same customer or to change from one CSM service level to another (e.g., change Service Level 2 to Service Level 3). Each additional CSM database provides for the setup of up to six (6) additional users.

Service availability limited. Refer to # footnote on Page 20-405.

© 2022 Frontier Communications Parent, Inc. All rights reserved

20. Ethernet Private Line (Cont'd)

20.2 Dedicated SONET Ring (DSR) # (Cont'd)

(J) Optional Features (Cont'd)

(1) Customer Service Management Optional Feature (CSM) (Cont'd)

(b) Rate Regulations (Cont'd)

(3) Nonrecurring Charge (Cont'd)

(f) A Consultation and Support charge applies for each thirty (30) minutes or fraction thereof that the customer requests Telephone Company consultation and support of its CSM network. This charge does not apply during initial setup of CSM on the ring.

(g) A Telephone Company Performed Reconfiguration charge applies for Service Level 3 customers only when the customer requests that the Telephone Company perform a reconfiguration based on its pre-mapping instructions.

(h) A Preplanned Port charge in (K)(7)(a)(2) following, applies for Service Level 3 customers only for each port associated with a preplanned location that is established during the initial establishment of CSM on the ring.

Service availability limited. Refer to # footnote on Page 20-405.

© 2022 Frontier Communications Parent, Inc. All rights reserved

20. Ethernet Private Line (Cont'd)

20.2 Dedicated SONET Ring (DSR) # (Cont'd)

(J) Optional Features (Cont'd)

(1) Customer Service Management Optional Feature (CSM) (Cont'd)

(c) Terms and Conditions

(1) The customer must utilize Internet web access to connect its customer-provided terminal equipment to the Telephone Company's CSM management system. Access to the Internet and any associated rates and charges are the responsibility of the customer. The customer is also responsible for obtaining communications software that is compatible with the software the Telephone Company utilizes to provide CSM. The Telephone Company will work cooperatively with the customer to determine compatibility of its communications software.

(2) CSM is provided only when the Telephone Company provides all nodes on the ring.

(3) Subject to the restrictions set forth in (J)(1)(c)(4) following, CSM is provided coincident with the installation of the associated DSR ring or may be added to an existing ring. The customer will be responsible for the rates and charges set forth in (J)(1)(b) preceding.

Service availability limited. Refer to # footnote on Page 20-405.

© 2022 Frontier Communications Parent, Inc. All rights reserved

20. Ethernet Private Line (Cont'd)

20.2 Dedicated SONET Ring (DSR) #(Cont'd)

(J) Optional Features (Cont'd)

(1) Customer Service Management Optional Feature (CSM) (Cont'd)

(c) Terms and Conditions (Cont'd)

(4) CSM Service Level is provided under a term plan of 3 years, 5 years, or 7 years, as described following.

(a) The duration of the term plan for CSM Service Level must be the same duration as the term plan for the DSR nodes provided with CSM. The customer has the option of subscribing to Preplanned Ports on a month-to-month basis or under a term plan of 3, 5, or 7 years. At the expiration of its 3, 5, or 7 year term plans for CSM Service Levels or Preplanned Ports, the customer has the option of extending CSM Service Level or Preplanned Ports with a coterminous end date as described in (J)(1)(c)(4)(b) following.

(b) The expiration date of each CSM Service Level added subsequent to the initial installation must be coterminous to the expiration date of the associated DSR service, provided that the addition is prior to the 21st month for a 3-year plan, prior to the 36th month for a 5-year plan, or prior to the 50th month for a 7-year plan. A CSM added after the aforementioned periods requires extension of the commitment period for the associated DSR service in accordance with this Section 20.2. Such extension results in the establishment of a new plan that includes both the DSR and the CSM under the same plan with the same expiration date.

(5) With Service Level 2 or 3 support, the customer may retrieve certain basic reports containing performance-monitoring information on its DSR network, as designated and provided by the Telephone Company. Basic reports are available at no additional charge to the customer. The customer may also request that a report be customized to meet its particular needs. Rates and charges for customized reports are provided on an individual case basis (**ICB**) only. Reports are not provided with Level 1 support.

(6) CSM is subject to termination liability if CSM is removed prior to completion of the existing commitment period. The terms and conditions in (E) preceding, as applicable, apply to removal of CSM prior to completion of the existing commitment period.

(7) When the primary circuit and preplanned port are billed to a customer other than the DSR customer (Service User), the Service User must provide a Letter of Authorization (LOA) signed by both the Service User and the DSR customer (Host Customer). The LOA must include an acknowledgment that the Host Customer has the ability to perform CSM functions (e.g., reconfiguration) on the portion of the Service User's service that rides the DSR.

Service availability limited. Refer to # footnote on Page 20-405.

© 2022 Frontier Communications Parent, Inc. All rights reserved

20. Ethernet Private Line (Cont'd)

20.2 Dedicated SONET Ring (DSR) # (Cont'd)

(K) Rates & Charges

(1) Enhanced node

(a) Monthly Rates, per Enhanced node

(Jurisdiction: Illinois, (C)
Indiana, Michigan, North Carolina, Ohio, (C)
South Carolina, and Wisconsin) (C)

Enhanced Node Type	Monthly Rate 3-Year Term
OC3	
Price Band A	$ 1,330.00
Price Band B	1,330.00
Price Band C	1,330.00
N-MSA	1,330.00
OC12	
Price Band A	2,900.00
Price Band B	2,900.00
Price Band C	2,900.00
N-MSA	2,900.00
OC48	
Price Band A	4,800.00
Price Band B	4,800.00
Price Band C	4,800.00
N-MSA	4,800.00
OC192	
Price Band A	10,000.00
Price Band B	10,000.00
Price Band C	10,000.00
N-MSA	10,000.00

Service availability limited. Refer to # footnote on Page 20-405.

© 2022 Frontier Communications Parent, Inc. All rights reserved

20. Ethernet Private Line (Cont'd)

20.2 Dedicated SONET Ring (DSR) # (Cont'd)

(K) Rates & Charges (Cont'd)

(1) Enhanced node(Cont'd)

(a) Monthly Rates, per Enhanced node (Cont'd)

(Jurisdiction: Illinois, (C)
Indiana, Michigan, North Carolina, Ohio, (C)
South Carolina, and Wisconsin) (C)

Enhanced Node Type	Monthly Rate 5-Year Term
OC3	
Price Band A	$1,290.00
Price Band B	1,290.00
Price Band C	1,290.00
N-MSA	1,290.00
OC12	
Price Band A	2,700.00
Price Band B	2,700.00
Price Band C	2,700.00
N-MSA	2,700.00
OC48	
Price Band A	4,604.00
Price Band B	4,604.00
Price Band C	4,604.00
N-MSA	4,604.00
OC192	
Price Band A	9,200.00
Price Band B	9,200.00
Price Band C	9,200.00
N-MSA	9,200.00

Service availability limited. Refer to # footnote on Page 20-405.

© 2022 Frontier Communications Parent, Inc. All rights reserved

20. Ethernet Private Line (Cont'd)

20.2 Dedicated SONET Ring (DSR) # (Cont'd)

(K) Rates & Charges (Cont'd)

(1) Enhanced node(Cont'd)

(a) Monthly Rates, per Enhanced node (Cont'd)

(Jurisdiction: Illinois, (C)
Indiana, Michigan, North Carolina, Ohio, (C)
South Carolina, nd Wisconsin) (C)

Enhanced Node Type	Monthly Rate 7-Year Term
OC3	
Price Band A	$1,186.00
Price Band B	1,186.00
Price Band C	1,186.00
N-MSA	1,186.00
OC12	
Price Band A	2,430.00
Price Band B	2,430.00
Price Band C	2,430.00
N-MSA	2,430.00
OC48	
Price Band A	4,143.00
Price Band B	4,143.00
Price Band C	4,143.00
N-MSA	4,143.00
OC192	
Price Band A	8,280.00
Price Band B	8,280.00
Price Band C	8,280.00
N-MSA	8,280.00

Service availability limited. Refer to # footnote on Page 20-405.

© 2022 Frontier Communications Parent, Inc. All rights reserved

20. Ethernet Private Line (Cont'd)

20.2 Dedicated SONET Ring (DSR) # (Cont'd)

(K) Rates & Charges (Cont'd)

(1) Enhanced node(Cont'd)

(b) Nonrecurring Rates, per Enhanced node

(Jurisdiction: Illinois, (C)
Indiana, Michigan, North Carolina, Ohio, (C)
South Carolina, and Wisconsin) (C)

	Nonrecurring Rate
Subsequent Installation, per Node (any capacity)	
38. Price Band A	$1,599.00
Price Band B	1,599.00
Price Band C	1,599.00
N-MSA	1,599.00

Service availability limited. Refer to # footnote on Page 20-405.

© 2022 Frontier Communications Parent, Inc. All rights reserved

20. Ethernet Private Line (Cont'd)

20.2 Dedicated SONET Ring (DSR) # (Cont'd)

(K) Rates & Charges (Cont'd)

(2) Mileage - Monthly Rates
- per mile between enhanced nodes

(Jurisdiction: Illinois, (C)
Indiana, Michigan, North Carolina, Ohio, (C)
South Carolina, and Wisconsin) (C)

Ring Type	Monthly Rate 3-Year Term
OC3	
Price Band A	$ 325.00
Price Band B	325.00
Price Band C	325.00
N-MSA	325.00
OC12	
Price Band A	335.00
Price Band B	335.00
Price Band C	335.00
N-MSA	335.00
OC48	
Price Band A	450.00
Price Band B	450.00
Price Band C	450.00
N-MSA	450.00
OC192	
Price Band A	1,390.00
Price Band B	1,390.00
Price Band C	1,390.00
N-MSA	1,390.00

Service availability limited. Refer to # footnote on Page 20-405.

© 2022 Frontier Communications Parent, Inc. All rights reserved

20. Ethernet Private Line (Cont'd)

20.2 Dedicated SONET Ring (DSR) # (Cont'd)

(K) Rates & Charges (Cont'd)

(2) Mileage - Monthly Rates (Cont'd)
- per mile between enhanced nodes

(Jurisdiction: Illinois, (C)
Indiana, Michigan, North Carolina, Ohio, (C)
South Carolina, and Wisconsin) (C)

Ring Type	Monthly Rate 5-Year Term
OC3	
Price Band A	$ 300.00
Price Band B	300.00
Price Band C	300.00
N-MSA	300.00
OC12	
Price Band A	320.00
Price Band B	320.00
Price Band C	320.00
N-MSA	320.00
OC48	
Price Band A	420.00
Price Band B	420.00
Price Band C	420.00
N-MSA	420.00
OC192	
Price Band A	1,279.00
Price Band B	1,279.00
Price Band C	1,279.00
N-MSA	1,279.00

Service availability limited. Refer to # footnote on Page 20-405.

© 2022 Frontier Communications Parent, Inc. All rights reserved

20. Ethernet Private Line (Cont'd)

20.2 Dedicated SONET Ring (DSR) # (Cont'd)

(K) Rates & Charges (Cont'd)

(2) Mileage - Monthly Rates (Cont'd)
- per mile between enhanced nodes

(Jurisdiction: Illinois, (C)
Indiana, Michigan, North Carolina, Ohio, (C)
South Carolina, and Wisconsin) (C)

Ring Type	Monthly Rate 7-Year Term
OC3	
Price Band A	$ 275.00
Price Band B	275.00
Price Band C	275.00
N-MSA	275.00
OC12	
Price Band A	300.00
Price Band B	300.00
Price Band C	300.00
N-MSA	300.00
OC48	
Price Band A	400.00
Price Band B	400.00
Price Band C	400.00
N-MSA	400.00
OC192	
Price Band A	1,215.00
Price Band B	1,215.00
Price Band C	1,215.00
N-MSA	1,215.00

Service availability limited. Refer to # footnote on Page 20-405.

© 2022 Frontier Communications Parent, Inc. All rights reserved

20. Ethernet Private Line (Cont'd)

20.1 Dedicated SONET Optical Transport Service (Cont'd)

(K) Rates and Charges (Cont'd)
(4) Point-to-Point Optical Transport Channels
Single Port Interface (Cont'd)
(a) Monthly Rates (Cont'd)

(Jurisdiction: Illinois, Indiana, Michigan, North Carolina, Ohio, South Carolina, and Wisconsin) (C) (C) (C)

Interface Type	Category I Monthly Rate 3-Year Term
Unprotected ETR/CLO	
N-MSA	$3,450.00
Price Band A	3,450.00
Price Band B	3,450.00
Price Band C	3,450.00
Unprotected FDDI	
N-MSA	3,450.00
Price Band A	3,450.00
Price Band B	3,450.00
Price Band C	3,450.00
Unprotected 1.06 Gbps ISC	
N-MSA	3,450.00
Price Band A	3,450.00
Price Band B	3,450.00
Price Band C	3,450.00
Unprotected 2Gbps ISC3	
N-MSA	3,450.00
Price Band A	3,450.00
Price Band B	3,450.00
Price Band C	3,450.00
Unprotected Fast Ethernet	
N-MSA	3,450.00
Price Band A	3,450.00
Price Band B	3,450.00
Price Band C	3,450.00
Unprotected Gigabit Ethernet	
N-MSA	3,450.00
Price Band A	3,450.00
Price Band B	3,450.00
Price Band C	3,450.00
Unprotected 10 Gigabit Ethernet LAN-PHY/WAN-PHY	
N-MSA	5,800.00
Price Band A	5,800.00
Price Band B	5,800.00
Price Banc C	5,800.00

.

© 2022 Frontier Communications Parent, Inc. All rights reserved

20. Ethernet Private Line (Cont'd)

20.2 Dedicated SONET Ring (DSR) # (Cont'd)

(K) Rates & Charges (Cont'd)

(3) Ports – Monthly Rates per Enhanced node

(Jurisdiction: Illinois, (C)
Indiana, Michigan, North Carolina, Ohio, (C)
South Carolina, and Wisconsin) (C)

Port Type	Monthly Rate M-to-M
DS1 at OC3 Node	
Price Band A	$28.00
Price Band B	28.00
Price Band C	28.00
N-MSA	28.00
DS1 At OC12 Node	
Price Band A	28.00
Price Band B	28.00
Price Band C	28.00
N-MSA	28.00
DS1 at OC48 Node	
Price Band A	28.00
Price Band B	28.00
Price Band C	28.00
N-MSA	28.00
DS1 at OC192 Node	
Price Band A	28.00
Price Band B	28.00
Price Band C	28.00
N-MSA	28.00

Service availability limited. Refer to # footnote on Page 20-405.

© 2022 Frontier Communications Parent, Inc. All rights reserved

20. Ethernet Private Line (Cont'd)

20.2 Dedicated SONET Ring (DSR) # (Cont'd)

(K) Rates & Charges (Cont'd)

(3) Ports – Monthly Rates (Cont'd)
per Enhanced node

(Jurisdiction: Illinois, (C)
Indiana, Michigan, North Carolina, Ohio, (C)
South Carolina, and Wisconsin) (C)

Port Type	Monthly Rate M-to-M
DS3 or STS1at OC3 Node	
Price Band A	$115.00
Price Band B	115.00
Price Band C	115.00
N-MSA	115.00
DS3 or STS1 at OC12 Node	
Price Band A	115.00
Price Band B	115.00
Price Band C	115.00
N-MSA	115.00
DS3 or STS1 at OC48 Node	
Price Band A	115.00
Price Band B	115.00
Price Band C	115.00
N-MSA	115.00
DS3 or STS1 at OC192 Node	
Price Band A	115.00
Price Band B	115.00
Price Band C	115.00
N-MSA	115.00

Service availability limited. Refer to # footnote on Page 20-405.

© 2022 Frontier Communications Parent, Inc. All rights reserved

20. Ethernet Private Line (Cont'd)

20.2 Dedicated SONET Ring (DSR) # (Cont'd)

(K) Rates & Charges (Cont'd)

(3) Ports – Monthly Rates (Cont'd)
per Enhanced node

(Jurisdiction: Illinois, (C)
Indiana, Michigan, North Carolina, Ohio, (C)
South Carolina, and Wisconsin) (C)

Port Type	Monthly Rate M-to-M
DS3 Transmux at OC3 Node	
39.	Price Band A
	$400.00
Price Band B	400.00
Price Band C	400.00
N-MSA	400.00
DS3 Transmux at OC12 Node	
Price Band A	400.00
Price Band B	400.00
Price Band C	400.00
N-MSA	400.00
DS3 Transmux at OC48 Node	
Price Band A	400.00
Price Band B	400.00
Price Band C	400.00
N-MSA	400.00
DS3 Transmux at OC192 Node	
Price Band A	400.00
Price Band B	400.00
Price Band C	400.00
N-MSA	400.00

Service availability limited. Refer to # footnote on Page 20-405.

© 2022 Frontier Communications Parent, Inc. All rights reserved

20. Ethernet Private Line (Cont'd)

20.2 Dedicated SONET Ring (DSR) # (Cont'd)

(K) Rates & Charges (Cont'd)

(3) Ports – Monthly Rates (Cont'd)
per Enhanced node

(Jurisdiction: Illinois, (C)
Indiana, Michigan, North Carolina, Ohio, (C)
South Carolina, and Wisconsin) (C)

Port Type	Monthly Rate M-to-M
OC3 at OC12 Node	
40.	Price Band A
	$343.00
Price Band B	343.00
Price Band C	343.00
N-MSA	343.00
OC3 at OC48 Node	
Price Band A	343.00
Price Band B	343.00
Price Band C	343.00
N-MSA	343.00
OC3 at OC192 Node	
Price Band A	343.00
Price Band B	343.00
Price Band C	343.00
N-MSA	343.00

Service availability limited. Refer to # footnote on Page 20-405.

© 2022 Frontier Communications Parent, Inc. All rights reserved

20. Ethernet Private Line (Cont'd)

20.2 Dedicated SONET Ring (DSR) # (Cont'd)

(K) Rates & Charges (Cont'd)

(3) Ports – Monthly Rates (Cont'd)
per Enhanced node

(Jurisdiction: Illinois, (C)
Indiana, Michigan, North Carolina, Ohio, (C)
South Carolina, and Wisconsin) (C)

Port Type	Monthly Rate M-to-M
OC3c at OC12 Node	
Price Band A	$274.00
Price Band B	274.00
Price Band C	274.00
N-MSA	274.00
OC3c at OC48 Node	
Price Band A	274.00
Price Band B	274.00
Price Band C	274.00
N-MSA	274.00
OC3c at OC192 Node	
Price Band A	274.00
Price Band B	274.00
Price Band C	274.00
N-MSA	274.00

Service availability limited. Refer to # footnote on Page 20-405.

© 2022 Frontier Communications Parent, Inc. All rights reserved

20. Ethernet Private Line (Cont'd)

20.2 Dedicated SONET Ring (DSR) # (Cont'd)

(K) Rates & Charges (Cont'd)

(3) Ports – Monthly Rates (Cont'd)
per Enhanced node

(Jurisdiction: Illinois, (C)
Indiana, Michigan, North Carolina, Ohio, (C)
South Carolina, and Wisconsin) (C)

Port Type	Monthly Rate M-to-M
OC12 at OC48 Node	
Price Band A	$642.00
Price Band B	642.00
Price Band C	642.00
N-MSA	642.00
OC12 at OC192 Node	
Price Band A	642.00
Price Band B	642.00
Price Band C	642.00
N-MSA	642.00
OC12c at OC48 Node	
Price Band A	514.00
Price Band B	514.00
Price Band C	514.00
N-MSA	514.00
OC12c at OC192 Node	
Price Band A	514.00
Price Band B	514.00
Price Band C	514.00
N-MSA	514.00

Service availability limited. Refer to # footnote on Page 20-405.

© 2022 Frontier Communications Parent, Inc. All rights reserved

20. Ethernet Private Line (Cont'd)

20.2 Dedicated SONET Ring (DSR) # (Cont'd)

(K) Rates & Charges (Cont'd)

(3) Ports – Monthly Rates (Cont'd)
per Enhanced node

(Jurisdiction: Illinois, (C)
Indiana, Michigan, North Carolina, Ohio, (C)
South Carolina, and Wisconsin) (C)

Port Type	Monthly Rate M-to-M
OC48 at OC192 Node	
Price Band A	$1,400.00
Price Band B	1,400.00
Price Band C	1,400.00
N-MSA	1,400.00
OC48c at OC192 Node	
Price Band A	1,200.00
Price Band B	1,200.00
Price Band C	1,200.00
N-MSA	1,200.00

Service availability limited. Refer to # footnote on Page 20-405.

© 2022 Frontier Communications Parent, Inc. All rights reserved

20. Ethernet Private Line (Cont'd)
20.2 Dedicated SONET Ring (DSR) # (Cont'd)

(K) Rates & Charges (Cont'd)
(3) Ports – Monthly Rates (Cont'd)
per Enhanced node

(Jurisdiction: Illinois,
Indiana, Michigan, North Carolina, Ohio,
South Carolina, and Wisconsin) (C)
(C)
(C)

Port Type	Monthly Rate M-to-M
Gigabit Ethernet	
GigE1 at OC3 Node	
Price Band A	$230.00
Price Band B	230.00
Price Band C	230.00
N-MSA	230.00
GigE1 at OC12 Node	
Price Band A	230.00
Price Band B	230.00
Price Band C	230.00
N-MSA	230.00
GigE1 at OC48 Node	
Price Band A	230.00
Price Band B	230.00
Price Band C	230.00
N-MSA	230.00
GigE1 at OC192 Node	
Price Band A	230.00
Price Band B	230.00
Price Band C	230.00
N-MSA	230.00
GigE3 at OC12 Node	
Price Band A	345.00
Price Band B	345.00
Price Band C	345.00
N-MSA	345.00
GigE3 at OC48 Node	
Price Band A	345.00
Price Band B	345.00
Price Band C	345.00
N-MSA	345.00
GigE3 at OC192 Node	
Price Band A	345.00
Price Band B	345.00
Price Band C	345.00
N-MSA	345.00

Service availability limited. Refer to # footnote on Page 20-405.

© 2022 Frontier Communications Parent, Inc. All rights reserved

20. Ethernet Private Line (Cont'd)

20.2 Dedicated SONET Ring (DSR) # (Cont'd)

(K) Rates & Charges (Cont'd)

(3) Ports – Monthly Rates (Cont'd)
per Enhanced node

(Jurisdiction: Illinois, (C)
Indiana, Michigan, North Carolina, Ohio, (C)
South Carolina, and Wisconsin) (C)

Port Type	Monthly Rate M-to-M
GigE6 at OC12 Node	
Price Band A	$455.00
Price Band B	455.00
Price Band C	455.00
N-MSA	455.00
GigE6 at OC48 Node	
Price Band A	455.00
Price Band B	455.00
Price Band C	455.00
N-MSA	455.00
GigE6 at OC192 Node	
Price Band A	455.00
Price Band B	455.00
Price Band C	455.00
N-MSA	455.00
GigE9 at OC12 Node	
Price Band A	535.00
Price Band B	535.00
Price Band C	535.00
N-MSA	535.00
GigE9 at OC48 Node	
Price Band A	535.00
Price Band B	535.00
Price Band C	535.00
N-MSA	535.00

Service availability limited. Refer to # footnote on Page 20-405.

© 2022 Frontier Communications Parent, Inc. All rights reserved

20. Ethernet Private Line (Cont'd)

20.2 Dedicated SONET Ring (DSR) # (Cont'd)

(K) Rates & Charges (Cont'd)

(3) Ports – Monthly Rates (Cont'd)
per Enhanced node

(Jurisdiction: Illinois, (C)
Indiana, Michigan, North Carolina, Ohio, (C)
South Carolina, and Wisconsin) (C)

Port Type	Monthly Rate M-to-M
GigE9 at OC192 Node	
Price Band A	$535.00
Price Band B	535.00
Price Band C	535.00
N-MSA	535.00
GigE12 at OC48 Node	
Price Band A	645.00
Price Band B	645.00
Price Band C	645.00
N-MSA	645.00
GigE12 at OC192 Node	
Price Band A	645.00
Price Band B	645.00
Price Band C	645.00
N-MSA	645.00
GigE24 at OC48 Node	
Price Band A	880.00
Price Band B	880.00
Price Band C	880.00
N-MSA	880.00
GigE24 at OC192 Node	
Price Band A	880.00
Price Band B	880.00
Price Band C	880.00
N-MSA	880.00

Service availability limited. Refer to # footnote on Page 20-405.

© 2022 Frontier Communications Parent, Inc. All rights reserved

20. Ethernet Private Line (Cont'd)

20.2 Dedicated SONET Ring (DSR) # (Cont'd)

(K) Rates & Charges (Cont'd)

(3) Ports – Monthly Rates (Cont'd)
per Enhanced node

(Jurisdiction: Illinois, (C)
Indiana, Michigan, North Carolina, Ohio, (C)
South Carolina, and Wisconsin) (C)

Port Type	Monthly Rate 3-Year Term
DS1 at OC3 Node	
Price Band A	$28.00
Price Band B	28.00
Price Band C	28.00
N-MSA	28.00
DS1 at OC12 Node	
Price Band A	28.00
Price Band B	28.00
Price Band C	28.00
N-MSA	28.00
DS1 at OC48 Node	
Price Band A	28.00
Price Band B	28.00
Price Band C	28.00
N-MSA	28.00
DS1 at OC192 Node	
Price Band A	28.00
Price Band B	28.00
Price Band C	28.00
N-MSA	28.00

Service availability limited. Refer to # footnote on Page 20-405.

© 2022 Frontier Communications Parent, Inc. All rights reserved

20. Ethernet Private Line (Cont'd)

20.2 Dedicated SONET Ring (DSR) # (Cont'd)

(K) Rates & Charges (Cont'd)

(3) Ports – Monthly Rates (Cont'd)
per Enhanced node

(Jurisdiction: Illinois, (C)
Indiana, Michigan, North Carolina, Ohio, (C)
South Carolina, and Wisconsin) (C)

Port Type	Monthly Rate 3-Year Term
DS3 or STS1at OC3 Node	
Price Band A	$115.00
Price Band B	115.00
Price Band C	115.00
N-MSA	115.00
DS3 or STS1 at OC12 Node	
Price Band A	115.00
Price Band B	115.00
Price Band C	115.00
N-MSA	115.00
DS3 or STS1 at OC48 Node	
Price Band A	115.00
Price Band B	115.00
Price Band C	115.00
N-MSA	115.00
DS3 or STS1 at OC192 Node	
Price Band A	115.00
Price Band B	115.00
Price Band C	115.00
N-MSA	115.00

Service availability limited. Refer to # footnote on Page 20-405.

© 2022 Frontier Communications Parent, Inc. All rights reserved

20. Ethernet Private Line (Cont'd)

20.2 Dedicated SONET Ring (DSR) # (Cont'd)

(K) Rates & Charges (Cont'd)

(3) Ports – Monthly Rates (Cont'd)
per Enhanced node

(Jurisdiction: Illinois, (C)
Indiana, Michigan, North Carolina, Ohio, (C)
South Carolina, and Wisconsin) (C)

Port Type	Monthly Rate 3-Year Term
DS3 Transmux at OC3 Node	
Price Band A	$400.00
Price Band B	400.00
Price Band C	400.00
N-MSA	400.00
DS3 Transmux at OC12 Node	
Price Band A	400.00
Price Band B	400.00
Price Band C	400.00
N-MSA	400.00
DS3 Transmux at OC48 Node	
Price Band A	400.00
Price Band B	400.00
Price Band C	400.00
N-MSA	400.00
DS3 Transmux at OC192 Node	
Price Band A	400.00
Price Band B	400.00
Price Band C	400.00
N-MSA	400.00

Service availability limited. Refer to # footnote on Page 20-405.

© 2022 Frontier Communications Parent, Inc. All rights reserved

20. Ethernet Private Line (Cont'd)

20.2 Dedicated SONET Ring (DSR) # (Cont'd)

(K) Rates & Charges (Cont'd)

(3) Ports – Monthly Rates (Cont'd)
per Enhanced node

(Jurisdiction: Illinois, (C)
Indiana, Michigan, North Carolina, Ohio, (C)
South Carolina, and Wisconsin) (C)

Port Type	Monthly Rate 3-Year Term
OC3 at OC12 Node	
Price Band A	$343.00
Price Band B	343.00
Price Band C	343.00
N-MSA	343.00
OC3 at OC48 Node	
Price Band A	343.00
Price Band B	343.00
Price Band C	343.00
N-MSA	343.00
OC3 at OC192 Node	
Price Band A	343.00
Price Band B	343.00
Price Band C	343.00
N-MSA	343.00

Service availability limited. Refer to # footnote on Page 20-405.

© 2022 Frontier Communications Parent, Inc. All rights reserved

20. Ethernet Private Line (Cont'd)

20.2 Dedicated SONET Ring (DSR) # (Cont'd)

(K) Rates & Charges (Cont'd)

(3) Ports – Monthly Rates (Cont'd)
per Enhanced node

(Jurisdiction: Illinois, (C)
Indiana, Michigan, North Carolina, Ohio, (C)
South Carolina, and Wisconsin) (C)

Port Type	Monthly Rate 3-Year Term
OC3c at OC12 Node	
Price Band A	$274.00
Price Band B	274.00
Price Band C	274.00
N-MSA	274.00
OC3c at OC48 Node	
Price Band A	274.00
Price Band B	274.00
Price Band C	274.00
N-MSA	274.00
OC3c at OC192 Node	
Price Band A	274.00
Price Band B	274.00
Price Band C	274.00
N-MSA	274.00

Service availability limited. Refer to # footnote on Page 20-405.

© 2022 Frontier Communications Parent, Inc. All rights reserved

20. Ethernet Private Line (Cont'd)

20.2 Dedicated SONET Ring (DSR) # (Cont'd)

(K) Rates & Charges (Cont'd)

(3) Ports – Monthly Rates (Cont'd)
per Enhanced node

(Jurisdiction: Illinois, (C)
Indiana, Michigan, North Carolina, Ohio, (C)
South Carolina, and Wisconsin) (C)

Port Type	Monthly Rate 3-Year Term
OC12 at OC48 Node	
Price Band A	$642.00
Price Band B	642.00
Price Band C	642.00
N-MSA	642.00
OC12 at OC192 Node	
Price Band A	642.00
Price Band B	642.00
Price Band C	642.00
N-MSA	642.00
OC12c at OC48 Node	
Price Band A	514.00
Price Band B	514.00
Price Band C	514.00
N-MSA	514.00
OC12c at OC192 Node	
Price Band A	514.00
Price Band B	514.00
Price Band C	514.00
N-MSA	514.00

Service availability limited. Refer to # footnote on Page 20-405.

© 2022 Frontier Communications Parent, Inc. All rights reserved

20. Ethernet Private Line (Cont'd)

20.2 Dedicated SONET Ring (DSR) # (Cont'd)

(K) Rates & Charges (Cont'd)

(3) Ports – Monthly Rates (Cont'd)
per Enhanced node

(Jurisdiction: Illinois, (C)
Indiana, Michigan, North Carolina, Ohio, (C)
South Carolina, and Wisconsin) (C)

Port Type	Monthly Rate 3-Year Term
OC48 at OC192 Node	
Price Band A	$1,400.00
Price Band B	1,400.00
Price Band C	1,400.00
N-MSA	1,400.00
OC48c at OC192 Node	
Price Band A	1,200.00
Price Band B	1,200.00
Price Band C	1,200.00
N-MSA	1,200.00

Service availability limited. Refer to # footnote on Page 20-405.

© 2022 Frontier Communications Parent, Inc. All rights reserved

20. Ethernet Private Line (Cont'd)

20.2 Dedicated SONET Ring (DSR) # (Cont'd)

(K) Rates & Charges (Cont'd)
(3) Ports – Monthly Rates (Cont'd)
per Enhanced node

(Jurisdiction: Illinois, (C)
Indiana, Michigan, North Carolina, Ohio, (C)
South Carolina, and Wisconsin) (C)

Port Type	Monthly Rate 3-Year Term
Gigabit Ethernet	
GigE1 at OC3 Node	
Price Band A	$230.00
Price Band B	230.00
Price Band C	230.00
N-MSA	230.00
GigE1 at OC12 Node	
Price Band A	230.00
Price Band B	230.00
Price Band C	230.00
N-MSA	230.00
GigE1 at OC48 Node	
Price Band A	230.00
Price Band B	230.00
Price Band C	230.00
N-MSA	230.00
GigE1 at OC192 Node	
Price Band A	230.00
Price Band B	230.00
Price Band C	230.00
N-MSA	230.00
GigE3 at OC12 Node	
Price Band A	345.00
Price Band B	345.00
Price Band C	345.00
N-MSA	345.00
GigE3 at OC48 Node	
Price Band A	345.00
Price Band B	345.00
Price Band C	345.00
N-MSA	345.00
GigE3 at OC192 Node	
Price Band A	345.00
Price Band B	345.00
Price Band C	345.00
N-MSA	345.00

Service availability limited. Refer to # footnote on Page 20-405.

© 2022 Frontier Communications Parent, Inc. All rights reserved

20. Ethernet Private Line (Cont'd)

20.2 Dedicated SONET Ring (DSR) # (Cont'd)

(K) Rates & Charges (Cont'd)

(3) Ports – Monthly Rates (Cont'd)
per Enhanced node

(Jurisdiction: Illinois, (C)
Indiana, Michigan, North Carolina, Ohio, (C)
South Carolina, and Wisconsin) (C)

Port Type	Monthly Rate 3-Year Term
GigE6 at OC12 Node	
Price Band A	$455.00
Price Band B	455.00
Price Band C	455.00
N-MSA	455.00
GigE6 at OC48 Node	
Price Band A	455.00
Price Band B	455.00
Price Band C	455.00
N-MSA	455.00
GigE6 at OC192 Node	
Price Band A	455.00
Price Band B	455.00
Price Band C	455.00
N-MSA	455.00
GigE9 at OC12 Node	
Price Band A	535.00
Price Band B	535.00
Price Band C	535.00
N-MSA	535.00
GigE9 at OC48 Node	
Price Band A	535.00
Price Band B	535.00
Price Band C	535.00
N-MSA	535.00
GigE9 at OC192 Node	
Price Band A	535.00
Price Band B	535.00
Price Band C	535.00
N-MSA	535.00

Service availability limited. Refer to # footnote on Page 20-405.

© 2022 Frontier Communications Parent, Inc. All rights reserved

20. Ethernet Private Line (Cont'd)

20.2 Dedicated SONET Ring (DSR) # (Cont'd)

(K) Rates & Charges (Cont'd)

(3) Ports – Monthly Rates (Cont'd)
per Enhanced node

(Jurisdiction: Illinois, (C)
Indiana, Michigan, North Carolina, Ohio, (C)
South Carolina, and Wisconsin) (C)

Port Type	Monthly Rate 3-Year Term
GigE12 at OC48 Node	
Price Band A	$645.00
Price Band B	645.00
Price Band C	645.00
N-MSA	645.00
GigE12 at OC192 Node	
Price Band A	645.00
Price Band B	645.00
Price Band C	645.00
N-MSA	645.00
GigE24 at OC48 Node	
Price Band A	880.00
Price Band B	880.00
Price Band C	880.00
N-MSA	880.00
GigE24 at OC192 Node	
Price Band A	880.00
Price Band B	880.00
Price Band C	880.00
N-MSA	880.00

Service availability limited. Refer to # footnote on Page 20-405.

© 2022 Frontier Communications Parent, Inc. All rights reserved

20. Ethernet Private Line (Cont'd)

20.2 Dedicated SONET Ring (DSR) # (Cont'd)

(K) Rates & Charges (Cont'd)

(3) Ports – Monthly Rates (Cont'd)
per Enhanced node

(Jurisdiction: Illinois, (C)
Indiana, Michigan, North Carolina, Ohio, (C)
South Carolina, and Wisconsin) (C)

Port Type	Monthly Rate 5-Year Term
DS1 at OC3 Node	
Price Band A	$28.00
Price Band B	28.00
Price Band C	28.00
N-MSA	28.00
DS1 At OC12 Node	
Price Band A	28.00
Price Band B	28.00
Price Band C	28.00
N-MSA	28.00
DS1 at OC48 Node	
Price Band A	28.00
Price Band B	28.00
Price Band C	28.00
N-MSA	28.00
DS1 at OC192 Node	
Price Band A	28.00
Price Band B	28.00
Price Band C	28.00
N-MSA	28.00

Service availability limited. Refer to # footnote on Page 20-405.

© 2022 Frontier Communications Parent, Inc. All rights reserved

20. Ethernet Private Line (Cont'd)

20.2 Dedicated SONET Ring (DSR) # (Cont'd)

(K) Rates & Charges (Cont'd)

(3) Ports – Monthly Rates (Cont'd)
per Enhanced node

(Jurisdiction: Illinois, (C)
Indiana, Michigan, North Carolina, Ohio, (C)
South Carolina, and Wisconsin) (C)

Port Type	Monthly Rate 5-Year Term
DS3 or STS1at OC3 Node	
Price Band A	$115.00
Price Band B	115.00
Price Band C	115.00
N-MSA	115.00
DS3 or STS1 at OC12 Node	
Price Band A	115.00
Price Band B	115.00
Price Band C	115.00
N-MSA	115.00
DS3 or STS1 at OC48 Node	
Price Band A	115.00
Price Band B	115.00
Price Band C	115.00
N-MSA	115.00
DS3 or STS1 at OC192 Node	
Price Band A	115.00
Price Band B	115.00
Price Band C	115.00
N-MSA	115.00

Service availability limited. Refer to # footnote on Page 20-405.

© 2022 Frontier Communications Parent, Inc. All rights reserved

20. Ethernet Private Line (Cont'd)

20.2 Dedicated SONET Ring (DSR) # (Cont'd)

(K) Rates & Charges (Cont'd)

(3) Ports – Monthly Rates (Cont'd)
per Enhanced node

(Jurisdiction: Illinois, (C)
Indiana, Michigan, North Carolina, Ohio, (C)
South Carolina, and Wisconsin) (C)

Port Type	Monthly Rate 5-Year Term
DS3 Transmux at OC3 Node	
Price Band A	$400.00
Price Band B	400.00
Price Band C	400.00
N-MSA	400.00
DS3 Transmux at OC12 Node	
Price Band A	400.00
Price Band B	400.00
Price Band C	400.00
N-MSA	400.00
DS3 Transmux at OC48 Node	
Price Band A	400.00
Price Band B	400.00
Price Band C	400.00
N-MSA	400.00
DS3 Transmux at OC192 Node	
Price Band A	400.00
Price Band B	400.00
Price Band C	400.00
N-MSA	400.00

Service availability limited. Refer to # footnote on Page 20-405.

© 2022 Frontier Communications Parent, Inc. All rights reserved

20. Ethernet Private Line (Cont'd)

20.2 Dedicated SONET Ring (DSR) # (Cont'd)

(K) Rates & Charges (Cont'd)

(3) Ports – Monthly Rates (Cont'd)
per Enhanced node

(Jurisdiction: Illinois, (C)
Indiana, Michigan, North Carolina, Ohio, (C)
South Carolina, and Wisconsin) (C)

Port Type	Monthly Rate 5-Year Term
OC3 at OC12 Node	
Price Band A	$343.00
Price Band B	343.00
Price Band C	343.00
N-MSA	343.00
OC3 at OC48 Node	
Price Band A	343.00
Price Band B	343.00
Price Band C	343.00
N-MSA	343.00
OC3 at OC192 Node	
Price Band A	343.00
Price Band B	343.00
Price Band C	343.00
N-MSA	343.00

Service availability limited. Refer to # footnote on Page 20-405.

© 2022 Frontier Communications Parent, Inc. All rights reserved

20. Ethernet Private Line (Cont'd)

20.2 Dedicated SONET Ring (DSR) # (Cont'd)

(K) Rates & Charges (Cont'd)

(3) Ports – Monthly Rates (Cont'd)
per Enhanced node

(Jurisdiction: Illinois, (C)
Indiana, Michigan, North Carolina, Ohio, (C)
South Carolina, and Wisconsin) (C)

Port Type	Monthly Rate 5-Year Term
OC3c at OC12 Node	
Price Band A	$274.00
Price Band B	274.00
Price Band C	274.00
N-MSA	274.00
OC3c at OC48 Node	
Price Band A	274.00
Price Band B	274.00
Price Band C	274.00
N-MSA	274.00
OC3c at OC192 Node	
Price Band A	274.00
Price Band B	274.00
Price Band C	274.00
N-MSA	274.00

Service availability limited. Refer to # footnote on Page 20-405.

© 2022 Frontier Communications Parent, Inc. All rights reserved

20. Ethernet Private Line (Cont'd)

20.2 Dedicated SONET Ring (DSR) # (Cont'd)

(K) Rates & Charges (Cont'd)

(3) Ports – Monthly Rates (Cont'd)
per Enhanced node

(Jurisdiction: Illinois, (C)
Indiana, Michigan, North Carolina, Ohio, (C)
South Carolina, and Wisconsin) (C)

Port Type	Monthly Rate 5-Year Term
OC12 at OC48 Node	
Price Band A	$642.00
Price Band B	642.00
Price Band C	642.00
N-MSA	642.00
OC12 at OC192 Node	
Price Band A	642.00
Price Band B	642.00
Price Band C	642.00
N-MSA	642.00
OC12c at OC48 Node	
Price Band A	514.00
Price Band B	514.00
Price Band C	514.00
N-MSA	514.00
OC12c at OC192 Node	
Price Band A	514.00
Price Band B	514.00
Price Band C	514.00
N-MSA	514.00

Service availability limited. Refer to # footnote on Page 20-405.

© 2022 Frontier Communications Parent, Inc. All rights reserved

20. Ethernet Private Line (Cont'd)

20.2 Dedicated SONET Ring (DSR) # (Cont'd)

(K) Rates & Charges (Cont'd)

(3) Ports – Monthly Rates (Cont'd)
per Enhanced node

(Jurisdiction: Illinois, (C)
Indiana, Michigan, North Carolina, Ohio, (C)
South Carolina, and Wisconsin) (C)

Port Type	Monthly Rate 5-Year Term
OC48 at OC192 Node	
Price Band A	$1,400.00
Price Band B	1,400.00
Price Band C	1,400.00
N-MSA	1,400.00
OC48c at OC192 Node	
Price Band A	1,200.00
Price Band B	1,200.00
Price Band C	1,200.00
N-MSA	1,200.00

Service availability limited. Refer to # footnote on Page 20-405.

© 2022 Frontier Communications Parent, Inc. All rights reserved

20. Ethernet Private Line (Cont'd)

20.2 Dedicated SONET Ring (DSR) # (Cont'd)

(K) Rates & Charges (Cont'd)
(3) Ports – Monthly Rates (Cont'd)
per Enhanced node

(Jurisdiction: Illinois, (C)
Indiana, Michigan, North Carolina, Ohio, (C)
South Carolina, and Wisconsin) (C)

Port Type	Monthly Rate 5-Year Term
Gigabit Ethernet	
GigE1 at OC3 Node	
Price Band A	$230.00
Price Band B	230.00
Price Band C	230.00
N-MSA	230.00
GigE1 at OC12 Node	
Price Band A	230.00
Price Band B	230.00
Price Band C	230.00
N-MSA	230.00
GigE1 at OC48 Node	
Price Band A	230.00
Price Band B	230.00
Price Band C	230.00
N-MSA	230.00
GigE1 at OC192 Node	
Price Band A	230.00
Price Band B	230.00
Price Band C	230.00
N-MSA	230.00
GigE3 at OC12 Node	
Price Band A	345.00
Price Band B	345.00
Price Band C	345.00
N-MSA	345.00
GigE3 at OC48 Node	
Price Band A	345.00
Price Band B	345.00
Price Band C	345.00
N-MSA	345.00
GigE3 at OC192 Node	
Price Band A	345.00
Price Band B	345.00
Price Band C	345.00
N-MSA	345.00

Service availability limited. Refer to # footnote on Page 20-405.

© 2022 Frontier Communications Parent, Inc. All rights reserved

20. Ethernet Private Line (Cont'd)

20.2 Dedicated SONET Ring (DSR) # (Cont'd)

(K) Rates & Charges (Cont'd)

(3) Ports – Monthly Rates (Cont'd)
per Enhanced node

(Jurisdiction: Illinois, (C)
Indiana, Michigan, North Carolina, Ohio, (C)
South Carolina, and Wisconsin) (C)

Port Type	Monthly Rate 5-Year Term
GigE6 at OC12 Node	
Price Band A	$455.00
Price Band B	455.00
Price Band C	455.00
N-MSA	455.00
GigE6 at OC48 Node	
Price Band A	455.00
Price Band B	455.00
Price Band C	455.00
N-MSA	455.00
GigE6 at OC192 Node	
Price Band A	455.00
Price Band B	455.00
Price Band C	455.00
N-MSA	455.00
GigE9 at OC12 Node	
Price Band A	535.00
Price Band B	535.00
Price Band C	535.00
N-MSA	535.00
GigE9 at OC48 Node	
Price Band A	535.00
Price Band B	535.00
Price Band C	535.00
N-MSA	535.00
GigE9 at OC192 Node	
Price Band A	535.00
Price Band B	535.00
Price Band C	535.00
N-MSA	535.00

Service availability limited. Refer to # footnote on Page 20-405.

© 2022 Frontier Communications Parent, Inc. All rights reserved

20. Ethernet Private Line (Cont'd)

20.2 Dedicated SONET Ring (DSR) # (Cont'd)

(K) Rates & Charges (Cont'd)

(3) Ports – Monthly Rates (Cont'd)
per Enhanced node

(Jurisdiction: Illinois, (C)
Indiana, Michigan, North Carolina, Ohio, (C)
South Carolina, and Wisconsin) (C)

Port Type	Monthly Rate 5-Year Term
GigE12 at OC48 Node	
Price Band A	$645.00
Price Band B	645.00
Price Band C	645.00
N-MSA	645.00
GigE12 at OC192 Node	
Price Band A	645.00
Price Band B	645.00
Price Band C	645.00
N-MSA	645.00
GigE24 at OC48 Node	
Price Band A	880.00
Price Band B	880.00
Price Band C	880.00
N-MSA	880.00
GigE24 at OC192 Node	
Price Band A	880.00
Price Band B	880.00
Price Band C	880.00
N-MSA	880.00

Service availability limited. Refer to # footnote on Page 20-405.

© 2022 Frontier Communications Parent, Inc. All rights reserved

20. Ethernet Private Line (Cont'd)

20.2 Dedicated SONET Ring (DSR) # (Cont'd)

(K) Rates & Charges (Cont'd)

(3) Ports – Monthly Rates (Cont'd)
per Enhanced node

(Jurisdiction: Illinois, (C)
Indiana, Michigan, North Carolina, Ohio, (C)
South Carolina, and Wisconsin) (C)

Port Type	Monthly Rate 7-Year Term
DS1 at OC3 Node	
Price Band A	$28.00
Price Band B	28.00
Price Band C	28.00
N-MSA	28.00
DS1 At OC12 Node	
Price Band A	28.00
Price Band B	28.00
Price Band C	28.00
N-MSA	28.00
DS1 at OC48 Node	
Price Band A	28.00
Price Band B	28.00
Price Band C	28.00
N-MSA	28.00
DS1 at OC192 Node	
Price Band A	28.00
Price Band B	28.00
Price Band C	28.00
N-MSA	28.00

Service availability limited. Refer to # footnote on Page 20-405.

© 2022 Frontier Communications Parent, Inc. All rights reserved

20. Ethernet Private Line (Cont'd)

20.2 Dedicated SONET Ring (DSR) # (Cont'd)

(K) Rates & Charges (Cont'd)

(3) Ports – Monthly Rates (Cont'd)
per Enhanced node

(Jurisdiction: Illinois, (C)
Indiana, Michigan, North Carolina, Ohio, (C)
South Carolina, and Wisconsin) (C)

Port Type	Monthly Rate 7-Year Term
DS3 or STS1at OC3 Node	
Price Band A	$115.00
Price Band B	115.00
Price Band C	115.00
N-MSA	115.00
DS3 or STS1 at OC12 Node	
Price Band A	115.00
Price Band B	115.00
Price Band C	115.00
N-MSA	115.00
DS3 or STS1 at OC48 Node	
Price Band A	115.00
Price Band B	115.00
Price Band C	115.00
N-MSA	115.00
DS3 or STS1 at OC192 Node	
Price Band A	115.00
Price Band B	115.00
Price Band C	115.00
N-MSA	115.00

Service availability limited. Refer to # footnote on Page 20-405.

© 2022 Frontier Communications Parent, Inc. All rights reserved

20. Ethernet Private Line (Cont'd)

20.2 Dedicated SONET Ring (DSR) # (Cont'd)

(K) Rates & Charges (Cont'd)
(3) Ports – Monthly Rates (Cont'd)
per Enhanced node

(Jurisdiction: Illinois, (C)
Indiana, Michigan, North Carolina, Ohio, (C)
South Carolina, and Wisconsin) (C)

Port Type	Monthly Rate 7-Year Term
DS3 Transmux at OC3 Node	
Price Band A	$400.00
Price Band B	400.00
Price Band C	400.00
N-MSA	400.00
DS3 Transmux at OC12 Node	
Price Band A	400.00
Price Band B	400.00
Price Band C	400.00
N-MSA	400.00
DS3 Transmux at OC48 Node	
Price Band A	400.00
Price Band B	400.00
Price Band C	400.00
N-MSA	400.00
DS3 Transmux at OC192 Node	
Price Band A	400.00
Price Band B	400.00
Price Band C	400.00
N-MSA	400.00

Service availability limited. Refer to # footnote on Page 20-405.

© 2022 Frontier Communications Parent, Inc. All rights reserved

20. Ethernet Private Line (Cont'd)

20.2 Dedicated SONET Ring (DSR) # (Cont'd)

(K) Rates & Charges (Cont'd)

(3) Ports – Monthly Rates (Cont'd)
per Enhanced node

(Jurisdiction: Illinois, (C)
Indiana, Michigan, North Carolina, Ohio, (C)
South Carolina, and Wisconsin) (C)

Port Type	Monthly Rate 7-Year Term
OC3 at OC12 Node	
Price Band A	$343.00
Price Band B	343.00
Price Band C	343.00
N-MSA	343.00
OC3 at OC48 Node	
Price Band A	343.00
Price Band B	343.00
Price Band C	343.00
N-MSA	343.00
OC3 at OC192 Node	
Price Band A	343.00
Price Band B	343.00
Price Band C	343.00
N-MSA	343.00

Service availability limited. Refer to # footnote on Page 20-405.

© 2022 Frontier Communications Parent, Inc. All rights reserved

20. Ethernet Private Line (Cont'd)

20.2 Dedicated SONET Ring (DSR) # (Cont'd)

(K) Rates & Charges (Cont'd)

(3) Ports – Monthly Rates (Cont'd)
per Enhanced node

(Jurisdiction: Illinois, (C)
Indiana, Michigan, North Carolina, Ohio, (C)
South Carolina, and Wisconsin) (C)

Port Type	Monthly Rate 7-Year Term
OC3c at OC12 Node	
Price Band A	$274.00
Price Band B	274.00
Price Band C	274.00
N-MSA	274.00
OC3c at OC48 Node	
Price Band A	274.00
Price Band B	274.00
Price Band C	274.00
N-MSA	274.00
OC3c at OC192 Node	
Price Band A	274.00
Price Band B	274.00
Price Band C	274.00
N-MSA	274.00

Service availability limited. Refer to # footnote on Page 20-405.

© 2022 Frontier Communications Parent, Inc. All rights reserved

20. Ethernet Private Line (Cont'd)

20.2 Dedicated SONET Ring (DSR) # (Cont'd)

(K) Rates & Charges (Cont'd)

(3) Ports – Monthly Rates (Cont'd)
per Enhanced node

(Jurisdiction: Illinois, (C)
Indiana, Michigan, North Carolina, Ohio, (C)
South Carolina, and Wisconsin) (C)

Port Type	Monthly Rate 7-Year Term
OC12 at OC48 Node	
Price Band A	$642.00
Price Band B	642.00
Price Band C	642.00
N-MSA	642.00
OC12 at OC192 Node	
Price Band A	642.00
Price Band B	642.00
Price Band C	642.00
N-MSA	642.00
OC12c at OC48 Node	
Price Band A	514.00
Price Band B	514.00
Price Band C	514.00
N-MSA	514.00
OC12c at OC192 Node	
Price Band A	514.00
Price Band B	514.00
Price Band C	514.00
N-MSA	514.00

Service availability limited. Refer to # footnote on Page 20-405.

© 2022 Frontier Communications Parent, Inc. All rights reserved

20. Ethernet Private Line (Cont'd)

20.2 Dedicated SONET Ring (DSR) # (Cont'd)

(K) Rates & Charges (Cont'd)

(3) Ports – Monthly Rates (Cont'd)
per Enhanced node

(Jurisdiction: Illinois, (C)
Indiana, Michigan, North Carolina, Ohio, (C)
South Carolina, and Wisconsin) (C)

Port Type	Monthly Rate 7-Year Term
OC48 at OC192 Node	
Price Band A	$1,400.00
Price Band B	1,400.00
Price Band C	1,400.00
N-MSA	1,400.00
OC48c at OC192 Node	
Price Band A	1,200.00
Price Band B	1,200.00
Price Band C	1,200.00
N-MSA	1,200.00

Service availability limited. Refer to # footnote on Page 20-405.

© 2022 Frontier Communications Parent, Inc. All rights reserved

20. Ethernet Private Line (Cont'd)

20.2 Dedicated SONET Ring (DSR) # (Cont'd)

(K) Rates & Charges (Cont'd)
(3) Ports – Monthly Rates (Cont'd)
per Enhanced node

(Jurisdiction: Illinois, (C)
Indiana, Michigan, North Carolina, Ohio, (C)
South Carolina, and Wisconsin) (C)

Port Type	Monthly Rate 7-Year Term
Gigabit Ethernet	
GigE1 at OC3 Node	
Price Band A	$230.00
Price Band B	230.00
Price Band C	230.00
N-MSA	230.00
GigE1 at OC12 Node	
Price Band A	230.00
Price Band B	230.00
Price Band C	230.00
N-MSA	230.00
GigE1 at OC48 Node	
Price Band A	230.00
Price Band B	230.00
Price Band C	230.00
N-MSA	230.00
GigE1 at OC192 Node	
Price Band A	230.00
Price Band B	230.00
Price Band C	230.00
N-MSA	230.00
GigE3 at OC12 Node	
Price Band A	345.00
Price Band B	345.00
Price Band C	345.00
N-MSA	345.00
GigE3 at OC48 Node	
Price Band A	345.00
Price Band B	345.00
Price Band C	345.00
N-MSA	345.00
GigE3 at OC192 Node	
Price Band A	345.00
Price Band B	345.00
Price Band C	345.00
N-MSA	345.00

Service availability limited. Refer to # footnote on Page 20-405.

© 2022 Frontier Communications Parent, Inc. All rights reserved

20. Ethernet Private Line (Cont'd)

20.2 Dedicated SONET Ring (DSR) # (Cont'd)

(K) Rates & Charges (Cont'd)
(3) Ports – Monthly Rates (Cont'd)
per Enhanced node

(Jurisdiction: Illinois, (C)
Indiana, Michigan, North Carolina, Ohio, (C)
South Carolina, and Wisconsin) (C)

Port Type	Monthly Rate 7-Year Term
GigE6 at OC12 Node	
Price Band A	$455.00
Price Band B	455.00
Price Band C	455.00
N-MSA	455.00
GigE6 at OC48 Node	
Price Band A	455.00
Price Band B	455.00
Price Band C	455.00
N-MSA	455.00
GigE6 at OC192 Node	
Price Band A	455.00
Price Band B	455.00
Price Band C	455.00
N-MSA	455.00
GigE9 at OC12 Node	
Price Band A	535.00
Price Band B	535.00
Price Band C	535.00
N-MSA	535.00
GigE9 at OC48 Node	
Price Band A	535.00
Price Band B	535.00
Price Band C	535.00
N-MSA	535.00
GigE9 at OC192 Node	
Price Band A	535.00
Price Band B	535.00
Price Band C	535.00
N-MSA	535.00

Service availability limited. Refer to # footnote on Page 20-405.

© 2022 Frontier Communications Parent, Inc. All rights reserved

20. Ethernet Private Line (Cont'd)

20.2 Dedicated SONET Ring (DSR) # (Cont'd)

(K) Rates & Charges (Cont'd)

(3) Ports – Monthly Rates (Cont'd)
per Enhanced node

(Jurisdiction: Illinois, (C)
Indiana, Michigan, North Carolina, Ohio, (C)
South Carolina, and Wisconsin) (C)

Port Type	Monthly Rate 7-Year Term
GigE12 at OC48 Node	
Price Band A	$645.00
Price Band B	645.00
Price Band C	645.00
N-MSA	645.00
GigE12 at OC192 Node	
Price Band A	645.00
Price Band B	645.00
Price Band C	645.00
N-MSA	645.00
GigE24 at OC48 Node	
Price Band A	880.00
Price Band B	880.00
Price Band C	880.00
N-MSA	880.00
GigE24 at OC192 Node	
Price Band A	880.00
Price Band B	880.00
Price Band C	880.00
N-MSA	880.00

Service availability limited. Refer to # footnote on Page 20-405.

© 2022 Frontier Communications Parent, Inc. All rights reserved

20. Ethernet Private Line (Cont'd)

20.2 Dedicated SONET Ring (DSR) # (Cont'd)

(K) Rates & Charges (Cont'd)

(4) Ports – Nonrecurring Charges

(a) Initial Installation Charges: Month-to-Month ports only

(Jurisdiction: Illinois, (C)
Indiana, Michigan, North Carolina, Ohio (C)
South Carolina, and Wisconsin) (C)

Port Type	First	Additional
DS1 at OC3 Node		
Price Band A	$525.00	$210.00
Price Band B	525.00	210.00
Price Band C	525.00	210.00
N-MSA	525.00	210.00
DS1 at OC12 Node		
Price Band A	525.00	210.00
Price Band B	525.00	210.00
Price Band C	525.00	210.00
N-MSA	525.00	210.00
DS1 at OC48 Node		
Price Band A	525.00	210.00
Price Band B	525.00	210.00
Price Band C	525.00	210.00
N-MSA	525.00	210.00
DS1 at OC192 Node		
Price Band A	525.00	210.00
Price Band B	525.00	210.00
Price Band C	525.00	210.00
N-MSA	525.00	210.00

Service availability limited. Refer to # footnote on Page 20-405.

© 2022 Frontier Communications Parent, Inc. All rights reserved

20. Ethernet Private Line (Cont'd)

20.2 Dedicated SONET Ring (DSR) # (Cont'd)

(K) Rates & Charges (Cont'd)

(4) Ports – Nonrecurring Charges (Cont'd)

(a) Initial Installation Charges: Month-to-Month ports only (Cont'd)

(Jurisdiction: Illinois, (C)
Indiana, Michigan, North Carolina, Ohio, (C)
South Carolina, and Wisconsin) (C)

Port Type	First	Additional
DS3 or STS1 at OC3 Node		
Price Band A	$805.00	$343.00
Price Band B	805.00	343.00
Price Band C	805.00	343.00
N-MSA	805.00	343.00
DS3 or STS1 at OC12 Node		
Price Band A	805.00	343.00
Price Band B	805.00	343.00
Price Band C	805.00	343.00
N-MSA	805.00	343.00
DS3 or STS1 at OC48 Node		
Price Band A	805.00	343.00
Price Band B	805.00	343.00
Price Band C	805.00	343.00
N-MSA	805.00	343.00
DS3 or STS1 at OC192 Node		
Price Band A	805.00	343.00
Price Band B	805.00	343.00
Price Band C	805.00	343.00
N-MSA	805.00	343.00

Service availability limited. Refer to # footnote on Page 20-405.

© 2022 Frontier Communications Parent, Inc. All rights reserved

20. Ethernet Private Line (Cont'd)

20.2 Dedicated SONET Ring (DSR) # (Cont'd)

(K) Rates & Charges (Cont'd)
(4) Ports – Nonrecurring Charges (Cont'd)
(a) Initial Installation Charges: Month-to-Month ports only (Cont'd)

(Jurisdiction: Illinois, (C)
Indiana, Michigan, North Carolina, Ohio, (C)
South Carolina, and Wisconsin) (C)

Port Type	First	Additional
DS3 Transmux at OC3 Node		
Price Band A	$805.00	$343.00
Price Band B	805.00	343.00
Price Band C	805.00	343.00
N-MSA	805.00	343.00
Price Band A	805.00	210.00
Price Band B	805.00	210.00
Price Band C	805.00	210.00
N-MSA	805.00	210.00
DS3 Transmux at OC12 Node		
Price Band A	805.00	343.00
Price Band B	805.00	343.00
Price Band C	805.00	343.00
N-MSA	805.00	343.00
Price Band A	805.00	210.00
Price Band B	805.00	210.00
Price Band C	805.00	210.00
N-MSA	805.00	210.00
DS3 Transmux at OC48 Node		
Price Band A	805.00	343.00
Price Band B	805.00	343.00
Price Band C	805.00	343.00
N-MSA	805.00	343.00
Price Band A	805.00	210.00
Price Band B	805.00	210.00
Price Band C	805.00	210.00
N-MSA	805.00	210.00
DS3 Transmux at OC192 Node		
Price Band A	805.00	343.00
Price Band B	805.00	343.00
Price Band C	805.00	343.00
N-MSA	805.00	343.00
Price Band A	805.00	210.00
Price Band B	805.00	210.00
Price Band C	805.00	210.00
N-MSA	805.00	210.00

Service availability limited. Refer to # footnote on Page 20-405.

© 2022 Frontier Communications Parent, Inc. All rights reserved

20. Ethernet Private Line (Cont'd)

20.2 Dedicated SONET Ring (DSR) # (Cont'd)

(K) Rates & Charges (Cont'd)

(4) Ports – Nonrecurring Charges (Cont'd)

(a) Initial Installation Charges: Month-to-Month ports only (Cont'd)

(Jurisdiction: Illinois, (C)
Indiana, Michigan, North Carolina, Ohio, (C)
South Carolina, and Wisconsin) (C)

Port Type	First	Additional
OC3 at OC12 Node		
Price Band A	$805.00	$343.00
Price Band B	805.00	343.00
Price Band C	805.00	343.00
N-MSA	805.00	343.00
OC3 at OC48 Node		
Price Band A	805.00	343.00
Price Band B	805.00	343.00
Price Band C	805.00	343.00
N-MSA	805.00	343.00
OC3 at OC192 Node		
Price Band A	805.00	343.00
Price Band B	805.00	343.00
Price Band C	805.00	343.00
N-MSA	805.00	343.00

Service availability limited. Refer to # footnote on Page 20-405.

© 2022 Frontier Communications Parent, Inc. All rights reserved

20. Ethernet Private Line (Cont'd)

20.2 Dedicated SONET Ring (DSR) # (Cont'd)

(K) Rates & Charges (Cont'd)

(4) Ports – Nonrecurring Charges (Cont'd)

(a) Initial Installation Charges: Month-to-Month ports only (Cont'd)

(Jurisdiction: Illinois, (C)
Indiana, Michigan, North Carolina, Ohio, (C)
South Carolina, and Wisconsin) (C)

Port Type	First	Additional
OC3c at OC12 Node		
Price Band A	$805.00	$343.00
Price Band B	805.00	343.00
Price Band C	805.00	343.00
N-MSA	805.00	343.00
OC3c at OC48 Node		
Price Band A	805.00	343.00
Price Band B	805.00	343.00
Price Band C	805.00	343.00
N-MSA	805.00	343.00
OC3c at OC192 Node		
Price Band A	805.00	343.00
Price Band B	805.00	343.00
Price Band C	805.00	343.00
N-MSA	805.00	343.00

Service availability limited. Refer to # footnote on Page 20-405.

© 2022 Frontier Communications Parent, Inc. All rights reserved

20. Ethernet Private Line (Cont'd)

20.2 Dedicated SONET Ring (DSR) # (Cont'd)

(K) Rates & Charges (Cont'd)

(4) Ports – Nonrecurring Charges (Cont'd)

(a) Initial Installation Charges: Month-to-Month ports only (Cont'd)

(Jurisdiction: Illinois, (C)
Indiana, Michigan, North Carolina, Ohio, (C)
South Carolina, and Wisconsin) (C)

Port Type	First	Additional
OC12 at OC48 Node		
Price Band A	$767.00	$327.00
Price Band B	767.00	327.00
Price Band C	767.00	327.00
N-MSA	767.00	327.00
OC12 at OC192 Node		
Price Band A	767.00	327.00
Price Band B	767.00	327.00
Price Band C	767.00	327.00
N-MSA	767.00	327.00
OC12c at OC48 Node		
Price Band A	767.00	327.00
Price Band B	767.00	327.00
Price Band C	767.00	327.00
N-MSA	767.00	327.00

Service availability limited. Refer to # footnote on Page 20-405.

© 2022 Frontier Communications Parent, Inc. All rights reserved

20. Ethernet Private Line (Cont'd)

20.2 Dedicated SONET Ring (DSR) # (Cont'd)

(K) Rates & Charges (Cont'd)

(4) Ports – Nonrecurring Charges (Cont'd)

(a) Initial Installation Charges: Month-to-Month ports only (Cont'd)

(Jurisdiction: Illinois, (C)
Indiana, Michigan, North Carolina, Ohio, (C)
South Carolina, and Wisconsin) (C)

Port Type	First	Additional
OC12c at OC192 Node		
Price Band A	$767.00	$327.00
Price Band B	767.00	327.00
Price Band C	767.00	327.00
N-MSA	767.00	327.00
OC48 at OC192 Node		
Price Band A	767.00	327.00
Price Band B	767.00	327.00
Price Band C	767.00	327.00
N-MSA	767.00	327.00
OC48c at OC192 Node		
Price Band A	767.00	327.00
Price Band B	767.00	327.00
Price Band C	767.00	327.00
N-MSA	767.00	327.00

Service availability limited. Refer to # footnote on Page 20-405.

© 2022 Frontier Communications Parent, Inc. All rights reserved

20. Ethernet Private Line (Cont'd)

20.2 Dedicated SONET Ring (DSR) # (Cont'd)

(K) Rates & Charges (Cont'd)
(4) Ports – Nonrecurring Charges (Cont'd)
(a) Initial Installation Charges: Month-to-Month ports only (Cont'd)

(Jurisdiction: Illinois, (C)
Indiana, Michigan, North Carolina, Ohio, (C)
South Carolina, and Wisconsin) (C)

Port Type	First	Additional
Gigabit Ethernet		
GigE1 at OC3 Node		
Price Band A	$767.00	$327.00
Price Band B	767.00	327.00
Price Band C	767.00	327.00
N-MSA	767.00	327.00
GigE1 at OC12 Node		
Price Band A	767.00	327.00
Price Band B	767.00	327.00
Price Band C	767.00	327.00
N-MSA	767.00	327.00
GigE1 at OC48 Node		
Price Band A	767.00	327.00
Price Band B	767.00	327.00
Price Band C	767.00	327.00
N-MSA	767.00	327.00
GigE1 at OC192 Node		
Price Band A	767.00	327.00
Price Band B	767.00	327.00
Price Band C	767.00	327.00
N-MSA	767.00	327.00
GigE3 at OC12 Node		
Price Band A	767.00	327.00
Price Band B	767.00	327.00
Price Band C	767.00	327.00
N-MSA	767.00	327.00
GigE3 at OC48 Node		
Price Band A	767.00	327.00
Price Band B	767.00	327.00
Price Band C	767.00	327.00
N-MSA	767.00	327.00
GigE3 at OC192 Node		
Price Band A	767.00	327.00
Price Band B	767.00	327.00
Price Band C	767.00	327.00
N-MSA	767.00	327.00

Service availability limited. Refer to # footnote on Page 20-405.

© 2022 Frontier Communications Parent, Inc. All rights reserved

20. Ethernet Private Line (Cont'd)

20.2 Dedicated SONET Ring (DSR) # (Cont'd)

(K) Rates & Charges (Cont'd)

(4) Ports – Nonrecurring Charges (Cont'd)

(a) Initial Installation Charges: Month-to-Month ports only (Cont'd)

(Jurisdiction: Illinois, (C)
Indiana, Michigan, North Carolina, Ohio, (C)
South Carolina, and Wisconsin) (C)

Port Type	First	Additional
GigE6 at OC12 Node		
Price Band A	$767.00	$327.00
Price Band B	767.00	327.00
Price Band C	767.00	327.00
N-MSA	767.00	327.00
GigE6 at OC48 Node		
Price Band A	767.00	327.00
Price Band B	767.00	327.00
Price Band C	767.00	327.00
N-MSA	767.00	327.00
GigE6 at OC192 Node		
Price Band A	767.00	327.00
Price Band B	767.00	327.00
Price Band C	767.00	327.00
N-MSA	767.00	327.00
GigE9 at OC12 Node		
Price Band A	767.00	327.00
Price Band B	767.00	327.00
Price Band C	767.00	327.00
N-MSA	767.00	327.00
GigE9 at OC48 Node		
Price Band A	767.00	327.00
Price Band B	767.00	327.00
Price Band C	767.00	327.00
N-MSA	767.00	327.00
GigE9 at OC192 Node		
Price Band A	767.00	327.00
Price Band B	767.00	327.00
Price Band C	767.00	327.00
N-MSA	767.00	327.00

Service availability limited. Refer to # footnote on Page 20-405.

© 2022 Frontier Communications Parent, Inc. All rights reserved

20. Ethernet Private Line (Cont'd)

20.2 Dedicated SONET Ring (DSR) # (Cont'd)

(K) Rates & Charges (Cont'd)

(4) Ports – Nonrecurring Charges (Cont'd)

(a) Initial Installation Charges: Month-to-Month ports only (Cont'd)

(Jurisdiction: Illinois, (C)
Indiana, Michigan, North Carolina, Ohio, (C)
South Carolina, and Wisconsin) (C)

Port Type	First	Additional
GigE12 at OC48 Node		
Price Band A	$767.00	$327.00
Price Band B	767.00	327.00
Price Band C	767.00	327.00
N-MSA	767.00	327.00
GigE12 at OC192 Node		
Price Band A	767.00	327.00
Price Band B	767.00	327.00
Price Band C	767.00	327.00
N-MSA	767.00	327.00
GigE24 at OC48 Node		
Price Band A	767.00	327.00
Price Band B	767.00	327.00
Price Band C	767.00	327.00
N-MSA	767.00	327.00
GigE24 at OC192 Node		
Price Band A	767.00	327.00
Price Band B	767.00	327.00
Price Band C	767.00	327.00
N-MSA	767.00	327.00

Service availability limited. Refer to # footnote on Page 20-405.

© 2022 Frontier Communications Parent, Inc. All rights reserved

20. Ethernet Private Line (Cont'd)

20.2 Dedicated SONET Ring (DSR) # (Cont'd)

(K) Rates & Charges (Cont'd)

(5) Partial Ring

(a) Pass-Through Interface, - per interface

(Jurisdiction: Illinois, (C)
Indiana, Michigan, North Carolina, Ohio, (C)
South Carolina, and Wisconsin) (C)

Pass-Through Interface Type	Monthly Rate 3-Year Term
OC3	
Price Band A	$ 1,330.00
Price Band B	1,330.00
Price Band C	1,330.00
N-MSA	1,330.00
OC12	
Price Band A	2,900.00
Price Band B	2,900.00
Price Band C	2,900.00
N-MSA	2,900.00
OC48	
Price Band A	4,800.00
Price Band B	4,800.00
Price Band C	4,800.00
N-MSA	4,800.00
OC192	
Price Band A	10,000.00
Price Band B	10,000.00
Price Band C	10,000.00
N-MSA	10,000.00

Service availability limited. Refer to # footnote on Page 20-405.

© 2022 Frontier Communications Parent, Inc. All rights reserved

20. Ethernet Private Line (Cont'd)

20.2 Dedicated SONET Ring (DSR) # (Cont'd)

(K) Rates & Charges (Cont'd)

(5) Partial Ring (Cont'd)

(a) Pass-Through Interface, - per interface (Cont'd)

(Jurisdiction: Illinois, (C)
Indiana, Michigan, North Carolina, Ohio, (C)
South Carolina, and Wisconsin) (C)

Pass-Through Interface Type	Monthly Rate 5-Year Term
OC3	
Price Band A	$1,290.00
Price Band B	1,290.00
Price Band C	1,290.00
N-MSA	1,290.00
OC12	
Price Band A	2,700.00
Price Band B	2,700.00
Price Band C	2,700.00
N-MSA	2,700.00
OC48	
Price Band A	4,604.00
Price Band B	4,604.00
Price Band C	4,604.00
N-MSA	4,604.00
OC192	
Price Band A	9,200.00
Price Band B	9,200.00
Price Band C	9,200.00
N-MSA	9,200.00

Service availability limited. Refer to # footnote on Page 20-405.

© 2022 Frontier Communications Parent, Inc. All rights reserved

20. Ethernet Private Line (Cont'd)

20.2 Dedicated SONET Ring (DSR) # (Cont'd)

(K) Rates & Charges (Cont'd)

(5) Partial Ring (Cont'd)

(a) Pass-Through Interface, - per interface (Cont'd)

(Jurisdiction: Illinois, (C)
Indiana, Michigan, North Carolina, Ohio, (C)
South Carolina, and Wisconsin) (C)

Pass-Through Interface Type	Monthly Rate 7-Year Term
OC3	
Price Band A	$1,186.00
Price Band B	1,186.00
Price Band C	1,186.00
N-MSA	1,186.00
OC12	
Price Band A	2,430.00
Price Band B	2,430.00
Price Band C	2,430.00
N-MSA	2,430.00
OC48	
Price Band A	4,143.00
Price Band B	4,143.00
Price Band C	4,143.00
N-MSA	4,143.00
OC192	
Price Band A	8,280.00
Price Band B	8,280.00
Price Band C	8,280.00
N-MSA	8,280.00

Service availability limited. Refer to # footnote on Page 20-405.

© 2022 Frontier Communications Parent, Inc. All rights reserved

20. Ethernet Private Line (Cont'd)

20.2 Dedicated SONET Ring (DSR) # (Cont'd)

(K) Rates & Charges (Cont'd)

(5) Partial Ring (Cont'd)
(b) Channel Mapping, per channel mapped on a partial ring

(Jurisdiction: Illinois, (C)
Indiana, Michigan, North Carolina, Ohio, (C)
South Carolina, and Wisconsin) (C)

Channel Type	Nonrecurring Charge
DS1	
Price Band A	$150.00
Price Band B	150.00
Price Band C	150.00
N-MSA	150.00
DS3 or STS1	
Price Band A	150.00
Price Band B	150.00
Price Band C	150.00
N-MSA	150.00
OC3	
Price Band A	150.00
Price Band B	150.00
Price Band C	150.00
N-MSA	150.00
OC3c	
Price Band A	150.00
Price Band B	150.00
Price Band C	150.00
N-MSA	150.00
OC12	
Price Band A	150.00
Price Band B	150.00
Price Band C	150.00
N-MSA	150.00

Service availability limited. Refer to # footnote on Page 20-405.

© 2022 Frontier Communications Parent, Inc. All rights reserved

20. Ethernet Private Line (Cont'd)

20.2 Dedicated SONET Ring (DSR) # (Cont'd)

(K) Rates & Charges (Cont'd)

(5) Partial Ring (Cont'd)

(b) Channel Mapping, per channel mapped on a partial ring

(Jurisdiction: Illinois, (C)
Indiana, Michigan, North Carolina, Ohio, (C)
South Carolina, and Wisconsin) (C)

Channel Type	Nonrecurring Charge
OC12c	
Price Band A	$150.00
Price Band B	150.00
Price Band C	150.00
N-MSA	150.00
OC48	
Price Band A	150.00
Price Band B	150.00
Price Band C	150.00
N-MSA	150.00
OC48c	
Price Band A	150.00
Price Band B	150.00
Price Band C	150.00
N-MSA	150.00
GigE1	
Price Band A	150.00
Price Band B	150.00
Price Band C	150.00
N-MSA	150.00
GigE3	
Price Band A	150.00
Price Band B	150.00
Price Band C	150.00
N-MSA	150.00

Service availability limited. Refer to # footnote on Page 20-405.

© 2022 Frontier Communications Parent, Inc. All rights reserved

20. Ethernet Private Line (Cont'd)

20.2 Dedicated SONET Ring (DSR) # (Cont'd)

(K) Rates & Charges (Cont'd)

(5) Partial Ring (Cont'd)

(b) Channel Mapping, per channel mapped on a partial ring

(Jurisdiction: Illinois, (C)
Indiana, Michigan, North Carolina, Ohio, (C)
South Carolina, and Wisconsin) (C)

Channel Type	Nonrecurring Charge
GigE6	
Price Band A	$150.00
Price Band B	150.00
Price Band C	150.00
N-MSA	150.00
GigE9	
Price Band A	150.00
Price Band B	150.00
Price Band C	150.00
N-MSA	150.00
GigE12	
Price Band A	150.00
Price Band B	150.00
Price Band C	150.00
N-MSA	150.00
GigE24	
Price Band A	150.00
Price Band B	150.00
Price Band C	150.00
N-MSA	150.00

Service availability limited. Refer to # footnote on Page 20-405.

© 2022 Frontier Communications Parent, Inc. All rights reserved

20. Ethernet Private Line (Cont'd)

20.2 Dedicated SONET Ring (DSR) # (Cont'd)

(K) Rates and Charges (Cont'd)

(6) Reserved

(7) Optional Features

(a) Customer Service Management Optional Feature (CSM)

(1) Service Level, per ring

Service Level	Monthly Rate
Level 1: Network View only	
3-Year	
N-MSA	$250.00
Price Band A	250.00
Price Band B	250.00
Price Band C	250.00
5-Year	
N-MSA	250.00
Price Band A	250.00
Price Band B	250.00
Price Band C	250.00
7-Year	
N-MSA	250.00
Price Band A	250.00
Price Band B	250.00
Price Band C	250.00

Service availability limited. Refer to # footnote on Page 20-405.

© 2022 Frontier Communications Parent, Inc. All rights reserved

20. Ethernet Private Line (Cont'd)

20.2 Dedicated SONET Ring (DSR) # (Cont'd)

(K) Rates and Charges (Cont'd)

(7) Optional Features (Cont'd)

(a) Customer Service Management Optional Feature (CSM) (Cont'd)

(1) Service Level, per ring (Cont'd)

Service Level	Monthly Rate
Level 2: Network View & Basic Reports	
3-Year	
N-MSA	$450.00
Price Band A	450.00
Price Band B	450.00
Price Band C	450.00
5-Year	
N-MSA	450.00
Price Band A	450.00
Price Band B	450.00
Price Band C	450.00
7-Year	
N-MSA	450.00
Price Band A	450.00
Price Band B	450.00
Price Band C	450.00

Service availability limited. Refer to # footnote on Page 20-405.

© 2022 Frontier Communications Parent, Inc. All rights reserved

20. Ethernet Private Line (Cont'd)

20.2 Dedicated SONET Ring (DSR) # (Cont'd)

(K) Rates and Charges (Cont'd)

(7) Optional Features (Cont'd)

(a) Customer Service Management Optional Feature (CSM) (Cont'd)

(1) Service Level, per ring (Cont'd)

Service Level	Monthly Rate
Level 3: Network View, Basic Reports & Reconfiguration	
3-Year	
N-MSA	$850.00
Price Band A	850.00
Price Band B	850.00
Price Band C	850.00
5-Year	
N-MSA	850.00
Price Band A	850.00
Price Band B	850.00
Price Band C	850.00
7-Year	
N-MSA	850.00
Price Band A	850.00
Price Band B	850.00
Price Band C	850.00

Service availability limited. Refer to # footnote on Page 20-405.

© 2022 Frontier Communications Parent, Inc. All rights reserved

20. Ethernet Private Line (Cont'd)

20.2 Dedicated SONET Ring (DSR) # (Cont'd)

(K) Rates and Charges (Cont'd)

(7) Optional Features (Cont'd)

(a) Customer Service Management Optional Feature (CSM) (Cont'd)

(2) Preplanned Port, per port — Rates and Charges are the same as those set forth in (K)(4) preceding.

	Nonrecurring Charge
(3) Node Setup, per node on the ring equipped during initial establishment	
N-MSA	$200.00
Price Band A	200.00
Price Band B	200.00
Price Band C	200.00
(4) Initial CSM Setup, first partition with up to 6 users	
N-MSA	500.00
Price Band A	500.00
Price Band B	500.00
Price Band C	500.00
(5) Setup of additional Partition or change in CSM Service Level, each	
N-MSA	500.00
Price Band A	500.00
Price Band B	500.00
Price Band C	500.00

Service availability limited. Refer to # footnote on Page 20-405.

© 2022 Frontier Communications Parent, Inc. All rights reserved

20. Ethernet Private Line (Cont'd)

20.2 Dedicated SONET Ring (DSR) # (Cont'd)

(K) Rates and Charges (Cont'd)

(7) Optional Features (Cont'd)

(a) Customer Service Management Optional Feature (CSM) (Cont'd)

	Nonrecurring Charge
(6) Setup of Additional Users, up to 6 additional Users	
N-MSA	$350.00
Price Band A	350.00
Price Band B	350.00
Price Band C	350.00
(7) Add/Remove Node, per node added to, or removed from, the CSM ring	
N-MSA	200.00
Price Band A	200.00
Price Band B	200.00
Price Band C	200.00
(8) Telephone Company performed Reconfiguration, per mapping	
N-MSA	300.00
Price Band A	300.00
Price Band B	300.00
Price Band C	300.00
(9) Consultation and Support, each 30 minutes or fraction thereof	
N-MSA	100.00
Price Band A	100.00
Price Band B	100.00
Price Band C	100.00

Service availability limited. Refer to # footnote on Page 20-405.

© 2022 Frontier Communications Parent, Inc. All rights reserved

20. Ethernet Private Line (Cont'd)

20.2 Dedicated SONET Ring (DSR) # (Cont'd)

(K) Rates and Charges (Cont'd)

(8) Asymmetrical Port Facility (APF)
(a) Monthly Rates, per APF
(Jurisdiction: Illinois, (C)
Indiana, Michigan, North Carolina, Ohio, (C)
South Carolina, and Wisconsin) (C)

(1) Month to Month Billing

APF Type	Monthly Rate
OC3 APF	
- OC3 Mileage, per mile	$ 500.00
- OC3 Channel Extension, each	3,800.00
OC12 APF	
- OC12 Mileage, per mile	1,000.00
- OC12 Channel Extension, each	7,000.00
OC48 APF	
- OC48 Mileage, per mile	3,500.00
- OC48 Channel Extension, each	11,000.00

(2) Term Plan Billing

APF Type	Monthly Rate 3-Year Term
OC3 APF	
- OC3 Mileage, per mile	$ 375.00
- OC3 Channel Extension, each	2,850.00
OC12 APF	
- OC12 Mileage, per mile	750.00
- OC12 Channel Extension, each	5,500.00
OC48 APF	
- OC48 Mileage, per mile	2,625.00
- OC48 Channel Extension, each	7,500.00

Service availability limited. Refer to # footnote on Page 20-405.

© 2022 Frontier Communications Parent, Inc. All rights reserved

20. Ethernet Private Line (Cont'd)

20.2 Dedicated SONET Ring (DSR) # (Cont'd)

(K) Rates and Charges (Cont'd)

(8) Asymmetrical Port Facility (APF) (Cont'd)

(a) Monthly Rates, per APF (Cont'd)

(Jurisdiction: Illinois, (C)
Indiana, Michigan, North Carolina, Ohio, (C)
South Carolina, and Wisconsin) (C)

(2) Term Plan Billing (Cont'd)

APF Type	Monthly Rate 5-Year Term
OC3 APF	
- OC3 Mileage, per mile	$ 337.50
- OC3 Channel Extension, each	2,565.00
OC12 APF	
- OC12 Mileage, per mile	675.00
- OC12 Channel Extension, each	4,500.00
OC48 APF	
- OC48 Mileage, per mile	2,362.50
- OC48 Channel Extension, each	6,350.00

APF Type	Monthly Rate 7-Year Term
OC3 APF	
- OC3 Mileage, per mile	$ 303.75
- OC3 Channel Extension, each	2,308.50
OC12 APF	
- OC12 Mileage, per mile	607.50
- OC12 Channel Extension, each	4,050.00
OC48 APF	
- OC48 Mileage, per mile	2,126.25
- OC48 Channel Extension, each	5,715.00

Service availability limited. Refer to # footnote on Page 20-405.

© 2022 Frontier Communications Parent, Inc. All rights reserved

20. Ethernet Private Line (Cont'd)

20.2 Dedicated SONET Ring (DSR) # (Cont'd)

(K) Rates and Charges (Cont'd)

(8) Asymmetrical Port Facility (APF) (Cont'd)

(b) Nonrecurring Charges

(Jurisdiction: Illinois, (C)
Indiana, Michigan, North Carolina, Ohio, (C)
South Carolina, and Wisconsin) (C)

(1) APF Mapping Charge,
- per lower capacity channel mapped between two APFs on the same DSR

Channel Type	Nonrecurring Charge
All Channel Types	$500.00

Service availability limited. Refer to # footnote on Page 20-405.

© 2022 Frontier Communications Parent, Inc. All rights reserved

20. Ethernet Private Line (Cont'd)

20.2 Dedicated SONET Ring (DSR) # (Cont'd)

(K) Rates and Charges (Cont'd)

(9) Subtending Node Facility (SNF)

(a) Monthly Rates, per SNF extended

(Jurisdiction: Illinois, (C)
Indiana, Michigan, North Carolina, Ohio, (C)
South Carolina, and Wisconsin) (C)

(1) Term Plan Billing

SNF Type	Monthly Rate 3-Year Term
OC3 SNF	
- OC3 Mileage, per mile	$ 375.00
- OC3 Channel Extension, each	2,850.00
OC12 SNF	
- OC12 Mileage, per mile	750.00
- OC12 Channel Extension, each	5,500.00
OC48 SNF	
- OC48 Mileage, per mile	2,625.00
- OC48 Channel Extension, each	7,500.00

(2) Term Plan Billing

SNF Type	Monthly Rate 5-Year Term
OC3 SNF	
- OC3 Mileage, per mile	$ 337.50
- OC3 Channel Extension, each	2,565.00
OC12 SNF	
- OC12 Mileage, per mile	675.00
- OC12 Channel Extension, each	4,500.00
OC48 SNF	
- OC48 Mileage, per mile	2,362.50
- OC48 Channel Extension, each	6,350.00

Service availability limited. Refer to # footnote on Page 20-405.

© 2022 Frontier Communications Parent, Inc. All rights reserved

20. Ethernet Private Line (Cont'd)

20.2 Dedicated SONET Ring (DSR) # (Cont'd)

(K) Rates and Charges (Cont'd)

(9) Subtending Node Facility (SNF) (Cont'd)

(a) Monthly Rates, per SNF extended (Cont'd)

(Jurisdiction: Illinois, (C)
Indiana, Michigan, North Carolina, Ohio, (C)
South Carolina, and Wisconsin) (C)

(1) Term Plan Billing (Cont'd)

SNF Type	Monthly Rate 7-Year Term
OC3 SNF	
- OC3 Mileage, per mile	$ 303.75
- OC3 Channel Extension, each	2,308.50
OC12 SNF	
- OC12 Mileage, per mile	607.50
- OC12 Channel Extension, each	4,050.00
OC48 SNF	
- OC48 Mileage, per mile	2,126.25
- OC48 Channel Extension, each	5,715.00

Service availability limited. Refer to # footnote on Page 20-405.

© 2022 Frontier Communications Parent, Inc. All rights reserved

20. Ethernet Private Line (Cont'd)

20.2 Dedicated SONET Ring (DSR) # (Cont'd)

(K) Rates and Charges (Cont'd)

(9) Subtending Node Facility (SNF) (Cont'd)

(b) Monthly Rates, per port node

(Jurisdiction: Illinois, (C)
Indiana, Michigan, North Carolina, Ohio, (C)
South Carolina, and Wisconsin) (C)

Port Node Type	Monthly Rate 3-Year Rate
- OC3 at OC3 Node	$ 600.00
- OC3 at OC12 Node	600.00
- OC3 at OC48 Node	600.00
- OC3 at OC192 Node	600.00
OC12 at OC12 Node	850.00
- OC12 at OC48 Node	850.00
- OC12 at OC192 Node	850.00
- OC48 at OC48 Node	1,800.00
- OC48 at OC192 Node	1,800.00
- OC192 at OC192 Node	4,500.00

Service availability limited. Refer to # footnote on Page 20-405.

© 2022 Frontier Communications Parent, Inc. All rights reserved

20. Ethernet Private Line (Cont'd)

20.2 Dedicated SONET Ring (DSR) # (Cont'd)

(K) Rates and Charges (Cont'd)

(9) Subtending Node Facility (SNF) (Cont'd)

(b) Monthly Rates, per port node (Cont'd)

(Jurisdiction: Illinois, (C)
Indiana, Michigan, North Carolina, Ohio, (C)
South Carolina, and Wisconsin) (C)

Port Node Type	Monthly Rate 5-Year Rate
- OC3 at OC3 Node	$ 500.00
- OC3 at OC12 Node	500.00
- OC3 at OC48 Node	500.00
- OC3 at OC192 Node	500.00
- OC12 at OC12 Node	750.00
- OC12 at OC48 Node	750.00
- OC12 at OC192 Node	750.00
- OC48 at OC48 Node	1,600.00
- OC48 at OC192 Node	1,600.00
- OC192 at OC192 Node	3,800.00

Service availability limited. Refer to # footnote on Page 20-405.

© 2022 Frontier Communications Parent, Inc. All rights reserved

20. Ethernet Private Line (Cont'd)

20.2 Dedicated SONET Ring (DSR) # (Cont'd)

(K) Rates and Charges (Cont'd)

(9) Subtending Node Facility (SNF) (Cont'd)

(a) Monthly Rates, per port node (Cont'd)

(Jurisdiction: Illinois, (C)
Indiana, Michigan, North Carolina, Ohio, (C)
South Carolina, and Wisconsin) (C)

Port Node Type	Monthly Rate 7-Year Rate
- OC3 at OC3 Node	$ 450.00
- OC3 at OC12 Node	450.00
- OC3 at OC48 Node	450.00
- OC3 at OC192 Node	450.00
- OC12 at OC12 Node	700.00
- OC12 at OC48 Node	700.00
- OC12 at OC192 Node	700.00
- OC48 at OC48 Node	1,500.00
- OC48 at OC192 Node	1,500.00
- OC192 at OC192 Node	3,000.00

Service availability limited. Refer to # footnote on Page 20-405.

© 2022 Frontier Communications Parent, Inc. All rights reserved

20. Ethernet Private Line (Cont'd)

20.2 Dedicated SONET Ring (DSR) # (Cont'd)

(K) Rates and Charges (Cont'd)

(10) Dual Node Cross-Connect Charge,
- per lower capacity channel provided through two interconnecting nodes in a subtending ring arrangement

(Jurisdiction: Illinois, (C)
Indiana, Michigan, North Carolina, Ohio, (C)
South Carolina, and Wisconsin) (C)

Channel Type	Nonrecurring Charge
All Channel Types	$500.00

Service availability limited. Refer to # footnote on Page 20-405.

© 2022 Frontier Communications Parent, Inc. All rights reserved

20. Ethernet Private Line (Cont'd)

20.3 Ethernet Private Line #

(A) General

(1) Ethernet Private Line service provides managed optical transport of data signals of various speeds over the Telephone Company's shared network. Ethernet Private Line architecture allows for point-to-point transmissions of varying bandwidths between customer designated locations or between a customer designated location and a collocation arrangement where a customer is provided EIS as described in Section 17 preceding.

(2) Ethernet Private Line is provided where Telephone Company fiber optic facilities and equipment with sufficient bandwidth capacity permit.

(B) Service Description

(1) Ethernet Private Line service consists of 3 components, an On-Net Channel Extension, On-Net Channel Mileage, and an Access Aggregation.

(a) On-Net Channel Extension provides the communications path and interface termination from a customer's location to the serving wire center or between the customer premise and service wire center where customer has Expanded Interconnection Service pursuant to Section 17 of this Guide. The On-Net Channel Extension utilizes a Telephone Company optical network element at the customer-designated location.

(b) On-Net Channel Mileage provides transport between two telephone company Serving Wire Centers (SWCs). On-Net Channel Mileage is measured in airline miles between the SWCs involved.

(c) Access Aggregation Ports support multiple Ethernet, Fibre Channel, and/or FICON signal(s) that are mapped into SONET at one end of the channel.

Effective March 30, 2007, orders for new are no longer permitted. The Telephone Company will continue to provide Ethernet Private Line pursuant to this Section 20.3 on any existing Ethernet Private Line that is in-service as of March 30, 2007, or any order for Ethernet Private Line that is placed with the Telephone Company prior to March 29, 2007 (collectively, Existing Ethernet Private Line Ethernet Private Line), subject to the following conditions:

a. For any Existing Ethernet Private Line that is currently subscribed to a term plan (i.e., commitment periods of 1-, 3-, 5-, and 7-years), the Telephone Company will continue to provide the Existing Ethernet Private Line for an additional six (6) months beyond the expiration date of the customer's current commitment period, or until the customer replaces the Existing Ethernet Private Line with a comparable Telephone Company provided service, or discontinues service, whichever comes first. Effective March 30, 2007, moves, additions and/or changes are not permitted.

b. For any Existing Ethernet Private Line whose term plan expired prior to March 30, 2007, but the Existing Ethernet Private Line continued on a month-to-month basis at prevailing rates, the Telephone Company will continue to provide the Existing Ethernet Private Line until September 30, 2007, or until the customer replaces the Existing Ethernet Private Line with a comparable Telephone Company provided service, or discontinues service, whichever comes first. Effective March 30, 2007, moves, additions, and/or changes are not permitted.

© 2022 Frontier Communications Parent, Inc. All rights reserved

20. Ethernet Private Line (Cont'd)

20.3 Ethernet Private Line # (Cont'd)

(B) Service Description (Cont'd)

(2) Ethernet Private Line Channel Extensions may be available as protected or unprotected.

(a) For protected services, the Telephone Company will provision the service over diversely routed, self-healing architecture. Protected services allow for a near 100% availability and restoration in the event of a network failure.

(b) For unprotected services, the Telephone Company does not guarantee the service will be provisioned over diversely routed facilities.

(3) The On-Net Aggregation Port will only be permitted at a customer premises location. The Access Aggregation is not available to an Expanded Interconnection location.

(a) This port must utilize a SONET interface (i.e., OC3, OC12, OC48) at the customer demarcation point. A Ethernet Private Line Aggregation Port can only reside at one end of a Ethernet Private Line circuit. The end of a Ethernet Private Line circuit that is not assigned to a Ethernet Private Line Access Aggregation Port must have a native Ethernet hand-off.

(4) Channel Interfaces

SONET Mapped Interface	SONET Mappings & Ports	
	STS1s	Aggregation Port
100 Mbps Ethernet (50Mb) Mapped to STS1	1 - STS1	OC3, OC12, OC48
100 Mbps Ethernet (Full Rate) Mapped to OC3c	3 - STS1s	OC12, OC48
1 Gbps Ethernet (50Mb) Mapped to OC3	1 - STS1	OC3, OC12, OC48
1 Gbps Ethernet (150Mb) Mapped to OC3	3 - STS1s	OC12, OC48
1 Gbps Ethernet (300Mb) Mapped to OC12	6 - STS1s	OC12, OC48
1 Gbps Ethernet (450Mb) Mapped to OC12	9 - STS1s	OC12, OC48
1 Gbps Ethernet (600Mb) Mapped to OC12	12 - STS1s	OC48
1 Gbps Ethernet (Full Rate) Mapped to OC48	21 - STS1s	OC48
1 Gbps Fibre Channel (Full Rate) Mapped to OC48	19 - STS1s	OC48
1 Gbps FICON (Full Rate) Mapped to OC48	19 - STS1s	OC48

Service availability limited. Refer to # footnote on Page 20-525.

© 2022 Frontier Communications Parent, Inc. All rights reserved

20. Ethernet Private Line (Cont'd)

20.3 Ethernet Private Line # (Cont'd)

(B) Service Description (Cont'd)

(4) Channel Interfaces (Cont'd)

Aggregation Ports	Total STS1s	
OC3 Port - Supports Up to 3 Total Mapped STS1s	3 - Total STS1s	N/A
OC12 Port - Supports Up to 12 Mapped STS1s	12 - Total STS1s	N/A
OC48 Port - Supports Up to 48 Mapped STS1s	48 - Total STS1s	N/A

Service availability limited. Refer to # footnote on Page 20-525.

© 2022 Frontier Communications Parent, Inc. All rights reserved

20. Ethernet Private Line (Cont'd)

20.3 Ethernet Private Line # (Cont'd)

(B) Service Description (Cont'd)

(5) Ethernet Private Line service transmissions are provided in the following protocols/data interfaces:

- Ethernet: transmits Ethernet at 10 Mbps
- Fast Ethernet: transmits at 100 Mbps
- Gigabit Ethernet: transmits at 1 Gbps.
- Gigabit Fibre Channel: transmits at 1 Gbps.
- Gigabit FICON: transmits at 1 Gbps.
- Ethernet mapped to STS1
- Fast Ethernet Mapped to STS1
- Fast Ethernet Mapped to OC3c
- Gigabit Ethernet Mapped to OC3
- Gigabit Ethernet Mapped to OC12
- Gigabit Ethernet Mapped to OC12c
- Gigabit Ethernet Mapped to OC48
- Gigabit Fibre Channel Mapped to OC48
- Gigabit FICON Mapped to OC48
- Ethernet Private Line Services Mapped to OC3 Access Aggregation Port
- Ethernet Private Line Services Mapped to OC12 Access Aggregation Port
- Ethernet Private Line Services Mapped to OC48 Access Aggregation Port

(6) Ethernet Private Line services may connect to other Telephone Company services capable of transmitting the specified protocol.

(a) A Ethernet Private Line Ethernet-to-SONET mapped service may be multiplexed onto an Express Connect * of a higher bit rate or a Flex Express Connect * of a higher bit rate.

Service availability limited. Refer to # footnote on Page 20-525.

© 2022 Frontier Communications Parent, Inc. All rights reserved

20. Ethernet Private Line (Cont'd)

20.3 Ethernet Private Line # (Cont'd)

(B) Service Description (Cont'd)

(6) (Cont'd)

(b) A Ethernet Private Line Ethernet-to-SONET mapped service may connect to an equal speed Custom Connect Rider at a Single Route CDL, Diverse Route CDL, or a CO Node. When connecting to Custom Connect services a CDL Link or Rider as set forth in Section 20(1)(j) preceding will apply. Ethernet Private Line services cannot terminate on a customer provided node of a connecting service.

(c) A Ethernet Private Line Ethernet mapped to STS1; Fast Ethernet mapped to STS1 and/or OC3c; Gigabit Ethernet mapped to OC3, OC12, OC12c and/or OC48 service may be multiplexed onto a port on a higher speed node of a Dedicated SONET Ring (DSR) service for transport over the higher bit rate DSR.

(d) (reserved)

(e) A Ethernet Private Line Gigabit 50, 150, 300, 450 or 600 Mbps Partial Rate and/or Full Rate Ethernet service may be multiplexed onto a port of a higher speed node of a Dedicated SONET Ring (DSR) service for transport over the higher bit rate DSR at an equivalent speed GigE.

(f) A Ethernet Private Line Fast Ethernet mapped to OC3c and/or Gigabit Ethernet mapped to OC12c service may connect to an equal speed Optical Transport Channel of an Dedicated SONET Optical Transport Service (DSOTS)ring at a node on the DSOTS ring.

(g) A Ethernet Private Line Gigabit Full Rate Ethernet service may connect to Gigabit Ethernet Optical Transport Channel of an Dedicated SONET Optical Transport Service (DSOTS) at a node on the DSOTS ring.

(h) A Ethernet Private Line Gigabit Fibre Channel and/or Gigabit FICON service may be connected to a Gigabit Fibre Channel and/or Gigabit FICON Optical Transport Channel on an Dedicated SONET Optical Transport Service (DSOTS) at a node on the DSOTS ring.

(i) A Ethernet Private Line Gigabit 50, 150, 300, 450 or 600 Mbps Partial Rate and/or Full Rate Ethernet service may connect to a collocation arrangement where a customer is provided EIS as described in Section 17 preceding.

(j) A Ethernet Private Line Full Rate Gigabit Ethernet service may connect, as native Ethernet to native Ethernet only, from a customer designated location to a wire center where connection to a Ethernet LAN Service (ELS) Network-to-Network Interface (NNI) Port Only Connection occurs. Regulations, rates and charges for ELS NNI Port Only Connection are set forth in the Telephone Company's Tariff FCC No. 8, Section 5, Part II, Section 5.11. An Ethernet-to-SONET mapped option is not available on any Ethernet Private Line circuit which connects to a ELS NNI Port Only Connection.

Service availability limited. Refer to # footnote on Page 20-525.

© 2022 Frontier Communications Parent, Inc. All rights reserved

20. Ethernet Private Line (Cont'd)

20.3 Ethernet Private Line # (Cont'd)

(B) Service Description (Cont'd)

(6) (Cont'd)

(k) A Ethernet Private Line Full Rate Gigabit Ethernet service may connect, as native Ethernet to native Ethernet only, from an Expanded Interconnection Service (EIS) arrangement, as set forth in Section 17 preceding, to another wire center (i.e., other than the wire center where the EIS arrangement is provided) where connection to a Ethernet LAN Service (ELS)Network-to-Network Interface (NNI) Port Only Connection occurs. Regulations, rates and charges for ELS NNI Port Only Connection are set forth in The Frontier Telephone Companies Tariff FCC No. 8, Section 5, Part II, Section 5.11. An Ethernet-to-SONET mapped option is not available on any Ethernet Private Line circuit which connects to a ELS NNI Port Only Connection.

(l) (Reserved)

Ethernet Private Line may also be connected to the following Telephone Company provided services, where such connections are technically and operationally feasible, as determined by the Telephone Company.

- dedicated SONET ring service
- point-to-point SONET service
- optical hubbing service
- DWDM ring service
- SONET entrance facility service
- switched ethernet service

(C) Technical Specifications

The technical specifications for the protocols transmitted over Ethernet Private Line are delineated in the following technical publications:

Protocol	Publication
SONET	GR-253-CORE, Issue 4
10 Mbps Ethernet	IEEE 802.3-2005/Cor2/D2.0-2007
100 Mbps Fast Ethernet	IEEE.802.3u-1995
1 Gbps Ethernet	IEEE 802.3z-1998
1 Gbps Fibre Channel	ANSI-INCITS 303-1998 (R2003)
1 Gbps FICON	ANSI INCITS 296-1997 (R2007)

Service availability limited. Refer to # footnote on Page 20-525.

© 2022 Frontier Communications Parent, Inc. All rights reserved

20. Ethernet Private Line (Cont'd)

20.3 Ethernet Private Line # (Cont'd)

(C) Technical Specifications

The technical specifications for the protocols transmitted over Ethernet Private Line are delineated in the following technical publications:

Protocol	Publication
SONET	GR-253-CORE, Issue 4
10 Mbps Ethernet	IEEE 802.3-2005/Cor2/D2.0-2007
100 Mbps Fast Ethernet	IEEE.802.3u-1995
1 Gbps Ethernet	IEEE 802.3z-1998
1 Gbps Fibre Channel	ANSI-INCITS 303-1998 (R2003)
1 Gbps FICON	ANSI INCITS 296-1997 (R2007)

Terms and Conditions

(1) A planning session is required prior to the submission of an order for Ethernet Private Line. Ethernet Private Line is available based on negotiated intervals subject to Section 3.2.1 preceding.

(2) Where distance limitations affect the Telephone Company's ability to engineer end-to-end transport of some protocols, the Telephone Company will notify the customer that it cannot provide the requested service.

(3) All signals generated by the customer's equipment (CPE/customer provided equipment) must meet industry standards and specifications. See (C) of this section preceding.

(4) The customer is responsible to ensure that its equipment meets any applicable technical requirements or limitations for the protocol being transmitted.

(5) The customer is responsible for any error detection and error correction of the data generated by its equipment.

(6) The Telephone company assumes no responsibility for the quality of the signal generated by CPE and will deliver the signal in the format provided by the customer.

Service availability limited. Refer to # footnote on Page 20-525.

© 2022 Frontier Communications Parent, Inc. All rights reserved

20. Ethernet Private Line (Cont'd)

20.3 Ethernet Private Line # (Cont'd)

Terms and Conditions (Cont'd)

(7) When requested by the customer, one or more Ethernet Private Line Ethernet, Fast Ethernet, Gigabit Ethernet, Gigabit Fibre Channel, and/or FICON signal(s) may be mapped into a SONET signal. The options for mapping a single signals are:

- 10 Mbps Ethernet to STS1
- 100 Mbps Fast Ethernet to STS1, OC3c
- 1 Gbps Gigabit Ethernet to OC3, OC12, OC12c, OC48
- 1 Gbps Gigabit Fibre Channel to OC48
- 1 Gbps Gigabit FICON to OC48

The options for mapping multiple signals are:

- 10 Mbps Ethernet to OC3, OC12, OC48
- 100 Mbps Fast Ethernet to OC3, OC12, OC48
- 1 Gbps Gigabit Ethernet to OC3, OC12, OC48
- 1 Gbps Gigabit Fibre Channel to OC48
- 1 Gbps Gigabit FICON to OC48

Only one end of a Ethernet Private Line channel may be Ethernet-to-SONET mapped. Mapping of multiple signals requires placement of a Ethernet Private Line Access Aggregation Port as described in (B)(4) preceding.

Ethernet-to-SONET mapped option is not available on any Ethernet Private Line circuit which connects to an Expanded Interconnection arrangement pursuant to Section 17 preceding. A Ethernet Private Line circuit which connects to an Expanded Interconnection arrangement is not allowed to connect to any other Telephone Company service. When a Ethernet Private Line circuit connects to an Expanded Interconnection arrangement, no additional Channel Extension charges apply as a result of the connection to the Expanded Interconnection arrangement. When Ethernet Private Line connects to an Expanded Interconnection arrangement, the Ethernet Private Line circuit will be cross-connected to the Expanded Interconnection arrangement, and all rates and charges for such Expanded Interconnection arrangement as set forth in Section 17 preceding shall apply in addition to any charges for Ethernet Private Line .

An Access Aggregation port option is not available on any Ethernet Private Line circuit connecting to an Expanded Interconnection arrangement.

(8) Where facilities, conditions, and/or sufficient bandwidth capacity permit, the Telephone Company, upon customer request, may provide a diverse fiber path between the customer designated location and its Serving Wire Center. Rates and charges may apply as specified in the Special Construction tariff.

Service availability limited. Refer to # footnote on Page 20-525.

© 2022 Frontier Communications Parent, Inc. All rights reserved

20. Ethernet Private Line (Cont'd)

20.3 Ethernet Private Line # (Cont'd)

(E) Rate Regulations

(1) Ethernet Private Line is available for 1, 3, 5, and 7-year commitment periods/term plans.

(2) The minimum service period for Ethernet Private Line is one year.

(3) Upon expiration of a commitment period, the customer may choose to continue service under a new commitment period or cancel service. If the customer does not choose one of these options, the Telephone Company will continue the service at the monthly rate for the original commitment period.

(4) The customer has the option, within sixty (60) days prior to the expiration date for its commitment period, to extend its expiring Plan to a longer commitment period, for which time-in-service credit will be allowed for the expiring plan. The commitment period selected for the extended plan must be longer than the commitment period of the expiring plan, e.g., an expiring 1-Year Term may be extended to either a 3-Year, 5-Year, or 7-Year Commitment period. Time-in-service credit lessens the actual time commitment for the extended plan. For example, Time in Service Credit for an expiring 3-Year term plan applied toward a new 7-year plan equals a new commitment period of 4 years at the 7-year plan rate. The rate for the longer commitment period will apply effective with the first bill day following expiration of the commitment period for the existing plan and continue through the remainder of the commitment period associated with the extended plan. No adjustment for the increased discount associated with the extended plan will be made to the monthly rates already billed on the expiring plan.

(5) A change in protocol of an On-Net Channel Extension is treated as a discontinuance of service and an installation of both, a new On-Net Channel Extension and the appropriate On-Net Channel Mileage, and will result in Termination Liability Charges applied for the discontinuance of the existing service.

(6) Monthly recurring charges (MRCs) apply for On-Net Channel Extensions, On-Net Channel Mileage, and Access Aggregation Ports.

(7) The MRC for the Channel Extension applies per channel extension and at the specified term plan rate. The On-Net Channel Extension charge is also dependent on the type of facility interface provided.

(8) The MRC for the Channel Mileage applies on a fixed and on a per mile basis for the airline miles between the Serving Wire Centers. When the mileage calculation results in a fraction of a mile, it is rounded up to the next whole mile.

Service availability limited. Refer to # footnote on Page 20-525.

© 2022 Frontier Communications Parent, Inc. All rights reserved

20. Ethernet Private Line (Cont'd)

20.3 Ethernet Private Line # (Cont'd)

(E) Rate Regulations (Cont'd)

(9) The MRC for the Access Aggregation Port applies per port and at the specified term plan rate. The Access Aggregation Port charge is also dependent on the type of facility interface provided.

(10) Nonrecurring charges (NRCs) apply for the initial installation of On-Net Channel Extensions, On-Net Channel Mileage, and Access Aggregation Ports.

(11) When connecting Ethernet Private Line services to other Telephone Company provided services, the rates and charges, and terms and conditions of the connecting services also apply.

(12) When connecting a Ethernet Private Line circuit to an Expanded Interconnection arrangement pursuant to Section 17 preceding, the MRC for the Channel Extension that provides the communications path and interface termination from a customer's premises to the Telephone Company's wire center will apply at the specified term plan rate as set forth in Section 20.3(H) following. The MRC for the Channel Extension rate element will not apply at the EIS arrangement end of the service. Customer shall also be charged an MRC for the Channel Mileage at the specified term plan rate on a fixed and on a per mile basis for the airline miles between the Serving Wire Centers, if applicable. In addition to charges described herein, any other charges associated with connecting Ethernet Private Line to an Expanded Interconnection arrangement are described in Section 17 preceding.

(13) When a Ethernet Private Line circuit is ordered from a customer designated premise to a wire center where connection to a ELS NNI Port Only Connection occurs, as set forth in Section 20.3(B)(6)(j) preceding, the Channel Extension rate element at the customer designated premise will apply at the specified term plan rate, as set forth in Section 20.3(H) following. The NNI Port Only Connection rate element will apply in lieu of the Channel Extension rate element at the ELS end of the service. The customer shall also be charged Ethernet Private Line Channel Mileage at the specified term plan rate on a fixed and on a per mile basis for the airline miles between the Serving Wire Centers, if applicable.

(14) When a Ethernet Private Line circuit is ordered to connect a EIS arrangement pursuant to Section 17 following and a ELS NNI Port Only Connection in another wire center, as set forth in Section 20.3(B)(6)(k) preceding, the Channel Extension rate element will not apply at the EIS arrangement end of the service. The NNI Port Only Connection rate element will apply in lieu of the Channel Extension rate element at the ELS end of the service. The customer shall also be charged Ethernet Private Line Channel Mileage at the specified term plan rate on a fixed and on a per mile basis for the airline miles between the serving wire centers. In addition to charges described herein, any other charges associated with a Collocated Interconnection arrangement are described in Section 17 preceding.

Service availability limited. Refer to # footnote on Page 20-525.

© 2022 Frontier Communications Parent, Inc. All rights reserved

20. Ethernet Private Line (Cont'd)

20.3 Ethernet Private Line # (Cont'd)

(E) Rate Regulations (Cont'd)

(15) When a Ethernet Private Line circuit is ordered from a customer designated premises to a wire center where connection to a Telephone Company provided switched ethernet service network-to-network interface port only connection occurs, the Channel Extension rate element at the customer designated premises will apply. The switched ethernet service network-to-network interface port only connection rate element will apply in lieu of the Channel Extension rate element at the switched ethernet service end of the service. The customer shall also be charged Ethernet Private Line Channel Mileage at the specified term plan rate on a fixed and on a per mile basis for the airline miles between the Serving Wire Centers, if applicable.

(16) When a Ethernet Private Line circuit is ordered to connect an Expanded Interconnection arrangement pursuant to Section 17 preceding and a Telephone Company provided switched ethernet service network-to-network interface port only connection in another wire center, the Channel Extension rate element will not apply at the Expanded Interconnection arrangement end of the service. The switched ethernet service network-to-network interface port only connection rate element will apply in lieu of the Channel Extension rate element at the switched ethernet service end of the service. The customer shall also be charged Ethernet Private Line Channel Mileage at the specified term plan rate on a fixed and on a per mile basis for the airline miles between the serving wire centers. In addition to charges described herein, any other charges associated with connecting Ethernet Private Line to an Expanded Interconnection arrangement are described in Section 17 preceding.

(F) Termination Liability

(1) Cancellation charges as set forth in Section 3.2.6(F) preceding apply if an ASR for Ethernet Private Line is cancelled.

(2) The MRCs and NRCs for Ethernet Private Line are listed in (H) following.

(3) Termination liability applies to On-Net Channel Mileage, On-Net Channel Extension and Access Aggregation Port service components and applies when either is disconnected prior to expiration of the commitment period, i.e., term plan.

(4) The termination liability charge is equal to 25% of the remaining monthly charges for the balance of the commitment period beginning with the date of disconnection or cancellation, and ending with the expiration date of the commitment period.

(5) Termination liability applies in addition to any charges associated with satisfying the minimum period obligation.

(6) When the service includes connection to another service, termination liability for the connecting service also applies in accordance with the regulations specified for that connecting service.

Service availability limited. Refer to # footnote on Page 20-525.

© 2022 Frontier Communications Parent, Inc. All rights reserved

20. Ethernet Private Line (Cont'd)

20.3 Ethernet Private Line # (Cont'd)

(F) Termination Liability

(7) Termination liability will not apply if a customer changes its term plan to a longer commitment period as explained in (E) preceding.

(8) Termination liability will not apply to the existing service when; (1) a Ethernet Private Line Ethernet service is upgraded to a higher bit rate Ethernet Private Line Ethernet service (e.g., a Ethernet Private Line Ethernet 10 Mbps service is changed to a Ethernet Private Line Ethernet 100 Mbps service or to a Ethernet Private Line Ethernet 1 Gbps service), and (2), the new term is equal to or of greater length than the term for the terminating service.

(G) Channel Interfaces

The channel interfaces for Ethernet Private Line are as follows.

CIs	CIs	CIs
04LN9.1CT	04ST6.A	04LN9.10T
02LNF.A07	02LNF.A02	02LNF.A04
02SOF.F	02SOF.B	02SOF.X
04SOF.F	04SOF.B	02SOF.D
04SOF.X	04SOF.D	02OPF.A02
02OPF.A04	02OPF.A07	04CMF.C3
04CMF.C12	04CMF.C48	02QBF.K02

Service availability limited. Refer to # footnote on Page 20-525.

© 2022 Frontier Communications Parent, Inc. All rights reserved

20. Ethernet Private Line (Cont'd)

20.3 Ethernet Private Line # (Cont'd)

(H) Rates and Charges

(1) On-Net Channel Extensions, per channel extension

(a) **Protected** Channel Extensions

(Jurisdiction: Illinois (C)
Indiana, Michigan, North Carolina, Ohio, (C)
South Carolina, and Wisconsin) (C)

(1) 1-year Commitment Period/Term Plan

Interface Type	Monthly Rate	Nonrecurring Charge
10 Mbps Ethernet (Full Rate)		
Price Band A	$1,200.00	$1.00
Price Band B	1,200.00	1.00
Price Band C	1,200.00	1.00
N-MSA	1,200.00	1.00
100 Mbps Ethernet (50 Mbps)		
Price Band A	1,920.00	1.00
Price Band B	1,920.00	1.00
Price Band C	1,920.00	1.00
N-MSA	1,920.00	1.00
100 Mbps Ethernet (Full Rate)		
Price Band A	2,630.00	1.00
Price Band B	2,630.00	1.00
Price Band C	2,630.00	1.00
N-MSA	2,630.00	1.00

Service availability limited. Refer to # footnote on Page 20-525.

© 2022 Frontier Communications Parent, Inc. All rights reserved

20. Ethernet Private Line (Cont'd)

20.3 Ethernet Private Line # (Cont'd)

(H) Rates and Charges (Cont'd)

(1) On-Net Channel Extensions, per channel extension (Cont'd)

(a) **Protected** Channel Extensions (Cont'd)

(Jurisdiction: Illinois (C)
Indiana, Michigan, North Carolina, Ohio, (C)
South Carolina, and Wisconsin) (C)

(1) 1-year Commitment Period/Term Plan (Cont'd)

Interface Type	Monthly Rate	Nonrecurring Charge
1 Gbps Ethernet (50 Mbps)		
Price Band A	$1,920.00	$1.00
Price Band B	1,920.00	1.00
Price Band C	1,920.00	1.00
N-MSA	1,920.00	1.00
1 Gbps Ethernet (150 Mbps)		
Price Band A	2,790.00	1.00
Price Band B	2,790.00	1.00
Price Band C	2,790.00	1.00
N-MSA	2,790.00	1.00
1 Gbps Ethernet (300 Mbps)		
Price Band A	3,660.00	1.00
Price Band B	3,660.00	1.00
Price Band C	3,660.00	1.00
N-MSA	3,660.00	1.00
1 Gbps Ethernet (450 Mbps)		
Price Band A	4,530.00	1.00
Price Band B	4,530.00	1.00
Price Band C	4,530.00	1.00
N-MSA	4,530.00	1.00

Service availability limited. Refer to # footnote on Page 20-525.

© 2022 Frontier Communications Parent, Inc. All rights reserved

20. Ethernet Private Line (Cont'd)

20.3 Ethernet Private Line # (Cont'd)

(H) Rates and Charges (Cont'd)

(1) On-Net Channel Extensions, per channel extension (Cont'd)

(a) **Protected** Channel Extensions (Cont'd)

(Jurisdiction: Illinois (C)
Indiana, Michigan, North Carolina, Ohio, (C)
South Carolina, and Wisconsin) (C)

(1) 1-year Commitment Period/Term Plan (Cont'd)

Interface Type	Monthly Rate	Nonrecurring Charge
1 Gbps Ethernet (600 Mbps)		
Price Band A	$5,400.00	$1.00
Price Band B	5,400.00	1.00
Price Band C	5,400.00	1.00
N-MSA	5,400.00	1.00
1 Gbps Ethernet (Full Rate)		
Price Band A	7,560.00	1.00
Price Band B	7,560.00	1.00
Price Band C	7,560.00	1.00
N-MSA	7,560.00	1.00
1 Gbps Fibre Channel (Full Rate)		
Price Band A	8,320.00	1.00
Price Band B	8,320.00	1.00
Price Band C	8,320.00	1.00
N-MSA	8,320.00	1.00
1 Gbps FICON (Full Rate)		
Price Band A	8,320.00	1.00
Price Band B	8,320.00	1.00
Price Band C	8,320.00	1.00
N-MSA	8,320.00	1.00

Service availability limited. Refer to # footnote on Page 20-525.

© 2022 Frontier Communications Parent, Inc. All rights reserved

20. Ethernet Private Line (Cont'd)

20.3 Ethernet Private Line # (Cont'd)

(H) Rates and Charges (Cont'd)

(1) On-Net Channel Extensions, per channel extension (Cont'd)

(a) **Protected** Channel Extensions (Cont'd)

(Jurisdiction: Illinois (C)
Indiana, Michigan, North Carolina, Ohio, (C)
South Carolina, and Wisconsin) (C)

(1) 1-year Commitment Period/Term Plan (Cont'd)

Interface Type	Monthly Rate	Nonrecurring Charge
(Mapped to SONET at one end)		
10 Mbps Ethernet (Full Rate) to STS1		
Price Band A	$1,200.00	$1.00
Price Band B	1,200.00	1.00
Price Band C	1,200.00	1.00
N-MSA	1,200.00	1.00
100 Mbps Ethernet (50 Mbps) to STS1		
Price Band A	1,920.00	1.00
Price Band B	1,920.00	1.00
Price Band C	1,920.00	1.00
N-MSA	1,920.00	1.00
100 Mbps Ethernet (Full Rate) to OC3c		
Price Band A	2,630.00	1.00
Price Band B	2,630.00	1.00
Price Band C	2,630.00	1.00
N-MSA	2,630.00	1.00

Service availability limited. Refer to # footnote on Page 20-525.

© 2022 Frontier Communications Parent, Inc. All rights reserved

20. Ethernet Private Line (Cont'd)

20.3 Ethernet Private Line # (Cont'd)

(H) Rates and Charges (Cont'd)

(1) On-Net Channel Extensions, per channel extension (Cont'd)

(a) **Protected** Channel Extensions (Cont'd)

(Jurisdiction: Illinois (C)
Indiana, Michigan, North Carolina, Ohio, (C)
South Carolina, and Wisconsin) (C)

(1) 1-year Commitment Period/Term Plan (Cont'd)

Interface Type	Monthly Rate	Nonrecurring Charge
(Mapped to SONET at one end) (Cont'd)		
1 Gbps Ethernet (50 Mbps) to OC3		
Price Band A	$1,920.00	$1.00
Price Band B	1,920.00	1.00
Price Band C	1,920.00	1.00
N-MSA	1,920.00	1.00
1 Gbps Ethernet (150 Mbps) to OC3		
Price Band A	2,790.00	1.00
Price Band B	2,790.00	1.00
Price Band C	2,790.00	1.00
N-MSA	2,790.00	1.00
1 Gbps Ethernet (300 Mbps) to OC12		
Price Band A	3,660.00	1.00
Price Band B	3,660.00	1.00
Price Band C	3,660.00	1.00
N-MSA	3,660.00	1.00
1 Gbps Ethernet (450 Mbps) to OC12		
Price Band A	4,530.00	1.00
Price Band B	4,530.00	1.00
Price Band C	4,530.00	1.00
N-MSA	4,530.00	1.00

Service availability limited. Refer to # footnote on Page 20-525.

© 2022 Frontier Communications Parent, Inc. All rights reserved

20. Ethernet Private Line (Cont'd)

20.3 Ethernet Private Line # (Cont'd)

(H) Rates and Charges (Cont'd)

(1) On-Net Channel Extensions, per channel extension (Cont'd)

(a) **Protected** Channel Extensions (Cont'd)

(Jurisdiction: Illinois (C)
Indiana, Michigan, North Carolina, Ohio, (C)
South Carolina, and Wisconsin) (C)

(1) 1-year Commitment Period/Term Plan (Cont'd)

Interface Type	Monthly Rate	Nonrecurring Charge
(Mapped to SONET at one end) (Cont'd)		
1 Gbps Ethernet (600 Mbps) to OC12		
Price Band A	$5,400.00	$1.00
Price Band B	5,400.00	1.00
Price Band C	5,400.00	1.00
N-MSA	5,400.00	1.00
1 Gbps Ethernet (600 Mbps) to OC12c		
Price Band A	5,400.00	1.00
Price Band B	5,400.00	1.00
Price Band C	5,400.00	1.00
N-MSA	5,400.00	1.00
1 Gbps Ethernet (Full Rate) to OC48		
Price Band A	7,560.00	1.00
Price Band B	7,560.00	1.00
Price Band C	7,560.00	1.00
N-MSA	7,560.00	1.00
1 Gbps Fiber Channel (Full Rate) to OC48		
Price Band A	8,320.00	1.00
Price Band B	8,320.00	1.00
Price Band C	8,320.00	1.00
N-MSA	8,320.00	1.00
1 Gbps FICON (Full Rate) to OC48		
Price Band A	8,320.00	1.00
Price Band B	8,320.00	1.00
Price Band C	8,320.00	1.00
N-MSA	8,320.00	1.00

Service availability limited. Refer to # footnote on Page 20-525

© 2022 Frontier Communications Parent, Inc. All rights reserved

20. Ethernet Private Line (Cont'd)

20.3 Ethernet Private Line #(Cont'd)

(H) Rates and Charges (Cont'd)

(1) On-Net Channel Extensions, per channel extension (Cont'd)

(a) **Protected** Channel Extensions (Cont'd)

(Jurisdiction: Illinois (C)
Indiana, Michigan, North Carolina, Ohio, (C)
South Carolina, and Wisconsin) (C)

(2) 3-year Commitment Period/Term Plan

Interface Type	Monthly Rate	Nonrecurring Charge
10 Mbps Ethernet (Full Rate)		
Price Band A	$ 900.00	$1.00
Price Band B	900.00	1.00
Price Band C	900.00	1.00
N-MSA	900.00	1.00
100 Mbps Ethernet (50 Mbps)		
Price Band A	1,470.00	1.00
Price Band B	1,470.00	1.00
Price Band C	1,470.00	1.00
N-MSA	1,470.00	1.00
100 Mbps Ethernet (Full Rate)		
Price Band A	2,030.00	1.00
Price Band B	2,030.00	1.00
Price Band C	2,030.00	1.00
N-MSA	2,030.00	1.00

Service availability limited. Refer to # footnote on Page 20-525.

© 2022 Frontier Communications Parent, Inc. All rights reserved

20. Ethernet Private Line (Cont'd)

20.3 Ethernet Private Line #(Cont'd)

(H) Rates and Charges (Cont'd)

(1) On-Net Channel Extensions, per channel extension (Cont'd)

(a) **Protected** Channel Extensions (Cont'd)

(Jurisdiction: Illinois (C)
Indiana, Michigan, North Carolina, Ohio, (C)
South Carolina, and Wisconsin) (C)

(2) 3-year Commitment Period/Term Plan (Cont'd)

Interface Type	Monthly Rate	Nonrecurring Charge
1 Gbps Ethernet (50 Mbps)		
Price Band A	$1,470.00	$1.00
Price Band B	1,470.00	1.00
Price Band C	1,470.00	1.00
N-MSA	1,470.00	1.00
1 Gbps Ethernet (150 Mbps)		
Price Band A	2,310.00	1.00
Price Band B	2,310.00	1.00
Price Band C	2,310.00	1.00
N-MSA	2,310.00	1.00
1 Gbps Ethernet (300 Mbps)		
Price Band A	3,140.00	1.00
Price Band B	3,140.00	1.00
Price Band C	3,140.00	1.00
N-MSA	3,140.00	1.00
1 Gbps Ethernet (450 Mbps)		
Price Band A	3,970.00	1.00
Price Band B	3,970.00	1.00
Price Band C	3,970.00	1.00
N-MSA	3,970.00	1.00

Service availability limited. Refer to # footnote on Page 20-525.

© 2022 Frontier Communications Parent, Inc. All rights reserved

20. Ethernet Private Line (Cont'd)

20.3 Ethernet Private Line #(Cont'd)

(H) Rates and Charges (Cont'd)

(1) On-Net Channel Extensions, per channel extension (Cont'd)

(a) **Protected** Channel Extensions (Cont'd)

(Jurisdiction: Illinois (C)
Indiana, Michigan, North Carolina, Ohio, (C)
South Carolina, and Wisconsin) (C)

(2) 3-year Commitment Period/Term Plan (Cont'd)

Interface Type	Monthly Rate	Nonrecurring Charge
1 Gbps Ethernet (600 Mbps)		
Price Band A	$4,800.00	$1.00
Price Band B	4,800.00	1.00
Price Band C	4,800.00	1.00
N-MSA	4,800.00	1.00
1 Gbps Ethernet (Full Rate)*		
Price Band A	6,720.00	1.00
Price Band B	6,720.00	1.00
Price Band C	6,720.00	1.00
N-MSA	6,720.00	1.00
1 Gbps Fibre Channel (Full Rate)		
Price Band A	7,400.00	1.00
Price Band B	7,400.00	1.00
Price Band C	7,400.00	1.00
N-MSA	7,400.00	1.00
1 Gbps FICON (Full Rate)		
Price Band A	7,400.00	1.00
Price Band B	7,400.00	1.00
Price Band C	7,400.00	1.00
N-MSA	7,400.00	1.00

Service availability limited. Refer to # footnote on Page 20-525.

© 2022 Frontier Communications Parent, Inc. All rights reserved

20. Ethernet Private Line (Cont'd)

20.3 Ethernet Private Line #(Cont'd)

(H) Rates and Charges (Cont'd)

(1) On-Net Channel Extensions, per channel extension (Cont'd)

(a) **Protected** Channel Extensions (Cont'd)

(Jurisdiction: Illinois (C)
Indiana, Michigan, North Carolina, Ohio, (C)
South Carolina, and Wisconsin) (C)

(2) 3-year Commitment Period/Term Plan (Cont'd)

Interface Type	Monthly Rate	Nonrecurring Charge
(Mapped to SONET at one end)		
10 Mbps Ethernet (Full Rate) to STS1		
Price Band A	$ 900.00	$1.00
Price Band B	900.00	1.00
Price Band C	900.00	1.00
N-MSA	900.00	1.00
100 Mbps Ethernet (50 Mbps) to STS1		
Price Band A	1,470.00	1.00
Price Band B	1,470.00	1.00
Price Band C	1,470.00	1.00
N-MSA	1,470.00	1.00
100 Mbps Ethernet (Full Rate) to OC3c		
Price Band A	2,030.00	1.00
Price Band B	2,030.00	1.00
Price Band C	2,030.00	1.00
N-MSA	2,030.00	1.00

Service availability limited. Refer to # footnote on Page 20-525.

© 2022 Frontier Communications Parent, Inc. All rights reserved

20. Ethernet Private Line (Cont'd)

20.3 Ethernet Private Line #(Cont'd)

(H) Rates and Charges (Cont'd)

(1) On-Net Channel Extensions, per channel extension (Cont'd)

(a) **Protected** Channel Extensions (Cont'd)

(Jurisdiction: Illinois (C)
Indiana, Michigan, North Carolina, Ohio, (C)
South Carolina, and Wisconsin) (C)

(2) 3-year Commitment Period/Term Plan (Cont'd)

Interface Type	Monthly Rate	Nonrecurring Charge
(Mapped to SONET at one end) (Cont'd)		
1 Gbps Ethernet (50 Mbps) to OC3		
Price Band A	$1,470.00	$1.00
Price Band B	1,470.00	1.00
Price Band C	1,470.00	1.00
N-MSA	1,470.00	1.00
1 Gbps Ethernet (150 Mbps) to OC3		
Price Band A	2,310.00	1.00
Price Band B	2,310.00	1.00
Price Band C	2,310.00	1.00
N-MSA	2,310.00	1.00
1 Gbps Ethernet (300 Mbps) to OC12		
Price Band A	3,140.00	1.00
Price Band B	3,140.00	1.00
Price Band C	3,140.00	1.00
N-MSA	3,140.00	1.00
1 Gbps Ethernet (450 Mbps) to OC12*		
Price Band A	3,970.00	1.00
Price Band B	3,970.00	1.00
Price Band C	3,970.00	1.00
N-MSA	3,970.00	1.00

Service availability limited. Refer to # footnote on Page 20-525.

© 2022 Frontier Communications Parent, Inc. All rights reserved

20. Ethernet Private Line (Cont'd)

20.3 Ethernet Private Line #(Cont'd)

(H) Rates and Charges (Cont'd)

(1) On-Net Channel Extensions, per channel extension (Cont'd)

(a) **Protected** Channel Extensions (Cont'd)

(Jurisdiction: Illinois (C)
Indiana, Michigan, North Carolina, Ohio, (C)
South Carolina, and Wisconsin) (C)

(2) 3-year Commitment Period/Term Plan (Cont'd)

Interface Type	Monthly Rate	Nonrecurring Charge
(Mapped to SONET at one end) (Cont'd)		
1 Gbps Ethernet (600 Mbps) to OC12		
Price Band A	$4,800.00	$1.00
Price Band B	4,800.00	1.00
Price Band C	4,800.00	1.00
N-MSA	4,800.00	1.00
1 Gbps Ethernet (600 Mbps) to OC12c		
Price Band A	4,800.00	1.00
Price Band B	4,800.00	1.00
Price Band C	4,800.00	1.00
N-MSA	4,800.00	1.00
1 Gbps Ethernet (Full Rate) to OC48		
Price Band A	6,720.00	1.00
Price Band B	6,720.00	1.00
Price Band C	6,720.00	1.00
N-MSA	6,720.00	1.00
1 Gbps Fibre Channel (Full Rate) to OC48*		
Price Band A	7,400.00	1.00
Price Band B	7,400.00	1.00
Price Band C	7,400.00	1.00
N-MSA	7,400.00	1.00
1 Gbps FICON (Full Rate) to OC48		
Price Band A	7,400.00	1.00
Price Band B	7,400.00	1.00
Price Band C	7,400.00	1.00
N-MSA	7,400.00	1.00

Service availability limited. Refer to # footnote on Page 20-525.

© 2022 Frontier Communications Parent, Inc. All rights reserved

20. Ethernet Private Line (Cont'd)

20.3 Ethernet Private Line #(Cont'd)

(H) Rates and Charges (Cont'd)

(1) On-Net Channel Extensions, per channel extension (Cont'd)

(a) **Protected** Channel Extensions (Cont'd)

(Jurisdiction: Illinois (C)
Indiana, Michigan, North Carolina, Ohio, (C)
South Carolina, and Wisconsin) (C)

(3) 5-year Commitment Period/Term Plan

Interface Type	Monthly Rate	Nonrecurring Charge
10 Mbps Ethernet (Full Rate)		
Price Band A	$ 720.00	$1.00
Price Band B	720.00	1.00
Price Band C	720.00	1.00
N-MSA	720.00	1.00
100 Mbps Ethernet (50 Mbps)		
Price Band A	1,200.00	1.00
Price Band B	1,200.00	1.00
Price Band C	1,200.00	1.00
N-MSA	1,200.00	1.00
100 Mbps Ethernet (Full Rate)		
Price Band A	1,680.00	1.00
Price Band B	1,680.00	1.00
Price Band C	1,680.00	1.00
N-MSA	1,680.00	1.00

Service availability limited. Refer to # footnote on Page 20-525.

© 2022 Frontier Communications Parent, Inc. All rights reserved

20. Ethernet Private Line (Cont'd)

20.3 Ethernet Private Line #(Cont'd)

(H) Rates and Charges (Cont'd)

(1) On-Net Channel Extensions, per channel extension (Cont'd)

(a) **Protected** Channel Extensions (Cont'd)

(Jurisdiction: Illinois (C)
Indiana, Michigan, North Carolina, Ohio, (C)
South Carolina, and Wisconsin) (C)

(3) 5-year Commitment Period/Term Plan (Cont'd)

Interface Type	Monthly Rate	Nonrecurring Charge
1 Gbps Ethernet (50 Mbps)		
Price Band A	$1,200.00	$1.00
Price Band B	1,200.00	1.00
Price Band C	1,200.00	1.00
N-MSA	1,200.00	1.00
1 Gbps Ethernet (150 Mbps)		
Price Band A	2,000.00	1.00
Price Band B	2,000.00	1.00
Price Band C	2,000.00	1.00
N-MSA	2,000.00	1.00
1 Gbps Ethernet (300 Mbps)		
Price Band A	2,790.00	1.00
Price Band B	2,790.00	1.00
Price Band C	2,790.00	1.00
N-MSA	2,790.00	1.00
1 Gbps Ethernet (450 Mbps)		
Price Band A	3,590.00	1.00
Price Band B	3,590.00	1.00
Price Band C	3,590.00	1.00
N-MSA	3,590.00	1.00

Service availability limited. Refer to # footnote on Page 20-525.

© 2022 Frontier Communications Parent, Inc. All rights reserved

20. Ethernet Private Line (Cont'd)

20.3 Ethernet Private Line #(Cont'd)

(H) Rates and Charges (Cont'd)

(1) On-Net Channel Extensions, per channel extension (Cont'd)

(a) **Protected** Channel Extensions (Cont'd)

(Jurisdiction: Illinois (C)
Indiana, Michigan, North Carolina, Ohio, (C)
South Carolina, and Wisconsin) (C)

(3) 5-year Commitment Period/Term Plan (Cont'd)

Interface Type	Monthly Rate	Nonrecurring Charge
1 Gbps Ethernet (600 Mbps)		
Price Band A	4,380.00	1.00
Price Band B	4,380.00	1.00
Price Band C	4,380.00	1.00
N-MSA	4,380.00	1.00
1 Gbps Ethernet (Full Rate)		
Price Band A	6,140.00	1.00
Price Band B	6,140.00	1.00
Price Band C	6,140.00	1.00
N-MSA	6,140.00	1.00
1 Gbps Fibre Channel (Full Rate)		
Price Band A	6,760.00	1.00
Price Band B	6,760.00	1.00
Price Band C	6,760.00	1.00
N-MSA	6,760.00	1.00
1 Gbps FICON (Full Rate)		
Price Band A	6,760.00	1.00
Price Band B	6,760.00	1.00
Price Band C	6,760.00	1.00
N-MSA	6,760.00	1.00

Service availability limited. Refer to # footnote on Page 20-525.

© 2022 Frontier Communications Parent, Inc. All rights reserved

20. Ethernet Private Line (Cont'd)

20.3 Ethernet Private Line #(Cont'd)

(H) Rates and Charges (Cont'd)

(1) On-Net Channel Extensions, per channel extension (Cont'd)

(a) **Protected** Channel Extensions (Cont'd)

(Jurisdiction: Illinois (C)
Indiana, Michigan, North Carolina, Ohio, (C)
South Carolina, and Wisconsin) (C)

(3) 5-year Commitment Period/Term Plan (Cont'd)

Interface Type	Monthly Rate	Nonrecurring Charge
(Mapped to SONET at one end)		
10 Mbps Ethernet (Full Rate) to STS1		
Price Band A	$ 720.00	$1.00
Price Band B	720.00	1.00
Price Band C	720.00	1.00
N-MSA	720.00	1.00
100 Mbps Ethernet (50 Mbps) to STS1		
Price Band A	1,200.00	1.00
Price Band B	1,200.00	1.00
Price Band C	1,200.00	1.00
N-MSA	1,200.00	1.00
100 Mbps Ethernet (Full Rate) to OC3c		
Price Band A	1,680.00	1.00
Price Band B	1,680.00	1.00
Price Band C	1,680.00	1.00
N-MSA	1,680.00	1.00

Service availability limited. Refer to # footnote on Page 20-525.

© 2022 Frontier Communications Parent, Inc. All rights reserved

20. Ethernet Private Line (Cont'd)

20.3 Ethernet Private Line #(Cont'd)

(H) Rates and Charges (Cont'd)

(1) On-Net Channel Extensions, per channel extension (Cont'd)

(a) **Protected** Channel Extensions (Cont'd)

(Jurisdiction: Illinois (C)
Indiana, Michigan, North Carolina, Ohio, (C)
South Carolina, and Wisconsin) (C)

(3) 5-year Commitment Period/Term Plan (Cont'd)

Interface Type	Monthly Rate	Nonrecurring Charge
(Mapped to SONET at one end) (Cont'd)		
1 Gbps Ethernet (50 Mbps) to OC3		
Price Band A	$1,200.00	$1.00
Price Band B	1,200.00	1.00
Price Band C	1,200.00	1.00
N-MSA	1,200.00	1.00
1 Gbps Ethernet (150 Mbps) to OC3		
Price Band A	2,000.00	1.00
Price Band B	2,000.00	1.00
Price Band C	2,000.00	1.00
N-MSA	2,000.00	1.00
1 Gbps Ethernet (300 Mbps) to OC12		
Price Band A	2,790.00	1.00
Price Band B	2,790.00	1.00
Price Band C	2,790.00	1.00
N-MSA	2,790.00	1.00
1 Gbps Ethernet (450 Mbps) to OC12		
Price Band A	3,590.00	1.00
Price Band B	3,590.00	1.00
Price Band C	3,590.00	1.00
N-MSA	3,590.00	1.00

Service availability limited. Refer to # footnote on Page 20-525.

© 2022 Frontier Communications Parent, Inc. All rights reserved

20. Ethernet Private Line (Cont'd)

20.3 Ethernet Private Line #(Cont'd)

(H) Rates and Charges (Cont'd)

(1) On-Net Channel Extensions, per channel extension (Cont'd)

(a) **Protected** Channel Extensions (Cont'd)

(Jurisdiction: Illinois (C)
Indiana, Michigan, North Carolina, Ohio, (C)
South Carolina, and Wisconsin) (C)

(3) 5-year Commitment Period/Term Plan (Cont'd)

Interface Type	Monthly Rate	Nonrecurring Charge
(Mapped to SONET at one end) (Cont'd)		
1 Gbps Ethernet (600 Mbps) to OC12		
Price Band A	$4,380.00	$1.00
Price Band B	4,380.00	1.00
Price Band C	4,380.00	1.00
N-MSA	4,380.00	1.00
1 Gbps Ethernet (600 Mbps) to OC12c		
Price Band A	4,380.00	1.00
Price Band B	4,380.00	1.00
Price Band C	4,380.00	1.00
N-MSA	4,380.00	1.00
1 Gbps Ethernet (Full Rate) to OC48		
Price Band A	6,140.00	1.00
Price Band B	6,140.00	1.00
Price Band C	6,140.00	1.00
N-MSA	6,140.00	1.00
1 Gbps Fibre Channel (Full Rate) to OC48		
Price Band A	6,760.00	1.00
Price Band B	6,760.00	1.00
Price Band C	6,760.00	1.00
N-MSA	6,760.00	1.00
1 Gbps FICON (Full Rate) to OC48		
Price Band A	6,760.00	1.00
Price Band B	6,760.00	1.00
Price Band C	6,760.00	1.00
N-MSA	6,760.00	1.00

Service availability limited. Refer to # footnote on Page 20-525.

© 2022 Frontier Communications Parent, Inc. All rights reserved

20. Ethernet Private Line (Cont'd)

20.3 Ethernet Private Line #(Cont'd)

(H) Rates and Charges (Cont'd)

(1) On-Net Channel Extensions, per channel extension (Cont'd)

(a) **Protected** Channel Extensions (Cont'd)

(Jurisdiction: Illinois (C)
Indiana, Michigan, North Carolina, Ohio, (C)
South Carolina, and Wisconsin) (C)

(4) 7-year Commitment Period/Term Plan

Interface Type	Monthly Rate	Nonrecurring Charge
10 Mbps Ethernet (Full Rate)		
Price Band A	$ 600.00	$1.00
Price Band B	600.00	1.00
Price Band C	600.00	1.00
N-MSA	600.00	1.00
100 Mbps Ethernet (50 Mbps)		
Price Band A	1,020.00	1.00
Price Band B	1,020.00	1.00
Price Band C	1,020.00	1.00
N-MSA	1,020.00	1.00
100 Mbps Ethernet (Full Rate)		
Price Band A	1,430.00	1.00
Price Band B	1,430.00	1.00
Price Band C	1,430.00	1.00
N-MSA	1,430.00	1.00

Service availability limited. Refer to # footnote on Page 20-525.

© 2022 Frontier Communications Parent, Inc. All rights reserved

20. Ethernet Private Line (Cont'd)

20.3 Ethernet Private Line #(Cont'd)

(H) Rates and Charges (Cont'd)

(1) On-Net Channel Extensions, per channel extension (Cont'd)

(a) **Protected** Channel Extensions (Cont'd)

(Jurisdiction: Illinois (C)
Indiana, Michigan, North Carolina, Ohio, (C)
South Carolina, and Wisconsin) (C)

(4) 7-year Commitment Period/Term Plan (Cont'd)

Interface Type	Monthly Rate	Nonrecurring Charge
1 Gbps Ethernet (50 Mbps)*		
Price Band A	$1,020.00	$1.00
Price Band B	1,020.00	1.00
Price Band C	1,020.00	1.00
N-MSA	1,020.00	1.00
1 Gbps Ethernet (150 Mbps)*		
Price Band A	1,840.00	1.00
Price Band B	1,840.00	1.00
Price Band C	1,840.00	1.00
N-MSA	1,840.00	1.00
1 Gbps Ethernet (300 Mbps)*		
Price Band A	2,660.00	1.00
Price Band B	2,660.00	1.00
Price Band C	2,660.00	1.00
N-MSA	2,660.00	1.00
1 Gbps Ethernet (450 Mbps)*		
Price Band A	3,480.00	1.00
Price Band B	3,480.00	1.00
Price Band C	3,480.00	1.00
N-MSA	3,480.00	1.00

Service availability limited. Refer to # footnote on Page 20-525.

© 2022 Frontier Communications Parent, Inc. All rights reserved

20. Ethernet Private Line (Cont'd)

20.3 Ethernet Private Line #(Cont'd)

(H) Rates and Charges (Cont'd)

(1) On-Net Channel Extensions, per channel extension (Cont'd)

(a) **Protected** Channel Extensions (Cont'd)

(Jurisdiction: Illinois (C)
Indiana, Michigan, North Carolina, Ohio, (C)
South Carolina, and Wisconsin) (C)

(4) 7-year Commitment Period/Term Plan (Cont'd)

Interface Type	Monthly Rate	Nonrecurring Charge
1 Gbps Ethernet (600 Mbps)		
Price Band A	$4,300.00	$1.00
Price Band B	4,300.00	1.00
Price Band C	4,300.00	1.00
N-MSA	4,300.00	1.00
1 Gbps Ethernet (Full Rate)*		
Price Band A	6,020.00	1.00
Price Band B	6,020.00	1.00
Price Band C	6,020.00	1.00
N-MSA	6,020.00	1.00
1 Gbps Fibre Channel (Full Rate)*		
Price Band A	6,630.00	1.00
Price Band B	6,630.00	1.00
Price Band C	6,630.00	1.00
N-MSA	6,630.00	1.00
1 Gbps FICON (Full Rate)*		
Price Band A	6,630.00	1.00
Price Band B	6,630.00	1.00
Price Band C	6,630.00	1.00
N-MSA	6,630.00	1.00

Service availability limited. Refer to # footnote on Page 20-525.

© 2022 Frontier Communications Parent, Inc. All rights reserved

20. Ethernet Private Line (Cont'd)

20.3 Ethernet Private Line #(Cont'd)

(H) Rates and Charges (Cont'd)

(1) On-Net Channel Extensions, per channel extension (Cont'd)

(a) **Protected** Channel Extensions (Cont'd)

(Jurisdiction: Illinois (C)
Indiana, Michigan, North Carolina, Ohio, (C)
South Carolina, and Wisconsin) (C)

(4) 7-year Commitment Period/Term Plan (Cont'd)

Interface Type	Monthly Rate	Nonrecurring Charge
(Mapped to SONET at one end)		
10 Mbps Ethernet (Full Rate) to STS1		
Price Band A	$ 600.00	$1.00
Price Band B	600.00	1.00
Price Band C	600.00	1.00
N-MSA	600.00	1.00
100 Mbps Ethernet (50 Mbps) to STS1*		
Price Band A	1,020.00	1.00
Price Band B	1,020.00	1.00
Price Band C	1,020.00	1.00
N-MSA	1,020.00	1.00
100 Mbps Ethernet (Full Rate) to OC3c		
Price Band A	1,430.00	1.00
Price Band B	1,430.00	1.00
Price Band C	1,430.00	1.00
N-MSA	1,430.00	1.00

Service availability limited. Refer to # footnote on Page 20-525.

© 2022 Frontier Communications Parent, Inc. All rights reserved

20. Ethernet Private Line (Cont'd)

20.3 Ethernet Private Line #(Cont'd)

(H) Rates and Charges (Cont'd)

(1) On-Net Channel Extensions, per channel extension (Cont'd)

(a) **Protected** Channel Extensions (Cont'd)

(Jurisdiction: Illinois (C)
Indiana, Michigan, North Carolina, Ohio, (C)
South Carolina, and Wisconsin) (C)

(4) 7-year Commitment Period/Term Plan (Cont'd)

Interface Type	Monthly Rate	Nonrecurring Charge
(Mapped to SONET at one end) (Cont'd)		
1 Gbps Ethernet (50 Mbps) to OC3*		
Price Band A	$1,020.00	$1.00
Price Band B	1,020.00	1.00
Price Band C	1,020.00	1.00
N-MSA	1,020.00	1.00
1 Gbps Ethernet (150 Mbps) to OC3*		
Price Band A	1,840.00	1.00
Price Band B	1,840.00	1.00
Price Band C	1,840.00	1.00
N-MSA	1,840.00	1.00
1 Gbps Ethernet (300 Mbps) to OC12*		
Price Band A	2,660.00	1.00
Price Band B	2,660.00	1.00
Price Band C	2,660.00	1.00
N-MSA	2,660.00	1.00
1 Gbps Ethernet (450 Mbps) to OC12*		
Price Band A	3,480.00	1.00
Price Band B	3,480.00	1.00
Price Band C	3,480.00	1.00
N-MSA	3,480.00	1.00

Service availability limited. Refer to # footnote on Page 20-525.

© 2022 Frontier Communications Parent, Inc. All rights reserved

20. Ethernet Private Line (Cont'd)

20.3 Ethernet Private Line #(Cont'd)

(H) Rates and Charges (Cont'd)

(1) On-Net Channel Extensions, per channel extension (Cont'd)

(a) **Protected** Channel Extensions (Cont'd)

(Jurisdiction: Illinois (C)
Indiana, Michigan, North Carolina, Ohio, (C)
South Carolina, and Wisconsin) (C)

(4) 7-year Commitment Period/Term Plan (Cont'd)

Interface Type	Monthly Rate	Nonrecurring Charge
(Mapped to SONET at one end) (Cont'd)		
1 Gbps Ethernet (600 Mbps) to OC12*		
Price Band A	4,300.00	1.00
Price Band B	4,300.00	1.00
Price Band C	4,300.00	1.00
N-MSA	4,300.00	1.00
1 Gbps Ethernet (600 Mbps) to OC12c		
Price Band A	4,300.00	1.00
Price Band B	4,300.00	1.00
Price Band C	4,300.00	1.00
N-MSA	4,300.00	1.00
1 Gbps Ethernet (Full Rate) to OC48*		
Price Band A	6,020.00	1.00
Price Band B	6,020.00	1.00
Price Band C	6,020.00	1.00
N-MSA	6,020.00	1.00
1 Gbps Fibre Channel (Full Rate) to OC48*		
Price Band A	6,630.00	1.00
Price Band B	6,630.00	1.00
Price Band C	6,630.00	1.00
N-MSA	6,630.00	1.00
1 Gbps FICON (Full Rate) to OC48*		
Price Band A	6,630.00	1.00
Price Band B	6,630.00	1.00
Price Band C	6,630.00	1.00
N-MSA	6,630.00	1.00

Service availability limited. Refer to # footnote on Page 20-525.

© 2022 Frontier Communications Parent, Inc. All rights reserved

20. Ethernet Private Line (Cont'd)

20.3 Ethernet Private Line #(Cont'd)

(H) Rates and Charges (Cont'd)

(1) On-Net Channel Extensions, per channel extension (Cont'd)

(b) **Unprotected** Channel Extensions

(Jurisdiction: Illinois (C)
Indiana, Michigan, North Carolina, Ohio, (C)
South Carolina, and Wisconsin) (C)

(1) 1-year Commitment Period/Term Plan

Interface Type	Monthly Rate	Nonrecurring Charge
10 Mbps Ethernet (Full Rate)		
Price Band A	$ 900.00	$1.00
Price Band B	900.00	1.00
Price Band C	900.00	1.00
N-MSA	900.00	1.00
100 Mbps Ethernet (50 Mbps)*		
Price Band A	1,470.00	1.00
Price Band B	1,470.00	1.00
Price Band C	1,470.00	1.00
N-MSA	1,470.00	1.00
100 Mbps Ethernet (Full Rate)		
Price Band A	2,030.00	1.00
Price Band B	2,030.00	1.00
Price Band C	2,030.00	1.00
N-MSA	2,030.00	1.00

Service availability limited. Refer to # footnote on Page 20-525.

© 2022 Frontier Communications Parent, Inc. All rights reserved

20. Ethernet Private Line (Cont'd)

20.3 Ethernet Private Line #(Cont'd)

(H) Rates and Charges (Cont'd)

(1) On-Net Channel Extensions, per channel extension (Cont'd)

(b) **Unprotected** Channel Extensions (Cont'd)

(Jurisdiction: Illinois (C)
Indiana, Michigan, North Carolina, Ohio, (C)
South Carolina, and Wisconsin) (C)

(1) 1-year Commitment Period/Term Plan (Cont'd)

Interface Type	Monthly Rate	Nonrecurring Charge
1 Gbps Ethernet (50 Mbps)*		
Price Band A	$1,470.00	$1.00
Price Band B	1,470.00	1.00
Price Band C	1,470.00	1.00
N-MSA	1,470.00	1.00
1 Gbps Ethernet (150 Mbps)*		
Price Band A	2,160.00	1.00
Price Band B	2,160.00	1.00
Price Band C	2,160.00	1.00
N-MSA	2,160.00	1.00
1 Gbps Ethernet (300 Mbps)*		
Price Band A	2,840.00	1.00
Price Band B	2,840.00	1.00
Price Band C	2,840.00	1.00
N-MSA	2,840.00	1.00
1 Gbps Ethernet (450 Mbps)*		
Price Band A	3,520.00	1.00
Price Band B	3,520.00	1.00
Price Band C	3,520.00	1.00
N-MSA	3,520.00	1.00

Service availability limited. Refer to # footnote on Page 20-525.

© 2022 Frontier Communications Parent, Inc. All rights reserved

20. Ethernet Private Line (Cont'd)

20.3 Ethernet Private Line # (Cont'd)

(H) Rates and Charges (Cont'd)

(1) On-Net Channel Extensions, per channel extension (Cont'd)

(b) **Unprotected** Channel Extensions (Cont'd)

(Jurisdiction: Illinois (C)
Indiana, Michigan, North Carolina, Ohio, (C)
South Carolina, and Wisconsin) (C)

(1) 1-year Commitment Period/Term Plan (Cont'd)

Interface Type	Monthly Rate	Nonrecurring Charge
1 Gbps Ethernet (600 Mbps)		
Price Band A	$4,200.00	$1.00
Price Band B	4,200.00	1.00
Price Band C	4,200.00	1.00
N-MSA	4,200.00	1.00
1 Gbps Ethernet (Full Rate)*		
Price Band A	5,880.00	1.00
Price Band B	5,880.00	1.00
Price Band C	5,880.00	1.00
N-MSA	5,880.00	1.00
1 Gbps Fibre Channel (Full Rate)*		
Price Band A	6,470.00	1.00
Price Band B	6,470.00	1.00
Price Band C	6,470.00	1.00
N-MSA	6,470.00	1.00
1 Gbps FICON (Full Rate)*		
Price Band A	6,470.00	1.00
Price Band B	6,470.00	1.00
Price Band C	6,470.00	1.00
N-MSA	6,470.00	1.00

Service availability limited. Refer to # footnote on Page 20-525.

© 2022 Frontier Communications Parent, Inc. All rights reserved

20. Ethernet Private Line (Cont'd)

20.3 Ethernet Private Line #(Cont'd)

(H) Rates and Charges (Cont'd)

(1) On-Net Channel Extensions, per channel extension (Cont'd)

(b) **Unprotected** Channel Extensions (Cont'd)

(Jurisdiction: Illinois (C)
Indiana, Michigan, North Carolina, Ohio, (C)
South Carolina, and Wisconsin) (C)

(1) 1-year Commitment Period/Term Plan (Cont'd)

Interface Type	Monthly Rate	Nonrecurring Charge
(Mapped to SONET at one end)		
10 Mbps Ethernet (Full Rate) to STS1		
Price Band A	$ 900.00	$1.00
Price Band B	900.00	1.00
Price Band C	900.00	1.00
N-MSA	900.00	1.00
100 Mbps Ethernet (50 Mbps) to STS1*		
Price Band A	1,470.00	1.00
Price Band B	1,470.00	1.00
Price Band C	1,470.00	1.00
N-MSA	1,470.00	1.00
100 Mbps Ethernet (Full Rate) to OC3c		
Price Band A	2,030.00	1.00
Price Band B	2,030.00	1.00
Price Band C	2,030.00	1.00
N-MSA	2,030.00	1.00

Service availability limited. Refer to # footnote on Page 20-525.

© 2022 Frontier Communications Parent, Inc. All rights reserved

20. Ethernet Private Line (Cont'd)

20.3 Ethernet Private Line #(Cont'd)

(H) Rates and Charges (Cont'd)

(1) On-Net Channel Extensions, per channel extension (Cont'd)

(b) **Unprotected** Channel Extensions (Cont'd)

(Jurisdiction: Illinois (C)
Indiana, Michigan, North Carolina, Ohio, (C)
South Carolina, and Wisconsin) (C)

(1) 1-year Commitment Period/Term Plan (Cont'd)

Interface Type	Monthly Rate	Nonrecurring Charge
(Mapped to SONET at one end) (Cont'd)		
1 Gbps Ethernet (50 Mbps) to OC3*		
Price Band A	$1,470.00	$1.00
Price Band B	1,470.00	1.00
Price Band C	1,470.00	1.00
N-MSA	1,470.00	1.00
1 Gbps Ethernet (150 Mbps) to OC3*		
Price Band A	2,160.00	1.00
Price Band B	2,160.00	1.00
Price Band C	2,160.00	1.00
N-MSA	2,160.00	1.00
1 Gbps Ethernet (300 Mbps) to OC12*		
Price Band A	2,840.00	1.00
Price Band B	2,840.00	1.00
Price Band C	2,840.00	1.00
N-MSA	2,840.00	1.00
1 Gbps Ethernet (450 Mbps) to OC12*		
Price Band A	3,520.00	1.00
Price Band B	3,520.00	1.00
Price Band C	3,520.00	1.00
N-MSA	3,520.00	1.00

Service availability limited. Refer to # footnote on Page 20-525.

© 2022 Frontier Communications Parent, Inc. All rights reserved

20. Ethernet Private Line (Cont'd)

20.3 Ethernet Private Line #(Cont'd)

(H) Rates and Charges (Cont'd)

(1) On-Net Channel Extensions, per channel extension (Cont'd)

(b) **Unprotected** Channel Extensions (Cont'd)

(Jurisdiction: Illinois (C)
Indiana, Michigan, North Carolina, Ohio, (C)
South Carolina, and Wisconsin) (C)

(1) 1-year Commitment Period/Term Plan (Cont'd)

Interface Type	Monthly Rate	Nonrecurring Charge
(Mapped to SONET at one end) (Cont'd)		
1 Gbps Ethernet (600 Mbps) to OC12*		
Price Band A	4,200.00	1.00
Price Band B	4,200.00	1.00
Price Band C	4,200.00	1.00
N-MSA	4,200.00	1.00
1 Gbps Ethernet (600 Mbps) to OC12c		
Price Band A	4,200.00	1.00
Price Band B	4,200.00	1.00
Price Band C	4,200.00	1.00
N-MSA	4,200.00	1.00
1 Gbps Ethernet (Full Rate) to OC48*		
Price Band A	5,880.00	1.00
Price Band B	5,880.00	1.00
Price Band C	5,880.00	1.00
N-MSA	5,880.00	1.00
1 Gbps Fibre Channel (Full Rate) to OC48*		
Price Band A	6,470.00	1.00
Price Band B	6,470.00	1.00
Price Band C	6,470.00	1.00
N-MSA	6,470.00	1.00
1 Gbps FICON (Full Rate) to OC48*		
Price Band A	6,470.00	1.00
Price Band B	6,470.00	1.00
Price Band C	6,470.00	1.00
N-MSA	6,470.00	1.00

Service availability limited. Refer to # footnote on Page 20-525.

© 2022 Frontier Communications Parent, Inc. All rights reserved

20. Ethernet Private Line (Cont'd)

20.3 Ethernet Private Line #(Cont'd)

(H) Rates and Charges (Cont'd)

(1) On-Net Channel Extensions, per channel extension (Cont'd)

(b) **Unprotected** Channel Extensions (Cont'd)

(Jurisdiction: Illinois (C)
Indiana, Michigan, North Carolina, Ohio, (C)
South Carolina, and Wisconsin) (C)

(2) 3-year Commitment Period/Term Plan

Interface Type	Monthly Rate	Nonrecurring Charge
10 Mbps Ethernet (Full Rate)		
Price Band A	$ 740.00	$1.00
Price Band B	740.00	1.00
Price Band C	740.00	1.00
N-MSA	740.00	1.00
100 Mbps Ethernet (50 Mbps)		
Price Band A	1,180.00	1.00
Price Band B	1,180.00	1.00
Price Band C	1,180.00	1.00
N-MSA	1,180.00	1.00
100 Mbps Ethernet (Full Rate)		
Price Band A	1,620.00	1.00
Price Band B	1,620.00	1.00
Price Band C	1,620.00	1.00
N-MSA	1,620.00	1.00

Service availability limited. Refer to # footnote on Page 20-525.

© 2022 Frontier Communications Parent, Inc. All rights reserved

20. Ethernet Private Line (Cont'd)

20.3 Ethernet Private Line #(Cont'd)

(H) Rates and Charges (Cont'd)

(1) On-Net Channel Extensions, per channel extension (Cont'd)

(b) **Unprotected** Channel Extensions (Cont'd)

(Jurisdiction: Illinois (C)
Indiana, Michigan, North Carolina, Ohio, (C)
South Carolina, and Wisconsin) (C)

(1) 3-year Commitment Period/Term Plan (Cont'd)

Interface Type	Monthly Rate	Nonrecurring Charge
1 Gbps Ethernet (50 Mbps)		
Price Band A	$1,180.00	$1.00
Price Band B	1,180.00	1.00
Price Band C	1,180.00	1.00
N-MSA	1,180.00	1.00
1 Gbps Ethernet (150 Mbps)		
Price Band A	1,840.00	1.00
Price Band B	1,840.00	1.00
Price Band C	1,840.00	1.00
N-MSA	1,840.00	1.00
1 Gbps Ethernet (300 Mbps)		
Price Band A	2,490.00	1.00
Price Band B	2,490.00	1.00
Price Band C	2,490.00	1.00
N-MSA	2,490.00	1.00
1 Gbps Ethernet (450 Mbps)		
Price Band A	3,150.00	1.00
Price Band B	3,150.00	1.00
Price Band C	3,150.00	1.00
N-MSA	3,150.00	1.00

Service availability limited. Refer to # footnote on Page 20-525.

© 2022 Frontier Communications Parent, Inc. All rights reserved

20. Ethernet Private Line (Cont'd)

20.3 Ethernet Private Line #(Cont'd)

(H) Rates and Charges (Cont'd)

(1) On-Net Channel Extensions, per channel extension (Cont'd)

(b) **Unprotected** Channel Extensions (Cont'd)

(Jurisdiction: Illinois (C)
Indiana, Michigan, North Carolina, Ohio, (C)
South Carolina, and Wisconsin) (C)

(1) 3-year Commitment Period/Term Plan (Cont'd)

Interface Type	Monthly Rate	Nonrecurring Charge
1 Gbps Ethernet (600 Mbps)		
Price Band A	3,800.00	1.00
Price Band B	3,800.00	1.00
Price Band C	3,800.00	1.00
N-MSA	3,800.00	1.00
1 Gbps Ethernet (Full Rate)		
Price Band A	5,320.00	1.00
Price Band B	5,320.00	1.00
Price Band C	5,320.00	1.00
N-MSA	5,320.00	1.00
1 Gbps Fibre Channel (Full Rate)		
Price Band A	5,860.00	1.00
Price Band B	5,860.00	1.00
Price Band C	5,860.00	1.00
N-MSA	5,860.00	1.00
1 Gbps FICON (Full Rate)		
Price Band A	5,860.00	1.00
Price Band B	5,860.00	1.00
Price Band C	5,860.00	1.00
N-MSA	5,860.00	1.00

Service availability limited. Refer to # footnote on Page 20-525.

© 2022 Frontier Communications Parent, Inc. All rights reserved

20. Ethernet Private Line (Cont'd)

20.3 Ethernet Private Line #(Cont'd)

(H) Rates and Charges (Cont'd)

(1) On-Net Channel Extensions, per channel extension (Cont'd)

(b) **Unprotected** Channel Extensions (Cont'd)

(Jurisdiction: Illinois (C)
Indiana, Michigan, North Carolina, Ohio, (C)
South Carolina, and Wisconsin) (C)

(2) 3-year Commitment Period/Term Plan (Cont'd)

Interface Type	Monthly Rate	Nonrecurring Charge
(Mapped to SONET at one end)		
10 Mbps Ethernet (Full Rate) to STS1		
Price Band A	$ 740.00	$1.00
Price Band B	740.00	1.00
Price Band C	740.00	1.00
N-MSA	740.00	1.00
100 Mbps Ethernet (50 Mbps) to STS1		
Price Band A	1,180.00	1.00
Price Band B	1,180.00	1.00
Price Band C	1,180.00	1.00
N-MSA	1,180.00	1.00
100 Mbps Ethernet (Full Rate) to OC3c		
Price Band A	1,620.00	1.00
Price Band B	1,620.00	1.00
Price Band C	1,620.00	1.00
N-MSA	1,620.00	1.00

Service availability limited. Refer to # footnote on Page 20-525.

© 2022 Frontier Communications Parent, Inc. All rights reserved

20. Ethernet Private Line (Cont'd)

20.3 Ethernet Private Line #(Cont'd)

(H) Rates and Charges (Cont'd)

(1) On-Net Channel Extensions, per channel extension (Cont'd)

(b) **Unprotected** Channel Extensions (Cont'd)

(Jurisdiction: Illinois (C)
Indiana, Michigan, North Carolina, Ohio, (C)
South Carolina, and Wisconsin) (C)

(2) 3-year Commitment Period/Term Plan (Cont'd)

Interface Type	Monthly Rate	Nonrecurring Charge
(Mapped to SONET at one end) (Cont'd)		
1 Gbps Ethernet (50 Mbps) to OC3		
Price Band A	$1,180.00	$1.00
Price Band B	1,180.00	1.00
Price Band C	1,180.00	1.00
N-MSA	1,180.00	1.00
1 Gbps Ethernet (150 Mbps) to OC3		
Price Band A	1,840.00	1.00
Price Band B	1,840.00	1.00
Price Band C	1,840.00	1.00
N-MSA	1,840.00	1.00
1 Gbps Ethernet (300 Mbps) to OC12		
Price Band A	2,490.00	1.00
Price Band B	2,490.00	1.00
Price Band C	2,490.00	1.00
N-MSA	2,490.00	1.00
1 Gbps Ethernet (450 Mbps) to OC12		
Price Band A	3,150.00	1.00
Price Band B	3,150.00	1.00
Price Band C	3,150.00	1.00
N-MSA	3,150.00	1.00

Service availability limited. Refer to # footnote on Page 20-525.

© 2022 Frontier Communications Parent, Inc. All rights reserved

20. Ethernet Private Line (Cont'd)

20.3 Ethernet Private Line #(Cont'd)

(H) Rates and Charges (Cont'd)

(1) On-Net Channel Extensions, per channel extension (Cont'd)

(b) **Unprotected** Channel Extensions (Cont'd)

(Jurisdiction: Illinois (C)
Indiana, Michigan, North Carolina, Ohio, (C)
South Carolina, and Wisconsin) (C)

(2) 3-year Commitment Period/Term Plan (Cont'd)

Interface Type	Monthly Rate	Nonrecurring Charge
(Mapped to SONET at one end) (Cont'd)		
1 Gbps Ethernet (600 Mbps) to OC12		
Price Band A	$3,800.00	$1.00
Price Band B	3,800.00	1.00
Price Band C	3,800.00	1.00
N-MSA	3,800.00	1.00
1 Gbps Ethernet (600 Mbps) to OC12c		
Price Band A	3,800.00	1.00
Price Band B	3,800.00	1.00
Price Band C	3,800.00	1.00
N-MSA	3,800.00	1.00
1 Gbps Ethernet (Full Rate) to OC48		
Price Band A	5,320.00	1.00
Price Band B	5,320.00	1.00
Price Band C	5,320.00	1.00
N-MSA	5,320.00	1.00
1 Gbps Fibre Channel (Full Rate) to OC48		
Price Band A	5,860.00	1.00
Price Band B	5,860.00	1.00
Price Band C	5,860.00	1.00
N-MSA	5,860.00	1.00
1 Gbps FICON (Full Rate) to OC48		
Price Band A	5,860.00	1.00
Price Band B	5,860.00	1.00
Price Band C	5,860.00	1.00
N-MSA	5,860.00	1.00

Service availability limited. Refer to # footnote on Page 20-525.

© 2022 Frontier Communications Parent, Inc. All rights reserved

20. Ethernet Private Line (Cont'd)

20.3 Ethernet Private Line #(Cont'd)

(H) Rates and Charges (Cont'd)

(1) On-Net Channel Extensions, per channel extension (Cont'd)

(b) **Unprotected** Channel Extensions

(Jurisdiction: Illinois (C)
Indiana, Michigan, North Carolina, Ohio, (C)
South Carolina, and Wisconsin) (C)

(3) 5-year Commitment Period/Term Plan

Interface Type	Monthly Rate	Nonrecurring Charge
10 Mbps Ethernet (Full Rate)		
Price Band A	$ 590.00	$1.00
Price Band B	590.00	1.00
Price Band C	590.00	1.00
N-MSA	590.00	1.00
100 Mbps Ethernet (50 Mbps)		
Price Band A	960.00	1.00
Price Band B	960.00	1.00
Price Band C	960.00	1.00
N-MSA	960.00	1.00
100 Mbps Ethernet (Full Rate)		
Price Band A	1,320.00	1.00
Price Band B	1,320.00	1.00
Price Band C	1,320.00	1.00
N-MSA	1,320.00	1.00

Service availability limited. Refer to # footnote on Page 20-525.

© 2022 Frontier Communications Parent, Inc. All rights reserved

20. Ethernet Private Line (Cont'd)

20.3 Ethernet Private Line #(Cont'd)

(H) Rates and Charges (Cont'd)

(1) On-Net Channel Extensions, per channel extension (Cont'd)

(b) **Unprotected** Channel Extensions (Cont'd)

(Jurisdiction: Illinois (C)
Indiana, Michigan, North Carolina, Ohio, (C)
South Carolina, and Wisconsin) (C)

(3) 5-year Commitment Period/Term Plan (Cont'd)

Interface Type	Monthly Rate	Nonrecurring Charge
1 Gbps Ethernet (50 Mbps)		
Price Band A	$ 960.00	$1.00
Price Band B	960.00	1.00
Price Band C	960.00	1.00
N-MSA	960.00	1.00
1 Gbps Ethernet (150 Mbps)		
Price Band A	1,600.00	1.00
Price Band B	1,600.00	1.00
Price Band C	1,600.00	1.00
N-MSA	1,600.00	1.00
1 Gbps Ethernet (300 Mbps)		
Price Band A	2,230.00	1.00
Price Band B	2,230.00	1.00
Price Band C	2,230.00	1.00
N-MSA	2,230.00	1.00
1 Gbps Ethernet (450 Mbps)		
Price Band A	2,860.00	1.00
Price Band B	2,860.00	1.00
Price Band C	2,860.00	1.00
N-MSA	2,860.00	1.00

Service availability limited. Refer to # footnote on Page 20-525.

© 2022 Frontier Communications Parent, Inc. All rights reserved

20. Ethernet Private Line (Cont'd)

20.3 Ethernet Private Line #(Cont'd)

(H) Rates and Charges (Cont'd)

(1) On-Net Channel Extensions, per channel extension (Cont'd)

(b) **Unprotected** Channel Extensions (Cont'd)

(Jurisdiction: Illinois (C)
Indiana, Michigan, North Carolina, Ohio, (C)
South Carolina, and Wisconsin) (C)

(3) 5-year Commitment Period/Term Plan (Cont'd)

Interface Type	Monthly Rate	Nonrecurring Charge
1 Gbps Ethernet (600 Mbps)		
Price Band A	$3,490.00	$1.00
Price Band B	3,490.00	1.00
Price Band C	3,490.00	1.00
N-MSA	3,490.00	1.00
1 Gbps Ethernet (Full Rate)		
Price Band A	4,890.00	1.00
Price Band B	4,890.00	1.00
Price Band C	4,890.00	1.00
N-MSA	4,890.00	1.00
1 Gbps Fibre Channel (Full Rate)		
Price Band A	5,380.00	1.00
Price Band B	5,380.00	1.00
Price Band C	5,380.00	1.00
N-MSA	5,380.00	1.00
1 Gbps FICON (Full Rate)		
Price Band A	5,380.00	1.00
Price Band B	5,380.00	1.00
Price Band C	5,380.00	1.00
N-MSA	5,380.00	1.00

Service availability limited. Refer to # footnote on Page 20-525.

© 2022 Frontier Communications Parent, Inc. All rights reserved

20. Ethernet Private Line (Cont'd)

20.3 Ethernet Private Line #(Cont'd)

(H) Rates and Charges (Cont'd)

(1) On-Net Channel Extensions, per channel extension (Cont'd)

(b) **Unprotected** Channel Extensions (Cont'd)

(Jurisdiction: Illinois (C)
Indiana, Michigan, North Carolina, Ohio, (C)
South Carolina, and Wisconsin) (C)

(3) 5-year Commitment Period/Term Plan (Cont'd)

Interface Type	Monthly	Nonrecurring Charge Rate
(Mapped to SONET at one end)		
10 Mbps Ethernet (Full Rate) to STS1		
Price Band A	$ 590.00	$1.00
Price Band B	590.00	1.00
Price Band C	590.00	1.00
N-MSA	590.00	1.00
100 Mbps Ethernet (50 Mbps) to STS1		
Price Band A	960.00	1.00
Price Band B	960.00	1.00
Price Band C	960.00	1.00
N-MSA	960.00	1.00
100 Mbps Ethernet (Full Rate) to OC3c		
Price Band A	1,320.00	1.00
Price Band B	1,320.00	1.00
Price Band C	1,320.00	1.00
N-MSA	1,320.00	1.00

Service availability limited. Refer to # footnote on Page 20-525.

© 2022 Frontier Communications Parent, Inc. All rights reserved

20. Ethernet Private Line (Cont'd)

20.3 Ethernet Private Line #(Cont'd)

(H) Rates and Charges (Cont'd)

(1) On-Net Channel Extensions, per channel extension (Cont'd)

(b) **Unprotected** Channel Extensions (Cont'd)

(Jurisdiction: Illinois (C)
Indiana, Michigan, North Carolina, Ohio, (C)
South Carolina, and Wisconsin) (C)

(3) 5-year Commitment Period/Term Plan (Cont'd)

Interface Type	Monthly Rate	Nonrecurring Charge
(Mapped to SONET at one end) (Cont'd)		
1 Gbps Ethernet (50 Mbps) to OC3		
Price Band A	$ 960.00	$1.00
Price Band B	960.00	1.00
Price Band C	960.00	1.00
N-MSA	960.00	1.00
1 Gbps Ethernet (150 Mbps) to OC3		
Price Band A	1,600.00	1.00
Price Band B	1,600.00	1.00
Price Band C	1,600.00	1.00
N-MSA	1,600.00	1.00
1 Gbps Ethernet (300 Mbps) to OC12		
Price Band A	2,230.00	1.00
Price Band B	2,230.00	1.00
Price Band C	2,230.00	1.00
N-MSA	2,230.00	1.00
1 Gbps Ethernet (450 Mbps) to OC12		
Price Band A	2,860.00	1.00
Price Band B	2,860.00	1.00
Price Band C	2,860.00	1.00
N-MSA	2,860.00	1.00

Service availability limited. Refer to # footnote on Page 20-525.

© 2022 Frontier Communications Parent, Inc. All rights reserved

20. Ethernet Private Line (Cont'd)

20.3 Ethernet Private Line #(Cont'd)

(H) Rates and Charges (Cont'd)

(1) On-Net Channel Extensions, per channel extension (Cont'd)

(b) **Unprotected** Channel Extensions (Cont'd)

(Jurisdiction: Illinois (C)
Indiana, Michigan, North Carolina, Ohio, (C)
South Carolina, and Wisconsin) (C)

(3) 5-year Commitment Period/Term Plan (Cont'd)

Interface Type	Monthly Rate	Nonrecurring Charge
(Mapped to SONET at one end) (Cont'd)		
1 Gbps Ethernet (600 Mbps) to OC12		
Price Band A	$3,490.00	$1.00
Price Band B	3,490.00	1.00
Price Band C	3,490.00	1.00
N-MSA	3,490.00	1.00
1 Gbps Ethernet (600 Mbps) to OC12c		
Price Band A	3,490.00	1.00
Price Band B	3,490.00	1.00
Price Band C	3,490.00	1.00
N-MSA	3,490.00	1.00
1 Gbps Ethernet (Full Rate) to OC48		
Price Band A	4,890.00	1.00
Price Band B	4,890.00	1.00
Price Band C	4,890.00	1.00
N-MSA	4,890.00	1.00
1 Gbps Fibre Channel (Full Rate) to OC48		
Price Band A	5,380.00	1.00
Price Band B	5,380.00	1.00
Price Band C	5,380.00	1.00
N-MSA	5,380.00	1.00
1 Gbps FICON (Full Rate) to OC48		
Price Band A	5,380.00	1.00
Price Band B	5,380.00	1.00
Price Band C	5,380.00	1.00
N-MSA	5,380.00	1.00

Service availability limited. Refer to # footnote on Page 20-525.

© 2022 Frontier Communications Parent, Inc. All rights reserved

20. Ethernet Private Line (Cont'd)

20.3 Ethernet Private Line #(Cont'd)

(H) Rates and Charges (Cont'd)

(1) On-Net Channel Extensions, per channel extension (Cont'd)

(b) **Unprotected** Channel Extensions (Cont'd)

(Jurisdiction: Illinois (C)
Indiana, Michigan, North Carolina, Ohio, (C)
South Carolina, and Wisconsin) (C)

(4) 7-year Commitment Period/Term Plan

Interface Type	Monthly Rate	Nonrecurring Charge
10 Mbps Ethernet (Full Rate)		
Price Band A	$ 480.00	$1.00
Price Band B	480.00	1.00
Price Band C	480.00	1.00
N-MSA	480.00	1.00
100 Mbps Ethernet (50 Mbps)		
Price Band A	790.00	1.00
Price Band B	790.00	1.00
Price Band C	790.00	1.00
N-MSA	790.00	1.00
100 Mbps Ethernet (Full Rate)		
Price Band A	1,100.00	1.00
Price Band B	1,100.00	1.00
Price Band C	1,100.00	1.00
N-MSA	1,100.00	1.00

Service availability limited. Refer to # footnote on Page 20-525.

© 2022 Frontier Communications Parent, Inc. All rights reserved

20. Ethernet Private Line (Cont'd)

20.3 Ethernet Private Line #(Cont'd)

(H) Rates and Charges (Cont'd)

(1) On-Net Channel Extensions, per channel extension (Cont'd)

(b) **Unprotected** Channel Extensions (Cont'd)

(Jurisdiction: Illinois (C)
Indiana, Michigan, North Carolina, Ohio, (C)
South Carolina, and Wisconsin) (C)

(4) 7-year Commitment Period/Term Plan (Cont'd)

Interface Type	Monthly Rate	Nonrecurring Charge
1 Gbps Ethernet (50 Mbps)		
Price Band A	$790.00	$1.00
Price Band B	790.00	1.00
Price Band C	790.00	1.00
N-MSA	790.00	1.00
1 Gbps Ethernet (150 Mbps)*		
Price Band A	1,450.00	1.00
Price Band B	1,450.00	1.00
Price Band C	1,450.00	1.00
N-MSA	1,450.00	1.00
1 Gbps Ethernet (300 Mbps)		
Price Band A	2,100.00	1.00
Price Band B	2,100.00	1.00
Price Band C	2,100.00	1.00
N-MSA	2,100.00	1.00
1 Gbps Ethernet (450 Mbps)		
Price Band A	2,750.00	1.00
Price Band B	2,750.00	1.00
Price Band C	2,750.00	1.00
N-MSA	2,750.00	1.00

Service availability limited. Refer to # footnote on Page 20-525.

© 2022 Frontier Communications Parent, Inc. All rights reserved

20. Ethernet Private Line (Cont'd)

20.3 Ethernet Private Line #(Cont'd)

(H) Rates and Charges (Cont'd)

(1) On-Net Channel Extensions, per channel extension (Cont'd)

(b) **Unprotected** Channel Extensions (Cont'd)

(Jurisdiction: Illinois (C)
Indiana, Michigan, North Carolina, Ohio, (C)
South Carolina, and Wisconsin) (C)

(4) 7-year Commitment Period/Term Plan (Cont'd)

Interface Type	Monthly Rate	Nonrecurring Charge
1 Gbps Ethernet (600 Mbps)		
Price Band A	$3,400.00	$1.00
Price Band B	3,400.00	1.00
Price Band C	3,400.00	1.00
N-MSA	3,400.00	1.00
1 Gbps Ethernet (Full Rate)		
Price Band A	4,760.00	1.00
Price Band B	4,760.00	1.00
Price Band C	4,760.00	1.00
N-MSA	4,760.00	1.00
1 Gbps Fibre Channel (Full Rate)		
Price Band A	5,240.00	1.00
Price Band B	5,240.00	1.00
Price Band C	5,240.00	1.00
N-MSA	5,240.00	1.00
1 Gbps FICON (Full Rate)		
Price Band A	5,240.00	1.00
Price Band B	5,240.00	1.00
Price Band C	5,240.00	1.00
N-MSA	5,240.00	1.00

Service availability limited. Refer to # footnote on Page 20-525.

© 2022 Frontier Communications Parent, Inc. All rights reserved

20. Ethernet Private Line (Cont'd)

20.3 Ethernet Private Line #(Cont'd)

(H) Rates and Charges (Cont'd)

(1) On-Net Channel Extensions, per channel extension (Cont'd)

(b) **Unprotected** Channel Extensions (Cont'd)

(Jurisdiction: Illinois (C)
Indiana, Michigan, North Carolina, Ohio, (C)
South Carolina, and Wisconsin) (C)

(4) 7-year Commitment Period/Term Plan (Cont'd)

Interface Type	Monthly Rate	Nonrecurring Charge
(Mapped to SONET at one end)		
10 Mbps Ethernet (Full Rate) to STS1		
Price Band A	$ 480.00	$1.00
Price Band B	480.00	1.00
Price Band C	480.00	1.00
N-MSA	480.00	1.00
100 Mbps Ethernet (50 Mbps) to STS1		
Price Band A	790.00	1.00
Price Band B	790.00	1.00
Price Band C	790.00	1.00
N-MSA	790.00	1.00
100 Mbps Ethernet (Full Rate) to OC3c		
Price Band A	1,100.00	1.00
Price Band B	1,100.00	1.00
Price Band C	1,100.00	1.00
N-MSA	1,100.00	1.00

Service availability limited. Refer to # footnote on Page 20-525.

© 2022 Frontier Communications Parent, Inc. All rights reserved

20. Ethernet Private Line (Cont'd)

20.3 Ethernet Private Line #(Cont'd)

(H) Rates and Charges (Cont'd)

(1) On-Net Channel Extensions, per channel extension (Cont'd)

(b) **Unprotected** Channel Extensions (Cont'd)

(Jurisdiction: Illinois (C)
Indiana, Michigan, North Carolina, Ohio, (C)
South Carolina, and Wisconsin) (C)

(4) 7-year Commitment Period/Term Plan (Cont'd)

Interface Type	Monthly Rate	Nonrecurring Charge
(Mapped to SONET at one end) (Cont'd)		
1 Gbps Ethernet (50 Mbps) to OC3		
Price Band A	$ 790.00	$1.00
Price Band B	790.00	1.00
Price Band C	790.00	1.00
N-MSA	790.00	1.00
1 Gbps Ethernet (150 Mbps) to OC3		
Price Band A	1,450.00	1.00
Price Band B	1,450.00	1.00
Price Band C	1,450.00	1.00
N-MSA	1,450.00	1.00
1 Gbps Ethernet (300 Mbps) to OC12		
Price Band A	2,100.00	1.00
Price Band B	2,100.00	1.00
Price Band C	2,100.00	1.00
N-MSA	2,100.00	1.00
1 Gbps Ethernet (450 Mbps) to OC12		
Price Band A	2,750.00	1.00
Price Band B	2,750.00	1.00
Price Band C	2,750.00	1.00
N-MSA	2,750.00	1.00

Service availability limited. Refer to # footnote on Page 20-525.

© 2022 Frontier Communications Parent, Inc. All rights reserved

20. Ethernet Private Line (Cont'd)

20.3 Ethernet Private Line #(Cont'd)

(H) Rates and Charges (Cont'd)

(1) On-Net Channel Extensions, per channel extension (Cont'd)

(b) **Unprotected** Channel Extensions (Cont'd)

(Jurisdiction: Illinois (C)
Indiana, Michigan, North Carolina, Ohio, (C)
South Carolina, and Wisconsin) (C)

(4) 7-year Commitment Period/Term Plan (Cont'd)

Interface Type	Monthly Rate	Nonrecurring Charge
(Mapped to SONET at one end) (Cont'd)		
1 Gbps Ethernet (600 Mbps) to OC12		
Price Band A	$3,400.00	$1.00
Price Band B	3,400.00	1.00
Price Band C	3,400.00	1.00
N-MSA	3,400.00	1.00
1 Gbps Ethernet (600 Mbps) to OC12c		
Price Band A	3,400.00	1.00
Price Band B	3,400.00	1.00
Price Band C	3,400.00	1.00
N-MSA	3,400.00	1.00
1 Gbps Ethernet (Full Rate) to OC48		
Price Band A	4,760.00	1.00
Price Band B	4,760.00	1.00
Price Band C	4,760.00	1.00
N-MSA	4,760.00	1.00
1 Gbps Fibre Channel (Full Rate) to OC48		
Price Band A	5,240.00	1.00
Price Band B	5,240.00	1.00
Price Band C	5,240.00	1.00
N-MSA	5,240.00	1.00
1 Gbps FICON (Full Rate) to OC48		
Price Band A	5,240.00	1.00
Price Band B	5,240.00	1.00
Price Band C	5,240.00	1.00
N-MSA	5,240.00	1.00

Service availability limited. Refer to # footnote on Page 20-525.

© 2022 Frontier Communications Parent, Inc. All rights reserved

20. Ethernet Private Line (Cont'd)

20.3 Ethernet Private Line #(Cont'd)

(H) Rates and Charges (Cont'd)

(2) On-Net Channel Mileage

(a) **Protected** Channel Mileage

(Jurisdiction: Illinois
Indiana, Michigan, North Carolina, Ohio, (C)
South Carolina, and Wisconsin) (C)
(C)

(1) 1-year Commitment Period/Term Plan

Interface Type	Monthly Rate Fixed	Monthly Rate Per Mile
10 Mbps Ethernet (Full Rate)		
Price Band A	$ 180.00	
Price Band B	180.00	
Price Band C	180.00	
N-MSA	180.00	
Price Band A		$ 96.00
Price Band B		96.00
Price Band C		96.00
N-MSA		96.00
100 Mbps Ethernet (50 Mbps)		
Price Band A	280.00	
Price Band B	280.00	
Price Band C	280.00	
N-MSA	280.00	
Price Band A		120.00
Price Band B		120.00
Price Band C		120.00
N-MSA		120.00
100 Mbps Ethernet (Full Rate)		
Price Band A	375.00	
Price Band B	375.00	
Price Band C	375.00	
N-MSA	375.00	
Price Band A		143.00
Price Band B		143.00
Price Band C		143.00
N-MSA		143.00

Service availability limited. Refer to # footnote on Page 20-525.

© 2022 Frontier Communications Parent, Inc. All rights reserved

20. Ethernet Private Line (Cont'd)

20.3 Ethernet Private Line #(Cont'd)

(H) Rates and Charges (Cont'd)

(2) On-Net Channel Mileage (Cont'd)

(a) **Protected** Channel Mileage (Cont'd)

(Jurisdiction: Illinois (C)
Indiana, Michigan, North Carolina, Ohio, (C)
South Carolina, and Wisconsin) (C)

(1) 1-year Commitment Period/Term Plan (Cont'd)

Interface Type	Monthly Rate Fixed	Monthly Rate Per Mile
1 Gbps Ethernet (50 Mbps)		
Price Band A	$280.00	
Price Band B	280.00	
Price Band C	280.00	
N-MSA	280.00	
Price Band A		$120.00
Price Band B		120.00
Price Band C		120.00
N-MSA		120.00
1 Gbps Ethernet (150 Mbps)		
Price Band A	410.00	
Price Band B	410.00	
Price Band C	410.00	
N-MSA	410.00	
Price Band A		155.00
Price Band B		155.00
Price Band C		155.00
N-MSA		155.00

Service availability limited. Refer to # footnote on Page 20-525.

© 2022 Frontier Communications Parent, Inc. All rights reserved

20. Ethernet Private Line (Cont'd)

20.3 Ethernet Private Line #(Cont'd)

(H) Rates and Charges (Cont'd)

(2) On-Net Channel Mileage (Cont'd)

(a) **Protected** Channel Mileage (Cont'd)

(Jurisdiction: Illinois (C)
Indiana, Michigan, North Carolina, Ohio, (C)
South Carolina, and Wisconsin) (C)

(1) 1-year Commitment Period/Term Plan (Cont'd)

Interface Type	Monthly Rate Fixed	Monthly Rate Per Mile
1 Gbps Ethernet (300 Mbps)		
Price Band A	$540.00	
Price Band B	540.00	
Price Band C	540.00	
N-MSA	540.00	
Price Band A		$190.00
Price Band B		190.00
Price Band C		190.00
N-MSA		190.00
1 Gbps Ethernet (450 Mbps)		
Price Band A	670.00	
Price Band B	670.00	
Price Band C	670.00	
N-MSA	670.00	
Price Band A		225.00
Price Band B		225.00
Price Band C		225.00
N-MSA		225.00

Service availability limited. Refer to # footnote on Page 20-525.

© 2022 Frontier Communications Parent, Inc. All rights reserved

20. Ethernet Private Line (Cont'd)

20.3 Ethernet Private Line #(Cont'd)

(H) Rates and Charges (Cont'd)

(2) On-Net Channel Mileage (Cont'd)

(a) **Protected** Channel Mileage (Cont'd)

(Jurisdiction: Illinois (C)
Indiana, Michigan, North Carolina, Ohio, (C)
South Carolina, and Wisconsin) (C)

(1) 1-year Commitment Period/Term Plan (Cont'd)

Interface Type	Monthly Rate Fixed	Monthly Rate Per Mile
1 Gbps Ethernet (600 Mbps)		
Price Band A	$ 800.00	
Price Band B	800.00	
Price Band C	800.00	
N-MSA	800.00	
Price Band A		$260.00
Price Band B		260.00
Price Band C		260.00
N-MSA		260.00
1 Gbps Ethernet (Full Rate)		
Price Band A	1,120.00	
Price Band B	1,120.00	
Price Band C	1,120.00	
N-MSA	1,120.00	
Price Band A		364.00
Price Band B		364.00
Price Band C		364.00
N-MSA		364.00

Service availability limited. Refer to # footnote on Page 20-525.

© 2022 Frontier Communications Parent, Inc. All rights reserved

20. Ethernet Private Line (Cont'd)

20.3 Ethernet Private Line #(Cont'd)

(H) Rates and Charges (Cont'd)

(2) On-Net Channel Mileage (Cont'd)

(a) **Protected** Channel Mileage (Cont'd)

(Jurisdiction: Illinois (C)
Indiana, Michigan, North Carolina, Ohio, (C)
South Carolina, and Wisconsin) (C)

(1) 1-year Commitment Period/Term Plan (Cont'd)

Interface Type		Monthly Rate Fixed	Monthly Rate Per Mile
1 Gbps Fiber Channel (Full Rate)			
Price Band A		$1,235.00	
Price Band B		1,235.00	
Price Band C		1,235.00	
N-MSA		1,235.00	
	1HQQS		
Price Band A			$401.00
Price Band B			401.00
Price Band C			401.00
N-MSA			401.00
1 Gbps FICON (Full Rate)			
Price Band A		1,235.00	
Price Band B		1,235.00	
Price Band C		1,235.00	
N-MSA		1,235.00	
	1HQQS		
Price Band A			401.00
Price Band B			401.00
Price Band C			401.00
N-MSA			401.00

Service availability limited. Refer to # footnote on Page 20-525.

© 2022 Frontier Communications Parent, Inc. All rights reserved

20. Ethernet Private Line (Cont'd)

20.3 Ethernet Private Line #(Cont'd)

(H) Rates and Charges (Cont'd)

(2) On-Net Channel Mileage (Cont'd)

(a) **Protected** Channel Mileage (Cont'd)

(Jurisdiction: Illinois (C)
Indiana, Michigan, North Carolina, Ohio, (C)
South Carolina, and Wisconsin) (C)

(1) 1-year Commitment Period/Term Plan (Cont'd)

Interface Type	Monthly Rate Fixed	Monthly Rate Per Mile
(Mapped to SONET at one end)		
10 Mbps Ethernet (Full Rate) to STS1		
Price Band A	$180.00	
Price Band B	180.00	
Price Band C	180.00	
N-MSA	180.00	
Price Band A		$ 96.00
Price Band B		96.00
Price Band C		96.00
N-MSA		96.00
100 Mbps Ethernet (50 Mbps) to STS1		
Price Band A	280.00	
Price Band B	280.00	
Price Band C	280.00	
N-MSA	280.00	
Price Band A		120.00
Price Band B		120.00
Price Band C		120.00
N-MSA		120.00
100 Mbps Ethernet (Full Rate) to OC3c		
Price Band A	375.00	
Price Band B	375.00	
Price Band C	375.00	
N-MSA	375.00	
Price Band A		143.00
Price Band B		143.00
Price Band C		143.00
N-MSA		143.00

Service availability limited. Refer to # footnote on Page 20-525.

© 2022 Frontier Communications Parent, Inc. All rights reserved

20. Ethernet Private Line (Cont'd)

20.3 Ethernet Private Line #(Cont'd)

(H) Rates and Charges (Cont'd)

(2) On-Net Channel Mileage (Cont'd)

(a) **Protected** Channel Mileage (Cont'd)

(Jurisdiction: Illinois (C)
Indiana, Michigan, North Carolina, Ohio, (C)
South Carolina, and Wisconsin) (C)

(1) 1-year Commitment Period/Term Plan (Cont'd)

Interface Type	Monthly Rate Fixed	Monthly Rate Per Mile
(Mapped to SONET at one end) (Cont'd)		
1 Gbps Ethernet (50 Mbps) to OC3		
Price Band A	$ 280.00	
Price Band B	280.00	
Price Band C	280.00	
N-MSA	280.00	
Price Band A		$120.00
Price Band B		120.00
Price Band C		120.00
N-MSA		120.00
1 Gbps Ethernet (150 Mbps) to OC3		
Price Band A	410.00	
Price Band B	410.00	
Price Band C	410.00	
N-MSA	410.00	
Price Band A		155.00
Price Band B		155.00
Price Band C		155.00
N-MSA		155.00

Service availability limited. Refer to # footnote on Page 20-525.

© 2022 Frontier Communications Parent, Inc. All rights reserved

20. Ethernet Private Line (Cont'd)

20.3 Ethernet Private Line #(Cont'd)

(H) Rates and Charges (Cont'd)

(2) On-Net Channel Mileage (Cont'd)

(a) **Protected** Channel Mileage (Cont'd)

(Jurisdiction: Illinois (C)
Indiana, Michigan, North Carolina, Ohio, (C)
South Carolina, and Wisconsin) (C)

(1) 1-year Commitment Period/Term Plan (Cont'd)

Interface Type	Monthly Rate Fixed	Monthly Rate Per Mile
(Mapped to SONET at one end) (Cont'd)		
1 Gbps Ethernet (300 Mbps) to OC12		
Price Band A	$540.00	
Price Band B	540.00	
Price Band C	540.00	
N-MSA	540.00	
Price Band A		$190.00
Price Band B		190.00
Price Band C		190.00
N-MSA		190.00
1 Gbps Ethernet (450 Mbps) to OC12		
Price Band A	670.00	
Price Band B	670.00	
Price Band C	670.00	
N-MSA	670.00	
Price Band A		225.00
Price Band B		225.00
Price Band C		225.00
N-MSA		225.00

Service availability limited. Refer to # footnote on Page 20-525.

© 2022 Frontier Communications Parent, Inc. All rights reserved

20. Ethernet Private Line (Cont'd)

20.3 Ethernet Private Line #(Cont'd)

(H) Rates and Charges (Cont'd)

(2) On-Net Channel Mileage (Cont'd)

(a) **Protected** Channel Mileage (Cont'd)

(Jurisdiction: Illinois (C)
Indiana, Michigan, North Carolina, Ohio, (C)
South Carolina, and Wisconsin) (C)

(1) 1-year Commitment Period/Term Plan (Cont'd)

Interface Type	Monthly Rate Fixed	Monthly Rate Per Mile
(Mapped to SONET at one end) (Cont'd)		
1 Gbps Ethernet (600 Mbps) to OC12		
Price Band A	$800.00	
Price Band B	800.00	
Price Band C	800.00	
N-MSA	800.00	
Price Band A		$260.00
Price Band B		260.00
Price Band C		260.00
N-MSA		260.00
1 Gbps Ethernet (600 Mbps) to OC12c		
Price Band A	800.00	
Price Band B	800.00	
Price Band C	800.00	
N-MSA	800.00	
Price Band A		260.00
Price Band B		260.00
Price Band C		260.00
N-MSA		260.00

Service availability limited. Refer to # footnote on Page 20-525.

© 2022 Frontier Communications Parent, Inc. All rights reserved

20. Ethernet Private Line (Cont'd)

20.3 Ethernet Private Line #(Cont'd)

(H) Rates and Charges (Cont'd)

(2) On-Net Channel Mileage (Cont'd)

(a) **Protected** Channel Mileage (Cont'd)

(Jurisdiction: Illinois (C)
Indiana, Michigan, North Carolina, Ohio, (C)
South Carolina, and Wisconsin) (C)

(1) 1-year Commitment Period/Term Plan (Cont'd)

Interface Type	Monthly Rate Fixed	Monthly Rate Per Mile
(Mapped to SONET at one end) (Cont'd)		
1 Gbps Ethernet (Full Rate) to OC48		
Price Band A	$1,120.00	
Price Band B	1,120.00	
Price Band C	1,120.00	
N-MSA	1,120.00	
Price Band A		$364.00
Price Band B		364.00
Price Band C		364.00
N-MSA		364.00
1 Gbps Fiber Channel (Full Rate) to OC48		
Price Band A	1,235.00	
Price Band B	1,235.00	
Price Band C	1,235.00	
N-MSA	1,235.00	
Price Band A		401.00
Price Band B		401.00
Price Band C		401.00
N-MSA		401.00

Service availability limited. Refer to # footnote on Page 20-525.

© 2022 Frontier Communications Parent, Inc. All rights reserved

20. Ethernet Private Line (Cont'd)

20.3 Ethernet Private Line #(Cont'd)

(H) Rates and Charges (Cont'd)

(2) On-Net Channel Mileage (Cont'd)

(a) **Protected** Channel Mileage (Cont'd)

(Jurisdiction: Illinois (C)
Indiana, Michigan, North Carolina, Ohio, (C)
South Carolina, and Wisconsin) (C)

(1) 1-year Commitment Period/Term Plan (Cont'd)

Interface Type	Monthly Rate Fixed	Monthly Rate Per Mile
(Mapped to SONET at one end) (Cont'd)		
1 Gbps FICON (Full Rate) to OC48		
Price Band A	$1,235.00	
Price Band B	1,235.00	
Price Band C	1,235.00	
N-MSA	1,235.00	
Price Band A		$401.00
Price Band B		401.00
Price Band C		401.00
N-MSA		401.00

Service availability limited. Refer to # footnote on Page 20-525.

© 2022 Frontier Communications Parent, Inc. All rights reserved

20. Ethernet Private Line (Cont'd)

20.3 Ethernet Private Line #(Cont'd)

(H) Rates and Charges (Cont'd)

(2) On-Net Channel Mileage (Cont'd)

(a) **Protected** Channel Mileage (Cont'd)

(Jurisdiction: Illinois (C)
Indiana, Michigan, North Carolina, Ohio, (C)
South Carolina, and Wisconsin) (C)

(2) 3-year Commitment Period/Term Plan

Interface Type	Monthly Rate Fixed	Monthly Rate Per Mile
10 Mbps Ethernet (Full Rate)		
Price Band A	$ 135.00	
Price Band B	135.00	
Price Band C	135.00	
N-MSA	135.00	
Price Band A		$ 74.00
Price Band B		74.00
Price Band C		74.00
N-MSA		74.00
100 Mbps Ethernet (50 Mbps)		
Price Band A	220.00	
Price Band B	220.00	
Price Band C	220.00	
N-MSA	220.00	
Price Band A		91.00
Price Band B		91.00
Price Band C		91.00
N-MSA		91.00
100 Mbps Ethernet (Full Rate)		
Price Band A	305.00	
Price Band B	305.00	
Price Band C	305.00	
N-MSA	305.00	
Price Band A		108.00
Price Band B		108.00
Price Band C		108.00
N-MSA		108.00

Service availability limited. Refer to # footnote on Page 20-525.

© 2022 Frontier Communications Parent, Inc. All rights reserved

20. Ethernet Private Line (Cont'd)

20.3 Ethernet Private Line #(Cont'd)

(H) Rates and Charges (Cont'd)

(2) On-Net Channel Mileage (Cont'd)

(a) **Protected** Channel Mileage (Cont'd)

(Jurisdiction: Illinois (C)
Indiana, Michigan, North Carolina, Ohio, (C)
South Carolina, and Wisconsin) (C)

(2) 3-year Commitment Period/Term Plan (Cont'd)

Interface Type	Monthly Rate Fixed	Monthly Rate Per Mile
1 Gbps Ethernet (50 Mbps)		
Price Band A	$220.00	
Price Band B	220.00	
Price Band C	220.00	
N-MSA	220.00	
Price Band A		$91.00
Price Band B		91.00
Price Band C		91.00
N-MSA		91.00
1 Gbps Ethernet (150 Mbps)		
Price Band A	340.00	
Price Band B	340.00	
Price Band C	340.00	
N-MSA	340.00	
Price Band A		126.00
Price Band B		126.00
Price Band C		126.00
N-MSA		126.00

Service availability limited. Refer to # footnote on Page 20-525.

© 2022 Frontier Communications Parent, Inc. All rights reserved

20. Ethernet Private Line (Cont'd)

20.3 Ethernet Private Line #(Cont'd)

(H) Rates and Charges (Cont'd)

(2) On-Net Channel Mileage (Cont'd)

(a) **Protected** Channel Mileage (Cont'd)

(Jurisdiction: Illinois (C)
Indiana, Michigan, North Carolina, Ohio, (C)
South Carolina, and Wisconsin) (C)

(2) 3-year Commitment Period/Term Plan (Cont'd)

Interface Type	Monthly Rate Fixed	Monthly Rate Per Mile
1 Gbps Ethernet (300 Mbps)		
Price Band A	$460.00	
Price Band B	460.00	
Price Band C	460.00	
N-MSA	460.00	
Price Band A		$161.00
Price Band B		161.00
Price Band C		161.00
N-MSA		161.00
1 Gbps Ethernet (450 Mbps)*		
Price Band A	580.00	
Price Band B	580.00	
Price Band C	580.00	
N-MSA	580.00	
Price Band A		196.00
Price Band B		196.00
Price Band C		196.00
N-MSA		196.00

Service availability limited. Refer to # footnote on Page 20-525.

© 2022 Frontier Communications Parent, Inc. All rights reserved

20. Ethernet Private Line (Cont'd)

20.3 Ethernet Private Line #(Cont'd)

(H) Rates and Charges (Cont'd)

(2) On-Net Channel Mileage (Cont'd)

(a) **Protected** Channel Mileage (Cont'd)

(Jurisdiction: Illinois (C)
Indiana, Michigan, North Carolina, Ohio, (C)
South Carolina, and Wisconsin) (C)

(2) 3-year Commitment Period/Term Plan (Cont'd)

Interface Type	Monthly Rate Fixed	Monthly Rate Per Mile
1 Gbps Ethernet (600 Mbps)		
Price Band A	$700.00	
Price Band B	700.00	
Price Band C	700.00	
N-MSA	700.00	
Price Band A		$230.00
Price Band B		230.00
Price Band C		230.00
N-MSA		230.00
1 Gbps Ethernet (Full Rate)		
Price Band A	980.00	
Price Band B	980.00	
Price Band C	980.00	
N-MSA	980.00	
Price Band A		322.00
Price Band B		322.00
Price Band C		322.00
N-MSA		322.00

Service availability limited. Refer to # footnote on Page 20-525.

© 2022 Frontier Communications Parent, Inc. All rights reserved

20. Ethernet Private Line (Cont'd)

20.3 Ethernet Private Line #(Cont'd)

(H) Rates and Charges (Cont'd)

(2) On-Net Channel Mileage (Cont'd)

(a) **Protected** Channel Mileage (Cont'd)

(Jurisdiction: Illinois (C)
Indiana, Michigan, North Carolina, Ohio, (C)
South Carolina, and Wisconsin) (C)

(2) 3-year Commitment Period/Term Plan (Cont'd)

Interface Type	Monthly Rate Fixed	Monthly Rate Per Mile
1 Gbps Fibre Channel (Full Rate)		
Price Band A	$1,080.00	
Price Band B	1,080.00	
Price Band C	1,080.00	
N-MSA	1,080.00	
Price Band A		$355.00
Price Band B		355.00
Price Band C		355.00
N-MSA		355.00
1 Gbps FICON (Full Rate)		
Price Band A	1,080.00	
Price Band B	1,080.00	
Price Band C	1,080.00	
N-MSA	1,080.00	
Price Band A		355.00
Price Band B		355.00
Price Band C		355.00
N-MSA		355.00

Service availability limited. Refer to # footnote on Page 20-525.

© 2022 Frontier Communications Parent, Inc. All rights reserved

20. Ethernet Private Line (Cont'd)

20.3 Ethernet Private Line #(Cont'd)

(H) Rates and Charges (Cont'd)

(2) On-Net Channel Mileage (Cont'd)

(a) **Protected** Channel Mileage (Cont'd)

(Jurisdiction: Illinois (C)
Indiana, Michigan, North Carolina, Ohio, (C)
South Carolina, and Wisconsin) (C)

(2) 3-year Commitment Period/Term Plan (Cont'd)

Interface Type	Monthly Rate Fixed	Monthly Rate Per Mile
(Mapped to SONET at one end)		
10 Mbps Ethernet (Full Rate) to STS1		
Price Band A	$135.00	
Price Band B	135.00	
Price Band C	135.00	
N-MSA	135.00	
Price Band A		$74.00
Price Band B		74.00
Price Band C		74.00
N-MSA		74.00
100 Mbps Ethernet (50 Mbps) to STS1		
Price Band A	220.00	
Price Band B	220.00	
Price Band C	220.00	
N-MSA	220.00	
Price Band A		91.00
Price Band B		91.00
Price Band C		91.00
N-MSA		91.00
100 Mbps Ethernet (Full Rate) to OC3c		
Price Band A	305.00	
Price Band B	305.00	
Price Band C	305.00	
N-MSA	305.00	
Price Band A		108.00
Price Band B		108.00
Price Band C		108.00
N-MSA		108.00

Service availability limited. Refer to # footnote on Page 20-525.

© 2022 Frontier Communications Parent, Inc. All rights reserved

20. Ethernet Private Line (Cont'd)

20.3 Ethernet Private Line #(Cont'd)

(H) Rates and Charges (Cont'd)

(2) On-Net Channel Mileage (Cont'd)

(a) **Protected** Channel Mileage (Cont'd)

(Jurisdiction: Illinois (C)
Indiana, Michigan, North Carolina, Ohio, (C)
South Carolina, and Wisconsin) (C)

(2) 3-year Commitment Period/Term Plan (Cont'd)

Interface Type	Monthly Rate Fixed	Monthly Rate Per Mile
(Mapped to SONET at one end) (Cont'd)		
1 Gbps Ethernet (50 Mbps) to OC3		
Price Band A	$ 220.00	
Price Band B	220.00	
Price Band C	220.00	
N-MSA	220.00	
Price Band A		$ 91.00
Price Band B		91.00
Price Band C		91.00
N-MSA		91.00
1 Gbps Ethernet (150 Mbps) to OC3		
Price Band A	340.00	
Price Band B	340.00	
Price Band C	340.00	
N-MSA	340.00	
Price Band A		126.00
Price Band B		126.00
Price Band C		126.00
N-MSA		126.00

Service availability limited. Refer to # footnote on Page 20-525.

© 2022 Frontier Communications Parent, Inc. All rights reserved

20. Ethernet Private Line (Cont'd)

20.3 Ethernet Private Line #(Cont'd)

(H) Rates and Charges (Cont'd)

(2) On-Net Channel Mileage (Cont'd)

(a) **Protected** Channel Mileage (Cont'd)

(Jurisdiction: Illinois (C)
Indiana, Michigan, North Carolina, Ohio, (C)
South Carolina, and Wisconsin) (C)

(2) 3-year Commitment Period/Term Plan (Cont'd)

Interface Type	Monthly Rate Fixed	Monthly Rate Per Mile
(Mapped to SONET at one end) (Cont'd)		
1 Gbps Ethernet (300 Mbps) to OC12		
Price Band A	$460.00	
Price Band B	460.00	
Price Band C	460.00	
N-MSA	460.00	
Price Band A		$161.00
Price Band B		161.00
Price Band C		161.00
N-MSA		161.00
1 Gbps Ethernet (450 Mbps) to OC12		
Price Band A	580.00	
Price Band B	580.00	
Price Band C	580.00	
N-MSA	580.00	
Price Band A		196.00
Price Band B		196.00
Price Band C		196.00
N-MSA		196.00

Service availability limited. Refer to # footnote on Page 20-525.

© 2022 Frontier Communications Parent, Inc. All rights reserved

20. Ethernet Private Line (Cont'd)

20.3 Ethernet Private Line #(Cont'd)

(H) Rates and Charges (Cont'd)

(2) On-Net Channel Mileage (Cont'd)

(a) **Protected** Channel Mileage (Cont'd)

(Jurisdiction: Illinois (C)
Indiana, Michigan, North Carolina, Ohio, (C)
South Carolina, and Wisconsin) (C)

(2) 3-year Commitment Period/Term Plan (Cont'd)

Interface Type	Monthly Rate Fixed	Monthly Rate Per Mile
(Mapped to SONET at one end) (Cont'd)		
1 Gbps Ethernet (600 Mbps) to OC12		
Price Band A	$700.00	
Price Band B	700.00	
Price Band C	700.00	
N-MSA	700.00	
Price Band A		$230.00
Price Band B		230.00
Price Band C		230.00
N-MSA		230.00
1 Gbps Ethernet (600 Mbps) to OC12c		
Price Band A	700.00	
Price Band B	700.00	
Price Band C	700.00	
N-MSA	700.00	
Price Band A		230.00
Price Band B		230.00
Price Band C		230.00
N-MSA		230.00

Service availability limited. Refer to # footnote on Page 20-525.

© 2022 Frontier Communications Parent, Inc. All rights reserved

20. Ethernet Private Line (Cont'd)

20.3 Ethernet Private Line #(Cont'd)

(H) Rates and Charges (Cont'd)

(2) On-Net Channel Mileage (Cont'd)

(a) **Protected** Channel Mileage (Cont'd)

(Jurisdiction: Illinois (C)
Indiana, Michigan, North Carolina, Ohio, (C)
South Carolina, and Wisconsin) (C)

(2) 3-year Commitment Period/Term Plan (Cont'd)

Interface Type	Monthly Rate Fixed	Monthly Rate Per Mile
(Mapped to SONET at one end) (Cont'd)		
1 Gbps Ethernet (Full Rate) to OC48		
Price Band A	$980.00	
Price Band B	980.00	
Price Band C	980.00	
N-MSA	980.00	
Price Band A		$322.00
Price Band B		322.00
Price Band C		322.00
N-MSA		322.00
1 Gbps Fibre Channel (Full Rate) to OC48		
Price Band A	1,080.00	
Price Band B	1,080.00	
Price Band C	1,080.00	
N-MSA	1,080.00	
Price Band A		355.00
Price Band B		355.00
Price Band C		355.00
N-MSA		355.00

Service availability limited. Refer to # footnote on Page 20-525.

© 2022 Frontier Communications Parent, Inc. All rights reserved

20. Ethernet Private Line (Cont'd)

20.3 Ethernet Private Line #(Cont'd)

(H) Rates and Charges (Cont'd)

(2) On-Net Channel Mileage (Cont'd)

(a) **Protected** Channel Mileage (Cont'd)

(Jurisdiction: Illinois (C)
Indiana, Michigan, North Carolina, Ohio, (C)
South Carolina, and Wisconsin) (C)

(2) 3-year Commitment Period/Term Plan (Cont'd)

Interface Type	Monthly Rate Fixed	Monthly Rate Per Mile
(Mapped to SONET at one end) (Cont'd)		
1 Gbps FICON (Full Rate) to OC48		
Price Band A	$1,080.00	
Price Band B	1,080.00	
Price Band C	1,080.00	
N-MSA	1,080.00	
Price Band A		$355.00
Price Band B		355.00
Price Band C		355.00
N-MSA		355.00

Service availability limited. Refer to # footnote on Page 20-525.

© 2022 Frontier Communications Parent, Inc. All rights reserved

20. Ethernet Private Line (Cont'd)

20.3 Ethernet Private Line #(Cont'd)

(H) Rates and Charges (Cont'd)

(2) On-Net Channel Mileage (Cont'd)

(a) **Protected** Channel Mileage (Cont'd)

(Jurisdiction: Illinois (C)
Indiana, Michigan, North Carolina, Ohio, (C)
South Carolina, and Wisconsin) (C)

(3) 5-year Commitment Period/Term Plan

Interface Type	Monthly Rate Fixed	Monthly Rate Per Mile
10 Mbps Ethernet (Full Rate)		
Price Band A	$ 90.00	
Price Band B	90.00	
Price Band C	90.00	
N-MSA	90.00	
Price Band A		$ 63.00
Price Band B		63.00
Price Band C		63.00
N-MSA		63.00
100 Mbps Ethernet (50 Mbps)		
Price Band A	165.00	
Price Band B	165.00	
Price Band C	165.00	
N-MSA	165.00	
Price Band A		77.00
Price Band B		77.00
Price Band C		77.00
N-MSA		77.00
100 Mbps Ethernet (Full Rate)		
Price Band A	240.00	
Price Band B	240.00	
Price Band C	240.00	
N-MSA	240.00	
Price Band A		90.00
Price Band B		90.00
Price Band C		90.00
N-MSA		90.00

Service availability limited. Refer to # footnote on Page 20-525.

© 2022 Frontier Communications Parent, Inc. All rights reserved

20. Ethernet Private Line (Cont'd)

20.3 Ethernet Private Line #(Cont'd)

(H) Rates and Charges (Cont'd)

(2) On-Net Channel Mileage (Cont'd)

(a) **Protected** Channel Mileage (Cont'd)

(Jurisdiction: Illinois (C)
Indiana, Michigan, North Carolina, Ohio, (C)
South Carolina, and Wisconsin) (C)

(3) 5-year Commitment Period/Term Plan (Cont'd)

Interface Type	Monthly Rate Fixed	Monthly Rate Per Mile
1 Gbps Ethernet (50 Mbps)		
Price Band A	$ 165.00	
Price Band B	165.00	
Price Band C	165.00	
N-MSA	165.00	
Price Band A		$ 77.00
Price Band B		77.00
Price Band C		77.00
N-MSA		77.00
1 Gbps Ethernet (150 Mbps)		
Price Band A	290.00	
Price Band B	290.00	
Price Band C	290.00	
N-MSA	290.00	
Price Band A		113.00
Price Band B		113.00
Price Band C		113.00
N-MSA		113.00

Service availability limited. Refer to # footnote on Page 20-525.

© 2022 Frontier Communications Parent, Inc. All rights reserved

20. Ethernet Private Line (Cont'd)

20.3 Ethernet Private Line #(Cont'd)

(H) Rates and Charges (Cont'd)

(2) On-Net Channel Mileage (Cont'd)

(a) **Protected** Channel Mileage (Cont'd)

(Jurisdiction: Illinois (C)
Indiana, Michigan, North Carolina, Ohio, (C)
South Carolina, and Wisconsin) (C)

(3) 5-year Commitment Period/Term Plan (Cont'd)

Interface Type	Monthly Rate Fixed	Monthly Rate Per Mile
1 Gbps Ethernet (300 Mbps)		
Price Band A	$410.00	
Price Band B	410.00	
Price Band C	410.00	
N-MSA	410.00	
Price Band A		$148.00
Price Band B		148.00
Price Band C		148.00
N-MSA		148.00
1 Gbps Ethernet (450 Mbps)		
Price Band A	530.00	
Price Band B	530.00	
Price Band C	530.00	
N-MSA	530.00	
Price Band A		184.00
Price Band B		184.00
Price Band C		184.00
N-MSA		184.00

Service availability limited. Refer to # footnote on Page 20-525.

© 2022 Frontier Communications Parent, Inc. All rights reserved

20. Ethernet Private Line (Cont'd)

20.3 Ethernet Private Line #(Cont'd)

(H) Rates and Charges (Cont'd)

(2) On-Net Channel Mileage (Cont'd)

(a) **Protected** Channel Mileage (Cont'd)

(Jurisdiction: Illinois (C)
Indiana, Michigan, North Carolina, Ohio, (C)
South Carolina, and Wisconsin) (C)

(3) 5-year Commitment Period/Term Plan (Cont'd)

Interface Type	Monthly Rate Fixed	Monthly Rate Per Mile
1 Gbps Ethernet (600 Mbps)		
Price Band A	$650.00	
Price Band B	650.00	
Price Band C	650.00	
N-MSA	650.00	
Price Band A		$219.00
Price Band B		219.00
Price Band C		219.00
N-MSA		219.00
1 Gbps Ethernet (Full Rate)		
Price Band A	910.00	
Price Band B	910.00	
Price Band C	910.00	
N-MSA	910.00	
Price Band A		307.00
Price Band B		307.00
Price Band C		307.00
N-MSA		307.00

Service availability limited. Refer to # footnote on Page 20-525.

© 2022 Frontier Communications Parent, Inc. All rights reserved

20. Ethernet Private Line (Cont'd)

20.3 Ethernet Private Line #(Cont'd)

(H) Rates and Charges (Cont'd)

(2) On-Net Channel Mileage (Cont'd)

(a) **Protected** Channel Mileage (Cont'd)

(Jurisdiction: Illinois (C)
Indiana, Michigan, North Carolina, Ohio, (C)
South Carolina, and Wisconsin) (C)

(3) 5-year Commitment Period/Term Plan (Cont'd)

Interface Type	Monthly Rate Fixed	Monthly Rate Per Mile
1 Gbps Fibre Channel (Full Rate)		
Price Band A	$1,005.00	
Price Band B	1,005.00	
Price Band C	1,005.00	
N-MSA	1,005.00	
Price Band A		$338.00
Price Band B		338.00
Price Band C		338.00
N-MSA		338.00
1 Gbps FICON (Full Rate)		
Price Band A	1,005.00	
Price Band B	1,005.00	
Price Band C	1,005.00	
N-MSA	1,005.00	
Price Band A		338.00
Price Band B		338.00
Price Band C		338.00
N-MSA		338.00

Service availability limited. Refer to # footnote on Page 20-525.

© 2022 Frontier Communications Parent, Inc. All rights reserved

20. Ethernet Private Line (Cont'd)

20.3 Ethernet Private Line #(Cont'd)

(H) Rates and Charges (Cont'd)

(2) On-Net Channel Mileage (Cont'd)

(a) **Protected** Channel Mileage (Cont'd)

(Jurisdiction: Illinois (C)
Indiana, Michigan, North Carolina, Ohio, (C)
South Carolina, and Wisconsin) (C)

(3) 5-year Commitment Period/Term Plan (Cont'd)

Interface Type	Monthly Rate Fixed	Monthly Rate Per Mile
(Mapped to SONET at one end)		
10 Mbps Ethernet (Full Rate) to STS1		
Price Band A	$ 90.00	
Price Band B	90.00	
Price Band C	90.00	
N-MSA	90.00	
Price Band A		$63.00
Price Band B		63.00
Price Band C		63.00
N-MSA		63.00
100 Mbps Ethernet (50 Mbps) to STS1		
Price Band A	165.00	
Price Band B	165.00	
Price Band C	165.00	
N-MSA	165.00	
Price Band A		77.00
Price Band B		77.00
Price Band C		77.00
N-MSA		77.00
100 Mbps Ethernet (Full Rate) to OC3c		
Price Band A	240.00	
Price Band B	240.00	
Price Band C	240.00	
N-MSA	240.00	
Price Band A		90.00
Price Band B		90.00
Price Band C		90.00
N-MSA		90.00

Service availability limited. Refer to # footnote on Page 20-525.

© 2022 Frontier Communications Parent, Inc. All rights reserved

20. Ethernet Private Line (Cont'd)

20.3 Ethernet Private Line #(Cont'd)

(H) Rates and Charges (Cont'd)

(2) On-Net Channel Mileage (Cont'd)

(a) **Protected** Channel Mileage (Cont'd)

(Jurisdiction: Illinois (C)
Indiana, Michigan, North Carolina, Ohio, (C)
South Carolina, and Wisconsin) (C)

(3) 5-year Commitment Period/Term Plan (Cont'd)

Interface Type	Monthly Rate Fixed	Monthly Rate Per Mile
(Mapped to SONET at one end) (Cont'd)		
1 Gbps Ethernet (50 Mbps) to OC3		
Price Band A	$165.00	
Price Band B	165.00	
Price Band C	165.00	
N-MSA	165.00	
Price Band A		$ 77.00
Price Band B		77.00
Price Band C		77.00
N-MSA		77.00
1 Gbps Ethernet (150 Mbps) to OC3		
Price Band A	290.00	
Price Band B	290.00	
Price Band C	290.00	
N-MSA	290.00	
Price Band A		113.00
Price Band B		113.00
Price Band C		113.00
N-MSA		113.00

Service availability limited. Refer to # footnote on Page 20-525.

© 2022 Frontier Communications Parent, Inc. All rights reserved

20. Ethernet Private Line (Cont'd)

20.3 Ethernet Private Line #(Cont'd)

(H) Rates and Charges (Cont'd)

(2) On-Net Channel Mileage (Cont'd)

(a) **Protected** Channel Mileage (Cont'd)

(Jurisdiction: Illinois (C)
Indiana, Michigan, North Carolina, Ohio, (C)
South Carolina, and Wisconsin) (C)

(3) 5-year Commitment Period/Term Plan (Cont'd)

Interface Type	Monthly Rate Fixed	Monthly Rate Per Mile
(Mapped to SONET at one end) (Cont'd)		
1 Gbps Ethernet (300 Mbps) to OC12*		
Price Band A	$410.00	
Price Band B	410.00	
Price Band C	410.00	
N-MSA	410.00	
Price Band A		$148.00
Price Band B		148.00
Price Band C		148.00
N-MSA		148.00
1 Gbps Ethernet (450 Mbps) to OC12*		
Price Band A	530.00	
Price Band B	530.00	
Price Band C	530.00	
N-MSA	530.00	
Price Band A		184.00
Price Band B		184.00
Price Band C		184.00
N-MSA		184.00

Service availability limited. Refer to # footnote on Page 20-525.

© 2022 Frontier Communications Parent, Inc. All rights reserved

20. Ethernet Private Line (Cont'd)

20.3 Ethernet Private Line #(Cont'd)

(H) Rates and Charges (Cont'd)

(2) On-Net Channel Mileage (Cont'd)

(a) **Protected** Channel Mileage (Cont'd)

(Jurisdiction: Illinois (C)
Indiana, Michigan, North Carolina, Ohio, (C)
South Carolina, and Wisconsin) (C)

(3) 5-year Commitment Period/Term Plan (Cont'd)

Interface Type	Monthly Rate Fixed	Monthly Rate Per Mile
(Mapped to SONET at one end) (Cont'd)		
1 Gbps Ethernet (600 Mbps) to OC12*		
Price Band A	$650.00	
Price Band B	650.00	
Price Band C	650.00	
N-MSA	650.00	
Price Band A		$219.00
Price Band B		219.00
Price Band C		219.00
N-MSA		219.00
1 Gbps Ethernet (600 Mbps) to OC12c		
Price Band A	650.00	
Price Band B	650.00	
Price Band C	650.00	
N-MSA	650.00	
Price Band A		219.00
Price Band B		219.00
Price Band C		219.00
N-MSA		219.00

Service availability limited. Refer to # footnote on Page 20-525.

© 2022 Frontier Communications Parent, Inc. All rights reserved

20. Ethernet Private Line (Cont'd)

20.3 Ethernet Private Line #(Cont'd)

(H) Rates and Charges (Cont'd)

(2) On-Net Channel Mileage (Cont'd)

(a) **Protected** Channel Mileage (Cont'd)

(Jurisdiction: Illinois (C)
Indiana, Michigan, North Carolina, Ohio, (C)
South Carolina, and Wisconsin) (C)

(3) 5-year Commitment Period/Term Plan (Cont'd)

Interface Type	Monthly Rate Fixed	Monthly Rate Per Mile
(Mapped to SONET at one end) (Cont'd)		
1 Gbps Ethernet (Full Rate) to OC48		
Price Band A	$ 910.00	
Price Band B	910.00	
Price Band C	910.00	
N-MSA	910.00	
Price Band A		$307.00
Price Band B		307.00
Price Band C		307.00
N-MSA		307.00
1 Gbps Fiber Channel (Full Rate) to OC48		
Price Band A	1,005.00	
Price Band B	1,005.00	
Price Band C	1,005.00	
N-MSA	1,005.00	
Price Band A		338.00
Price Band B		338.00
Price Band C		338.00
N-MSA		338.00

Service availability limited. Refer to # footnote on Page 20-525.

© 2022 Frontier Communications Parent, Inc. All rights reserved

20. Ethernet Private Line (Cont'd)

20.3 Ethernet Private Line #(Cont'd)

(H) Rates and Charges (Cont'd)

(2) On-Net Channel Mileage (Cont'd)

(a) **Protected** Channel Mileage (Cont'd)

(Jurisdiction: Illinois (C)
Indiana, Michigan, North Carolina, Ohio, (C)
South Carolina, and Wisconsin) (C)

(3) 5-year Commitment Period/Term Plan (Cont'd)

Interface Type	Monthly Rate Fixed	Monthly Rate Per Mile
(Mapped to SONET at one end) (Cont'd)		
1 Gbps FICON Channel (Full Rate) to OC48*		
Price Band A	$1,005.00	
Price Band B	1,005.00	
Price Band C	1,005.00	
N-MSA	1,005.00	
Price Band A		$338.00
Price Band B		338.00
Price Band C		338.00
N-MSA		338.00

Service availability limited. Refer to # footnote on Page 20-525.

© 2022 Frontier Communications Parent, Inc. All rights reserved

20. Ethernet Private Line (Cont'd)

20.3 Ethernet Private Line #(Cont'd)

(H) Rates and Charges (Cont'd)

(2) On-Net Channel Mileage (Cont'd)

(a) **Protected** Channel Mileage (Cont'd)

(Jurisdiction: Illinois (C)
Indiana, Michigan, North Carolina, Ohio, (C)
South Carolina, and Wisconsin) (C)

(4) 7-year Commitment Period/Term Plan

Interface Type	Monthly Rate Fixed	Monthly Rate Per Mile
10 Mbps Ethernet (Full Rate)		
Price Band A	$ 80.00	
Price Band B	80.00	
Price Band C	80.00	
N-MSA	80.00	
Price Band A		$ 48.00
Price Band B		48.00
Price Band C		48.00
N-MSA		48.00
100 Mbps Ethernet (50 Mbps)		
Price Band A	150.00	
Price Band B	150.00	
Price Band C	150.00	
N-MSA	150.00	
Price Band A		63.00
Price Band B		63.00
Price Band C		63.00
N-MSA		63.00
100 Mbps Ethernet (Full Rate)		
Price Band A	220.00	
Price Band B	220.00	
Price Band C	220.00	
N-MSA	220.00	
Price Band A		77.00
Price Band B		77.00
Price Band C		77.00
N-MSA		77.00

Service availability limited. Refer to # footnote on Page 20-525.

© 2022 Frontier Communications Parent, Inc. All rights reserved

20. Ethernet Private Line (Cont'd)

20.3 Ethernet Private Line #(Cont'd)

(H) Rates and Charges (Cont'd)

(2) On-Net Channel Mileage (Cont'd)

(a) **Protected** Channel Mileage (Cont'd)

(Jurisdiction: Illinois (C)
Indiana, Michigan, North Carolina, Ohio, (C)
South Carolina, and Wisconsin) (C)

(4) 7-year Commitment Period/Term Plan (Cont'd)

Interface Type	Monthly Rate Fixed	Monthly Rate Per Mile
1 Gbps Ethernet (50 Mbps)		
Price Band A	$150.00	
Price Band B	150.00	
Price Band C	150.00	
N-MSA	150.00	
Price Band A		$ 63.00
Price Band B		63.00
Price Band C		63.00
N-MSA		63.00
1 Gbps Ethernet (150 Mbps)		
Price Band A	275.00	
Price Band B	275.00	
Price Band C	275.00	
N-MSA	275.00	
Price Band A		100.00
Price Band B		100.00
Price Band C		100.00
N-MSA		100.00

Service availability limited. Refer to # footnote on Page 20-525.

© 2022 Frontier Communications Parent, Inc. All rights reserved

20. Ethernet Private Line (Cont'd)

20.3 Ethernet Private Line #(Cont'd)

(H) Rates and Charges (Cont'd)

(2) On-Net Channel Mileage (Cont'd)

(a) **Protected** Channel Mileage (Cont'd)

(Jurisdiction: Illinois (C)
Indiana, Michigan, North Carolina, Ohio, (C)
South Carolina, and Wisconsin) (C)

(4) 7-year Commitment Period/Term Plan (Cont'd)

Interface Type	Monthly Rate Fixed	Monthly Rate Per Mile
1 Gbps Ethernet (300 Mbps)		
Price Band A	$400.00	
Price Band B	400.00	
Price Band C	400.00	
N-MSA	400.00	
Price Band A		$137.00
Price Band B		137.00
Price Band C		137.00
N-MSA		137.00
1 Gbps Ethernet (450 Mbps)		
Price Band A	525.00	
Price Band B	525.00	
Price Band C	525.00	
N-MSA	525.00	
Price Band A		174.00
Price Band B		174.00
Price Band C		174.00
N-MSA		174.00

Service availability limited. Refer to # footnote on Page 20-525.

© 2022 Frontier Communications Parent, Inc. All rights reserved

20. Ethernet Private Line (Cont'd)

20.3 Ethernet Private Line #(Cont'd)

(H) Rates and Charges (Cont'd)

(2) On-Net Channel Mileage (Cont'd)

(a) **Protected** Channel Mileage (Cont'd)

(Jurisdiction: Illinois (C)
Indiana, Michigan, North Carolina, Ohio, (C)
South Carolina, and Wisconsin) (C)

(4) 7-year Commitment Period/Term Plan (Cont'd)

Interface Type	Monthly Rate Fixed	Monthly Rate Per Mile
1 Gbps Ethernet (600 Mbps)		
Price Band A	$650.00	
Price Band B	650.00	
Price Band C	650.00	
N-MSA	650.00	
Price Band A		$210.00
Price Band B		210.00
Price Band C		210.00
N-MSA		210.00
1 Gbps Ethernet (Full Rate)		
Price Band A	910.00	
Price Band B	910.00	
Price Band C	910.00	
N-MSA	910.00	
Price Band A		294.00
Price Band B		294.00
Price Band C		294.00
N-MSA		294.00

Service availability limited. Refer to # footnote on Page 20-525.

© 2022 Frontier Communications Parent, Inc. All rights reserved

20. Ethernet Private Line (Cont'd)

20.3 Ethernet Private Line #(Cont'd)

(H) Rates and Charges (Cont'd)

(2) On-Net Channel Mileage (Cont'd)

(a) **Protected** Channel Mileage (Cont'd)

(Jurisdiction: Illinois (C)
Indiana, Michigan, North Carolina, Ohio, (C)
South Carolina, and Wisconsin) (C)

(4) 7-year Commitment Period/Term Plan (Cont'd)

Interface Type	Monthly Rate Fixed	Monthly Rate Per Mile
1 Gbps Fibre Channel (Full Rate)		
Price Band A	$1,005.00	
Price Band B	1,005.00	
Price Band C	1,005.00	
N-MSA	1,005.00	
Price Band A		$324.00
Price Band B		324.00
Price Band C		324.00
N-MSA		324.00
1 Gbps FICON (Full Rate)		
Price Band A	1,005.00	
Price Band B	1,005.00	
Price Band C	1,005.00	
N-MSA	1,005.00	
Price Band A		324.00
Price Band B		324.00
Price Band C		324.00
N-MSA		324.00

Service availability limited. Refer to # footnote on Page 20-525.

© 2022 Frontier Communications Parent, Inc. All rights reserved

20. Ethernet Private Line (Cont'd)

20.3 Ethernet Private Line #Cont'd)

(H) Rates and Charges (Cont'd)

(2) On-Net Channel Mileage (Cont'd)

(a) **Protected** Channel Mileage (Cont'd)

(Jurisdiction: Illinois (C)
Indiana, Michigan, North Carolina, Ohio, (C)
South Carolina, and Wisconsin) (C)

(4) 7-year Commitment Period/Term Plan (Cont'd)

Interface Type	Monthly Rate Fixed	Monthly Rate Per Mile
(Mapped to SONET at one end)		
10 Mbps Ethernet (Full Rate) to STS1		
Price Band A	$ 80.00	
Price Band B	80.00	
Price Band C	80.00	
N-MSA	80.00	
Price Band A		$48.00
Price Band B		48.00
Price Band C		48.00
N-MSA		48.00
100 Mbps Ethernet (50 Mbps) to STS1		
Price Band A	150.00	
Price Band B	150.00	
Price Band C	150.00	
N-MSA	150.00	
Price Band A		63.00
Price Band B		63.00
Price Band C		63.00
N-MSA		63.00
100 Mbps Ethernet (Full Rate) to OC3c		
Price Band A	220.00	
Price Band B	220.00	
Price Band C	220.00	
N-MSA	220.00	
Price Band A		77.00
Price Band B		77.00
Price Band C		77.00
N-MSA		77.00

Service availability limited. Refer to # footnote on Page 20-525.

© 2022 Frontier Communications Parent, Inc. All rights reserved

20. Ethernet Private Line (Cont'd)

20.3 Ethernet Private Line #(Cont'd)

(H) Rates and Charges (Cont'd)

(2) On-Net Channel Mileage (Cont'd)

(a) **Protected** Channel Mileage (Cont'd)

(Jurisdiction: Illinois (C)
Indiana, Michigan, North Carolina, Ohio, (C)
South Carolina, and Wisconsin) (C)

(4) 7-year Commitment Period/Term Plan (Cont'd)

Interface Type	Monthly Rate Fixed	Monthly Rate Per Mile
(Mapped to SONET at one end) (Cont'd)		
1 Gbps Ethernet (50 Mbps) to OC3		
Price Band A	$ 150.00	
Price Band B	150.00	
Price Band C	150.00	
N-MSA	150.00	
Price Band A		$ 63.00
Price Band B		63.00
Price Band C		63.00
N-MSA		63.00
1 Gbps Ethernet (150 Mbps) to OC3		
Price Band A	275.00	
Price Band B	275.00	
Price Band C	275.00	
N-MSA	275.00	
Price Band A		100.00
Price Band B		100.00
Price Band C		100.00
N-MSA		100.00

Service availability limited. Refer to # footnote on Page 20-525.

© 2022 Frontier Communications Parent, Inc. All rights reserved

20. Ethernet Private Line (Cont'd)

20.3 Ethernet Private Line #(Cont'd)

(H) Rates and Charges (Cont'd)

(2) On-Net Channel Mileage (Cont'd)

(a) **Protected** Channel Mileage (Cont'd)

(Jurisdiction: Illinois (C)
Indiana, Michigan, North Carolina, Ohio, (C)
South Carolina, and Wisconsin) (C)

(4) 7-year Commitment Period/Term Plan (Cont'd)

Interface Type	Monthly Rate Fixed	Monthly Rate Per Mile
(Mapped to SONET at one end) (Cont'd)		
1 Gbps Ethernet (300 Mbps) to OC12		
Price Band A	$400.00	
Price Band B	400.00	
Price Band C	400.00	
N-MSA	400.00	
Price Band A		$137.00
Price Band B		137.00
Price Band C		137.00
N-MSA		137.00
1 Gbps Ethernet (450 Mbps) to OC12		
Price Band A	525.00	
Price Band B	525.00	
Price Band C	525.00	
N-MSA	525.00	
Price Band A		174.00
Price Band B		174.00
Price Band C		174.00
N-MSA		174.00

Service availability limited. Refer to # footnote on Page 20-525.

© 2022 Frontier Communications Parent, Inc. All rights reserved

20. Ethernet Private Line (Cont'd)

20.3 Ethernet Private Line #(Cont'd)

(H) Rates and Charges (Cont'd)

(2) On-Net Channel Mileage (Cont'd)

(a) **Protected** Channel Mileage (Cont'd)

(Jurisdiction: Illinois (C)
Indiana, Michigan, North Carolina, Ohio, (C)
South Carolina, and Wisconsin) (C)

(4) 7-year Commitment Period/Term Plan (Cont'd)

Interface Type	Monthly Rate Fixed	Monthly Rate Per Mile
(Mapped to SONET at one end) (Cont'd)		
1 Gbps Ethernet (600 Mbps) to OC12		
Price Band A	$650.00	
Price Band B	650.00	
Price Band C	650.00	
N-MSA	650.00	
Price Band A		$210.00
Price Band B		210.00
Price Band C		210.00
N-MSA		210.00
1 Gbps Ethernet (600 Mbps) to OC12c		
Price Band A	650.00	
Price Band B	650.00	
Price Band C	650.00	
N-MSA	650.00	
Price Band A		210.00
Price Band B		210.00
Price Band C		210.00
N-MSA		210.00

Service availability limited. Refer to # footnote on Page 20-525.

© 2022 Frontier Communications Parent, Inc. All rights reserved

20. Ethernet Private Line (Cont'd)

20.3 Ethernet Private Line #(Cont'd)

(H) Rates and Charges (Cont'd)

(2) On-Net Channel Mileage (Cont'd)

(a) **Protected** Channel Mileage (Cont'd)

(Jurisdiction: Illinois (C)
Indiana, Michigan, North Carolina, Ohio, (C)
South Carolina, and Wisconsin) (C)

(4) 7-year Commitment Period/Term Plan (Cont'd)

Interface Type	Monthly Rate Fixed	Monthly Rate Per Mile
(Mapped to SONET at one end) (Cont'd)		
1 Gbps Ethernet (Full Rate) to OC48		
Price Band A	$ 910.00	
Price Band B	910.00	
Price Band C	910.00	
N-MSA	910.00	
Price Band A		$294.00
Price Band B		294.00
Price Band C		294.00
N-MSA		294.00
1 Gbps Fibre Channel (Full Rate) to OC48		
Price Band A	1,005.00	
Price Band B	1,005.00	
Price Band C	1,005.00	
N-MSA	1,005.00	
Price Band A		324.00
Price Band B		324.00
Price Band C		324.00
N-MSA		324.00

Service availability limited. Refer to # footnote on Page 20-525.

© 2022 Frontier Communications Parent, Inc. All rights reserved

20. Ethernet Private Line (Cont'd)

20.3 Ethernet Private Line #(Cont'd)

(H) Rates and Charges (Cont'd)

(2) On-Net Channel Mileage (Cont'd)

(a) **Protected** Channel Mileage (Cont'd)

(Jurisdiction: Illinois (C)
Indiana, Michigan, North Carolina, Ohio, (C)
South Carolina, and Wisconsin) (C)

(4) 7-year Commitment Period/Term Plan (Cont'd)

Interface Type	Monthly Rate Fixed	Monthly Rate Per Mile
(Mapped to SONET at one end) (Cont'd)		
1 Gbps FICON Channel (Full Rate) to OC48*		
Price Band A	1,005.00	
Price Band B	1,005.00	
Price Band C	1,005.00	
N-MSA	1,005.00	
Price Band A		324.00
Price Band B		324.00
Price Band C		324.00
N-MSA		324.00

Service availability limited. Refer to # footnote on Page 20-525.

© 2022 Frontier Communications Parent, Inc. All rights reserved

20. Ethernet Private Line (Cont'd)

20.3 Ethernet Private Line #(Cont'd)

(H) Rates and Charges (Cont'd)

(3) Access Aggregation Ports

(Jurisdiction: Illinois (C)
Indiana, Michigan, North Carolina, Ohio, (C)
South Carolina, and Wisconsin) (C)

(1) 1-year Commitment Period/Term Plan

Interface Type	Monthly Rate	Nonrecurring Charge
OC3 (Supports Up to 3 Mapped STS1s)		
Price Band A	$ 50.00	$1.00
Price Band B	50.00	1.00
Price Band C	50.00	1.00
N-MSA	50.00	1.00
OC12 (Supports Up to 12 Mapped STS1s)		
Price Band A	100.00	1.00
Price Band B	100.00	1.00
Price Band C	100.00	1.00
N-MSA	100.00	1.00
OC48 (Supports Up to 48 Mapped STS1s)		
Price Band A	300.00	1.00
Price Band B	300.00	1.00
Price Band C	300.00	1.00
N-MSA	300.00	1.00

Service availability limited. Refer to # footnote on Page 20-525.

© 2022 Frontier Communications Parent, Inc. All rights reserved

20. Ethernet Private Line (Cont'd)

20.3 Ethernet Private Line #(Cont'd)

(H) Rates and Charges (Cont'd)

(3) Access Aggregation Ports (Cont'd)

(Jurisdiction: Illinois (C)
Indiana, Michigan, North Carolina, Ohio, (C)
South Carolina, and Wisconsin) (C)

(2) 3-year Commitment Period/Term Plan

Interface Type	Monthly Rate	Nonrecurring Charge
OC3 (Supports Up to 3 Mapped STS1s)		
Price Band A	$ 50.00	$1.00
Price Band B	50.00	1.00
Price Band C	50.00	1.00
N-MSA	50.00	1.00
OC12 (Supports Up to 12 Mapped STS1s)		
Price Band A	100.00	1.00
Price Band B	100.00	1.00
Price Band C	100.00	1.00
N-MSA	100.00	1.00
OC48 (Supports Up to 48 Mapped STS1s)		
Price Band A	300.00	1.00
Price Band B	300.00	1.00
Price Band C	300.00	1.00
N-MSA	300.00	1.00

Service availability limited. Refer to # footnote on Page 20-525.

© 2022 Frontier Communications Parent, Inc. All rights reserved

20. Ethernet Private Line (Cont'd)

20.3 Ethernet Private Line #(Cont'd)

(H) Rates and Charges (Cont'd)

(3) Access Aggregation Ports (Cont'd)

(Jurisdiction: Illinois (C)
Indiana, Michigan, North Carolina, Ohio, (C)
South Carolina, and Wisconsin) (C)

(3) 5-year Commitment Period/Term Plan

Interface Type	Monthly Rate	Nonrecurring Charge
OC3 (Supports Up to 3 Mapped STS1s)		
Price Band A	$ 50.00	$1.00
Price Band B	50.00	1.00
Price Band C	50.00	1.00
N-MSA	50.00	1.00
OC12 (Supports Up to 12 Mapped STS1s)		
Price Band A	100.00	1.00
Price Band B	100.00	1.00
Price Band C	100.00	1.00
N-MSA	100.00	1.00
OC48 (Supports Up to 48 Mapped STS1s)		
Price Band A	300.00	1.00
Price Band B	300.00	1.00
Price Band C	300.00	1.00
N-MSA	300.00	1.00

Service availability limited. Refer to # footnote on Page 20-525.

© 2022 Frontier Communications Parent, Inc. All rights reserved

20. Ethernet Private Line (Cont'd)

20.3 Ethernet Private Line #(Cont'd)

(H) Rates and Charges (Cont'd)

(3) Access Aggregation Ports (Cont'd)

(Jurisdiction: Illinois (C)
Indiana, Michigan, North Carolina, Ohio, (C)
South Carolina, and Wisconsin) (C)

(4) 7-year Commitment Period/Term Plan

Interface Type	Monthly Rate	Nonrecurring Charge
OC3 (Supports Up to 3 Mapped STS1s)		
Price Band A	$ 50.00	$1.00
Price Band B	50.00	1.00
Price Band C	50.00	1.00
N-MSA	50.00	1.00
OC12 (Supports Up to 12 Mapped STS1s)		
Price Band A	100.00	1.00
Price Band B	100.00	1.00
Price Band C	100.00	1.00
N-MSA	100.00	1.00
OC48 (Supports Up to 48 Mapped STS1s)		
Price Band A	300.00	1.00
Price Band B	300.00	1.00
Price Band C	300.00	1.00
N-MSA	300.00	1.00

Service availability limited. Refer to # footnote on Page 20-525.

© 2022 Frontier Communications Parent, Inc. All rights reserved

20. Ethernet Private Line (Cont'd)

20.4 Dedicated SONET Entrance Facilities

(A) General

Dedicated SONET Entrance Facilities (DSEF) provides high capacity DS3s with enhanced survivability between a Customer Designated Location (CDL) and the Serving Wire Center (SWC) of that CDL. DSEF is provisioned over the Telephone Company's shared SONET network that includes a self-healing ring that passes through the CDL, the SWC of that CDL, and another wire center as determined by the Telephone Company.

(B) DSEF Components

(1) DSEF consists of two basic service components:
- DSEF Terminations
- DSEF Interfaces

(a) DSEF Terminations

DSEF Terminations provide STS1 bandwidth between the CDL and the SWC of that CDL. The DSEF Terminations carry DS3 services and are delivered with enhanced survivability over the Telephone Company's self-healing SONET network. As a result, the Customer is assured continuity of communication for the DS3 service even if there is a fiber facility failure between the CDL and the SWC of that CDL.

(b) DSEF Interfaces

The DSEF Interface defines the engineering characteristics of the service hand-off at the CDL. The Customer must specify an electrical or optical interface for each DSEF Termination.

(i) Electrical Interface

The electrical DSEF Interface defines the type of service that is to be provided over the Telephone Company provided SONET network. The electrical interface type that is available is DS3 (44.736 Mbps).

The electrical DSEF Interface is used for connecting a DS3 service to an DSEF Termination at the CDL.

© 2022 Frontier Communications Parent, Inc. All rights reserved

20. Ethernet Private Line (Cont'd)

20.4 Dedicated SONET Entrance Facilities (Cont'd)

(B) DSEF Components (Cont'd)

(1) (Cont'd)

(b) DSEF Interfaces (Cont'd)

(ii) Optical Interface

The optical DSEF Interface defines the optical handoff at the CDL. The optical interface is used for DS3 services connecting to DSEF Terminations and being mapped to an optical interface at OC3, OC12, or OC48 bandwidth. For example, Customer has the option of connecting multiple DS3 services to DSEF Terminations and mapping multiple DS3 services to a single OC3 optical interface.

(2) A network diagram of an DSEF with DS3 electrical interface and OC3 and OC12 optical interfaces is illustrated below:

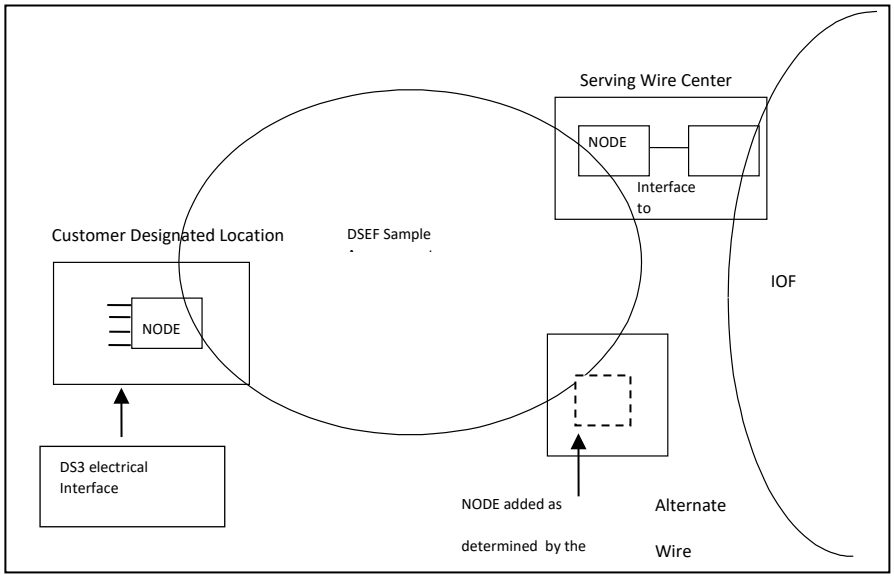

© 2022 Frontier Communications Parent, Inc. All rights reserved

20. Ethernet Private Line (Cont'd)

20.4 Dedicated SONET Entrance Facilities Cont'd)

(B) DSEF Components (Cont'd)

(3) A network diagram of the DSEF with an OC48 optical interface is illustrated below:

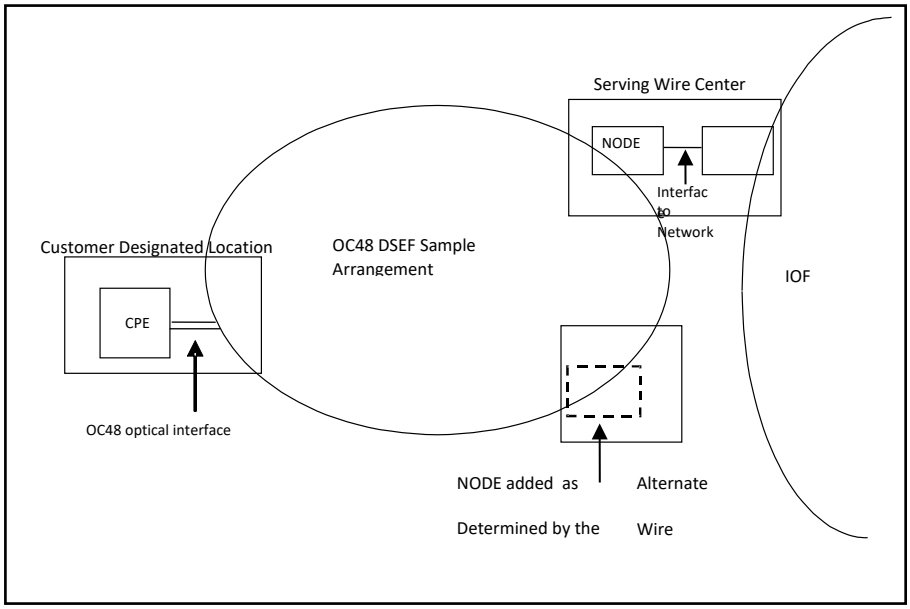

(C) Technical Specifications

Technical specifications for DSEF are set forth in Technical Reference GR-253-CORE, Issue 4.

© 2022 Frontier Communications Parent, Inc. All rights reserved

20. Ethernet Private Line (Cont'd)

20.4 Dedicated SONET Entrance Facilities (Cont'd)

(D) Terms and Conditions

(1) Deployment and Availability

(a) DSEF is provided where SONET facilities and bandwidth are available to provide the requested DSEF Interface. The Telephone Company will work cooperatively with the Customer in determining the availability of such facilities and if service can be provided.

(b) DSEF is available based on negotiated intervals, as described in Section 3.2.1 preceding.

(c) Regulations for moves or rearrangements of DS3s are described in Sections 5.6.4 and 5.6.1 preceding, respectively.

(2) Service Limitations

If the CDL is located in the same building as the SWC, the diversity between the SWC and the CDL may be limited by the physical paths available to connect the SWC and the CDL, and there may not be fiber diversity routed through an alternate wire center.

(3) Connection to Other Services

(a) Connection of DS3 Services to DSEF Terminations is provided by the Telephone Company. Interoffice mileage, when applicable, will apply at Special Transport rates, as set forth in Section 5.7.14 preceding, for the appropriate DS3 service being transported over the interoffice facilities

Asynchronous multiplexing of DS1s into a DS3 occurs outside the DSEF and all terms and rates as set forth in Section 5.7 preceding are applicable for such multiplexing.

(b) DSEF may also be connected to the following Telephone Company provided services, where such connections are technically and operationally feasible, as determined by the Telephone Company.

- ethernet private line service
- point-to-point SONET service

© 2022 Frontier Communications Parent, Inc. All rights reserved

20. Ethernet Private Line (Cont'd)

20.4 Dedicated SONET Entrance Facilities (Cont'd)

Terms and Conditions (Cont'd)

(4) Space and Power

The Customer will be billed additional charges for any charges levied on the Telephone Company for space and power required to place equipment on the Telephone Company's side of the network interface.

(5) Conversions

Customers who wish to convert existing DS1 and lower bandwidth special access services to an DSEF may do so without termination liability as long as the total capacity of converted services at the CDL does not decrease. A new commitment period commences with the conversion and no credit is given for time-in-service on the new term plan. Applicable nonrecurring charges for installations will apply.

(E) Application of Rates and Charges

(1) Rate Structure

(a) DSEF Terminations

Monthly recurring charges (MRCs) apply for DSEF Terminations. The MRCs are differentiated by the term plan and DSEF Interface selected by the Customer. Nonrecurring charges apply for installations of DSEF Terminations.

Additionally, the MRCs for DSEF Terminations apply on a tapered schedule basis as set forth in (F) following. The rate to be billed for each DSEF Termination is based on the total number of DSEF Terminations that are in-service as of each billing date, on a per CDL basis, and per Billing Account Number (BAN) basis. To determine the total number of DSEF Terminations, the Telephone Company will count all DSEF Terminations and Telephone Company provided SONET entrance facilities provided in connection with a Telephone Company provided point-to-point SONET service or ethernet private line service that terminate at such CDL that are in service and billed under the same BAN.

For example, a Customer purchases five (5) DSEFs that are in-service at three (3) different CDLs, with the 5 DSEFs being billed under two (2) different BANs.

(i) The first CDL has two (2) DSEFs, one with fifteen (15) in-service STS1 DSEF Terminations and the other with 5 in-service STS1 DSEF Terminations for a total of twenty (20) STS1 DSEF Terminations. Both DSEFs are under the same BAN. The rate to be billed for each DSEF Termination in the 2 DSEFs at the first CDL is the rate shown for 20 STS1 DSEF Terminations, as set forth in (F) following.

© 2022 Frontier Communications Parent, Inc. All rights reserved

20. Ethernet Private Line (Cont'd)

20.4 Dedicated SONET Entrance Facilities (Cont'd)

(E) Application of Rates and Charges (Cont'd)

(1) Rate Structure (Cont'd)

(a) DSEF Terminations (Cont'd)

(ii) The second CDL has two (2) DSEFs, one with twenty (20) in-service STS1 DSEF Terminations and the other with twenty-two (22) in-service STS1 DSEF Terminations, for a total of forty-two (42) STS1 DSEF Terminations. The DSEFs at the second CDL are under separate BANs. The rate to be billed for each DSEF Termination in the first DSEF is the rate shown for 20 STS1 DSEF Terminations. The rate to be billed for each DSEF Termination in the second DSEF is the rate shown for 22 STS1 DSEF Terminations, as set forth in (F) following.

(iii) The third CDL has one (1) DSEF with nine (9) in-service STS1 DSEF Terminations on the same BAN. The rate to be billed for each DSEF Termination on the DSEF is the rate shown for 9 STS1 DSEF Terminations, as set forth in (F) following.

(b) DSEF Interfaces

MRCs for electrical DSEF Interfaces shall apply as set forth in (F)(2) following. When a customer orders an DSEF with a STS1 termination and an electrical interface, both the MRC for electrical DSEF interface (as set forth in (F)(2) following), and the MRC for STS1 Termination (as set forth in (F)(1) following) shall apply. The MRCs are differentiated by the term plan selected by the Customer. Nonrecurring charges apply for installations of electrical DSEF Interfaces, as set forth in (F)(3) following

(2) Term Plans

DSEF is available for term plans of three (3) year and five (5) year commitment periods.

© 2022 Frontier Communications Parent, Inc. All rights reserved

20. Ethernet Private Line (Cont'd)

20.4 Dedicated SONET Entrance Facilities (Cont'd)

(E) Application of Rates and Charges (Cont'd)

(3) Connection to Other Services

When a Customer connects an DSEF Termination to a DS3 service under a one (1) year commitment period, the DSEF Termination and Interface will be provided under a three (3) year commitment period.

When a Customer connects an DSEF Termination to a DS3 service under a three (3) year or five (5) year commitment period, the DSEF Termination and Interface will be provided under the same length commitment period.

When a Customer connects an DSEF Termination to a DS3 service under a seven (7) year commitment period, the DSEF Termination and Interface will be provided under a five (5) year commitment period.

(4) Expiration of Commitment Period

Upon expiration of the term plan, the Telephone Company will continue to provide DSEF on a month-to-month basis under the same rates, terms and conditions of the current term plan until the earliest to occur of: (a) the Customer cancels service or (b) a valid order for a new term plan is requested by the Customer.

(5) Termination Liability

(a) A Customer must fulfill the term plan for each DSEF Termination and Interface, or be subject to termination liability for each DSEF Termination and Interface that was not in service for the entire commitment period. If a Customer disconnects service during the first year, termination liability will be calculated at one hundred percent (100%) of the MRCs for the unexpired portion of the first year, and at fifteen percent (15%) for the remainder of the term. If the disconnection takes place after the first year, termination liability is calculated at 15% of the MRCs for the remainder of the term.

(b) Termination liability will not apply to DSEF when:

(i) Reserved for future use (C)

(ii) a Customer changes its term plan to a longer commitment period and the CDL does not change.

© 2024 Frontier Communications Parent, Inc. All rights reserved

20. Ethernet Private Line (Cont'd)

20.4 Dedicated SONET Entrance Facilities (Cont'd)

(F) Rates and Charges

(1) DSEF Terminations

(Jurisdiction: Illinois, Indiana, Michigan, (C)
North Carolina, Ohio, South Carolina, and Wisconsin) (C)

(a) Per STS1/51.84 Mbps DSEF Termination
With a DS3 Electrical Interface
Per **Price Cap/N-MSA**

Special Switched	Monthly Rate 3 Year Term	Monthly Rate 5 Year Term
1	$2,150.00	$1,800.00
2	2,100.00	1,600.00
3	1,700.00	1,500.00
4	1,175.00	1,100.00
5	1,000.00	890.00
6	783.00	750.00
7	699.00	640.00
8	636.00	560.00
9	588.00	500.00
10	548.00	440.00
11	516.00	395.00
12	489.00	365.00
13	480.00	362.00
14	477.00	358.00
15	475.00	355.00
16	472.00	353.00
17	470.00	350.00
18	467.00	348.00
19	465.00	345.00
20	462.00	340.00
21	459.00	338.00
22	456.00	336.00
23	454.00	333.00
24	451.00	331.00

.

© 2022 Frontier Communications Parent, Inc. All rights reserved

20. Ethernet Private Line (Cont'd)

20.4 Dedicated SONET Entrance Facilities (Cont'd)

(F) Rates and Charges (Cont'd)

(1) DSEF Terminations (Cont'd)

(Jurisdiction: Illinois, Indiana, Michigan, (C)
North Carolina, Ohio, South Carolina, and Wisconsin) (C)

(a) Per STS1/51.84 Mbps DSEF Termination
With a DS3 Electrical Interface (Cont'd)
Per **Price Cap/N-MSA**

	Monthly Rate 3 Year Term	Monthly Rate 5 Year Term
Special Switched		
25	$449.00	$329.00
26	446.00	327.00
27	444.00	325.00
28	441.00	323.00
29	438.00	321.00
30	435.00	319.00
31	433.00	317.00
32	430.00	315.00
33	428.00	312.00
34	425.00	310.00
35	423.00	308.00
36	420.00	306.00
37	407.00	304.00
38	404.00	302.00
39	402.00	298.00
40	399.00	294.00
41	396.00	288.00
42	393.00	283.00
43	391.00	278.00
44	388.00	273.00
45	386.00	267.00
46	383.00	262.00
47	381.00	257.00
48 and up	378.00	252.00

© 2022 Frontier Communications Parent, Inc. All rights reserved

20. Ethernet Private Line (Cont'd)

20.4 Dedicated SONET Entrance Facilities (Cont'd)

(F) Rates and Charges (Cont'd)

(1) DSEF Terminations (Cont'd)

(Jurisdiction: Illinois, Indiana, (C)
North Carolina, and Ohio) (C)

(a) Per STS1/51.84 Mbps DSEF Termination
With a DS3 Electrical Interface (Cont'd)
Per **Price Band A, Price Band B, and Price Band C**

Special Switched	Monthly Rate 3 Year Term	Monthly Rate 5 Year Term
1	$2,150.00	$1,800.00
2	2,100.00	1,600.00
3	1,700.00	1,500.00
4	1,175.00	1,100.00
5	1,000.00	890.00
6	783.00	750.00
7	699.00	640.00
8	636.00	560.00
9	588.00	500.00
10	548.00	440.00
11	516.00	395.00
12	489.00	365.00
13	480.00	362.00
14	477.00	358.00
15	475.00	355.00
16	472.00	353.00
17	470.00	350.00
18	467.00	348.00
19	465.00	345.00
20	462.00	340.00
21	459.00	338.00
22	456.00	336.00
23	454.00	333.00
24	451.00	331.00

© 2022 Frontier Communications Parent, Inc. All rights reserved

20. Ethernet Private Line (Cont'd)

20.4 Dedicated SONET Entrance Facilities (Cont'd)

(F) Rates and Charges (Cont'd)

(1) DSEF Terminations (Cont'd)

(Jurisdiction: Illinois, Indiana, (C)
North Carolina, and Ohio) (C)

(a) Per STS1/51.84 Mbps DSEF Termination
With a DS3 Electrical Interface (Cont'd)
Per **Price Band A, Price Band B, and Price Band C**

	Monthly Rate 3 Year Term	Monthly Rate 5 Year Term
Special Switched		
25	$449.00	$329.00
26	446.00	327.00
27	444.00	325.00
28	441.00	323.00
29	438.00	321.00
30	435.00	319.00
31	433.00	317.00
32	430.00	315.00
33	428.00	312.00
34	425.00	310.00
35	423.00	308.00
36	420.00	306.00
37	407.00	304.00
38	404.00	302.00
39	402.00	298.00
40	399.00	294.00
41	396.00	288.00
42	393.00	283.00
43	391.00	278.00
44	388.00	273.00
45	386.00	267.00
46	383.00	262.00
47	381.00	257.00
48 and up	378.00	252.00

© 2022 Frontier Communications Parent, Inc. All rights reserved

20. Ethernet Private Line (Cont'd)

20.4 Dedicated SONET Entrance Facilities (Cont'd)

(F) Rates and Charges (Cont'd)

(1) DSEF Terminations (Cont'd)

(Jurisdiction: Illinois, Indiana, Michigan, (C)
North Carolina, Ohio, South Carolina, and Wisconsin) (C)

(b) Per STS1/51.84 Mbps DSEF Termination
With an OC3 Optical Interface
Per **Price Cap/N-MSA**

Special Switched	Monthly Rate 3 Year Term	Monthly Rate 5 Year Term
1	$2,310.00	$1,905.00
2	2,260.00	1,705.00
3	1,860.00	1,605.00
4	1,335.00	1,205.00
5	1,175.00	855.00
6	971.00	690.00
7	891.00	633.00
8	831.00	590.00
9	785.00	557.00
10	747.00	530.00
11	717.00	508.00
12	691.00	490.00
13	683.00	488.00
14	680.00	486.00
15	678.00	484.00
16	675.00	482.00
17	673.00	480.00
18	670.00	478.00
19	668.00	476.00
20	665.00	474.00
21	663.00	472.00
22	660.00	470.00
23	658.00	468.00
24	655.00	466.00

© 2022 Frontier Communications Parent, Inc. All rights reserved

20. Ethernet Private Line (Cont'd)

20.4 Dedicated SONET Entrance Facilities (Cont'd)

(F) Rates and Charges (Cont'd)

(1) DSEF Terminations (Cont'd)

(Jurisdiction: Illinois, Indiana, Michigan, (C)
North Carolina, Ohio, South Carolina, and Wisconsin) (C)

(b) Per STS1/51.84 Mbps DSEF Termination
With an OC3 Optical Interface (Cont'd)
Per **Price Cap/N-MSA**

Special Switched	Monthly Rate 3 Year Term	Monthly Rate 5 Year Term
25	$653.00	$464.00
26	650.00	462.00
27	648.00	460.00
28	645.00	458.00
29	643.00	456.00
30	640.00	454.00
31	638.00	452.00
32	635.00	450.00
33	633.00	448.00
34	630.00	446.00
35	628.00	444.00
36	625.00	442.00
37	613.00	440.00
38	610.00	438.00
39	608.00	434.00
40	605.00	430.00
41	603.00	425.00
42	600.00	420.00
43	598.00	415.00
44	595.00	410.00
45	593.00	405.00
46	590.00	400.00
47	588.00	395.00
48 and up	585.00	390.00

© 2022 Frontier Communications Parent, Inc. All rights reserved

20. Ethernet Private Line (Cont'd)

20.4 Dedicated SONET Entrance Facilities (Cont'd)

(F) Rates and Charges (Cont'd)

(1) DSEF Terminations (Cont'd)

(Jurisdiction: Illinois, Indiana, (C)
North Carolina and Ohio) (C)

(b) Per STS1/51.84 Mbps DSEF Termination
With an OC3 Optical Interface
Per **Price Band A, Price Band B, and Price Band C**

Special Switched	Monthly Rate 3 Year Term	Monthly Rate 5 Year Term
1	$2,310.00	$1,905.00
2	2,260.00	1,705.00
3	1,860.00	1,605.00
4	1,335.00	1,205.00
5	1,175.00	855.00
6	971.00	690.00
7	891.00	633.00
8	831.00	590.00
9	785.00	557.00
10	747.00	530.00
11	717.00	508.00
12	691.00	490.00
13	683.00	488.00
14	680.00	486.00
15	678.00	484.00
16	675.00	482.00
17	673.00	480.00
18	670.00	478.00
19	668.00	476.00
20	665.00	474.00
21	663.00	472.00
22	660.00	470.00
23	658.00	468.00
24	655.00	466.00

© 2022 Frontier Communications Parent, Inc. All rights reserved

20. Ethernet Private Line (Cont'd)

20.4 Dedicated SONET Entrance Facilities (Cont'd)

(F) Rates and Charges (Cont'd)

(1) DSEF Terminations (Cont'd)

(Jurisdiction: Illinois, Indiana, (C)
North Carolina and Ohio) (C)

(b) Per STS1/51.84 Mbps DSEF Termination
With an OC3 Optical Interface (Cont'd)
Per **Price Band A, Price Band B, and Price Band C**

	Monthly Rate 3 Year Term	Monthly Rate 5 Year Term
Special Switched		
25	$653.00	$464.00
26	650.00	462.00
27	648.00	460.00
28	645.00	458.00
29	643.00	456.00
30	640.00	454.00
31	638.00	452.00
32	635.00	450.00
33	633.00	448.00
34	630.00	446.00
35	628.00	444.00
36	625.00	442.00
37	613.00	440.00
38	610.00	438.00
39	608.00	434.00
40	605.00	430.00
41	603.00	425.00
42	600.00	420.00
43	598.00	415.00
44	595.00	410.00
45	593.00	405.00
46	590.00	400.00
47	588.00	395.00
48 and up	585.00	390.00

© 2022 Frontier Communications Parent, Inc. All rights reserved

20. Ethernet Private Line (Cont'd)

20.4 Dedicated SONET Entrance Facilities (Cont'd)

(F) Rates and Charges (Cont'd)

(1) DSEF Terminations (Cont'd)

(Jurisdiction: Illinois, Indiana, Michigan, (C)
North Carolina, Ohio, South Carolina, and Wisconsin) (C)

(c) Per STS1/51.84 Mbps DSEF Termination
With an OC12 Optical Interface
Per **Price Cap/N-MSA**

	Monthly Rate 3 Year Term	Monthly Rate 5 Year Term
Special Switched		
1	$2,310.00	$1,905.00
2	2,260.00	1,705.00
3	1,860.00	1,605.00
4	1,335.00	1,205.00
5	1,175.00	970.00
6	896.00	855.00
7	816.00	745.00
8	756.00	665.00
9	710.00	605.00
10	672.00	545.00
11	642.00	500.00
12	616.00	470.00
13	608.00	465.00
14	605.00	455.00
15	603.00	450.00
16	600.00	445.00
17	598.00	440.00
18	595.00	435.00
19	593.00	430.00
20	590.00	424.00
21	588.00	422.00
22	585.00	420.00
23	583.00	418.00
24	580.00	416.00

© 2022 Frontier Communications Parent, Inc. All rights reserved

20. Ethernet Private Line (Cont'd)

20.4 Dedicated SONET Entrance Facilities (Cont'd)

(F) Rates and Charges (Cont'd)

(1) DSEF Terminations (Cont'd)

(Jurisdiction: Illinois, Indiana, Michigan, (C)
North Carolina, Ohio, South Carolina and Wisconsin) (C)

(c) Per STS1/51.84 Mbps DSEF Termination
With an OC12 Optical Interface (Cont'd)
Per **Price Cap/N-MSA**

	Monthly Rate 3 Year Term	Monthly Rate 5 Year Term
Special Switched		
25	$578.00	$414.00
26	575.00	412.00
27	573.00	410.00
28	570.00	408.00
29	568.00	406.00
30	565.00	404.00
31	563.00	402.00
32	560.00	400.00
33	558.00	398.00
34	555.00	396.00
35	553.00	394.00
36	550.00	392.00
37	538.00	390.00
38	535.00	388.00
39	533.00	384.00
40	530.00	380.00
41	528.00	375.00
42	525.00	370.00
43	523.00	365.00
44	520.00	360.00
45	518.00	355.00
46	515.00	350.00
47	513.00	345.00
48 and up	510.00	340.00

© 2022 Frontier Communications Parent, Inc. All rights reserved

20. Ethernet Private Line (Cont'd)

20.4 Dedicated SONET Entrance Facilities (Cont'd)

(F) Rates and Charges (Cont'd)

(1) DSEF Terminations (Cont'd)

(Jurisdiction: Illinois, Indiana, (C)
North Carolina and Ohio) (C)

(c) Per STS1/51.84 Mbps DSEF Termination
With an OC12 Optical Interface
Per **Price Band A, Price Band B, and Price Band C**

	Monthly Rate 3 Year Term	Monthly Rate 5 Year Term
Special Switched		
1	$2,310.00	$1,905.00
2	2,260.00	1,705.00
3	1,860.00	1,605.00
4	1,335.00	1,205.00
5	1,175.00	970.00
6	896.00	855.00
7	816.00	745.00
8	756.00	665.00
9	710.00	605.00
10	672.00	545.00
11	642.00	500.00
12	616.00	470.00
13	608.00	465.00
14	605.00	455.00
15	603.00	450.00
16	600.00	445.00
17	598.00	440.00
18	595.00	435.00
19	593.00	430.00
20	590.00	424.00
21	588.00	422.00
22	585.00	420.00
23	583.00	418.00
24	580.00	416.00

© 2022 Frontier Communications Parent, Inc. All rights reserved

20. Ethernet Private Line (Cont'd)

20.4 Dedicated SONET Entrance Facilities (Cont'd)

(F) Rates and Charges (Cont'd)

(1) DSEF Terminations (Cont'd)

(Jurisdiction: Illinois, Indiana, (C)
North Carolina and Ohio) (C)

(c) Per STS1/51.84 Mbps DSEF Termination
With an OC12 Optical Interface (Cont'd)
Per **Price Band A, Price Band B, and Price Band C**

	Monthly Rate 3 Year Term	Monthly Rate 5 Year Term
Special Switched		
25	$578.00	$414.00
26	575.00	412.00
27	573.00	410.00
28	570.00	408.00
29	568.00	406.00
30	565.00	404.00
31	563.00	402.00
32	560.00	400.00
33	558.00	398.00
34	555.00	396.00
35	553.00	394.00
36	550.00	392.00
37	538.00	390.00
38	535.00	388.00
39	533.00	384.00
40	530.00	380.00
41	528.00	375.00
42	525.00	370.00
43	523.00	365.00
44	520.00	360.00
45	518.00	355.00
46	515.00	350.00
47	513.00	345.00
48 and up	510.00	340.00

© 2022 Frontier Communications Parent, Inc. All rights reserved

20. Ethernet Private Line (Cont'd)

20.4 Dedicated SONET Entrance Facilities (Cont'd)

(F) Rates and Charges (Cont'd)

(1) DSEF Terminations (Cont'd)

(Jurisdiction: Illinois, Indiana, Michigan, (C)
North Carolina, Ohio, South Carolina, and Wisconsin) (C)

(d) Per STS1/51.84 Mbps DSEF Termination
With an OC48 Optical Interface
Per **Price Cap/N-MSA**

Special Switched	Monthly Rate 3 Year Term	Monthly Rate 5 Year Term
1	$6,288.00	$4,488.00
2	3,144.00	2,244.00
3	2,096.00	1,496.00
4	1,572.00	1,122.00
5	1,258.00	898.00
6	1,048.00	748.00
7	898.00	641.00
8	786.00	561.00
9	699.00	499.00
10	629.00	449.00
11	572.00	408.00
12	524.00	343.33
13	517.00	342.41
14	515.00	340.58
15	513.00	338.74
16	510.00	337.82
17	509.00	335.99
18	506.00	334.15
19	505.00	333.23
20	502.00	331.40
21	500.00	329.56
22	498.00	327.73
23	496.00	326.81
24	493.00	324.97

© 2022 Frontier Communications Parent, Inc. All rights reserved

20. Ethernet Private Line (Cont'd)

20.4 Dedicated SONET Entrance Facilities (Cont'd)

(F) Rates and Charges (Cont'd)

(1) DSEF Terminations (Cont'd)

(Jurisdiction: Illinois, Indiana, Michigan, (C)
North Carolina, Ohio, South Carolina, and Wisconsin) (C)

(d) Per STS1/51.84 Mbps DSEF Termination
With an OC48 Optical Interface (Cont'd)
Per **Price Cap/N-MSA**

	Monthly Rate 3 Year Term	Monthly Rate 5 Year Term
Special Switched		
25	$492.00	$323.14
26	489.00	322.22
27	488.00	320.38
28	485.00	318.55
29	483.00	317.63
30	481.00	315.79
31	479.00	313.96
32	476.00	312.12
33	475.00	311.20
34	472.00	309.37
35	471.00	307.53
36	468.00	306.61
37	458.00	304.78
38	455.00	302.94
39	454.00	300.19
40	451.00	296.51
41	449.00	292.84
42	447.00	289.17
43	445.00	285.50
44	442.00	280.91
45	441.00	277.24
46	438.00	273.56
47	437.00	269.89
48 and up	434.00	265.30

© 2022 Frontier Communications Parent, Inc. All rights reserved

20. Ethernet Private Line (Cont'd)

20.4 Dedicated SONET Entrance Facilities (Cont'd)

(F) Rates and Charges (Cont'd)

(1) DSEF Terminations (Cont'd)

(Jurisdiction: Illinois, Indiana, (C)
North Carolina and Ohio) (C)

(d) Per STS1/51.84 Mbps DSEF Termination
With an OC48 Optical Interface
Per **Price Band A, Price Band B, and Price Band C**

Special Switched	Monthly Rate 3 Year Term	Monthly Rate 5 Year Term
1	$6,288.00	$4,488.00
2	3,144.00	2,244.00
3	2,096.00	1,496.00
4	1,572.00	1,122.00
5	1,258.00	898.00
6	1,048.00	748.00
7	898.00	641.00
8	786.00	561.00
9	699.00	499.00
10	629.00	449.00
11	572.00	408.00
12	524.00	343.33
13	517.00	342.41
14	515.00	340.58
15	513.00	338.74
16	510.00	337.82
17	509.00	335.99
18	506.00	334.15
19	505.00	333.23
20	502.00	331.40
21	500.00	329.56
22	498.00	327.73
23	496.00	326.81
24	493.00	324.97

© 2022 Frontier Communications Parent, Inc. All rights reserved

20. Ethernet Private Line (Cont'd)

20.4 Dedicated SONET Entrance Facilities (Cont'd)

(F) Rates and Charges (Cont'd)

(1) DSEF Terminations (Cont'd)

(Jurisdiction: Illinois, Indiana, (C)
North Carolina and Ohio) (C)

(d) Per STS1/51.84 Mbps DSEF Termination
With an OC48 Optical Interface (Cont'd)
Per **Price Band A, Price Band B, and Price Band C**

	Monthly Rate 3 Year Term	Monthly Rate 5 Year Term
Special Switched		
25	$492.00	$323.14
26	489.00	322.22
27	488.00	320.38
28	485.00	318.55
29	483.00	317.63
30	481.00	315.79
31	479.00	313.96
32	476.00	312.12
33	475.00	311.20
34	472.00	309.37
35	471.00	307.53
36	468.00	306.61
37	458.00	304.78
38	455.00	302.94
39	454.00	300.19
40	451.00	296.51
41	449.00	292.84
42	447.00	289.17
43	445.00	285.50
44	442.00	280.91
45	441.00	277.24
46	438.00	273.56
47	437.00	269.89
48 and up	434.00	265.30

© 2022 Frontier Communications Parent, Inc. All rights reserved

20. Ethernet Private Line (Cont'd)

20.4 Dedicated SONET Entrance Facilities (Cont'd)

(F) Rates and Charges (Cont'd)

(2) Electrical DSEF Interfaces

(a) DS3 Interface Monthly Recurring Charge

(Jurisdiction: Illinois, Indiana, Michigan, (C)
North Carolina, Ohio, South Carolina, and Wisconsin) (C)

	3-Year Term
N-MSA	$157.00

	5-Year Term
N-MSA	$105.00

(Jurisdiction: Illinois, Indiana, (C)
North Carolina and Ohio) (C)

	3-Year Term
Price Cap/N-MSA	$157.00
Price Band A	157.00
Price Band B	157.00
Price Band C	157.00

	5-Year Term
Price Cap/N-MSA	$105.00
Price Band A	105.00
Price Band B	105.00
Price Band C	105.00

© 2022 Frontier Communications Parent, Inc. All rights reserved

20. Ethernet Private Line (Cont'd)

20.4 Dedicated SONET Entrance Facilities (Cont'd)

(F) Rates and Charges (Cont'd)

(3) Installation Charges

(a) Per DSEF Termination

(Jurisdiction: Illinois, Indiana, Michigan, (C)
North Carolina, Ohio, South Carolina and Wisconsin) (C)

	Nonrecurring Charges
STS1 w/ separate Interface	
N-MSA	$1.00

(Jurisdiction: Illinois, Indiana, (C)
North Carolina and Ohio) (C)

	Nonrecurring Charges
STS1 w/ separate Interface	
Price Cap/N-MSA	$1.00
Price Band A	1.00
Price Band B	1.00
Price Band C	1.00

© 2022 Frontier Communications Parent, Inc. All rights reserved

20. Ethernet Private Line (Cont'd)

20.4 Dedicated SONET Entrance Facilities (Cont'd)

(F) Rates and Charges (Cont'd)

(3) Installation Charges (Cont'd)

(b) Per electrical DSEF Interface

(Jurisdiction: Illinois, Indiana, Michigan, (C)
North Carolina, Ohio, South Carolina, and Wisconsin) (C)

	3-Year Term Nonrecurring Charges
per electrical DSEF Interface - DS3	
N-MSA	$1.00

	5-Year Term Nonrecurring Charges
per electrical DSEF Interface - DS3	
N-MSA	$1.00

(Jurisdiction: Illinois, Indiana, (C)
North Carolina and Ohio) (C)

	3-Year Term Nonrecurring Charges
per electrical DSEF Interface - DS3	
Price Cap/N-MSA	$1.00
Price Band A	1.00
Price Band B	1.00
Price Band C	1.00

	5-Year Term Nonrecurring Charges
per electrical DSEF Interface - DS3	
Price Cap/N-MSA	$1.00
Price Band A	1.00
Price Band B	1.00
Price Band C	1.00

© 2022 Frontier Communications Parent, Inc. All rights reserved

21. RESERVED FOR FUTURE USE

© 2022 Frontier Communications Parent, Inc. All rights reserved

22. Operating Territories of the Frontier Telephone Companies

22.1 General

The operating territory of The Frontier Telephone Companies is comprised of the operating territories of Frontier Midstates Inc., Frontier North Inc., Frontier Communications of the Carolinas LLC and Citizens Telecommunications of California Inc. (C)

© 2022 Frontier Communications Parent, Inc. All rights reserved

22. Operating Territories of the Frontier Telephone Companies (Cont'd)

22.2 Operating Territory of Frontier Midstates Inc.

The operating territory of Frontier Midstates Inc., defined by the names of rate centers, is comprised of the following locations for Indiana and Michigan.

(A) Operating Territory of Indiana – (0831)

Cutler
Delphi
Idaville
Markle
Ossian
Reservoir
Uniondale
Zanesville

© 2022 Frontier Communications Parent, Inc. All rights reserved.

22. Operating Territories of the Frontier Telephone Companies (Cont'd)

22.2 Operating Territory of Frontier Inc. (Cont'd)

(B) Operating Territory of Michigan – (0681)

Addison
Alger
Baroda
Bridgman
Burlington
Fitchburg
Glenn
Gregory
Homer
Lacota
Lambertville
Lawrence
Lupton
Morenci
Munith
Onondaga
Parma
Prescott
Pullman
Rives Junction
Rose City
Sawyer
Sterling
Stockbridge
Tekonsha
Webberville

© 2022 Frontier Communications Parent, Inc. All rights reserved.

22. Operating Territories of the Frontier Telephone Companies (Cont'd)

22.3 Reserved

© 2022 Frontier Communications Parent, Inc. All rights reserved.

22. Operating Territories of the Frontier Telephone Companies (Cont'd)

22.4 Reserved

© 2022 Frontier Communications Parent, Inc. All rights reserved.

22. Operating Territories of the Frontier Telephone Companies (Cont'd)

22.5 Operating Territory of Frontier North Inc.

The operating territory of Frontier North Inc., defined by the names of rate centers, is comprised of the following locations for Illinois, Indiana, Michigan, Ohio, and Wisconsin.

(A) Operating Territory of Illinois – (1015)

Albion
Alexander
Allendale
Anna
Argenta
Ashkum
Astoria
Atlanta
Auburn
Ava
Barry
Baylis
Beaverville
Bellflower
Bellmont
Belvidere
Bement
Benson
Benton
Bethany
Bloomington
Bluffs
Bradford
Bridgeport
Brimfield
Broadlands
Brocton
Brookport
Buckley
Buda
Bureau
Burnt Prairie
Bushnell
Byron
Cabery
Camp Grove
Camp Point
Campus
Capron
Carbondale
Carlock
Carmi
Carriers Mills
Carrollton
Carterville
Castleton
Cerro Gordo
Chapin
Chatham
Chatsworth
Chebanse
Chenoa
Cherry Valley
Chester
Chillicothe
Chrisman
Christopher
Cisco
Claremont
Clay City
Clayton
Clifton
Clinton
Cobden
Colfax
Compton
Coulterville
Creal Springs
Cropsey
Cuba
Cypress
Dalton City
De Land
De Soto
Divernon
Dongola
Donovan
Donovan
Dover
Downs
Dunlap
Du Quoin
Earlville
Edelstein
Eldorado
Eldred
Elkhart
Elkville
Elliot
Ellis Grove
Ellsworth
Elmira
Elmwood
Elwin
Emington
Enfield
Eureka
Evansville
Ewing

© 2022 Frontier Communications Parent, Inc. All rights reserved.

22. Operating Territories of the Frontier Telephone Companies (Cont'd)

22.5 Operating Territory of Frontier North Inc. (Cont'd)

(A) Operating Territory of Illinois – (1015) (Cont'd)

Fairbury
Fairfield
Farmer City
Flora
Franklin
Garden Prairie
Girard
Golconda
Goreville
Grand Ridge
Grayville
Greenfield
Griggsville
Groveland
Hammond
Harrisburg
Hebron
Hennepin
Henry
Herrin
Heyworth
Highland
Hillview
Homer
Hopedale
Hudson
Hull
Hurst
Illiopolis
Jacksonville
Johnston City
Joppa
Karnak
Kenney
Kewanee
Ladd
La Moille
La Place
La Rose
Lawrenceville
Leland
Le Roy
Lexington
Lincoln
Literberry
Loami
Loda
Long Point
Lostant
Low Point
Mackinaw
Macomb
Macon
Magnolia
Mahomet
Manchester
Manlius
Mansfield
Marion
Marissa
Maroa
Marshall
Martinton
Maunie
McLean
McLeansboro
Melvin
Mendota
Meredosia
Metcalf
Metropolis
Middletown
Milton
Mineral
Minier
Minonk
Monticello
Morton
Mossville
Mount Carmel
Mount Sterling
Mount Zion
Murphysboro
Murrayville
Neponset
New Berlin
New Canton
New Milford
Newman
Newton
Niantic
Noble
Odell
Ohio
Olney
Oreana

© 2022 Frontier Communications Parent, Inc. All rights reserved.

22. Operating Territories of the Frontier Telephone Companies (Cont'd)

22.5 Operating Territory of Frontier North Inc. (Cont'd)

(A) Operating Territory of Illinois – (1015) (Cont'd)

Palmyra
Paris
Patterson
Paw Paw
Pawnee
Paxton
Pearl
Percy
Perry
Pinckneyville
Piper City
Pittsfield
Pleasant Hill
Pleasant Plains
Pontiac
Poplar Grove
Prairie City
Princeton
Reddick
Redmon
Princeville
Richmond
Ridgway
Roanoke
Roberts
Robinson
Rock Cut
Rockport
Rockton
Roodhouse
Roscoe
Rose Hill
Royalton
Rutland
Saint Francisvilla
Sandwich
Saybrook
Sesser
Shawneetown
Sheffield
Sheldon
Sheridan
Sherman
Shirland
Sibley
Sidell
Sidney
Somonauk
Sparland
Sparta
Spring Grove
Spring Valley
Stanford
Stelleville
Stillman Valley
Stonefort
Strawn
Streator
Sullivan
Sumner
Sunnyland
Thawville
Thompsonville
Tilden
Tiskilwa
Toluca
Toulon
Tremont
Tuscola
Ullin
Varna
Vermilion
Vermont
Versailles
Vienna
Villa Grove
Villa Ridge
Virden
Walnut
Warrensburg
Washburn
Washington
Waverly
Wayne City
Waynesville
Weldon
Wenona
West Brooklyn
West Frankfort
West Union
Westport
Westview
White Hall
Williamsville
Willow Hill
Winchester
Winnebago
Wonder Lake
Woodson
Wyanet
Wyoming
Zeigler

© 2022 Frontier Communications Parent, Inc. All rights reserved.

22. Operating Territories of the Frontier Telephone Companies (Cont'd)

22.5 Operating Territory of Frontier North Inc. (Cont'd)

(B) Operating Territory of Indiana – (0772)

Akron
Albion
Angola
Arlington
Atwood
Bippus
Blountsville
Bourbon
Brazil

Bristol
Brookville
Burket
Butler
Cambridge City
Carthage
Center Point
Centerville
Chestertown
Churubusco
Cicero
Clay City
Claypool
Connersville
Cory
Dunkirk
Dunlap
Elkhart

Farmland
Fort Wayne
Fountain City
Frankton
Fremont
Fulton
Galveston
Garrett
Glenwood

Goshen
Graysville
Greencastle
Greens Fork
Hagerstown
Hamilton
Hanna
Harlan
Hobart
Huntertown
Kimmell
Kouts
La Crosse
La Porte
Lafayette
Lake Station
Laurel
Leo
Lewis
Liberty
Logansport
Lucerne
Lynn
Macy
Mays
Mechanicsburg
Mentone
Middlebury
Millwood
Milroy
Modoc
Monroeville
Mooreland
Morristown
Morton
New Haven
North Manchester
Orland
Pendleton
Perkinsville

Pleasant Lake
Poe
Pokagon
Portage
Prairie Creek
Redkey
Richmond
Ridgeville
Riley

Roanoke
Rolling Prairie
Royal Center
Rushville
Saint Joe
Shirley
Sidney
Silver Lake
Spiceland
Springport
Sullivan
Terre Haute
Tippecanoe

Union Mills
Valparaiso
Wabash
Wakarusa
Walton
Wanatah
Waterloo
Wawaka
West College Corner
Westfield
Westville
Wheeler
Winchester
Windfall
Woodburn
Wyatt

© 2022 Frontier Communications Parent, Inc. All rights reserved.

22. Operating Territories of the Frontier Telephone Companies (Cont'd)

22.5 Operating Territory of Frontier North Inc. (Cont'd)

(C) Operating Territory of Michigan – (0695)

Adrian
Alden
Allegan
Alma
Almont
Alpena
Ashley
Atlanta
Avoca
Bancroft
Bangor
Barryton
Bath
Bellaire
Blissfield
Breckenridge
Britton
Bronson
Brown City
Burr Oak
Capac
Carson City
Caseville
Cass City
Cassopolis
Central Lake
Centreville
Clam River
Clifford
Clinton
Coldwater
Coldwater Lake
Colon
Columbiaville
Conklin
Constantine
Coopersville
Covert
Davison
De Witt
Decatur
Deckerville
Dowagiac
Dryden
Dundee
Durand
Eastport
Edmore
Edwardsburg
Elkton
Ellsworth
Elsie
Emmett
Erie
Fairview
Fennville
Fenwick
Fowler-Pewamo
Fruitport
Gaines
Ganges
Gaylord
Gobles
Goodells
Grand Junction
Grand Ledge
Grass Lake
Grayling
Hamilton
Harbor Beach
Harrisville
Hart
Hartford
Hemlock
Hesperia
Higgins Lake
Hillman
Holton
Houghton Lake
Howard City
Hubbardston
Hubbard Lake
Hudson
Ida
Imlay City
Ithaca
Jeddo
Kingston
Lachine
Laingsburg
Lakeview
Lawton
Lewiston
Lincoln
Linden
Long Lake
Lost Peninsula
Ludington
Maple Rapids
Marcellus
Mattawan
Maybee
McBride
Memphis
Mendon
Milford
Merrill
Metamora
Middleton
Milford
Minden City
Mio
Mount Pleasant
Muir
Muskegon
North Branch
Norton Sylvania

© 2022 Frontier Communications Parent, Inc. All rights reserved.

22. Operating Territories of the Frontier Telephone Companies (Cont'd)

22.5 Operating Territory of Frontier North Inc. (Cont'd)

(C) Operating Territory of Michigan – (0695) (Cont'd)

Onaway
Ortonville
Ossineke
Otisville
Ovid
Owosso
Palo
Paw Paw
Pentwater
Pompeii
Posen
Quincy
Rankin
Ravenna
Reading
Remus
Richmond
Riverdale
Rogers City
Roscommon
Saint Johns
Saint Louis
Saline
Saugatuck
Schoolcraft
Shelby
Shepherd
Sheridan
Sidney
Sister Lakes
Six Lakes
Smiths Creek
South Haven
Stanton
Stanwood
Sturgis
Swartz Creek
Tecumseh
Temperance
Three Rivers
Tipton
Torch River Bridge
Twin Lake
Union
Union City
Vandalia
Vanderbilt
Vestaburg
Weidman
White Pigeon
Whitehall
Williamston
Woodland
Yale

© 2022 Frontier Communications Parent, Inc. All rights reserved.

22. Operating Territories of the Frontier Telephone Companies (Cont'd)

22.5 Operating Territory of Frontier North Inc. (Cont'd)

Operating Territory of Ohio – (0615)

Adena
Albany
Amanda
Amesville
Amsterdam
Antwerp
Arlington - Hancock Co.
Ashland
Ashley
Ashville
Athens
Attica
Baltic
Baltimore
Barlow
Beaver
Bellevue
Bergholz
Berlin
Berlin Heights
Bettsville
Beverly
Blanchester
Bloomville
Bolivar
Bowerston
Bowling Green
Bremen
Brewster
Brilliant
Brookville
Brunswick
Bryan
Burbank
Byesville
Cadiz
Caldwell
Cambridge
Carey
Carrollton
Catawba
Celina
Chatham
Chauncey
Chesapeake
Cheshire
Circleville
Clarksville
Clyde
Coldwater
Congress
Convoy
Cooperdale
Crestline
Creston
Curtice-Oregon
Decatur
Delaware
Dellroy
Dexter City
Dillonvale - Mt. Pleasant
East Rochester
Edgerton
Edon
Elmore
Englewood
Evansport
Farmersville
Fayette
Felicity
Flushing
Forest
Fort Recovery
Freeport
Galion
Garrettsville
Genoa
Georgetown
Gibsonburg
Grafton
Grand Rapids
Gratis
Green Camp
Greenfield
Greenwich
Guysville
Hamersville
Hanoverton
Harlem Springs
Harpster
Haskins-Tontogany
Hayesville
Helena
Hicksville
Higginsport
Homerville
Homeworth
Huron
Idaho
Jackson
Jenera
Jewett
Kelleys Island
Kilbourne
Knoxville

© 2022 Frontier Communications Parent, Inc. All rights reserved.

22. Operating Territories of the Frontier Telephone Companies (Cont'd)

22.5 Operating Territory of Frontier North Inc. (Cont'd)

Operating Territory of Ohio – (0615) (Cont'd)

Lakeville
Larue
Laura
Laurelville
Leesburg
Letart Falls
Lewisburg
Liberty
Lodi
Logan
Loudonville
Lowell
Lower Salem
Lynchburg
Malvern
Manchester
Marblehead
Maria Stein
Marion
Martinsville
McArthur
McComb
Mechanicsburg
Mechanicstown
Medina
Mendon
Milan
MillerSport
Mineral City
Minerva
Minster
Monroeville
Montpelier
Montrose
Morning Sun
Morral
Mt. Blanchard
Mt. Orab
Mowrystown
Nevada
New Bremen
New Burlington
New Concord
New Lebanon
New London
New Marshfield
New Philadelphia
New Vienna
New Washington
Ney
North Baltimore
North Eaton
North Georgetown
North Star
Norwalk
Oak Harbor
Oak Hill
Oberlin
Ohio City
Ostrander
Otway
Oxford
Paris
Payne
Peebles
Pemberville
Perrysville (Ashland Co.)
Phillipsburg
Piketon
Pioneer
Plain City
Pleasant
Pleasantville
Plumwood
Plymouth
Polk
Pomeroy
Port Clinton
Port William
Portland
Portsmouth
Proctorville
Prospect
Put-in-Bay
Racine
Radnor
Rathbone
Rawson
Redhaw
Republic
Richmond
Richwood
Russellville
Rutland
Sabina
Saint Marys
Sardinia
Savannah
Scio
Sciotoville
Scott
Seaman
Seville
Shade
Sharon Center
Sinking Spring
Smithfield
South Webster
Spencer
Spencerville
St. Henry
St. Mary's
Strasburg
Sugarcreek
Summerfield
Sylvania
The Plains
Tiltonsville
Tipp City
Trotwood
Troy
Valley City
Van Buren

© 2022 Frontier Communications Parent, Inc. All rights reserved.

22. Operating Territories of the Frontier Telephone Companies (Cont'd)

22.5 Operating Territory of Frontier Northh Inc. (Cont'd)

Operating Territory of Ohio – (0615) (Cont'd)

Wadsworth
Wakeman
Waldo
Warsaw
Watertown
Waverly
Waynes-Bradner
Wellington
Wellston
West Alexandria
West Milton
West Portsmouth
West Salem
West Union
West Unity
Westfield
Weston
Wharton
Wilkesville
Willard
Williamsport
Willshire
Wilmington
Winona
Woodstock
Yorkshire

© 2022 Frontier Communications Parent, Inc. All rights reserved.

22. Operating Territories of the Frontier Telephone Companies (Cont'd)

22.5 Operating Territory of Frontier North Inc. (Cont'd)

(E) Reserved

© 2022 Frontier Communications Parent, Inc. All rights reserved.

22. Operating Territories of the Frontier Telephone Companies (Cont'd)

22.5 Operating Territory of Frontier North Inc. (Cont'd)

(F) Operating Territory of Wisconsin – (0886)

Adams
Allenton
Antigo
Arena
Athens
Baileys Harbor
Belgium
Belleville
Birnamwood
Bloom City
Briggsville
Brillion
Bristol
Brodhead
Brooklyn
Campbellsport
Cambridge
Cascade
Cedar Grove
Chilton
Clinton
Clyman
Cobb
Colby
Cottage Grove
Darien
Deerfield
Dodgeville
Eagle River
Eden
Edgar
Egg Harbor
Elkhart Lake
Greenbush
Hatley
Hilbert
Hollandale
Ithaca
Jacksonport
Johnsburg
Kewaskum
Kiel
Lac Du Flambeau
Lake Mills
Land O' Lakes
Lebanon
Lime Ridge
Lodi
Loganville
Lomira
Lone Rock
Loyal
Lyndon Station
Mapleton
Marathon
Marshall
Marshfield
Mattoon
Mauston
McFarland
Merrill
Merrimac
Mineral Point
Minocqua
Mishicot
Monroe Center
Montello
Mount Calvary
Neosho
New Holstein
Oakfield
Oostburg
Oregon
Owen
Pardeeville
Phelps
Pickerel
Plain
Plymouth
Portage
Random Lake
Reedsburg
Reedsville
Richland Center
Ridgeway
Saint Cloud
Salem
Sauk City
Sayner
Silver Lake
Sister Bay
Slinger
Spencer
Spring Green
Stratford
Sun Prairie
Theresa
Three Lakes
Tomahawk
Trevor
Twin Lakes
Two Rivers
Walworth
Washington Island
Waterloo
Waubeka
Wausau
Westfield
White Lake
Whitelaw
Wisconsin Dells
Witwen

© 2022 Frontier Communications Parent, Inc. All rights reserved.

22. Operating Territories of the Frontier Telephone Companies (Cont'd)

(D)

22.6 RESERVED

© 2022 Frontier Communications Parent, Inc. All rights reserved

22. Operating Territories of the Frontier Telephone Companies (Cont'd)

22.6 RESERVED (D)

© 2022 Frontier Communications Parent, Inc. All rights reserved

22. Operating Territories of the Frontier Telephone Companies (Cont'd)

22.6 RESERVED (D)

© 2022 Frontier Communications Parent, Inc. All rights reserved

22. Operating Territories of the Frontier Telephone Companies (Cont'd)

22.7 Operating Territory of Frontier Communications of the Carolinas LLC (C)

The operating territory of Frontier Communications of the Carolinas LLC, defined by the names of rate centers, is comprised of the following locations for Illinois, North Carolina, and South Carolina. (C)

(A) Operating Territory of Illinois – (1000)

Armstrong
Beason
Bondville
Casey
Cheneyville
Cissna Park
Collison
Congerville
Danforth
Deer Creek
East Lynn
Emden
Fisher-Dewey
Flatville
Foosland
Gifford
Goodfield
Greenup
Hartsburg
Hoopeston
Ivesdale
Kansas
Ludlow
Milford
Neoga
Ogden
Penfield
Pesotum
Philo
Potomac
Rankin
Rantoul
Royal
Sadorus
Secor
Seymour
Stockland
Thomasboro
Toledo
Tolono
Wellington
Westfield
Woodland

© 2022 Frontier Communications Parent, Inc. All rights reserved

22. Operating Territories of the Frontier Telephone Companies (Cont'd)

22.7 Operating Territory of Frontier Communications of the Carolinas LLC (Cont'd) (C)

(B) Operating Territory of North Carolina – (4334)

Altan
Creedmoor
Durham
Goose Creek
Monroe

© 2022 Frontier Communications Parent, Inc. All rights reserved

22. Operating Territories of the Frontier Telephone Companies (Cont'd)

22.7 Operating Territory of Frontier Communications of the Carolinas LLC (Cont'd) (C)

(C) Operating Territory of South Carolina – (4335)

Abbeville
Andrews
Bishopville
Calhoun Falls
Conway
Ehrhardt
Fairfax-Brunson
Georgetown
Hemingway
Hollywood
Johnsonville
Kingstree
Lake City
Lamar
Laurens
Manning
McCormick
Myrtle Beach
North Myrtle Beach
Olanta
Olar
Pamplico
Pawleys Island
Shaw AFB Heights
Summerton
Sumter
Walterboro
Winnsboro
Woodruff
Yemassee

Operating Territory of South Carolina – (0526)

Bowman
Elloree
Jackson
Santee
Simpson

© 2022 Frontier Communications Parent, Inc. All rights reserved

22. Operating Territories of the Frontier Telephone Companies (Cont'd)

22.8 Reserved

(A) Reserved

© 2022 Frontier Communications Parent, Inc. All rights reserved

22. Operating Territories of the Frontier Telephone Companies (Cont'd)

22.9 Operating Territory of Citizens Telecommunications Company of California, Inc. (C)

The operating territory of Citizens Telecommunications Company of California, Inc., defined by the names of rate centers, is comprised of the following locations for California. (C)

(A) Operating Territory of California – (2344)

This area is also referred to as "California-WC" in this Guide, indicating that this is the West Coast study area.

Crescent City
Gasquet
Hiouchi
Klamath
Orick
Smith River

© 2022 Frontier Communications Parent, Inc. All rights reserved

23. Reserved for Future Use

© 2022 Frontier Communications Parent, Inc. All rights reserved

24. SERVICE COMPONENTS

The Service Components offered in this Section 24 are for the exclusive use of customers for connecting to the interstate services provided by the Telephone Company as described in more detail herein.

24.1 Integrated Optical Service Riders*

24.1.1 General

(A) Telephone Company provided integrated optical service, which is provided where technically and operationally feasible as determined by the Telephone Company, provides a customer with a single network platform that is capable of converging SONET, Dense Wave Division Multiplexing, and Ethernet technologies.

(B) An Integrated Optical Service Rider is a service component provided under tariff that allows a lower level signal to be transported only between two points (nodes) on a Telephone Company provided integrated optical service.

(C) Integrated Optical Service Riders are provided in the following protocols:

(1) DS1 Special Access – for transmission of isochronous serial data at a rate of 1.544 Mbps.

(2) DS3 Special Access – for transmission of isochronous serial data at a rate of 44.736 Mbps.

Integrated Optical Service Riders are only available on a protected basis. A protected rider allows for a single signal from the customer to be duplicated and sent over separate diverse routes (working and protect).

24.1.2 Deployment and Availability

Integrated Optical Service Riders may only be added to an in-service Telephone Company provided integrated optical service. Integrated Optical Service Riders are provided based on negotiated intervals.

* All jurisdictions.

© 2022 Frontier Communications Parent, Inc. All rights reserved

24. SERVICE COMPONENTS (Cont'd)

24.1 Integrated Optical Service Riders * (Cont'd)

24.1.3 Connection to Other Services

(A) A High Capacity Special Access DS1/DS3 service may be connected to an in-service Telephone Company provided integrated optical service to be originated or terminated to an integrated optical service customer designated premises node via an Integrated Optical Service DS1/DS3 Rider.

(B) The High Capacity Special Access Service must be ordered with the same length Commitment Period as the Integrated Optical Service Rider.

(C) For purposes of administering the regulations and rates contained in this Guide, the portion of the High Capacity Special Access Service which is delivered over the Telephone Company provided integrated optical service is considered to be a High Capacity Special Access service, except as follows: Rates and charges for the High Capacity Special Access service are not applicable to the portion of the service which is delivered over the Telephone Company provided integrated optical service. Rates for the Integrated Optical Service Rider are applicable to the portion of the service which is delivered over the Telephone Company provided integrated optical service.

24.1.4 Responsibility of the Customer

All Integrated Optical Service Rider signals generated by CPE and delivered to the Telephone Company for multiplexing on to an integrated optical service must meet industry standards and specifications for the underlying protocol. The customer is responsible to perform any error detection and error correction of the data generated by its equipment. The Telephone Company assumes no responsibility for the quality of the signal generated by the customer or any CPE and will deliver the signal to the receiving location in the same format and condition as generated by the customer.

* All jurisdictions.

© 2022 Frontier Communications Parent, Inc. All rights reserved

24. SERVICE COMPONENTS (Cont'd)

24.1 Integrated Optical Service Riders * (Cont'd)

24.1.5 Conversions

(A) Customers who wish to convert both points of termination of an existing High Capacity Special Access Service to an Integrated Optical Service Rider may do so without termination liability as long as the capacity of the Integrated Optical Service Rider purchased by the customer is equal to or greater than the capacity of the converted High Capacity Special Access Service.

(B) Customers who wish to convert one point of termination of an existing High Capacity Special Access Service to an Integrated Optical Service Rider, as specified in Section 24.1.3 preceding, may do so without termination liability.

24.1.6 Application of Rates

(A) For each Integrated Optical Service Rider, monthly recurring rates apply at the ingress and egress locations (Appearances) on the integrated optical service. Two Appearances (one for ingress and one for egress) apply for an Integrated Optical Service Rider provided in a point-to-point (node-to-node) configuration.

(B) When a High Capacity Special Access Service is ordered to connect to a Telephone Company provided integrated optical service as specified in Section 24.1.3 preceding, the Integrated Optical Service Rider rates will be billed to the customer of record for the associated High Capacity Special Access service.

24.1.7 Term Plans

Integrated Optical Service Riders are available for term plan lengths of one (1) year, two (2) years, three (3) years, five (5) years, or seven (7) years (Commitment Periods).

* All jurisdictions.

© 2022 Frontier Communications Parent, Inc. All rights reserved

24. SERVICE COMPONENTS (Cont'd)

24.1 Integrated Optical Service Riders * (Cont'd)

24.1.8 Expiration of Commitment Period

Upon expiration of any Commitment Period, the Telephone Company will continue to provide Integrated Optical Service Riders on a month-to-month basis, under the prevailing rates of the current term plan, until the customer cancels service or requests a new term plan.

24.1.9 Termination Liability

(A) Integrated Optical Service Riders are subject to termination liability if service is disconnected prior to the end of the Commitment Period. Termination liability is calculated as follows:

(1) If the disconnection occurs during the first year of the Commitment Period, the Minimum Period obligation specified in 24.1.10 following applies for the unexpired portion of the first year. Termination liability is calculated at one hundred percent (100%) of the monthly recurring rates for the second year and twenty-five percent (25%) of the monthly recurring rates for the 25th month through the remainder of the Commitment Period, as applicable.

(2) If the disconnection occurs during the second year of the Commitment Period, termination liability is calculated at one hundred percent (100%) of the monthly recurring rates for the unexpired portion of the second year and twenty-five percent (25%) of the monthly recurring rates for the 25th month through the remainder of the Commitment Period, as applicable.

(3) If the disconnection occurs after the first two (2) years of the Commitment Period, termination liability is calculated at twenty-five (25%) of the monthly recurring rates from the date of disconnection through the remainder of the Commitment Period.

* All jurisdictions.

© 2022 Frontier Communications Parent, Inc. All rights reserved

24. SERVICE COMPONENTS (Cont'd)

24.1 Integrated Optical Service Riders * (Cont'd)

24.1.9 Termination Liability (Cont'd)

(B) Termination liability will not apply in the following situations:

(1) An Integrated Optical Service Rider is upgraded to a higher capacity Integrated Optical Service Rider (i.e., DS1 to DS3), and the following conditions are met:

(a) The new Integrated Optical Service Rider has an equal or longer Commitment Period than the existing Integrated Optical Service Rider; and

(b) All of the locations of the existing Integrated Optical Service Rider and new Integrated Optical Service Rider are the same.

The Customer remains responsible for satisfying any outstanding Minimum Period obligations.

(2) The customer cancels its term plan in order to establish a new term plan with a Commitment Period that is equal to, or longer than, the term plan being cancelled.

24.1.10 Minimum Period

(A) If an Integrated Optical Service Rider is disconnected during the Minimum Period, the customer shall pay to the Telephone Company one hundred percent (100%) of the monthly recurring rates from the date of disconnection through the end of the Minimum Period.

(B) Integrated Optical Service Riders are subject to a one (1) year Minimum Period.

* All jurisdictions.

© 2022 Frontier Communications Parent, Inc. All rights reserved

24. SERVICE COMPONENTS (Cont'd)

24.1 Integrated Optical Service Riders * (Cont'd)

24.1.11 Rates and Charges#

(A) Integrated Optical Service Riders

Protected
- Per Appearance

	Nonrecurring Charge	Monthly Recurring Rates
DS1		
1-Year Term		
Price Band A	$0.00	$75.00
Price Band B	0.00	75.00
Price Band C	0.00	75.00
N-MSA	0.00	75.00
2-Year Term		
Price Band A	0.00	75.00
Price Band B	0.00	75.00
Price Band C	0.00	75.00
N-MSA	0.00	75.00
3-Year Term		
Price Band A	0.00	75.00
Price Band B	0.00	75.00
Price Band C	0.00	75.00
N-MSA	0.00	75.00
5-Year Term		
Price Band A	0.00	75.00
Price Band B	0.00	75.00
Price Band C	0.00	75.00
N-MSA	0.00	75.00
7-Year Term		
Price Band A	0.00	75.00
Price Band B	0.00	75.00
Price Band C	0.00	75.00
N-MSA	0.00	75.00

* All jurisdictions.
#N-MSA Integrated Optical Service Riders Rates and Charges apply to all jurisdictions. Price Band Integrated Optical Service Riders Rates and Charges apply to the following jurisdictions: , Indiana, Illinois, North Carolina and Ohio
(C)

© 2022 Frontier Communications Parent, Inc. All rights reserved

24. SERVICE COMPONENTS (Cont'd)

24.1 Integrated Optical Service Riders * (Cont'd)

24.1.11 Rates and Charges# (Cont'd)

(A) Integrated Optical Service Riders (Cont'd)

Protected (Cont'd)
- Per Appearance

	Nonrecurring Charge	Monthly Recurring Rates
DS3		
1-Year Term		
Price Band A	0.00	$150.00
Price Band B	0.00	150.00
Price Band C	0.00	150.00
N-MSA	0.00	150.00
2-Year Term		
Price Band A	0.00	150.00
Price Band B	0.00	150.00
Price Band C	0.00	150.00
N-MSA	0.00	150.00
3-Year Term		
Price Band A	0.00	150.00
Price Band B	0.00	150.00
Price Band C	0.00	150.00
N-MSA	0.00	150.00
5-Year Term		
Price Band A	0.00	150.00
Price Band B	0.00	150.00
Price Band C	0.00	150.00
N-MSA	0.00	150.00
7-Year Term		
Price Band A	0.00	150.00
Price Band B	0.00	150.00
Price Band C	0.00	150.00
N-MSA	0.00	150.00

* All jurisdictions.
#N-MSA Integrated Optical Service Riders Rates and Charges apply to all jurisdictions.. Price Band Integrated Optical Service Riders Rates and Charges apply to the following jurisdictions: Indiana, Illinois, North Carolina and Ohio (C)

© 2022 Frontier Communications Parent, Inc. All rights reserved