ACCESS SERVICE

Interstate Service Guide
for Customers of Detariffed Access Services
within the operating territories
listed on the Title Pages

LEGAL NOTICE

The FRONTIER Interstate Service Guide and Pricelist (Guide) applies to the FRONTIER "Detariffed Services" (as defined below) and other telecommunications services that are set forth in this Guide.

Detariffed Services, as described in this document, are interstate special access services for which tariffs were withdrawn pursuant to FCC Report and Order, FCC 17-43, released April 28, 2017.

Beginning upon the effectiveness of the withdrawal of Detariffed Service tariffs, Detariffed Services will be subject to and provided pursuant to the rates, terms and conditions of this Guide, unless a separately executed service agreement between you and Frontier provides otherwise.

Prospective customers wishing to purchase services at the rates, terms and conditions in the Guide may do so by initiating orders through the same processes used to order services from FRONTIER's interstate access tariffs.

Service that is ordered without a separately executed service agreement between you and FRONTIER that applies to that order, will also be subject to the FRONTIER Interstate Access Service Agreement at https://wholesale.frontier.com/docs/wholesaledocs/frontier-interstate-access-service-agreement.pdf.

The services described in the Guide may be available through negotiated agreements, which may include rates, terms or conditions more favorable to you than those in the Guide. Prospective customers wishing to purchase Guide services at rates, terms or conditions different from those described in the Guide and the applicable FRONTIER Interstate Access Service Agreement may contact their FRONTIER service representative or go to the FRONTIER website at https://wholesale.frontier.com/wholesale/access-services/interstate-service-guide.

FRONTIER reserves the right to change the rates, terms and conditions in the Guide from time to time. Notification of Guide changes will be made available at the FRONTIER website.

DISCLAIMER: THIS DOCUMENTATION IS FOR INFORMATIONAL PURPOSES ONLY AND DOES NOT OBLIGATE FRONTIER TO PROVIDE SERVICES IN THE MANNER DESCRIBED IN THIS DOCUMENT. FRONTIER RESERVES THE RIGHT AS ITS SOLE OPTION TO MODIFY OR REVISE THE INFORMATION IN THIS DOCUMENT AT ANY TIME WITHOUT PRIOR NOTICE. IN NO EVENT SHALL FRONTIER OR ITS AGENTS, EMPLOYEES, DIRECTORS, OFFICERS, REPRESENTATIVES OR SUPPLIERS BE LIABLE UNDER CONTRACT, WARRANTY, TORT (INCLUDING BUT NOT LIMITED TO NEGLIGENCE OF FRONTIER), OR ANY OTHER LEGAL THEORY, FOR ANY DAMAGES ARISING FROM OR RELATING TO THIS DOCUMENT OR ITS CONTENTS, EVEN IF ADVISED OF THE POSSIBLITY OF SUCH DAMAGES.

© 2022 Frontier Communications Parent, Inc. All rights reserved.

ACCESS SERVICE

Regulations, Rates and Charges
applying to the provision of Access Services
for connection to interstate communications facilities
for customers within the operating territories of the
Frontier Telephone Companies
listed on Title Pages 2.

Access Services are provided by means of wire, fiber optics, radio or any other suitable technology or a combination thereof.

© 2022 Frontier Communications Parent, Inc. All rights reserved.

ACCESS SERVICE

ISSUING CARRIERS

All Regulations, Rates and Charges presented in this Guide are applicable to the following Issuing Carriers. Wire center locations for these Issuing Carriers are located in National Exchange Carrier Association Tariff FCC No. 4.

Frontier North Inc.
For the States of: Illinois
Indiana

Frontier Communications of the Carolinas LLC
For the State of: North Carolina

(D)
(D)

Frontier Communications of the Southwest Inc.
For the States of: California
Arizona
Nevada

The effective date for Frontier Telephone Companies INTERSTATE SERVICE GUIDE AND PRICELIST NO. 6 is November 1, 2018.

© 2021 Frontier Communications Parent, Inc. All rights reserved.

ACCESS SERVICE

TABLE OF CONTENTS

	Page No.
TABLE OF CONTENTS	1
CONCURRING CARRIERS	14
CONNECTING CARRIERS	14
OTHER PARTICIPATING CARRIERS	14
REGISTERED SERVICE MARKS	14
REGISTERED TRADEMARKS	14
EXPLANATION OF SYMBOLS	15
EXPLANATION OF ABBREVIATIONS	15
REFERENCE TO OTHER TARIFFS	18
REFERENCE TO OTHER PUBLICATIONS	18

© 2022 Frontier Communications Parent, Inc. All rights reserved.

ACCESS SERVICE

TABLE OF CONTENTS (Cont'd)

		Page No.
1.	**APPLICATION OF TARIFF**	1-1
2.	**GENERAL REGULATIONS**	2-1
2.1	**Undertaking of the Telephone Company**	2-1
2.1.1	Scope	2-1
2.1.2	Limitations	2-1
2.1.3	Liability	2-3
2.1.4	Provision of Services	2-5
2.1.5	Installation and Termination of Services	2-5
2.1.6	Maintenance of Services	2-5
2.1.7	Changes, Substitutions and Rearrangements	2-6
2.1.8	Refusal and Discontinuance of Service	2-7
2.1.9	Limitation of Use of Metallic Facilities	2-9
2.1.10	Notification of Service-Affecting Activities	2-9
2.1.11	Coordination with Respect to Network Contingencies	2-9
2.1.12	Provision and Ownership of Telephone Numbers	2-9
2.2	**Use**	2-10
2.2.1	Interference or Impairment	2-10
2.2.2	Unlawful Use	2-10
2.2.3	Commingling	2-10
2.3	**Obligations of the Customer**	2-11
2.3.1	Damages	2-11
2.3.2	Ownership of Facilities and Theft	2-11
2.3.3	Equipment Space and Power	2-11
2.3.4	Availability for Testing	2-12
2.3.5	Balance	2-12
2.3.6	Design of Customer Services	2-12
2.3.7	References to the Telephone Company	2-12
2.3.8	Claims and Demands for Damages	2-12
2.3.9	Coordination with Respect to Network Contingencies	2-13
2.3.10	Sectionalization and Trouble Reporting	2-13
2.4	**Payment Arrangements**	2-14
2.4.1	Payment of Rates, Charges and Deposits	2-14
2.4.2	Minimum Periods	2-21
2.4.3	Cancellation of an Order for Service	2-21
2.4.4	(Reserved for Future Use)	2-22

© 2022 Frontier Communications Parent, Inc. All rights reserved.

ACCESS SERVICE

TABLE OF CONTENTS (Cont'd)

RESERVED FOR FUTURE USE

© 2022 Frontier Communications Parent, Inc. All rights reserved.

TABLE OF CONTENTS (Cont'd)

		Page No.
3.	**RESERVED**	**3-1**
4.	**RESERVED**	**4-1**
5.	**ORDERING SPECIAL ACCESS SERVICE**	5-1
5.1	**Access Service Request Requirements**	5-1
5.1.1	General	5-1
5.1.2	RESERVED	5-2
5.1.3	Special Access Services	5-10
5.1.4	RESERVED	5-11
5.1.5	Equal Access Conversions	5-12
5.1.6	Provision of Other Services	5-13
5.1.7	Access Order Service Date Intervals	5-13
5.1.8	Selection of Facilities for Access Order	5-14
5.1.9	Shared Use Facilities	5-14
5.1.10	Expanded Interconnection Services (EIS)	5-15
5.1.11	Verizon Dedicated SONET Ring (DSR)	5-15
5.1.12	Special Construction	5-15
5.2	**Access Services Provided by More Than One Telephone Company**	5-16
5.3	**Access Order Charges**	5-18
5.3.1	Access Service Request Modifications	5-18
5.3.2	Cancellation of an Access Service Request	5-22
5.3.3	Minimum Period Charges	5-27

© 2022 Frontier Communications Parent, Inc. All rights reserved.

TABLE OF CONTENTS (Cont'd)

		Page No.
6.	**RESERVED**	6-1
7.	**SPECIAL ACCESS SERVICE**	7-1
7.1	**Provision of Special Access Service**	7-1
7.1.1	Circuit Types	7-1
7.1.2	Service Configurations	7-3
7.1.3	Technical Specifications Packages	7-6
7.1.4	Channel Interfaces	7-8
7.1.5	Alternate Use	7-8
7.1.6	Special Facilities Routing	7-8
7.1.7	Design Layout Report	7-9
7.1.8	Acceptance Testing	7-9
7.1.9	Jurisdictional Determination	7-10
7.1.10	Interzone Service	7-11
7.2	**Rate Categories, Applications, and Regulations**	7-12
7.2.1	Rate Categories	7-12
7.2.2	Minimum Periods	7-39
7.2.3	Application of Daily and Monthly Rates	7-39
7.2.4	Facility Hubs and Multiplexing	7-40
7.2.5	Shared Use Analog and Digital High Capacity Services	7-42
7.2.6	DS3 High Capacity	7-43
7.2.7	(Reserved for Future Use)	7-49
7.3	**Metallic Service**	7-50
7.3.1	Basic Circuit Description	7-50
7.3.2	Technical Specifications Packages	7-50
7.3.3	Channel Interfaces	7-50
7.3.4	Optional Features and Functions	7-50
7.3.5	Rates and Charges	7-51
7.4	**Telegraph Grade Service**	7-54
7.4.1	Basic Service Description	7-54
7.4.2	Technical Specifications Packages	7-54
7.4.3	Channel Interfaces	7-54
7.4.4	Optional Features and Functions	7-54
7.4.5	Rates and Charges	7-55

© 2022 Frontier Communications Parent, Inc. All rights reserved.

ACCESS SERVICE

TABLE OF CONTENTS (Cont'd)

		Page No.
7.	**SPECIAL ACCESS SERVICE** (Cont'd)	
7.5	**Voice Grade Service**	7-59
7.5.1	Basic Circuit Description	7-59
7.5.2	Technical Specifications Packages	7-60
7.5.3	Channel Interfaces	7-61
7.5.4	Optional Features and Functions	7-61
7.5.5	Rates and Charges	7-67
7.6	**Program Audio Service**	7-74
7.6.1	Basic Circuit Description	7-74
7.6.2	Technical Specifications Packages	7-74
7.6.3	Channel Interfaces	7-75
7.6.4	Optional Features and Functions	7-75
7.6.5	Rates and Charges	7-76
7.7	**Video Digital Transport Service TV-1 Analog Service**	7-89
7.7.1	Basic Circuit Description	7-89
7.7.2	Technical Specifications Packages	7-89
7.7.3	Channel Interfaces	7-90
7.7.4	Rate Application	7-91
7.7.5	Rates and Charges	7-94
7.8	**Wideband Analog Service**	7-98
7.8.1	Basic Circuit Description	7-98
7.8.2	Technical Specifications Package	7-98
7.8.3	Channel Interfaces	7-99
7.8.4	Optional Features and Functions	7-99
7.8.5	Rates and Charges	7-101
7.9	**Wideband Data Service**	7-104
7.9.1	Basic Circuit Description	7-104
7.9.2	Technical Specifications Package	7-104
7.9.3	Channel Interfaces	7-104
7.9.4	Optional Features and Functions	7-105
7.9.5	Rates and Charges	7-106

© 2022 Frontier Communications Parent, Inc. All rights reserved.

TABLE OF CONTENTS (Cont'd)

		Page No.
7.	**SPECIAL ACCESS SERVICE** (Cont'd)	
7.10	**Digital Data Service**	7-111
7.10.1	Basic Circuit Description	7-111
7.10.2	Technical Specifications Packages	7-111
7.10.3	Channel Interfaces	7-112
7.10.4	Optional Features and Functions	7-112
7.10.5	Rates and Charges	7-113
7.11	**High Capacity Service**	7-118
7.11.1	Basic Circuit Description	7-118
7.11.2	Technical Specifications Packages	7-118
7.11.3	Channel Interfaces	7-119
7.11.4	Optional Features and Functions	7-119
7.11.5	Rates and Charges	7-123
7.12	**Individual Case Filing**	7-157
7.13	**High Voltage Protection**	7-164
7.13.1	Description	7-164
7.13.2	Provisioning	7-164
7.13.3	Claims and Demands for Damage	7-165
7.13.4	Network Outage	7-166
7.13.5	Compliance Statement	7-166
7.13.6	Rate Regulations	7-166
7.13.7	Rates and Charges	7-168
7.14	**LAN Extension Service**	7-168
7.14.1	General	7-168
7.14.2	Service Description	7-168
7.14.3	Technical Specifications Package	7-169
7.14.4	Responsibilities and Rights of the Telephone Company	7-169
7.14.5	Responsibilities of the Customer	7-170
7.14.6	Rate Regulations	7-170
7.14.7	Rates and Charges	7-173
7.15	**Bonded Digital Link Service**	7-169
7.15.1	Basic Circuit Description	7-169
7.15.2	Terms and Conditions	7-169
7.15.3	Rates and Charges	7-170
8.	**MISCELLANEOUS SERVICES**	8-1
8.1	**Additional Engineering**	8-1
8.1.1	Charges for Additional Engineering	8-2

© 2022 Frontier Communications Parent, Inc. All rights reserved.

ACCESS SERVICE

TABLE OF CONTENTS (Cont'd)

		Page No.
8	**Miscellaneous Services** (cont'd)	
8.2	**Additional Labor**	8-3
8.2.1	Overtime Installation	8-3
8.2.2	Overtime Repair	8-3
8.2.3	Stand By	8-3
8.2.4	Maintenance with other Telephone Companies	8-3
8.2.5	Other Labor	8-3
8.2.6	Charges for Additional Labor	8-4
8.3	**Maintenance of Service**	8-6
8.4	**Additional Testing**	8-7
8.5	**RESERVED**	8-10
8.6	**RESERVED**	8-28
8.7	**RESERVED**	8-34
8.8	**Telecommunications Service Priority**	8-35
8.8.1	General	8-35
8.8.2	Priority Installation	8-35
8.8.3	Priority Restoration	8-36
8.8.4	Rates and Charges	8-37
9.	**RESERVED**	9-1
10.	**RESERVED**	10-1

© 2022 Frontier Communications Parent, Inc. All rights reserved.

ACCESS SERVICE

TABLE OF CONTENTS (Cont'd)

11.	**SPECIAL FACILITIES ROUTING OF ACCESS SERVICES**	11-1
11.1	**Description of Special Facilities Routing of Access Services**	11-1
11.2	**Rates and Charges for Special Facilities Routing of Access Service**	11-2
11.2.1	Diversity	11-2
11.2.2	Avoidance	11-2
11.2.3	Diversity and Avoidance Combined	11-3
11.2.4	Cable-Only Facilities	11-3
12.	**SPECIALIZED SERVICE OR ARRANGEMENTS**	12-1
12.1	**General**	12-1
12.2	**Rates and Charges**	12-2
13.	**EXCEPTIONS TO ACCESS SERVICE OFFERINGS**	13-1
14.	**RESERVED**	14-1
15.	**RESERVED**15-1	
16.	**RESERVED**	16-1
17.	**RESERVED**	17-1

© 2022 Frontier Communications Parent, Inc. All rights reserved.

ACCESS SERVICE

TABLE OF CONTENTS (Cont'd)

			Page No.
18.		**ADVANCED COMMUNICATIONS NETWORKS**	18-1
		(A) General	18-1
		(B) Generic Name	18-1
		(C) Service Rearrangements	18-1
		(D) Moves	18-2
18.1		**Packet Switching Network Service ***	18-4
(A)		Service Description	18-4
(B)		Service Provisioning	18-4
(C)		Rate Regulations	18-5
	(1)	Minimum Period	18-5
	(2)	Rate Application	18-5
(D)		Supplemental Features	18-6
	(1)	Fast Select	18-6
	(2)	Priority	18-6
(E)		(Reserved for Future Use)	18-7

* Effective November 19, 2005, this service is no longer available to any customer who is not a customer as of November 19, 2005. Effective November 19, 2005, existing customers may not make additions, moves or changes to this service or submit any new orders for this service.

© 2022 Frontier Communications Parent, Inc. All rights reserved.

ACCESS SERVICE

TABLE OF CONTENTS (Cont'd)

				Page No.
19.	**RESERVED**			19-1
20.	**Ethernet Private Line**			20-1
(A)	General			20-1
(B)	Service Description			20-2
(C)	Conditions			20-2
(D)	Application of Rates and Charges			20-4
	(1)	(a)	Reserved for Future Use	20-4
		(b)	Reserved for Future Use	20-4
		(c)	Reserved for Future Use	20-4
		(d)	Reserved for Future Use	20-5
		(e)	Reserved for Future Use	20-5
		(f)	Reserved for Future Use	20-5
		(g)	Reserved for Future Use	20-6
		(h)	Express Connect	20-7
		(i)	Flex Express Connect	20-8
		(j)	Custom Connect	20-9
	(2)	Optical Network Transport		20-17
		(a)	Reserved for Future Use	20-17
		(b)	Reserved for Future Use	20-17
		(c)	Reserved for Future Use	20-17
		(d)	Reserved for Future Use	20-17
		(e)	Reserved for Future Use	20-18
		(f)	Banded Optical Transport	20-18

© 2022 Frontier Communications Parent, Inc. All rights reserved.

ACCESS SERVICE
TABLE OF CONTENTS

		Page No.	
20.	**Optical Networking** Cont'd)		
(E)	Reserved for Future Use	20-21	
(F)	Reserved for Future Use	20-21	
(G)	Rate Regulations	20-22	
	(1) Changes in Length of a TPP	20-22	
	(2) Renewal Options	20-23	
	(3) Conversion	20-24	
	(4) Rate Changes	20-24	
	(5) Termination Liability	20-24	
	(6) Termination Without Liability	20-24	
	(7) Upgrade to Higher Bandwidth	20-25	
(H)	Off-Net Wire Center	20-25	
(I)	Shared Use	20-25	
(J)	(Reserved for Future Use)	20-26	
(K)	Reserved for Future Use	20-27	
(L)	Rates and Charges	20-28	
20.1	**Dedicated SONET Optical Transport Service (DSOTS)**	20-80	
20.2	**Dedicated SONET Ring**	20-128	
20.3	**Ethernet Private Line**	20-192	
20.4	**Dedicated SONET Entrance Facilities (DSEF)**	20-215	
21.	**Operating Territories of the Frontier Telephone Companies**	21-1	
(A)	Operating Territory of Frontier Communications of the Southwest Inc.	21-2	
(B)	Operating Territory of. Frontier North Inc.	21-5	
(C)	RESERVED	21-7	(D)
(D)	Operating Territory of Frontier Communications of the Carolinas LLC	21-8	
21.1	**Competitive Counties for Special Access**	21.9	
	21.1 General	21.9	
	21.2 Competitive County Lists	21.9	
22.	**RESERVED**	22-1	
23.	**Service Components**	23-1	
23.1	**Integrated Optical Service Riders**	23-1	
23.1.1	General	23-1	
23.1.2	Deployment and Availability	23-1	
23.1.3	Connection to Other Services	23-1	
23.1.4	Responsibility of the Customer	23-2	
23.1.5	Conversions	23-2	
23.1.6	Application of Rates	23-2	
23.1.7	Term Plans	23-2	
23.1.8	Expiration of Commitment Period	23-2	
23.1.9	Termination Liability	23-3	
23.1.10	Minimum Period	23-3	
23.1.11	Rates and Charges	23-4	

© 2022 Frontier Communications Parent, Inc. All rights reserved.

ACCESS SERVICE

CONCURRING CARRIERS

NO CONCURRING CARRIERS

CONNECTING CARRIERS

NO CONNECTING CARRIERS

OTHER PARTICIPATING CARRIERS

NO OTHER PARTICIPATING CARRIERS

REGISTERED SERVICE MARKS	REGISTERED TRADEMARKS
NONE	NONE

© 2022 Frontier Communications Parent, Inc. All rights reserved.

ACCESS SERVICE

EXPLANATION OF SYMBOLS

(C)	- To signify changed regulation
(D)	- To signify discontinued rate or regulation
(I)	- To signify increase
(M)	- To signify matter relocated without change
(N)	- To signify new rate or regulation
(R)	- To signify reduction
(S)	- To signify reissued matter
(T)	- To signify a change in text but no change in rate or regulation
(Z)	- To signify a correction

EXPLANATION OF ABBREVIATIONS

ac	- Alternating current
ACNA	- Access Customer Name Abbreviation
AML	- Actual Measured Loss
ANI	- Automatic Number Identification
AP	- Program Audio
ARC	- Access Recovery Charge
ASR	- Access Service Request
AT&T	- American Telephone and Telegraph Company
ATM	- Asynchronous Transfer Mode (ATM) Network Service
BAN	- Billing Account Number
BD	- Business Day
BHMC	- Busy Hour Minutes of Capacity
BSA	- Basic Serving Arrangement
BSE	- Basic Service Element
CAC	- Carrier Access Code
CAROT	- Centralized Automatic Reporting on Trunks
CCS7	- Common Channel Signaling System 7
CI	- Changes Interface
CIC	- Carrier Identification Code
CLO	- Control Link Oscillator
CNM	- Customer Network Management
CO	- Central Office
COCTX	- Central Office Centrex
Cont'd	- Continued
CPE	- Customer Provided Equipment
CSM	- Customer Service Management
Ctx	- Centrex
dB	- decibel
dBrnC	- Decibel Reference Noise C-Message Weighting
dBrnCO	- Decibel Reference Noise C-Message Weighted O
dBv	- Decibel(s) Relative to 1 Volt (Reference)
dBvl	- Decibel(s) Relating to 1 Volt (Reference)
dc	- direct current
DSAL	- Dedicated Switched Access Line
DSAT	- Dedicated Switched Access Transport
DTM	- Direct TLI Monitoring Optional Feature
DWDM	- Dense Wave Division Multiplexing
EDD	- Envelope Delay Distortion
ELEPL	- Equal Level Echo Path Loss
EML	- Expected Measured Loss
EPL	- Echo Path Loss
ERL	- Echo Return Loss
ESCON	- Enterprise Systems Connection
ESS	- Electronic Switching System
ESSX	- Electronic Switching System Exchange
F	- frequency

© 2022 Frontier Communications Parent, Inc. All rights reserved.

ACCESS SERVICE

EXPLANATION OF ABBREVIATIONS (Cont'd)

FICON	- Fiber Connection
FID	- Field Identifier
FCC	- Federal Communications Commission
FNPA	- Foreign Numbering Plan Area
FX	- Foreign Exchange
HC	- High Capacity
Hz	- Hertz
IC	- Interexchange Carrier
ICB	- Individual Case Basis
ICL	- Inserted Connection Loss
DSOTS	- Digital SONET Optical Transport Service
ISC	- InterSystem Channel
Kbps	- Kilobits per second
KHZ	- Kilohertz
LATA	- Local Access and Transport Area
Ma	- Milliamperes
Mbps	- Megabits per second
MF	- Multifrequency
MHz	- Megahertz
MMUC	- Minimum Monthly Usage Charge
MRC	- Monthly Recurring Charge
MT	- Metallic
MTS	- Message Telecommunications Service(s)
NPA	- Numbering Plan Area (D)
NG-ADM	- Next Generation – Add/Drop Multiplexing
NMM	- Network Management Methods
NRC	- Nonrecurring Charge
NTS	- Non-Traffic Sensitive
NXX	- Three-Digit Central Office Code
OCN	- Optical Carrier Rate
OTPL	- Zero Transmission Level Point
PBX	- Private Branch Exchange
PCM	- Pulse Code Modulation
PLP	- Private Line Ringdown
POT	- Point of Terminations
Rms	- root-mean-square
RPON	- Related Purchase Order Number
RSM	- Remote Switching Modules
RSS	- Remote Switching Systems
SASG	- Special Access Service Guarantee
SCP	- Service Control Point
SLA	- Service Level Agreement
SONET	- Synchronous Optical Network
SPNP	- Service Provider Number Portability
SRL	- Singing Return Loss
SS7	- Signaling System 7
SSN	- Switched Service Network
SSP	- Service Switching Point
STP	- Signaling Transfer Point
STS1-N	- Synchronous Transport Signal 1 Rate
SWC	- Serving Wire Center

© 2022 Frontier Communications Parent, Inc. All rights reserved.

ACCESS SERVICE

EXPLANATION OF ABBREVIATIONS (Cont'd)

TES	- Telephone Exchange Service(s)
TLP	- Transmission Level Point
TSP	- Telecommunications Service Priority
TSPS	- Traffic Service Position System
TV	- Television
USOC	- Uniform Service Order Code
VG	- Voice Grade
V & H	- Vertical & Horizontal
WA	- Wideband Analog
WATS	- Wide Area Telecommunications Service(s)
WD	- Wideband Data

© 2022 Frontier Communications Parent, Inc. All rights reserved.

ACCESS SERVICE

REFERENCE TO OTHER TARIFFS

Whenever reference is made in this Guide to other tariffs, the reference is to the tariffs in force as of the effective date of this Guide, and to amendments thereto and successive issues thereof.

The following tariff is referenced in this Guide and may be obtained from the National Exchange Carrier Association, 80 South Jefferson Road, Whippany, NJ 07981-1009, 800-228-8597, or in electronic format on the internet at www.neca.org.

National Exchange Carrier Association, Inc. (NECA)
Tariff F.C.C. No. 4

REFERENCE TO OTHER PUBLICATIONS

The following technical publications are referenced in this Guide and may be obtained from Telcordia Technologies, Customer Service, One Telcordia Drive, RRC 1B-180, Piscataway, NJ 08854-4156, (866)672-6997, or on the Internet at www.telcordia.com.

Compatibility Bulletin 106, Issue 2	Issued: January 1998

Technical Reference:

GR-54-CORE, Issue 1	Issued: December 1995
GR-63-CORE, Issue 3	Issued: March 2006
GR-253-CORE, Issue 4	Issued: December 2005
GR-320-CORE, Issue 1	Issued: August 2003
GR-334-CORE, Issue 1	Issued: July 1994
GR-337-CORE, Issue 1	Issued: December 1995
GR-338-CORE, Issue 1	Issued: December 1995
GR-342-CORE, Issue 1	Issued: December 1995
GR-487-CORE, Issue 3	Issued: April 2009
GR-499-CORE, Issue 3	Issued: September 2004
GR-905-CORE, Issue 11	Issued: December 2008

© 2022 Frontier Communications Parent, Inc. All rights reserved.

ACCESS SERVICE

REFERENCE TO OTHER PUBLICATIONS (Cont'd)

Technical Reference: (Cont'd)

GR-1089-CORE, Issue 4	Issued: June 2006
GR-1312-CORE, Issue 3	Issued: April 1999
GR-1374-CORE, Issue 1	Issued: December 1994
GR-1400-CORE, Issue 3	Issued: July 2006
GR-1YOD-CORE, Issue 1	Issued: January 1998
GR-2918-CORE, Issue 6	Issued: January 2003
GR-2979-CORE, Issue 5	Issued: March 2005
PUB 41004	Issued: October 1973
PUB 62310	Issued: September 1983
SR-3580, Issue 3	Issued: June 2007
ST-TEC-000053, Issue 1	Issued: August 1989
Telecommunications Transmission Engineering Volume 3 - Networks and Services (Chapters 6 and 7)	
TR-NPL-000336, Issue 1	Issued: October 1987
TR-NPL-000339	Issued: October 1987
TR-NPL-000340	Issued: October 1986
TR-NWT-000335, Issue 3	Issued: May 1993
TR-NWT-000341, Issue 2	Issued: February 1993

© 2022 Frontier Communications Parent, Inc. All rights reserved.

ACCESS SERVICE

REFERENCE TO OTHER PUBLICATIONS (Cont'd)

The following technical publication is referenced in this Guide and may be obtained from Telcordia Routing Administration, 8 Corporate Place PYA 3N-141, Piscataway, NJ 08854-4156, 1(866) 672-4156.

Technical Reference:

The Local Exchange Routing Guide (LERG), Issued: April, 2007, and as issued from time to time

The following publications are referenced in this Guide and may be obtained from the Government Printing Office, Superintendent of Documents, Document Control Branch, 941 N. Capitol Street, N.E., Washington, DC 20401.

Telecommunications Service Priority (TSP) System for National
Security Emergency Preparedness (NSEP) Service Vendor Handbook,
National Communications Systems (NCS) H 3-1-2
Issued: December 2000

Telecommunications Service Priority (TSP) System for National
Security Emergency Preparedness (NSEP) Service User Manual,
National Communications System (NCS) M 3-1-1
Issued: May 2000

The following technical publication is referenced in this Guide and may be obtained from the National Exchange Carrier Association, Inc., 80 S. Jefferson Road, Whippany, NJ 07981-1009 or on the Internet at www.neca.org.

PUB AS No. 1, Issue II
Issued: May 1984

The following publications are referenced in this Guide and may be obtained from the International Telecommunications Union (ITU), Place des Nations, CH-1211, Geneva 20, Switzerland or on the internet at www.itu.int.net.

ITU-T G.692	Issued: October 1998, Amendment 1 January 2005
ITU-T G.959.1	Issued: December 2003

© 2022 Frontier Communications Parent, Inc. All rights reserved.

ACCESS SERVICE

REFERENCE TO OTHER PUBLICATIONS (Cont'd)

The following publications are referenced in this Guide and may be obtained from Alliance for Telecommunications Industry Solutions (ATIS), 1200 G Street, NW, Suite 500, Washington, DC 20005 or on the Internet at www.atis.org.

Multiple Exchange Carrier Access Billing Guidelines (MECAB)
ATIS/OBF-MECAB 009, Issue 9 Issued: January 2007

Multiple Exchange Carrier Ordering and Design Guidelines (MECOD)
ATIS-0404120-0007, Issue 7 Issued: April 2009

The following publications are referenced in this Guide and may be obtained from IBM North America, 590 Madison Avenue, New York, NY 10022; 1-800-426-4968 or on the Internet at www.ibm.com/us. Note: ESCON® is a registered trademark of the International Business Machines (IBM) Corporation.

Enterprise Systems Architecture/390 ESCON I/O Interface, Physical Layer (Seventh Edition)
SA23-0394-06 Issued: July 2008
Coupling Facility Channel Physical Layer (Sixth Edition)
SA23-0395-05 Issued: July 2008
Planning Fiber Optic Channel Links (Twelfth Edition)
GA23-0367-12 Issued: July 2009
OS/390 Parallel Sysplex Configuration Volume 2: Cookbook
SG24-5638-00 Issued: August 2000
S/390 Time Management and IBM 9037 Sysplex Timer
SG24-2070-00 Issued: May 1999

The following publication is referenced in this Guide and may be obtained from the Society of Motion Picture and Television Engineers (SMPTE), 3 Barker Avenue, 5th Floor, White Plains, NY 10601, (914)761-1100, or on the Internet at www.smpte.org.

SMPTE 0259M-2008 Issued: 2008

© 2022 Frontier Communications Parent, Inc. All rights reserved.

ACCESS SERVICE

REFERENCE TO OTHER PUBLICATIONS(Cont'd)

The following publications are referenced in this Guide and may be obtained from the American National Standards Institute (ANSI), 25 West 43rd Street, 4th Floor, New York, New York 10036, or on the Internet at www.ansi.org.

ANSI T1.102-1993 (R2005)	Issued: 2005
ANSI T1.102.01-1996 (R2001)	Issued: 2001
ANSI T1.105.01-2000 (R2005)	Issued: 2005
ANSI INCITS 148-1988 (R2004)	Issued: 2004
ANSI INCITS 166-1989 (R2005)	Issued: 2005
ANSI INCITS 296-1997 (R2007)	Issued: 2007
ANSI INCITS 303-1998 (R2003)	Issued: 2003

The following publications are referenced in this Guide and may be obtained from Institute of Electrical and Electronics Engineers, Inc., IEEE Standards Association, 445 Hoes Lane, P.O. Box 1331, Piscataway, NJ 08855-1331, or in electronic format on the Internet at www.ieee.org.

IEEE 802.3-2005/Cor2/D2.0-2007	Issued: 2007
IEEE 802.3u-1995	Issued: 1995
IEEE 802.3z-1998	Issued: 1998
IEEE 802.3ae-2002	Issued: 2002

The following publication is referenced in this Guide and may be obtained from the COMM 2000, 1414 Brook Drive, Downers Grove, IL 60515 (888)-UL33503 or on the Internet at www.comm-2000.com.

UL 94, Edition 5	Issued: October 1996

The following publications are referenced in this Guide and may be obtained from the Internet Engineering Task Force (IETF) at IETF Secretariat, c/o Association Management Solutions, LLC (AMS), 48377 Fremont Blvd., Suite 117, Fremont, California 94538, or on the Internet at www.ietf.org .

STD 0001: Internet Official Protocol Standards, J Postel, Editor, Issued: May 2008.

RFC 2138, Remote Authentication Dial-In User Service (RADIUS); C Rigney, A. Rubens, W. Simpson, S. Willens, Issued: April 1997.

The following publication is referenced in this Guide and may be obtained from the Frontier Carrier Services, 1919 MCKINNEY AVE, DALLAS TX 75201.

Technical Memorandum for Incidental InterLATA Call Management Signaling Service associated with the Verizon FCC Short Term Notice of Network Change dated March 2007. Issued: March 2007

2022 Frontier Communications Parent, Inc. All rights reserved.

ACCESS SERVICE

2. General Regulations

2.1 Undertaking of the Telephone Company

2.1.1 Scope

(A) The Telephone Company does not undertake to transmit messages under this Guide.

(B) The Telephone Company shall be responsible only for the installation, operation and maintenance of the services it provides.

(C) The Telephone Company will, for maintenance purposes, test its services only to the extent necessary to detect and/or clear troubles.

(D) Services are provided 24 hours daily, seven days per week, except as set forth in other applicable sections of this Guide.

(E) The Telephone Company does not warrant that its facilities and services meet standards other than those set forth in this Guide.

2.1.2 Limitations

(A) The customer may not assign or transfer the use of services provided under this Guide; however, where there is no interruption of use or relocation of the services, such assignment or transfer may be made to:

(1) another customer, whether an individual, partnership, association or corporation, provided the assignee or transferee assumes all outstanding indebtedness for such services, and the unexpired portion of the minimum period and the termination liability applicable to such services, if any; or

2022 Frontier Communications Parent, Inc. All rights reserved.

ACCESS SERVICE

2. **General Regulations** (Cont'd)

2.1 **Undertaking of the Telephone Company** (Cont'd)

2.1.2 **Limitations** (Cont'd)

(A) (Cont'd)

(2) a court-appointed receiver, trustee or other person acting pursuant to law in bankruptcy, receivership, reorganization, insolvency, liquidation or other similar proceedings, provided the assignee or transferee assumes the unexpired portion of the minimum period and the termination liability applicable to such services, if any.

In all cases of assignment or transfer, the written acknowledgment of the Telephone Company is required prior to such assignment or transfer which acknowledgment shall be made within 15 days from the receipt of notification. All rates, regulations and conditions contained in this Guide shall apply to such assignee or transferee.

The assignment or transfer of services does not relieve or discharge the assignor or transferor from remaining jointly or severally liable with the assignee or transferee for any obligation existing at the time of the assignment or transfer.

(B) The regulations for the restoration and installation of Telecommunications Service Priority (TSP) System services shall be in accordance with Part 64, Subpart D, Appendix A, of the Federal Communications Commission's Rules and Regulations and Section 8.8 following.

(C) Subject to compliance with the rules mentioned in (B) preceding, the services offered herein will be provided to customers on a first-come, first-served basis, except as outlined in (D) following.

(D) When an end office is scheduled to be converted to an equal access end office, and a shortage of facilities exists, the Telephone Company will allocate available resources to participating ICs as set forth in 5.1.5(A) following.

2022 Frontier Communications Parent, Inc. All rights reserved.

ACCESS SERVICE

2. General Regulations (Cont'd)

2.1 Undertaking of the Telephone Company (Cont'd)

2.1.3 Liability

(A) The Telephone Company's liability, if any, for its willful misconduct is not limited by this Guide. With respect to any other claim or suit, by a customer or by any others, for damages associated with the installation, provision, preemption, termination, maintenance, repair or restoration, of service, and subject to the provisions of (B) through (H) following, the Telephone Company's liability if any, shall not exceed an amount equal to the proportionate charge for the service for the period during which the service was affected. This liability for damages shall be in addition to any amounts that may otherwise be due the customer under this Guide as a Credit Allowance for a Service Interruption.

(B) The Telephone Company shall not be liable for any act or omission of any other carrier or customer providing a portion of a service, nor shall the Telephone Company for its own act or omission hold liable any other carrier or customer providing a portion of a service.

(C) The Telephone Company is not liable for damages to the customer premises resulting from the furnishing of a service, including the installation and removal of equipment and associated wiring, unless the damage is caused by the Telephone Company's negligence.

(D) The Telephone Company shall be indemnified, defended and held harmless by the customer against any claim, loss or damage arising from the customer's use of services offered under this Guide, involving:

(1) Claims for libel, slander, invasion of privacy, or infringement of copyright arising from the customer's own communications.

2022 Frontier Communications Parent, Inc. All rights reserved.

ACCESS SERVICE

2. General Regulations (Cont'd)

2.1 Undertaking of the Telephone Company (Cont'd)

2.1.3 Liability (Cont'd)

(D) (Cont'd)

(2) Claims for patent infringement arising from the customer's acts combining or using the service furnished by the Telephone Company in connection with facilities or equipment furnished by the customer or;

(3) All other claims arising out of any act or omission of the customer in the course of using services provided pursuant to this Guide.

(E) The Telephone Company does not guarantee or make any warranty with respect to its services when used in an explosive atmosphere. The Telephone Company shall be indemnified, defended and held harmless by the customer from any and all claims by any person relating to such customer's use of services so provided.

(F) No license under patents (other than the limited license to use) is granted by the Telephone Company or shall be implied or arise by estoppel, with respect to any service offered under this Guide.

(G) The Telephone Company's failure to provide or maintain services under this Guide shall be excused by labor difficulties, governmental orders, civil commotions, criminal actions taken against the Telephone Company, acts of God and other circumstances beyond the Telephone Company's reasonable control, subject to the Credit Allowance for a Service Interruption as set forth in 2.4.4 following.

2022 Frontier Communications Parent, Inc. All rights reserved.

ACCESS SERVICE

2. **General Regulations** (Cont'd)

2.1 **Undertaking of the Telephone Company** (Cont'd)

2.1.4 **Provision of Services**

The Telephone Company, to the extent that such services are or can be made available with reasonable effort, and after provision has been made for the Telephone Company's telephone exchange services, will provide to the customer upon reasonable notice services offered in other applicable sections of this Guide at rates and charges specified therein.

2.1.5 **Installation and Termination of Services**

Except as provided for Expanded Interconnection Service specified in Section 17, the services provided under this Guide (A) will include any entrance cable or drop wiring and wire or intrabuilding cable to that point where provision is made for termination of the Telephone Company's outside distribution network facilities at a location at the customer-designated premises and (B) will be installed by the Telephone Company to such Point of Termination. The Telephone Company will work cooperatively with the customer to determine the location of the Point of Termination in accordance with the Telephone Company's standard operating procedures.

Each Access Service has only one Point of Termination per customer premises. Any additional terminations beyond such Point of Termination are the sole responsibility of the customer. Moves of the Point of Termination are handled as set forth in 6.5.4(C) and 7.2.1(D)(3).

2.1.6 **Maintenance of Services**

(A) The services provided under this Guide shall be maintained by the Telephone Company. The customer or others may not rearrange, move, disconnect, remove or attempt to repair any facilities provided by the Telephone Company, other than by connection or disconnection to any interface means used, except with the written consent of the Telephone Company.

(B) Customer provided transmission facilities and equipment terminating in the Telephone Company wire center or Telephone Company access tandem for purposes of physical Expanded Interconnection Service (EIS), as set forth in Section 17, will not be maintained by the Telephone Company. Customer provided facilities and equipment terminating in Telephone Company manhole or similar location for virtual EIS will be maintained by the Telephone Company.

2022 Frontier Communications Parent, Inc. All rights reserved.

ACCESS SERVICE

2. **General Regulations** (Cont'd)

2.1 **Undertaking of the Telephone Company** (Cont'd)

2.1.7 **Changes, Substitutions and Rearrangements**

Except as provided for equipment and systems subject to FCC Part 68 Regulations at 47 C.F.R Section 68.110(b), the Telephone Company may, where such action is reasonably required in the operation of its business;

(A) Substitute, change or rearrange any facilities used in providing service under this Guide, including but not limited to;
- (1) substitution of different metallic facilities,
- (2) substitution of carrier or derived facilities for metallic facilities used to provide other than metallic facilities, and
- (3) substitution of metallic facilities for carrier or derived facilities used to provide other than metallic facilities; and
- (4) change in the routing of access service traffic.

(B) Change minimum protection criteria;

(C) Change operating or maintenance characteristics of facilities or,

(D) Change operations or procedures of the Telephone Company.

In case of any such substitution, change or rearrangement, the transmission parameters will be within the range as set forth in 6., 7. and 9. following. The Telephone Company shall not be responsible if any such substitution, change or rearrangement renders any customer furnished services obsolete or requires modification or alteration thereof or otherwise affects their use or performance. If such substitution, change or rearrangement materially affects the operating characteristics of the facility, the Telephone Company will provide reasonable notification to the customer in writing. Reasonable time will be allowed for any redesign and implementation required by the change in operating characteristics. The Telephone Company will work cooperatively with the customer to determine reasonable notification procedures.

2022 Frontier Communications Parent, Inc. All rights reserved.

ACCESS SERVICE

2. **General Regulations** (Cont'd)

2.1 **Undertaking of the Telephone Company** (Cont'd)

2.1.8 **Refusal and Discontinuance of Service**

(A) Unless the provisions of 2.2.1(B) or 2.5.1 following apply, if a customer fails to comply with the regulations set forth in: 2.1.6, Maintenance of Service; 2.2.2, Unlawful Use; 2.3.1, Damages; 2.3.4, Availability for Testing; 2.3.5, Balance; and 2.4, Payment Arrangements and Credit Allowances or, if applicable, 2.5.3, 2.5.4, 17.3.4 and 17.7.6(D), Expanded Interconnection Service (EIS) or fails to make any payment to be made by it on the dates and times herein specified, the Telephone Company may, on thirty (30) days written notice by Certified U.S. Mail or Overnight Delivery to the person designated by that customer to receive such notices of noncompliance:

(1) Refuse additional applications for service and/or refuse to complete any pending orders for service by the non-complying customer; and/or

(2) Discontinue the provision of the services to the noncomplying customer. In the case of such discontinuance, all applicable charges including termination charges shall become due.

If the Telephone Company does not refuse additional applications for service on the date specified in the thirty (30) days notice given pursuant to (1) above, or does not discontinue its provision of services involved on the date specified in the thirty (30) day notice given pursuant to (2) above and the customer's noncompliance continues, nothing contained herein shall preclude the Telephone Company's right to refuse additional applications for service to the non-complying customer without further notice.

(3) In addition to and not in limitation of the provisions of section 2.1.8(A) preceding, unless the provisions of 2.2.1(B) or 2.5.1 following apply, if a customer fails to comply with 2.4.1(B)(3) or with 2.4.1(A) following, including any bill payments to be made by it on the dates and times herein specified, the Telephone Company may take the actions specified in sections 2.1.8(A)(1) and 2.8.1(A)(2) with regard to services provided hereunder to that customer on fifteen (15) calendar days written notice, such notice period to start the day after the notice is sent by Overnight Delivery, if the customer has not complied with respect to amounts due in a subject bill and either:

(a) the Telephone Company has sent the subject bill to the customer within seven (7) business days from the bill date, or

(b) the Telephone Company has sent the subject bill to the customer more than thirty (30) calendar days before the notice under this section is given.

In all other cases, the Telephone Company will give thirty (30) calendar days written notice pursuant to sections 2.1.8(A). The Telephone Company will maintain records sufficient to validate the date upon which a bill was sent to a customer. Action will not be taken as specified in 2.1.8(A)(1) and 2.8.1(A)(2) with regard to the subject bill if the customer cures the noncompliance prior to the expiration of the fifteen (15) or thirty (30) days notice period, as applicable.

If the Telephone Company does not refuse additional applications for service on the date specified in the fifteen (15) days notice given pursuant to (3) above, or does not discontinue its provision of services involved on the date specified in the fifteen (15) day notice given pursuant to (3) above and the customer's noncompliance continues, nothing contained herein shall preclude the Telephone Company's right to refuse additional applications for service to the non-complying customer without further notice.

(4) If notice is given by Overnight Delivery under this section, it shall be performed by a reputable overnight delivery service such as, or comparable to, the U.S. Postal Service Express Mail, United Parcel Service, or Federal Express.

(5) The Provisions of section 2.1.8(A)(1), (2), and (3) shall not apply to charges that a customer does not pay based on submission of a good faith dispute pursuant to section 2.4.1(D)(1).

2022 Frontier Communications Parent, Inc. All rights reserved.

ACCESS SERVICE

2. **General Regulations** (Cont'd)

2.1 **Undertaking of the Telephone Company** (Cont'd)

2.1.8 **Refusal and Discontinuance of Service** (Cont'd)

(B) When access service is provided by more than one Telephone Company, the Companies involved in providing the joint service may individually or collectively deny service to a customer for nonpayment. Where the Telephone Company(s) affected by the nonpayment is incapable of effecting discontinuance of service without cooperation from the other joint providers of Switched Access Service, such other Telephone Company(s) will, if technically feasible, assist in denying the joint service to the customer. Service denial for such joint service will only include calls originating or terminating within, or transiting, the operating territory of the Telephone Companies initiating the service denial for nonpayment. When more than one of the joint providers must deny service to effectuate termination for nonpayment in cases where a conflict exists in the applicable tariff provisions, the tariff regulations of the end office Telephone Company shall apply for joint service discontinuance.

2022 Frontier Communications Parent, Inc. All rights reserved.

ACCESS SERVICE

2. **General Regulations** (Cont'd)

2.1 **Undertaking of the Telephone Company** (Cont'd)

2.1.9 **Limitation of Use of Metallic Facilities**

Signals applied to a metallic facility shall conform to the limitations set forth in Technical Reference PUB AS No. 1, Issue II. In the case of applications of dc telegraph signaling systems, the customer shall be responsible, at its expense, for the provision of current limiting devices to protect the Telephone Company facilities from excessive current due to abnormal conditions and for the provision of noise mitigation networks when required to reduce excessive noise.

2.1.10 **Notification of Service-Affecting Activities**

The Telephone Company will provide the customer reasonable notification of service-affecting activities that may occur in normal operation of its business. Such activities may include, but are not limited to, equipment or facilities additions, removals or rearrangements, routine preventative maintenance and major switching machine change-out. Generally, such activities are not individual customer service specific, they affect many customer services. No specific advance notification period is applicable to all service-affecting activities. The Telephone Company will work cooperatively with the customer to determine the notification requirements.

2.1.11 **Coordination with Respect to Network Contingencies**

The Telephone Company intends to work cooperatively with the customer to develop network contingency plans in order to maintain maximum network capability following natural or man-made disasters which affect telecommunications services.

2.1.12 **Provision and Ownership of Telephone Numbers**

The Telephone Company reserves the reasonable right to assign, designate or change telephone numbers, any other call number designations associated with Access Services, or the Telephone Company serving central office prefixes associated with such numbers, when necessary in the conduct of its business. Should it become necessary to make a change in such number(s), the Telephone Company will furnish to the customer 6 months notice, by Certified U.S. Mail, of the effective date and an explanation of the reason(s) for such change(s).

2022 Frontier Communications Parent, Inc. All rights reserved.

ACCESS SERVICE

2. **General Regulations** (Cont'd)

2.2 **Use**

2.2.1 **Interference or Impairment**

(A) The characteristics and methods of operation of any circuits, facilities or equipment provided by other than the Telephone Company, including customer transmission equipment and facilities used with Expanded Interconnection Services, and associated with the facilities utilized to provide services under this Guide shall not interfere with or impair service over any facilities of the Telephone Company, its affiliated companies, or its connecting and concurring carriers involved in its services, cause damage to their plant, impair the privacy of any communications carried over their facilities or create hazards to the employees of any of them or the public.

(B) Except as provided for equipment or systems subject to the FCC Part 68 Rules in 47 C.F.R Section 68.108, if such characteristics or methods of operation are not in accordance with (A) preceding, the Telephone Company will, where practicable, notify the customer that temporary discontinuance of the use of a service may be required; however, where prior notice is not practicable, nothing contained herein shall be deemed to preclude the Telephone Company's right to temporarily discontinue forthwith the use of a service if such action is reasonable under the circumstances. In case of such temporary discontinuance, the customer will be promptly notified and afforded the opportunity to correct the condition which gave rise to the temporary discontinuance. During such period of temporary discontinuance, credits as set forth in Section 2.7 following, are not applicable.

2.2.2 **Unlawful Use**

The service provided under this Guide shall not be used for an unlawful purpose.

2.2.3 **Commingling**

Except as provided in Section 51.318 of the Federal Communications Commission's rules, telecommunications carriers who obtain unbundled network elements or combinations of unbundled network elements pursuant to a Statement of Generally Available Terms, under Section 252 of the Act, or pursuant to an interconnection agreement with the Telephone Company, may connect, combine, or otherwise attach such unbundled network elements or combinations of unbundled network elements to access services purchased under this Guide except to the extent such agreement (1) expressly prohibits such commingling; or (2) does not address commingling and the requesting carrier has not negotiated an interconnection agreement (or amendment) expressly permitting such commingling. The rates, terms, and conditions of this Guide will apply to the access services that are commingled. Unbundled network elements or combinations of unbundled network elements that are commingled with access services do not constitute a shared use arrangement as set forth in this Guide, and are therefore not eligible for adjustment of charges under such provisions.

2022 Frontier Communications Parent, Inc. All rights reserved.

ACCESS SERVICE

2. General Regulations (Cont'd)

2.3 Obligations of the Customer

2.3.1 Damages

The customer shall reimburse the Telephone Company for damages to Telephone Company facilities utilized to provide services under this Guide caused by the negligence or willful act of the customer, or resulting from the customer's improper use of the Telephone Company facilities, or due to malfunction of any facilities or equipment provided by other than the Telephone Company. Nothing in the foregoing provision shall be interpreted to hold one customer liable for another customer's actions. The Telephone Company will, upon reimbursement for damages, cooperate with the customer in prosecuting a claim against the person causing such damage and the customer shall be subrogated to the right of recovery by the Telephone Company for the damages to the extent of such payment.

2.3.2 Ownership of Facilities and Theft

Facilities utilized by the Telephone Company to provide service under the provisions of this Guide shall remain the property of the Telephone Company. Such facilities shall be returned to the Telephone Company by the customer, whenever requested, within a reasonable period following the request in as good condition as reasonable wear will permit.

2.3.3 Equipment Space and Power

(A) Except as specified in (B), the customer shall furnish or arrange to have furnished to the Telephone Company, at no charge, equipment space and electrical power required by the Telephone Company to provide services under this Guide at the points of termination of such services. The selection of ac or dc power shall be mutually agreed to by the customer and the Telephone Company. The customer shall also make necessary arrangements in order that the Telephone Company will have access to such spaces at reasonable times for installing, testing, repairing or removing Telephone Company services.

(B) Where available, the Telephone Company shall make available wire center or Telephone Company access tandem floor space and electrical power by the customer for the provision of Expanded Interconnection Service at charges set forth in Section 17.

2022 Frontier Communications Parent, Inc. All rights reserved.

ACCESS SERVICE

2. General Regulations (Cont'd)

2.3 Obligations of the Customer (Cont'd)

2.3.4 Availability for Testing

The services provided under this Guide shall be available to the Telephone Company at times mutually agreed upon in order to permit the Telephone Company to make tests and adjustments appropriate for maintaining the services in satisfactory operating condition. Such tests and adjustments shall be completed within a reasonable time. No credit will be allowed for any interruptions involved during such tests and adjustments.

2.3.5 Balance

All signals for transmission over the services provided under this Guide shall be delivered by the customer balanced to ground except for ground start, duplex (DX) and McCulloh-Loop (Alarm System) type signaling and dc telegraph transmission at speeds of 75 baud or less.

2.3.6 Design of Customer Services

Subject to the provisions of 2.1.7 preceding, the customer shall be solely responsible, at its own expense, for the overall design of its services and for any redesigning or rearrangement of its services which may be required because of changes in facilities, operations or procedures of the Telephone Company, minimum protection criteria or operating or maintenance characteristics of the facilities.

2.3.7 References to the Telephone Company

The customer may advise End Users that certain services are provided by the Telephone Company in connection with the service the customer furnishes to End Users; however, the customer shall not represent that the Telephone Company jointly participates in the customer's services.

2.3.8 Claims and Demands for Damages

(A) With respect to claims of patent infringement made by third persons, the customer shall defend, indemnify, protect and save harmless the Telephone Company from and against all claims arising out of the combining with, or use in connection with, the services provided under this Guide, any circuit, apparatus, system or method provided by the customer.

2022 Frontier Communications Parent, Inc. All rights reserved.

ACCESS SERVICE

2. **General Regulations** (Cont'd)

2.3 **Obligations of the Customer** (Cont'd)

2.3.8 **Claims and Demands for Damages** (Cont'd)

(B) The customer shall defend, indemnify and save harmless the Telephone Company from and against any suits, claims, losses or damages, including punitive damages, attorney fees and court costs by third persons arising out of the construction, installation, operation, maintenance, or removal of the customer's circuits, facilities, or equipment connected to the Telephone Company's services provided under this Guide, including, without limitation, Workmen's Compensation claims, actions for infringement of copyright and/or unauthorized use of program material, libel and slander actions based on the content of communications transmitted over the customer's circuits, facilities or equipment, and proceedings to recover taxes, fines, or penalties for failure of the customer to obtain or maintain in effect any necessary certificates, permits, licenses, or other authority to acquire or operate the services provided under this Guide; provided, however, the foregoing indemnification shall not apply to suits, claims, and demands to recover damages for damage to property, death, or personal injury unless such suits, claims or demands are based on the tortuous conduct of the customer, its officers, agents or employees.

(C) The customer shall defend, indemnify and save harmless the Telephone Company from and against any suits, claims, losses or damages, including punitive damages, attorney fees and court costs by the customer or third parties arising out of any act or omission of the customer in the course of using services provided under this Guide.

2.3.9 **Coordination with Respect to Network Contingencies**

The customer shall, in cooperation with the Telephone Company, coordinate in planning the actions to be taken to maintain maximum network capability following natural or man-made disasters which affect telecommunications services.

2.3.10 **Sectionalization and Trouble Reporting**

The customer will be responsible for reporting troubles sectionalized to Telephone Company facilities and/or equipment. When trouble cannot be clearly sectionalized to the Telephone Company facilities and/or equipment, the Telephone Company will test cooperatively or independently to assist in trouble sectionalization.

2022 Frontier Communications Parent, Inc. All rights reserved.

ACCESS SERVICE

2. **General Regulations** (Cont'd)

2.4 **Payment Arrangements**

2.4.1 **Payment of Rates, Charges and Deposits**

(A) Deposits

The Telephone Company will, in order to safeguard its interests, only require a customer which has a proven history of late payments to the Telephone Company or does not have established credit, to make a deposit prior to or at any time after the provision of a service to the customer to be held by the Telephone Company as a guarantee of the payment of rates and charges. The Telephone Company will notify the customer of a deposit requirement by Overnight Delivery. The customer will be required to make payment of such deposit prior to the provision of service in those cases where the customer has not established credit with the Telephone Company, or otherwise within fifteen (15) business days of such notice. Such notice will start the day after the notice is sent by Overnight Delivery. No such deposit will be required of a customer which is a successor of a company which has established credit and has no history of late payments to the Telephone Company. Such deposit may not exceed the actual or estimated rates and charges for the service for a two month period. The fact that a deposit has been made in no way relieves the customer from complying with the Telephone Company's regulations as to the prompt payment of bills. At such time as the provision of the service to the customer is terminated, the amount of the deposit will be credited to the customer's account and any credit balance which may remain will be refunded.

Such a deposit will be refunded or credited to the account when the customer has established credit or, in any event, after the customer has established a one-year prompt payment record at any time prior to the termination of the provision of the service to the customer. In case of a cash deposit, for the period the deposit is held by the Telephone Company, the customer will receive simple annual interest at a rate of 1% per month or 12% annually. Should a deposit be credited to the customer's account, as indicated above, no interest will accrue on the deposit from the date such deposit is credited to the customer's account.

2022 Frontier Communications Parent, Inc. All rights reserved.

ACCESS SERVICE

2. **General Regulations** (Cont'd)

2.4 **Payment Arrangements** (Cont'd)

2.4.1 **Payment of Rates, Charges and Deposits** (Cont'd)

(B) Payment of Rates and Charges

The Telephone Company shall bill on a current basis all charges incurred by and credits due to the customer under this Guide attributable to services established or discontinued during the preceding billing period. In addition, the Telephone Company shall bill in advance charges for all services to be provided during the ensuing billing period except for charges associated with service usage and for the Federal Government which will be billed in arrears. The bill day (i.e., the billing date of a bill for a customer for Access Service under this Guide), the period of service each bill covers and the payment date will be as follows:

(1) For End User Access Service and Presubscription Service, the Telephone Company will establish a bill day each month for each end user account. The bill will cover End User Access Service charges for the ensuing billing period except for End User Access Service for the Federal Government which will be billed in arrears. Any applicable Presubscription Charges, any known unbilled charges for prior periods and any known unbilled adjustments for prior periods for End User Access Service and Presubscription Service will be applied to this bill. Such bills are due when rendered.

(2) For Switched Access Service, Special Access Service, and Miscellaneous Service charges, the Telephone Company will establish a bill day each month for each customer account. The bill will cover nonusage sensitive service charges for the ensuing billing period for which the bill is rendered, any known unbilled nonusage sensitive charges for prior periods and unbilled usage charges for the period after the last bill day through the current bill day. Any known unbilled usage charges for prior periods and known unbilled adjustments will be applied to this bill. Payment for such bills is due as set forth in (3) following. If payment is not received by the payment date, as set forth in (3) following in immediately available funds, a late payment penalty will apply as set forth in (C) following.

(3) All bills dated as set forth in (2) preceding for service, provided to the customer by the Telephone Company are due 31 days (payment date) after the bill date or by the next bill date (i.e., same date in the following month as the bill date), whichever is the shortest interval, except as

2022 Frontier Communications Parent, Inc. All rights reserved.

ACCESS SERVICE

2. **General Regulations** (Cont'd)

2.4 **Payment Arrangements** (Cont'd)

2.4.1 **Payment of Rates, Charges and Deposits** (Cont'd)

(B) **Payment of Rates and Charges** (Cont'd)

(3) (Cont'd)

provided herein, and are payable in immediately available funds. If such payment date would cause payment to be due on a Saturday, Sunday or Holiday (i.e., New Year's Day, Independence Day, Labor Day, Thanksgiving Day, Christmas Day, the first Tuesday in November and the day when Washington's Birthday, Memorial Day or Columbus Day is legally observed), payment for such bills will be due from the customer as follows:

If such payment date falls on Sunday or on a Holiday which is observed on a Monday, the payment date shall be the first non-Holiday day following such Sunday or Holiday. If such payment date falls on a Saturday or on a Holiday which is observed on Tuesday, Wednesday, Thursday or Friday, the payment date shall be the last non-Holiday day preceding such Saturday or Holiday.

(C) Late Payment Penalty

If the entire amount billed is not received by the Telephone Company in immediately available funds by the payment date, an additional charge (late payment charge) equal to 1/365th of the percentage rate for deposit interest as that in 2.4.1(A) of the unpaid balance will be applied for each day or portion thereof that an outstanding balance remains.

2022 Frontier Communications Parent, Inc. All rights reserved.

ACCESS SERVICE

2. **General Regulations** (Cont'd)

2.4 **Payment Arrangements** (Cont'd)

2.4.1 **Payment of Rates, Charges and Deposits** (Cont'd)

(D) Billing Disputes

In the event that a billing dispute occurs concerning any charges billed to the customer by the Telephone Company the following regulations will apply.

(1) A good faith dispute requires the customer to provide a written claim to the Telephone Company. Instructions for submitting a dispute can be obtained by calling the billing inquiry number shown on the customer's bill, or, by accessing the Telephone Company website also shown on the customer's bill. The written notice should contain the information specified in (2) following.

(2) The date of the dispute shall be the date on which the customer furnishes the Telephone Company the following account information. Such written notice must identify in detail the basis for the dispute, and if the customer withholds disputed amounts, it must identify the account number under which the bill has been rendered, the date of the bill and the specific items on the bill being disputed, to permit the Telephone Company to investigate the merits of the dispute.

(3) The date of resolution shall be the date on which the Telephone Company completes its investigation of the dispute, notifies the customer of the disposition and applies a credit for the amount of the dispute resolved in the customer's favor or late payment penalty as appropriate. The Telephone Company will work cooperatively with any customer to resolve billing disputes.

(4) If a billing dispute is resolved in favor of the Telephone Company, any payments withheld pending resolution of the dispute shall be subject to the late payment penalty as set forth in (C) preceding.

2022 Frontier Communications Parent, Inc. All rights reserved.

ACCESS SERVICE

2. **General Regulations** (Cont'd)

2.4 **Payment Arrangements** (Cont'd)

2.4.1 **Payment of Rates, Charges and Deposits** (Cont'd)

(D) Billing Disputes (Cont'd)

(5) If the customer pays the bill in full by the payment due date, and later initiates a billing dispute, penalty interest may be applicable. (C)

If the billing dispute is resolved in favor of the customer, the customer shall receive a credit from the Telephone Company. This credit will be an amount equal to the disputed amount resolved in the customers' favor times a penalty factor of 1% per month or 12% annually. The penalty factor will apply from the date of the customer's payment through the date on which the credit is posted to the customer's account.

If the dispute is resolved in favor of the Telephone Company, neither a late payment charge nor a penalty interest charge is applicable. (C)

© 2022 Frontier Communications Parent, Inc. All rights reserved.

ACCESS SERVICE

2. **General Regulations** (Cont'd)

2.4 **Payment Arrangements** (Cont'd)

2.4.1 **Payment of Rates, Charges and Deposits** (Cont'd)

(E) Billing Adjustments and Rounding

Adjustments for the quantities of services established or discontinued in any billing period beyond the minimum period set forth for services in other sections of this Guide will be prorated to the number of days or major fraction of days based on a 30 day month. When a rate as set forth in this Guide is shown to more than two decimal places, the charges will be determined using the rate shown. The resulting amount will then be rounded to the nearest penny (i.e., rounded to two decimal places).

© 2022 Frontier Communications Parent, Inc. All rights reserved.

ACCESS SERVICE

2. **General Regulations** (Cont'd)

2.4 **Payment Arrangements** (Cont'd)

2.4.1 **Payment of Rates, Charges and Deposits** (Cont'd)

(F) Provision of Access Service Billing and Bill Verification

(1) The Telephone Company will, upon reasonable request and if available, furnish such detailed information as may be required for verification of any bill.

(2) The customer will receive its monthly bills in a standard paper format, or, at the customer's option, on magnetic tape in standard industry format for those access services for which the Telephone Company is technically capable of providing magnetic tape billing. The rules and regulations concerning payment arrangements and credit allowances described in this Section 2.4.1 apply to all primary monthly access bills, regardless of the chosen bill medium. Additional copies of the customer's bill may be provided in standard paper format at the rates and charges set forth in (3) following. When the customer requests a paper copy of the customer's bill in addition to the customer bill provided on magnetic tape, the rate set forth in (3) following shall apply per page.

		Rate
(3)	Additional copies of the customer's monthly bill or service and features record in standard paper format, per page	$0.00

© 2022 Frontier Communications Parent, Inc. All rights reserved.

ACCESS SERVICE

2. **General Regulations** (Cont'd)

2.4 **Payment Arrangements** (Cont'd)

2.4.2 **Minimum Periods**

The minimum period for which services are provided are for which rates and charges are applicable is one month except as otherwise specified. The minimum period for which DS3 services are provided and which rates are applicable are in Section 7. The minimum periods for which Expanded Interconnection Services are provided and which rates are applicable are in Section 17. The minimum periods for Optical Networking term plan services are provided and which rates and charges are applicable are in Section 20. The minimum period for which service is provided and for which rates and charges are applicable for a Specialized Service or Arrangement provided on an individual case basis as set forth in 12 following, is one month unless a different minimum period is established which the individual case filing. As specified in Section 5.3.3 following, when a service is discontinued prior to the expiration of the minimum period, charges are applicable, whether the service is used or not, as follows: (C) (C) (A)

When a service with a one month minimum period is discontinued prior to the expiration of the minimum period, a one month charge will apply at the rate level in effect at the time service is discontinued. (B)

When a service with a minimum period greater than one month is discontinued prior to the expiration of the minimum period, the applicable charge will be the lesser of:

(1) the Telephone Company's total nonrecoverable costs less the net salvage value for the discontinued service, or

(2) the total monthly charges, at the rate level in effect at the time service is discontinued, for the remainder of the minimum period.

2.4.3 **Cancellation of an Order for Service**

Provisions for the cancellation of an order for service are set forth in Section 5.3.2 following.

© 2022 Frontier Communications Parent, Inc. All rights reserved.

ACCESS SERVICE

2. **General Regulations** (Cont'd)

2.4 **Payment Arrangements** (Cont'd)

2.4.4 **Reserved for Future Use**

© 2022 Frontier Communications Parent, Inc. All rights reserved.

ACCESS SERVICE

2. **General Regulations** (Cont'd)

2.4 **Payment Arrangements** (Cont'd)

2.4.4 **Reserved for Future Use** (Cont'd)

2.4.5 **Re-establishment of Service Following Fire, Flood or Other Occurrence**

(A) Nonrecurring Charges Do Not Apply

Charges do not apply for the re-establishment of service following a fire, flood or other occurrence attributed to an Act of God provided that:

(1) The service is of the same type as was provided prior to the fire, flood or other occurrence.

(2) The service is for the same customer.

(3) The service is at the same location on the same premises.

(4) The re-establishment of service begins within 60 days after Telephone Company service is available. (The 60 day period may be extended a reasonable period if the renovation of the location on the premises affected is not practical within the allotted time period).

© 2022 Frontier Communications Parent, Inc. All rights reserved.

ACCESS SERVICE

2. **General Regulations** (Cont'd)

2.4 **Payment Arrangements and Credit Allowances** (Cont'd)

2.4.5 **Re-establishment of Service Following Fire, Flood or Other Occurrence** (Cont'd)

(B) Nonrecurring Charges Apply

Nonrecurring Charges apply for establishing service at a different location on the same premises or at a different premises pending re-establishment of service at the location.

2.4.6 **Title or Ownership Rights**

The payment of rates and charges by Customers for the services offered under the provisions of this Guide does not assign, confer or transfer title or ownership rights to proposals or facilities developed or utilized, respectively, by the Telephone Company in the provision of such services.

© 2022 Frontier Communications Parent, Inc. All rights reserved.

ACCESS SERVICE

2. **General Regulations** (Cont'd)

2.4 **Payment Arrangements and Credit Allowances** (Cont'd)

2.4.7 **Access Services Provided by More Than One Telephone Company**

The Telephone Company will perform the rating and billing of Access Services under this Guide where more than one Telephone Company is involved in the provision of Access Service as set forth in (A) or (B) following. The Multiple Company Billing arrangement, as set forth in (B) following, will be used for all Special Access Services.

RESERVED

Multiple Company Billing

(A) For access services subject to Multiple Company Billing, the customer will be billed in accordance with the Exchange Carrier Standards Association's Multiple Exchange Carrier Access Billing Guidelines (MECAB) and Multiple Exchange Carrier Ordering and Design Guidelines (MECOD). The following method will be used:

(B)

(1)

© 2022 Frontier Communications Parent, Inc. All rights reserved.

ACCESS SERVICE

2. **General Regulations** (Cont'd)

2.4 **Payment Arrangements and Credit Allowances** (Cont'd)

2.4.7 **Access Services Provided by More Than One Telephone Company** (Cont'd)

(B) Multiple Company Billing (Cont'd)

Multiple Bill -The customer will receive a bill from each Telephone Company providing the access service. Multiple bills will include all charges applicable to the individual portion of the access service provided by each Telephone Company. Such bills will include the following information in accordance with the MECAB Guidelines:

- Billing Account Reference (BAR)
- Billing Account Cross Reference (BACR)
- Billing Account Number (BAN)
- End Office NPA/NXX or End Office CLLI Code
- Common EC Circuit Identifiers (Special Access)
- Billing Percentages as listed in NECA Tariff No. 4
- Percent Interstate Usage (PIU)
- Usage "from" and "through" dates

The choice of billing method shall be determined by the Telephone Companies involved. The Telephone Company will notify the customer which method applies when the customer orders access service and will provide the customer thirty days' notice in the event that the billing method is changed.

(2) Reserved

© 2022 Frontier Communications Parent, Inc. All rights reserved.

ACCESS SERVICE

2. **General Regulations** (Cont'd)

2.4 **Payment Arrangements and Credit Allowances** (Cont'd)

2.4.7 **Access Services Provided by More Than One Telephone Company** (Cont'd)

(B) Multiple Company Billing (Cont'd)

(3) For Special Access Services Telephone Company will determine the applicable charges as follows:

Determine the distance in airline miles using the V&H method set forth in National Exchange Carrier Association Tariff No. 4 between the locations involved; i.e., the serving wire center associated with a customer designated premise and an end office, or a Telephone Company hub, or two Telephone Company hubs, a hub to an end office or a hub to a Telephone Company access tandem.

ACCESS SERVICE

2. **General Regulations** (Cont'd)

2.4 **Payment Arrangements and Credit Allowances** (Cont'd)

2.4.7 **Access Services Provided by More Than One Telephone Company** (Cont'd)

(B) Multiple Company Billing (Cont'd)

(3) (Cont'd)

(b) The airline distance in miles developed in (a) preceding will be multiplied by the Special Access Circuit Mileage-Per Mile or Switched Access Direct-Trunked Transport Mileage rate element times the billing percentage to determine the appropriate charges. The billing percentage is that portion of circuit mileage to be billed by each company involved in providing Access Services to the customer. Billing percentages are listed in National Exchange Carrier Association Tariff FCC No. 4.

(c) For Special Access, the total Circuit Mileage charges shall be the Circuit Mileage-Per Mile charge determined in (b) preceding plus the Circuit Mileage-Fixed charges. The Circuit Mileage-Fixed charge is always applied in full, once per circuit mileage facility, whether the Telephone Company provides one, or more than one, circuit mileage facility termination(s). The Circuit Mileage-Fixed rate does not apply when the Telephone Company provides an intermediate portion of a circuit mileage facility and no circuit mileage terminations.

(d) All other appropriate recurring and nonrecurring charges in each Telephone Company's access tariff are applicable. The Special Access Nonrecurring Charge for circuit installation applies in full once per Circuit Termination provided by the Telephone Company.

(e) The Interconnection Charge for Switched Transport shall be billed by the Telephone Company in whose territory the end office is located.

© 2022 Frontier Communications Parent, Inc. All rights reserved.

ACCESS SERVICE

2. **General Regulations** (Cont'd)

2.4 **Payment Arrangements and Credit Allowances** (Cont'd)

2.4.7 **Access Services Provided by More Than One Telephone Company** (Cont'd)

(B) **Multiple Company Billing** (Cont'd)

(5)

(6)

(7)

(8) For Dedicated SONET Optical Transport Service (DSOTS), as set forth in Section 20.1 following, and Dedicated SONET Ring (DSR), as set forth in Section 20.2 following, where the ring is provided within the operating territories of two or more telephone companies, ring mileage is determined using the methodology below. The following illustrates the methodology used to determine DSOTS ring mileage.

Step 1 – Calculate the total ring mileage by summing the mileage connecting all locations and devices (Node A to SWC CDL B) + (SWC CDL B to Node CDL B) + (Node CDL B to CO Node C) + (CO Node C to Node CDL D) + (Node CDL D to SWC CDL D) + (SWC Node D to Node A), If the total ring mileage includes a fraction of a mile, the value is rounded up to the next full mile.

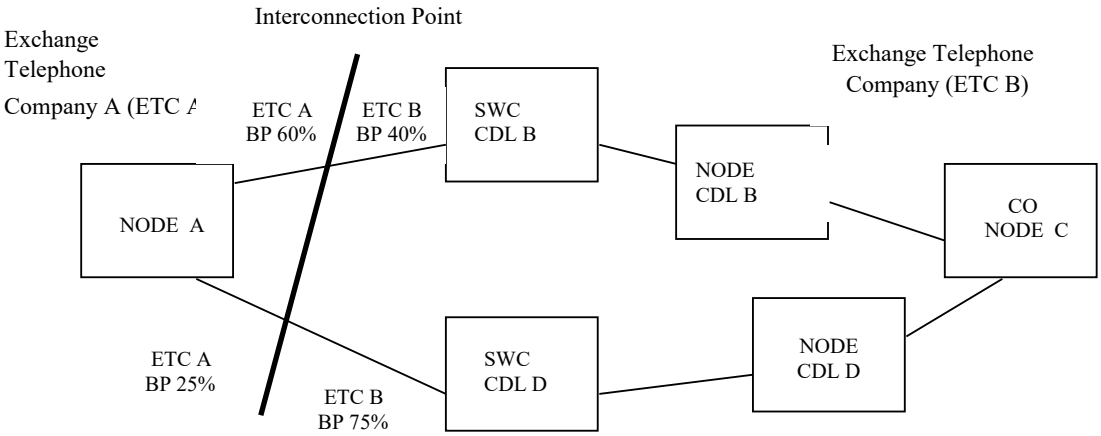

© 2022 Frontier Communications Parent, Inc. All rights reserved.

ACCESS SERVICE

2. **General Regulations** (Cont'd)

2.4 **Payment Arrangements and Credit Allowances** (Cont'd)

2.4.7 **Access Services Provided by More Than One Telephone Company** (Cont'd)

(B) **Multiple Company Billing** (Cont'd)

(8) (Cont'd)

Step 2 – Determine the Telephone Company (ETCB) portion of the total ring mileage by first multiplying the mileage between Node A and the SWC of CDL B by the billing percentage (BP) for ETC B (40%) and between the SWC CDL D and Node A by the BP for ETCB (75%) and adding these adjusted mileage segments to the remaining mileage segments on the ring (SWC CDL B to Node CDL B) + (Node CDL B to CO Node C) + (CO Node C to Node CDL D) + (Node CDL D to SWC CDL D). If this ring mileage calculation includes a fraction of a mile, the value is rounded up to the next full mile. If the Telephone Company (ETCB) portion of the total ring mileage is 20 miles or less, utilize the process set forth in Step 3 following to determine the mileage charges for each exchange telephone company involved. If the Telephone Company (ETCB) portion of the total ring mileage is 21 miles or over, utilize the process set forth in Step 4 through Step 6 following to determine the mileage charges for each exchange telephone company involved.

Step 3 – Develop a Ring BP by dividing the Telephone Company (ETCB) portion of the total ring miles determined in Step 2 by the total ring miles determined in Step 1. Next apply this Ring BP to the total ring mileage for ECTB determined in Step 2 and apply the rates set forth in 20.1(K) for 1-20 total ring miles.

Step 4 - If the Telephone Company (ETCB) portion of the total ring miles determined in Step 2 is 21 miles or more, apply the 1-20 ring mileage rate set forth in 20.1(K) following to the first 20 miles.

Step 5 - Determine the remaining Telephone Company (ETCB) portion of the total ring mileage by subtracting 20 miles from the Telephone Company (ETCB) portion of the total ring mileage determined in Step 2. Next apply the rates set forth in 20.1(K) for mile 21 and over up to the Telephone Company (ETCB) portion of the total ring miles.

Step 6 –The total charge for ring mileage is the sum of the charges for the first 20 miles calculated in Step 4 plus the remaining miles billed at the rate for 21 miles and over as calculated in this Step 5.

© 2022 Frontier Communications Parent, Inc. All rights reserved.

ACCESS SERVICE

2. General Regulations (Cont'd)

2.5 Connections

2.5.1 General

Equipment and Systems (i.e., terminal equipment, multiline terminating systems and communications systems) may be connected with Special Access Service furnished by the Telephone Company where such connection or interconnection is made in accordance with the provisions specified in Technical Reference PUB AS No. 1, Issue II, and in Section 2.1 preceding.

2.5.2 Standard Access Service Connections

Access services are provided by means of wire, fiber optics, radio or any other suitable technology or a combination thereof. Special Access service connections are made directly or through a Telephone Company hub where bridging or multiplexing functions are performed. These connections can either be analog or digital.

© 2022 Frontier Communications Parent, Inc. All rights reserved.

ACCESS SERVICE

2. **General Regulations** (Cont'd)

2.6 **Definitions**

Certain terms used herein are defined as follows:

Access Area

The term "Access Area" denotes a specific calling area serviced by one or more Central Offices associated with the various Switched Access Services offered under this Guide. The size and configuration of the Access Area a customer obtains is dependant upon the Feature Group type and the specific characteristics of the Central Office or Telephone Company Access Tandem Network in which the connection is made.

Access Code

The term "Access Code" applies to Switched Access Service. It denotes a uniform seven digit code dialed by an end user to access an Interexchange Carrier's facilities. The five or seven digit FGD code has the form 101XXXX, and the seven digit FGB code has the form 950-XXXX.

Access Minutes

The term "Access Minutes" denotes that usage of exchange facilities in interstate or foreign service for the purpose of calculating chargeable usage. On the originating end of an interstate or foreign call, usage is measured from the time the originating end user's call is delivered by the Telephone Company to and acknowledged as received by the customer's facilities connected with the originating exchange. On the terminating end of an interstate or foreign call, usage is measured from the time the call is received by the end user in the terminating exchange. Timing of usage at both originating and terminating ends of an interstate or foreign call shall terminate when the calling or called party disconnects, whichever event is recognized first in the originating and terminating exchanges, as applicable.

Access Tandem

The term "Access Tandem" denotes a Telephone Company switching system that provides a concentration and distribution function for originating and/or terminating traffic between end offices and a customer's premises.

© 2022 Frontier Communications Parent, Inc. All rights reserved.

ACCESS SERVICE

2. **General Regulations** (Cont'd)

2.6 **Definitions** (Cont'd)

Access Tandem Network

The term "Access Tandem Network" denotes the network of trunk groups that provide a concentration and distribution function for originating and/or terminating Switched Access traffic between a single Telephone Company access tandem and Telephone Company subtending end offices.

Add/Drop Multiplexing

The term "Add/Drop Multiplexing" denotes a multiplexing function that allows lower level signals to be added or dropped with the remaining traffic continuing through the network.

Agent

The term "Agent," as used in Section 8.5 of this Guide, is defined as that person or entity that the Telephone Company acknowledges as the possessor of authority to make decisions pertaining to instrument placement, subscription authorization, and access or usage control of Pay Telephone Service or, that person or entity duly authorized to act in that capacity by the owner of the premises.

Aggregator

The term "Aggregator" denotes any individual, partnership, association, joint-stock company, trust or corporation that, in the ordinary course of its operations, makes telephones available to the public or to transient users of its premises, for interstate telephone calls using a provider of operator services.

Answer Message

The term "Answer Message" denotes an SS7 message sent in the backward direction to indicate that the call has been answered.

© 2022 Frontier Communications Parent, Inc. All rights reserved.

ACCESS SERVICE

2. **General Regulations** (Cont'd)

2.6 **Definitions** (Cont'd)

Answer/Disconnect Supervision

The term "Answer/Disconnect Supervision" denotes the transmission of the switch trunk equipment supervisory signal (off-hook or on-hook) to the customer's point of termination as an indication that the called party has answered or disconnected.

Attenuation Distortion

The term "Attenuation Distortion" denotes the difference in loss at specified frequencies relative to the loss at 1004 Hz, unless otherwise specified.

Balance (100 Type) Test Line

The term "Balance (100 Type) Test Line" denotes an arrangement in an end office which provides for balance and noise testing.

Basic Service Element

The term "Basic Service Element (BSE)" denotes an unbundled service option available only with Basic Serving Arrangements.

Basic Serving Arrangement

The term "Basic Serving Arrangement (BSA)" denotes a category of Switched Access Service differentiated by technical characteristics, e.g., line side versus trunk side connection at the Telephone Company's first point of switching.

© 2022 Frontier Communications Parent, Inc. All rights reserved.

ACCESS SERVICE

2. **General Regulations** (Cont'd)

2.6 **Definitions** (Cont'd)

Bit

The term "Bit" denotes the smallest unit of information in the binary system of notation.

Business Day

The term "Business Day" denotes the times of day that a company is open for business. Generally, in the business community, these are 8:00 or 9:00 A.M. to 5:00 or 6:00 P.M., respectively, with an hour for lunch, Monday through Friday, resulting in a standard forty (40) hour work week. However, Business Day hours for the Telephone Company may vary based on company policy, union contract and location. To determine such hours for an individual company, or company location, contact the issuing officer at the address shown on Title Page 1.

Busy Hour Minutes of Capacity (BHMC)

The term "Busy Hour Minutes of Capacity (BHMC)" denotes the customer specified maximum amount of Switched Access Service access minutes the customer expects to be handled in an end office switch during any hour in an 8:00 A.M. to 11:00 P.M. period for the Switched Access Arrangement ordered. This customer furnished BHMC quantity is the input data the Telephone Company uses to determine the number of transmission paths or facility requirements for the Switched Access Arrangement ordered.

© 2022 Frontier Communications Parent, Inc. All rights reserved.

ACCESS SERVICE

2. **General Regulations** (Cont'd)

2.6 **Definitions** (Cont'd)

Call

The term "Call" denotes a customer attempt for which the complete address code (e.g., 0-, 911, or 10 digits) is provided to the serving dial tone office.

Carrier or Common Carrier

See Interexchange Carrier.

Carrier Identification Code

The term "Carrier Identification Code (CIC)" denotes the uniform access code associated with a specific Interexchange Carrier.

Carrier Identification Parameter

The term "Carrier Identification Parameter (CIP)" denotes a field in the SS7 Initial Address Message (IAM) that identifies and transmits the CIC information in a forward direction to an IC customer.

CCS

The term "CCS" denotes a hundred call seconds, which is a standard unit of traffic load that is equal to 100 seconds of usage or capacity of a group of servers (e.g., trunks).

Cellular Mobile Carrier (CMC)

The term "Cellular Mobile Carrier (CMC)" denotes a Common Carrier authorized by the Federal Communications Commission to provide cellular mobile radio telecommunications services.

© 2022 Frontier Communications Parent, Inc. All rights reserved.

ACCESS SERVICE

2. **General Regulations** (Cont'd)

2.6 **Definitions** (Cont'd)

Central Office

The term "Central Office" denotes a local Telephone Company switching system where Telephone Exchange Service customer station loops are terminated for purposes of interconnection to each other and to trunks.

Central Office Prefix

The term "Central Office Prefix" denotes the first three digits (NXX) of the seven digit telephone number assigned to a customer's Telephone Exchange Service when dialed on a local basis.

Centralized Automatic Reporting on Trunks Testing

The term "Centralized Automatic Reporting on Trunks Testing" denotes a type of testing which includes the capacity for measuring operational and transmission parameters.

© 2022 Frontier Communications Parent, Inc. All rights reserved.

ACCESS SERVICE

2. **General Regulations** (Cont'd)

2.6 **Definitions** (Cont'd)

Channel Service Unit

The term "Channel Service Unit" denotes customer premises equipment which performs one or more of the following functions: termination of a digital facility, regeneration of digital signals, detection and/or correction of signal format error, and remote loop back.

Channelize

The term "Channelize" denotes the process of multiplexing-demultiplexing wider bandwidth or higher speed channels into narrow band-width or lower speed channels.

Circuit(s)

The term "Circuit(s)" denotes an electrical or photonic, in the case of fiber optic-based transmission systems, communications path between two or more points of termination.

Circuit Code

The term "Circuit Code" denotes the service class routing of an SS7 call that indicates the interexchange carrier trunk group to which the traffic will be routed (e.g., 0+, 0-, 500, 900, etc.)

C-Message Noise

The term "C-Message Noise" denotes the frequency weighted average noise within an idle voice channel. The frequency weighing, called C-message, is used to simulate the frequency characteristic of the 500-type telephone set and the hearing of the average subscriber.

C-Notched Noise

The term "C-Notched Noise" denotes the C-message frequency weighted noise on a voice channel with a holding tone, which is removed at the measuring end through a notch (very narrow band) filter.

© 2022 Frontier Communications Parent, Inc. All rights reserved.

ACCESS SERVICE

2. **General Regulations** (Cont'd)

2.6 **Definitions** (Cont'd)

Coin Station

The term "Coin Station" denotes a location where Telephone Company equipment is provided in a public or semipublic place where Telephone Company customers can originate telephone communications and pay the applicable charges by inserting coins into the equipment.

Concatenated

The term "Concatenated" denotes the linking together of various data structures, e.g., two bandwidths joined to form a single bandwidth.

Common Channel Signaling System 7 Network (CCS7)

The term "Common Channel Signaling System 7 Network (CCS7)" denotes a dedicated out-of-band signaling network which utilizes Signaling System 7 (SS7) protocol to provide call handling and data base access services.

© 2022 Frontier Communications Parent, Inc. All rights reserved.

ACCESS SERVICE

2. **General Regulations** (Cont'd)

2.6 **Definitions** (Cont'd)

Common Line

The term "Common Line" denotes a line, trunk, pay telephone line or other facility provided under the general and/or local exchange service tariffs of the Telephone Company, terminated on a central office switch. A common line-residence is a line or trunk provided under the residence regulations of the general and/or local exchange service tariffs. A common line-business is a line provided under the business regulations of the general and/or local exchange service tariffs.

Communications System

The term "Communications System" denotes channels and other facilities which are capable of communications between terminal equipment provided by other than the Telephone Company.

Competitive County (N)

The term “Competitive County” denotes that the geographic unit of a county or county-equivalent that passes or has passed a competitive market test specified by the FCC. Competitive County also denotes a county or county-equivalent that failed a competitive market test specified by the FCC, but was granted Phase II, Level 2 pricing flexibility prior to June 1, 2017. (N)

Customer(s)

The term "Customer(s)" denotes any individual, partnership, association, joint-stock company, trust corporation, or governmental entity or other entity which subscribes to the services offered under this Guide.

Data Transmission (107 Type) Test Line

The term "Data Transmissions (107 Type) Test Line" denotes an arrangement which provides for a connection to a signal source which provides test signals for one-way testing of data and voice transmission parameters.

Decibel

The term "Decibel" denotes a unit used to express relative differences in power, usually between acoustic or electric signals, equal to ten (10) times the common logarithm of the ratio of two signal powers.

Decibel Reference Noise C-Message Weighting

The term "Decibel Reference Noise C-Message Weighting" denotes noise power measurements with C-Message Weighting in decibels relative to a reference 1000 Hz tone of 90 dB below 1 milliwatt.

© 2022 Frontier Communications Parent, Inc. All rights reserved.

2. **General Regulations** (Cont'd)

2.6 **Definitions** (Cont'd)

Decibel Reference Noise C-Message Referenced to 0

The term "Decibel Reference Noise C-Message Referenced to 0" denotes noise power in "Decibel Reference Noise C-Message Weighing" referred to or measured at a zero transmission level point.

Disconnect Non-Recurring Charge (N)
In addition to any other charges associated with discontinuance of services, the Telephone Company will charge a disconnect non-recurring charge to discontinue services. This charge applies on a per circuit basis. (N)

Dual Tone Multifrequency Address Signaling

The term "Dual Tone Multifrequency Address Signaling" denotes a type of signaling that is an optional feature of Switched Access Feature Group A and BSA-A. It may be utilized when Feature Group A or BSA-A is being used in the terminating direction (from the point of termination with the customer to the local exchange and office). An office arranged for Dual Tone Multifrequency Signaling would expect to receive address signals from the customer in the form of Dual Tone Multifrequency signals.

Echo Control

The term "Echo Control" denotes the control of reflected signals in a telephone transmission path.

Echo Path Loss

The term "Echo Path Loss" denotes the measure of reflected signal at a 4-wire point of interface without regard to the send and receive Transmission Level Point.

Echo Return Loss

The term "Echo Return Loss" denotes a frequency weighted measure of return loss over the middle of the voiceband (approximately 500 to 2500 Hz), where talker echo is most annoying.

Effective 2-Wire

The term "Effective 2-Wire" denotes a condition which permits the simultaneous transmission in both directions over a channel, but it is not possible to insure independent information transmission in both directions. Effective 2-wire channels may be terminated with 2-wire or 4-wire interfaces.

© 2024 Frontier Communications Parent, Inc. All rights reserved.

2. **General Regulations** (Cont'd)

2.6 **Definitions** (Cont'd)

Effective 4-Wire

The term "Effective 4-Wire" denotes a condition which permits the simultaneous independent transmission of information in both directions over a channel. The method of implementing effective 4-wire transmission is at the discretion of the Telephone Company (physical, time domain, frequency-domain separation or echo cancellation techniques). Effective 4-wire channels may be terminated with a 2-wire interface at the customer's premises. However, when terminated 2-wire, simultaneous independent transmission cannot be supported because the two wire interface combines the transmission paths into a single path.

End Office Switch

The term "End Office Switch" denotes a local Telephone Company switching system where Telephone Exchange Service customer station loops are terminated for purposes of interconnection to each other and to trunks. Included may be Remote Switching Modules and Remote Switching Systems served by a host office in a different wire center.

End User

The term "End User" denotes any customer of interstate or foreign telecommunications service that is not a carrier, except that a carrier shall be deemed to be an "end user" to the extent that such carrier uses a telecommunications service for administrative purposes, without making such service available to others, directly or indirectly.

© 2022 Frontier Communications Parent, Inc. All rights reserved.

ACCESS SERVICE

2. **General Regulations** (Cont'd)

2.6 **Definitions** (Cont'd)

Entry Switch

See First Point of Switching.

Envelope Delay Distortion

The term "Envelope Delay Distortion" denotes a measure of the linearity of the phase versus frequency of a channel.

Equal Level Echo Path Loss

The term "Equal Level Echo Path Loss" (ELEPL) denotes the measure of Echo Path Loss (EPL) at a 4-wire interface which is corrected by the difference between the send and receive Transmission Level Point (TLP). [ELEPL = TLP (send) + TLP (receive)]

Exchange

The term "Exchange" denotes a unit generally smaller than a local access and transport area, established by the Telephone Company for the administration of communications service in a specified area which usually embraces a city, town or village and its environs. It consists of one or more central offices together with the associated facilities used in furnishing communications service within the area. One or more designated exchanges comprise a given local access and transport area.

Existing Suitable Space

The term "Existing Suitable Space" denotes a space in which ac/dc power, heat and air conditioning, battery and generator back-up power, and other requirements necessary for provision of wire center or access tandem equipment currently exists.

© 2022 Frontier Communications Parent, Inc. All rights reserved.

ACCESS SERVICE

2. General Regulations (Cont'd)

2.6 Definitions (Cont'd)

Exit Message

The term "Exit Message" denotes an SS7 message sent to an end office by the Telephone Company tandem switch to mark the Connect Time when the Telephone Company's tandem switch sends an Initial Address Message to a customer.

Expected Measured Loss

The term "Expected Measured Loss" denotes a calculated loss which specifies the end-to-end 1004-Hz loss on a terminated test connection between two readily accessible manual or remote test points. It is the sum of the inserted connection loss and test access loss including any test pads.

Extended Area Service

The term "Extended Area Service" denotes a telephone exchange service in which a customer in one exchange can call a local number in another exchange that is part of the extended area without paying a toll charge.

Extensible Markup Language (XML)

The term "Extensible Markup Language (XML)" denotes a simple, very flexible text format that is used in the exchange of a wide variety of data on the Web and elsewhere.

Facility

The term "Facility" denotes generically the various transmission media used for the transmission of telecommunications service. This included, but is not limited to, cable (copper pair, coaxial and fiber optic) and microwave radio equipment.

Field Identifier

The term "Field Identifier" denotes two to four characters that are used on service orders to convey specific instructions. Field Identifiers may or may not have associated data. Selected Field Identifiers are used in Telephone Company billing systems to generate nonrecurring charges.

First Come - First Served

The term "First Come - First Served" denotes a procedure followed by the Telephone Company to process fully completed Access Orders according to the sequence in which they are received.

© 2022 Frontier Communications Parent, Inc. All rights reserved.

ACCESS SERVICE

2. **General Regulations** (Cont'd)

2.6 **Definitions** (Cont'd)

First Point of Switching

The term "First Point of Switching" denotes the first Telephone Company location at which switching occurs on the terminating path of a call proceeding from the customer premises to the terminating end office and, at the same time, the last Telephone Company location at which switching occurs on the originating path of a call proceeding from the originating end office to the customer premises.

Flexible Automatic Number Identification (FLEX ANI)

The term "Flexible Automatic Number Identification" denotes an optional feature or Basic Service Element that provides additional values for the information indicator digits available with the ANI feature on originating calls. These additional digits identify the type of line that is originating the call for billing, screening and routing purposes.

© 2022 Frontier Communications Parent, Inc. All rights reserved.

ACCESS SERVICE

2. **General Regulations** (Cont'd)

2.6 **Definitions** (Cont'd)

Frame

The term "Frame" denotes a group of data bits, in specific format, with a flag at either end to indicate the beginning and end of the frame. The defined format enables network equipment to recognize the meaning and purpose of specific bits.

Frequency Shift

The term "Frequency Shift" denotes the change in the frequency of a tone as it is transmitted over a channel.

© 2022 Frontier Communications Parent, Inc. All rights reserved.

ACCESS SERVICE

2. **General Regulations** (Cont'd)

2.6 **Definitions** (Cont'd)

Grandfathered

The term "Grandfathered" denotes Terminal Equipment, Multiline Terminating Systems and Protective Circuitry directly connected to the facilities utilized to provide services under the provisions of this Guide, and which are considered grandfathered under Part 68 of the F.C.C.'s Rules and Regulations.

Host Office

The term "Host Office" denotes an electronic switching system which provides call processing capabilities for one or more Remote Switching Modules or Remote Switching Systems.

IC CDL

The Term "IC CDL" denotes a Customer Designated Location (CDL) where facilities for interstate access is terminated and connected to an Interexchange Carrier. (N)

Immediately Available Funds

The term "Immediately Available Funds" denotes a corporate or personal check drawn on a bank account and funds which are available for use by the receiving party on the same day on which they are received and include U.S. Federal Reserve bank wire transfers, U.S. Federal Reserve notes (paper cash), U.S. coins, U.S. Postal Money Orders and New York Certificates of Deposit.

Impedance Balance

The term "Impedance Balance" denotes the method of expressing Echo Return Loss and Singing Return Loss at a 4-wire interface whereby the gains and/or loss of the 4 wire portion of the transmission path, including the hybrid, are not included in the specification.

Impulse Noise

The term "Impulse Noise" denotes any momentary occurrence of the noise on a channel over a specified level threshold. It is evaluated by counting the number of occurrences which exceed the threshold.

Individual Case Basis

The term "Individual Case Basis" denotes a condition in which the regulations, if applicable, rates and charges for an offering under the provisions of this Guide are developed based on the circumstances in each case.

© 2022 Frontier Communications Parent, Inc. All rights reserved.

ACCESS SERVICE

2. **General Regulations** (Cont'd)

2.6 **Definitions** (Cont'd)

Initial Address Message (IAM)

The term "Initial Address Message (IAM)" denotes an SS7 message sent in the forward direction to initiate trunk set up with the busying of an outgoing trunk which carries the information about that trunk along with other information relating to the routing and handling of the call to the next switch.

Inserted Connection Loss

The term "Inserted Connection Loss" denotes the 1004 H2 power difference (in dB) between the maximum power available at the originating end and the actual power reaching the terminating end through the inserted connection.

Interconnection

The term "Interconnection" denotes the termination of a customer's basic transmission facilities, including optical terminating equipment and multiplexers at or near Telephone Company wire center or Telephone Company access tandem. Interconnection may be provided as either physical or virtual.

Interconnection Point

The term "Interconnection Point" denotes physical EIS arrangements as the point where the customer-owned cable facilities connect to the Telephone Company termination equipment. The interconnection point for virtual EIS arrangements is the demarcation between ownership of the cable facilities.

© 2022 Frontier Communications Parent, Inc. All rights reserved.

ACCESS SERVICE

2. **General Regulations** (Cont'd)

2.6 **Definitions** (Cont'd)

Interexchange Carrier (IC) or Interexchange Common Carrier

The terms "Interexchange Carrier" (IC) or Interexchange Common Carrier" denotes any individual, partnership, association, joint-stock company, trust, governmental entity or corporation engaged for hire in interstate or foreign communications by wire or radio, between two or more exchanges.

Intermodulation Distortion

The term "Intermodulation Distortion" denotes a measure of the nonlinearity of a channel. It is measured using four tones, and evaluating the ratios (in dB) of the transmitted composite four-tone signal power to the second-order products of the tones (R2), and the third-order products of the tones (R3).

Interstate Communications

The term "Interstate Communications" denotes both interstate and foreign communications.

Intrastate Communications

The term "Intrastate Communications" denotes any communications within a state subject to oversight by a state regulatory commission as provided by the laws of the state involved.

Line Side Connection

The term "Line Side Connection" denotes a connection of a transmission path to the line side of a local exchange switching system.

© 2022 Frontier Communications Parent, Inc. All rights reserved.

ACCESS SERVICE

2. **General Regulations** (Cont'd)

2 .6 **Definitions** (Cont'd)

Local Access and Transport Area

The term "Local Access and Transport Area" (LATA) denotes a geographic area established by the Telephone Company for the provision and administration of its communications service. It encompasses one or more Telephone Company designated exchanges which are configured in relative proximity to one another and may be reconfigured by the Telephone Company in the normal operation of its business. As used herein, the term LATA refers only to these Telephone Company designated exchanges and does not necessarily have any predetermined association with the term LATA used by other exchange carriers.

Logical Channel

The term "Logical Channel" denotes a communication channel which allows two-way simultaneous transmission of data packets through the network. No circuit capability is preassigned to a logical channel. Capacity is made available as the data is transmitted. Each virtual connection utilizes one logical channel.

© 2022 Frontier Communications Parent, Inc. All rights reserved.

ACCESS SERVICE

2. **General Regulations** (Cont'd)

2 .6 **Definitions** (Cont'd)

Loop Around Test Line

The term "Loop Around Test Line" denotes an arrangement utilizing a Telephone Company central office to provide a means to make certain two-way transmission tests on a manual basis. This arrangement has two central office terminations,each reached by means of separate telephone numbers and does not require any specific customer premises equipment. Equipment subject to this test arrangement is at the discretion of the customer.

Loss Deviation

The term "Loss Deviation" denotes the variation of the actual loss from the designed value.

© 2022 Frontier Communications Parent, Inc. All rights reserved.

ACCESS SERVICE

2. **General Regulations** (Cont'd)

2.6 **Definitions** (Cont'd)

Message

The term "Message" denotes a "call" as defined preceding.

Milliwatt (102 Type) Test Line

The term "Milliwatt (102 Type) Test Line" denotes an arrangement in an end office which provides a 1004 Hz tone at 0 dBm0 for one-way transmission measurements towards the customer's premises from the Telephone Company end office.

Mobile Telephone Switching Office (MTSO)

The term "Mobile Telephone Switching Office (MTSO)" denotes a Cellular Mobile Carrier (CMC) Switching System that is used to originate or terminate calls on the CMC network, or originate or terminate calls between the CMC and the public switched telephone network.

Network Control Signaling

The term "Network Control Signaling" denotes the transmission of signals used in the telecommunications system which perform functions such as supervision (control, status, and charge signals), address signaling (e.g., dialing), calling and called number identifications, rate of flow, service selection error control and audible tone signals (call progress signals indicating re-order or busy conditions, alerting, coin denominations, coin collect and coin return tones) to control the operation of the telecommunications system.

Node

The term "Node" denotes a SONET ring service element that designates either a customer designated location or a Telephone Company wire center location on the SONET ring. It also denotes the location/address of where a channelized service originates or terminates on a ring.

© 2022 Frontier Communications Parent, Inc. All rights reserved.

ACCESS SERVICE

2. **General Regulations** (Cont'd)

2.6 **Definitions** (Cont'd)

Nonsynchronous Test Line

The term "Nonsynchronous Test Line" denotes an arrangement in step-by-step end offices which provides operational tests which are not as complete as those provided by the synchronous test lines, but can be made more rapidly.

North American Numbering Plan

The term "North American Numbering Plan" denotes a three digit area (Numbering Plan Area) code and a seven-digit telephone number made up of a three-digit Central office code plus a four-digit station number.

© 2022 Frontier Communications Parent, Inc. All rights reserved.

ACCESS SERVICE

2. **General Regulations** (Cont'd)

2.6 **Definitions** (Cont'd)

Off-hook

The term "off-hook" denotes the active condition of Switched Access or a Telephone Exchange Service Line.

On-hook

The term "On-hook" denotes the idle condition of Switched Access or a Telephone Exchange Service line.

Open Circuit Test Line

The term "Open Circuit Test Line" denotes an arrangement in an end office which provides an ac circuit termination of a trunk or line by means of an inductor of several Henries.

Optical Carrier Rate (OC-N)

The term "OC-N" denotes an Optical Networking transmission signal, speed, line rate, commonly referred to as follows:

OC-N Rate	Bandwidth Capacity
OC-1	51.84 Mbps
OC-3	155.52 Mbps
OC-12	622.08 Mbps
OC-24	1.25 Gbps
OC-48	2.488 Gbps

© 2022 Frontier Communications Parent, Inc. All rights reserved.

ACCESS SERVICE

2. **General Regulations** (Cont'd)

2.6 **Definitions** (Cont'd)

Originating Direction

The term "Originating Direction" denotes the use of access service for the origination of calls from an End User Premises to an IC Premises.

OZZ Code

The term "OZZ Code" denotes the service class routing code of a multifrequency (MF) call that indicates the interexchange carrier trunk group to which the traffic will be routed (e.g., 0+, 0-, 500, 900, etc.).

Pay Telephone

The term "Pay Telephone" denotes Telephone Company provided instruments and related facilities that are available to the general public for public convenience and necessity, including public and semipublic telephones, and coinless telephones.

Payload

The term "Payload" denotes the portion of the SONET signal available to carry service signals such as DS0, DS1, and DS3.

Phase Jitter

The term "Phase Jitter" denotes the unwanted phase variations of a signal.

.

© 2022 Frontier Communications Parent, Inc. All rights reserved.

ACCESS SERVICE

2. **General Regulations** (Cont'd)

2.6 **Definitions** (Cont'd)

Physical EIS

The term "Physical EIS" denotes an offering that enables customers to place equipment needed to terminate basic transmission facilities, including optical terminating equipment and multiplexers, within or upon the Telephone Company's wire center or Telephone Company access tandem buildings, use such equipment to connect customer's fiber optic systems or microwave radio transmission facilities (where reasonably feasible) with the local exchange carrier's equipment and facilities used to provide interstate switched and special access services.

Plant Test Date

The term "Plant Test Date" denotes the date on which installation is completed and the Telephone Company to customer testing can begin.

Point of Termination

The term "Point of Termination" denotes the point of demarcation at a customer-designated premises at which the Telephone Company's responsibility for the provision of Access Service ends.

Premises

The term "Premises" denotes a building or buildings on continuous property (except Railroad Right-of-Way, etc.) not separated by a public highway.

Release Message

The term "Release Message" denotes an SS7 Message sent in either direction to indicate that a specific circuit is being released.

© 2022 Frontier Communications Parent, Inc. All rights reserved.

ACCESS SERVICE

2. **General Regulations** (Cont'd)

2.6 **Definitions** (Cont'd)

Remote Switching Modules and/or Remote Switching Systems

The term "Remote Switching Modules and/or Remote Switching Systems" denotes remotely controlled electronic end office switches which obtain their call processing capability from an ESS-type Host Office. The Remote Switching Modules and/or Remote Switching Systems cannot accommodate direct trunks to an IC.

Return Loss

The term "Return Loss" denotes a measure of the similarity between the two impedances at the junction of two transmission paths. The higher the return loss, the higher the similarity.

© 2022 Frontier Communications Parent, Inc. All rights reserved.

ACCESS SERVICE

2. **General Regulations** (Cont'd)

2.6 **Definitions** (Cont'd)

Registered Equipment

The term "Registered Equipment" denotes the customer's premises equipment which complies with and has been approved within the Registration Provisions of Part 68 of the FCC's Rules and Regulations.

Service Control Point

The term "Service Control Point (SCP)" denotes an SS7 network control interface element between the Telephone Company's SS7 network and one or more data bases.

Secure Socket Layer (SSL)

The term "Secure Socket Layer ("SSL)" denotes a security protocol that provides data encryption, server authentication, message integrity, and optional client authentication for a TCP/IP connection.

Service Date

The term "Service Date" denotes the date that the service is made available to the customer. A confirmed ASR is required to establish a service date.

Service Switching Point (SSP)

The term "Service Switching Point" (SSP) denotes a signal point equipped with the ability to halt call process, formulate and send a SS7 query to a remote location and route the call based on information contained in the response.

Serving Wire Center

That Telephone Company designated wire center serving the customer's designated premises and used for mileage measurement to determine local transport or circuit mileage charges for Access Service.

Seven Digit Manual Test Line

The term "Seven Digit Manual Test Line" denotes an arrangement which allows the Customer to select balance, milliwatt and synchronous test lines by manually dialing a seven digit number over the associated access connection.

Shortage of Facilities or Equipment

The term "Shortage of Facilities or Equipment" denotes a condition which occurs when the Telephone Company does not have appropriate cable, switching capacity, bridging or, multiplexing equipment, etc., necessary to provide the Access service requested by the customer.

© 2022 Frontier Communications Parent, Inc. All rights reserved.

ACCESS SERVICE

2. **General Regulations** (Cont'd)

2.6 **Definitions** (Cont'd)

Short Circuit Test Line

The term "Short Circuit Test Line" denotes an arrangement in an end office which provides for an ac short circuit termination of a trunk or line by means of a capacitor of at least four microfarads.

Signal-to-C-Notched Noise Ratio

The Term "Signal-to-C-Notched Noise Ratio" denotes the ratio in dB of a test signal to the corresponding C-Notched Noise.

Signaling Point

The term "Signaling Point (SP)" denotes an SS7 network interface element capable of originating and/or terminating SS7 messages.

Signaling System 7 (SS7)

The term "Signaling System 7 (SS7)" denotes the layered protocol used for standardized common channel signaling in the United States.

Signal Transfer Point (STP)

The term "Signal Transfer Point (STP)" denotes a packet switch which provides access to the Telephone Company's SS7 network and performs SS7 message signal routing and screening. The technical interface specifications, transmission specifications, and diversity requirements for interconnecting to the Telephone Company's SS7 network at the STP are as described in Technical Reference GR-905-CORE, Issue 11.

Signal Transfer Point (STP) Port

The term "Signal Transfer Point (STP) Port" denotes the physical point of termination and interconnection to the STP.

Singing Return Loss

The term "Singing Return Loss" denotes the frequency weighted measure of return loss at the edges of the voiceband (200 to 500 Hz and 2500 to 3200 Hz), where singing (instability) problems are most likely to occur.

© 2022 Frontier Communications Parent, Inc. All rights reserved.

ACCESS SERVICE

2. **General Regulations** (Cont'd)

2.6 **Definitions** (Cont'd)

SONET

The term "SONET" (Synchronous Optical Network) denotes a family of fiber optic transmission bit rates starting at 51.84 Mpbs, designed to provided the flexibility needed to transport many digital signals with different capacities.

Statistical Multiplexing

The term "Statistical Multiplexing" denotes a technique in which timeslots are dynamically allocated on the basis of need rather than being predetermined. The data is typically transmitted on a first come, first served basis.

Subtending End Office of the Telephone Company Access Tandem

The term "Subtending End Office of the Telephone Company Access Tandem" denotes an end office that has final trunk group routing through the Telephone Company access tandem.

Synchronous Test Line

The term "Synchronous Test Line" denotes an arrangement in an end office which performs marginal operational tests of supervisory and ring-tripping functions equivalent information needed to perform tandem switching functions.

Synchronous Transport Signal (STS)

STS-1 has the capacity to transport up to twenty-eight (28) DS1s or one (1) DS3.

Synchronous Transport Signal (STS1)

The term “Synchronous Transport Signal” (STS1) denotes a 51.84 Mbps signal that is the electrical equivalent of the OC1 or a DS3 with additional Mbps devoted to SONET overhead information. An STS1 can carry a DS3 or 28 DS1s when specifically formatted (mapped). These DS1s may be accessed off-ring using DS3 to DS1 Multiplexing as set forth in Section 20 or at an enhanced node via a DS3 Transmux port.

© 2022 Frontier Communications Parent, Inc. All rights reserved.

ACCESS SERVICE

2. **General Regulations** (Cont'd)

2.6 **Definitions** (Cont'd)

Terminating Direction

The term "Terminating Direction" denotes the use of Access Service for the completion of calls from an IC premises to an End User Premises.

Toll VoIP-PSTN Traffic (N)(X)

The term "Toll VoIP-PSTN Traffic" denotes a customer's interexchange voice traffic exchanged with the Telephone Company in Time Division Multiplexing format over Public Switched Telephone Network (PSTN) facilities, which originates and/or terminates in Internet Protocol (IP) format. "Toll VoIP-PSTN Traffic" originates and/or terminates in IP format when it originates from and/or terminates to an end user customer of a service that requires IP-compatible customer premises equipment. (N)(X)

Transmission Measuring (105 Type) Test Line/Responder

The term "Transmission Measuring (105 Type) Test Line/Responder" denotes an arrangement in an end office which provides far-end access to a responder and permits two-way loss and noise measurements to be made on trunks from a near end office.

Transmission Path

The term "Transmission Path" denotes an electrical path capable of transmitting signals within the range of the service offering, e.g., a voice grade transmission path is capable of transmitting voice frequencies within the approximate range of 300 to 3000 Hz. A transmission path is comprised of physical or derived facilities consisting of any form or configuration of plant typically used in the telecommunications industry.

Transmuxing

The term "Transmuxing" denotes the function of a DSR DS3 Transmux port which performs a DS3 to DS1 conversion at a DSR node. The DS3 to DS1 conversions allows a single DSR DS3 Transmux port to be associated with up to twenty-eight (28) VT1.5 mapped DSR DS1 ports. Transmuxing within the DSR network retains DS1 visibility allowing for full, proactive maintenance capability of DS1 signals.

Trunk

The term "Trunk" denotes a communications path connecting two switching systems in a network, used in the establishment of an end-to-end connection.

Trunk Group

The term "Trunk Group" denotes a set of trunks which are traffic engineered as a unit for the establishment of connections between switching systems in which all of the communications paths are interchangeable.

© 2022 Frontier Communications Parent, Inc. All rights reserved.

ACCESS SERVICE

2. **General Regulations** (Cont'd)

2.6 **Definitions** (Cont'd)

Trunk Side Connection

The term "Trunk Side Connection" denotes the connection of a transmission path to the trunk side of a local exchange switching system.

Two-Wire to Four-Wire Conversion

The term "Two-Wire to Four-Wire Conversion" denotes an arrangement which converts a four-wire transmission path to a two-wire transmission path to allow a four-wire facility to terminate to a two-wire entity (e.g., a central office switch).

Uniform Service Order Code

The term "Uniform Service Order Code" denotes a three or five character alphabetic, numeric, or an alphanumeric code that identifies a specific item of service or equipment. Uniform Service Order Codes are used in the Telephone Company billing system to generate recurring rates and nonrecurring charges.

V&H Coordinates

The term "V and H Coordinates Method" denotes a method of computing airline miles between two points by utilizing an established formula which is based on the vertical and horizonal coordinates of the two points.

Virtual EIS

The term "Virtual EIS" denotes an offering that enables customers to designate or specify equipment needed to terminate basic transmission facilities, including optical terminating equipment and multiplexers, to be located within or upon the Telephone Company's wire center or Telephone Company's access tandem buildings, and dedicated to such customer's use.

(D)(X)

© 2022 Frontier Communications Parent, Inc. All rights reserved.

ACCESS SERVICE

2. **General Regulations** (Cont'd)

2.6 **Definitions** (Cont'd)

WATS Serving Office

"WATS Serving Office" denotes a Telephone Company switching office capable of performing the optional screening functions used in Combined Access Service Arrangements.

Wire Center

The term "Wire Center" denotes (1) a building in which one or more central offices, including end office switches, used for the provision of Telephone Exchange Services, are located, or (2) in the case of a centralized Telephone Company equal access tandem arrangement, a building in which Telephone Company access facilities are located for purposes of interconnection to customer premises.

© 2022 Frontier Communications Parent, Inc. All rights reserved.

2. **General Regulations** (Cont'd)

2.7 **Service Level Agreements**

2.7.1 Basic Service Level Agreements (Basic SLAs)

Regulations pertaining to Basic SLAs are contained in this Guide as specified following:

Description	Tariff Reference	
Credit Allowance for Service Interruptions	2.7.1.1	
Reserved For Future Use	2.7.1.2	(C)

© 2023 Frontier Communications Parent, Inc. All rights reserved.

ACCESS SERVICE

2. **General Regulations** (Cont'd)

2.7 **Service Level Agreements** (Cont'd)

2.7.1 **Basic Service Level Agreements (Basic SLAs)** (Cont'd)

2.7.1.1 **Credit Allowance for Service Interruption**

(A) General

A service is interrupted when it becomes unusable to the customer because of failure of a facility component used to furnish service under this Guide or in the event that the protective controls applied by the Telephone Company result in the complete loss of service by the customer as set forth in 6.4(A) following. An interruption period starts when an inoperative service is reported by the customer to the Telephone Company and ends when the service is operative. The customer is responsible for sectionalizing trouble to the Telephone Company facilities and/or equipment as set forth in 2.3.10 preceding.

Subject to Section 2.7.4(B) following, in case of an interruption to any service, credit allowance for the period of interruption shall be calculated as set forth in this Section 2.7.1.1.

The credit allowance for an interruption or for a series of interruptions shall not exceed the monthly rate and minimum monthly usage charge for the service interrupted in any one monthly billing period.

For purposes of this section of the tariff, "major fraction" is defined as that time period representing one-half or more of the incremental time period used to apply the credit allowance for those specific services listed in (B) following.

Service interruptions for Specialized Service or Arrangements provided under the provisions of 12 following shall be administered in the same manner as those set forth in this Section 2.7.1.1 unless other regulations are specified with the individual case filing.

(1) An out of service credit will apply for the following Optical Networking rate elements, where applicable, should the service be interrupted due to the Telephone Company's system's failure to switch to protected electronics and/or facilities within one (1) second in those locations connected to the Telephone Company surveillance system unless such interruptions are a result of conditions outside the Telephone Company's control:

- Shared Ring Connect
- Ring Connect
- LAN-wide Premium Transport
- Ring-per-mile Transport
- ON-net Banded Optical Transport provisioned via a ring topology
- Custom Connect configured via a Ring topology.

(2) Credit will be predicated on information provided by the Telephone Company's and the customer's network surveillance systems associated with this service arrangement. The Telephone Company and the customer shall each have the opportunity to perform an annual inspection of the other party's network surveillance system to confirm its accuracy. The out-of-service credit will be calculated based on the monthly rate element charges of that portion of the inter-office network rendered inoperative. A maximum limit of one month recurring charge per rate element will be allotted for a interruption or series of interruptions within any one billing period.

© 2022 Frontier Communications Parent, Inc. All rights reserved.

ACCESS SERVICE

2. **General Regulations** (Cont'd)

2.7 **Service Level Agreements** (Cont'd)

2.7.1 **Basic Service Level Agreements (Basic SLAs)** (Cont'd)

2.7.1.1 **Credit Allowance for Service Interruption** (Cont'd)

(A) General (Cont'd)

(3) Any outage of Single Route Custom Connect services of four (4) hours or more due to a company facility failure will result in a credit of 100% of the monthly rate for the service. Any outage of Diverse Route Custom Connect services of one (1) hour or more due to a company facility failure will result in a credit of 100% of the monthly rate for the service. These credits can not exceed the monthly charge in a single month's billing period.

(4) For Dedicated SONET Optical Transport Service (DSOTS) nodes and network optimization, any single service outage of four hours or more due solely to a Telephone Company facility failure will result in a credit of 100% of the monthly rates for the applicable DSOTS node or network optimization devices affected. Only one such credit is allowed in a single month's billing period.

For DSOTS Optical Transport Channels, the following credits will be applied.

- For protected Optical Transport Channels, any Telephone Company facility failure which is not restored within 1 minute will result in a credit of 100% of the monthly rate for the applicable protected optical channels affected. Only one such credit is allowed in a single month's billing period.

- For unprotected Optical Transport Channels, no credit applies for a service outage on these channels for which no protection is provided by the Telephone Company.

- When one or more channels utilizing a multi-port interface card require(s) maintenance, all channels provisioned over that multi-port interface card will be interrupted. No credit will be made for such periods during which all channels on the multi-port interface card are interrupted to allow the Telephone Company to perform required maintenance.

(5) For Ethernet Private Line Service, any outage due solely to a Telephone Company facility failure will result in a credit of 100 % of the monthly recurring charges for the portion of the service affected. Only one such credit is allowed in a single month's billing period. The following credits will be applied.

- For protected On-Net Channel Extensions and On-Net Channel Mileage, a credit of 100% of one month's recurring charge for the Ethernet Private LIne service will apply for any outage that exceeds one minute. No more than one such credit is given in 1 monthly billing cycle.

- For unprotected On-Net Channel Extensions a credit of 100% of one month's recurring charge for the Ethernet Private Line service will apply if the total outage time exceeds 4 hours.

- For Ethernet Private line services that consist of both unprotected and protected service components, the credit allowance that applies for each outage will be based on the credit allowance provisions for unprotected channels.

© 2022 Frontier Communications Parent, Inc. All rights reserved.

ACCESS SERVICE

2. **General Regulations** (Cont'd)

2.7 **Service Level Agreements** (Cont'd)

2.7.1 **Basic Service Level Agreements (Basic SLAs)** (Cont'd)

2.7.1.1 **Credit Allowance for Service Interruption** (Cont'd)

(A) General (Cont'd)

(6) For Dedicated SONET Ring (DSR) Service, any outage greater than one (1) minute and due solely to a Telephone Company facility failure will result in a credit of 100% of the monthly rate for the applicable rate elements of the affected service. Only one such credit is allowed in a single month's billing period. When DSR as set forth in Section 20.2 following is arranged with subtending rings, a credit allowance for a service interruption is applied independently to each ring. For example, if the main DSR becomes interrupted and is eligible for a credit allowance, no credit allowance is due on the subtending ring(s) associated with that main ring unless service on the subtending ring(s) is also interrupted.

(7) Reserved

The credit allowance for all other Optical Networking access services will be as shown in 2.7.1.1(B).

(8) Special Access Services

(B) For Special Access Services (other than Program Audio and Video Digital Transport Service TV-1 Analog/ Services) and for Multiplexing services, no credit shall be allowed for an interruption of less than 30 minutes. The customer

(1) shall be credited for an interruption of 30 minutes or more at the rate of 1/1440 of the monthly charges for the facility or service for each period of 30 minutes or major fraction thereof that the interruption continues.

The monthly charges used to determine the credit shall be as follows:

For two point services, the monthly charge subject to credit shall be the total of all the monthly rate element charges associated with the service (i.e., two circuit terminations, circuit mileage and optional features and functions).

(a) For multipoint services, the monthly charge subject to credit shall be only the total of all the monthly rate element charges associated with that portion of the service that is inoperative (i.e., a circuit termination per customer premises, circuit mileage and optional features and functions).

(b) For multiplexed services, the monthly charge subject to credit shall be the total of all the monthly rate element charges associated with that portion of the service that is inoperative. When the facility which is multiplexed or the multiplexer itself is inoperative, the monthly charge shall be the total of all the monthly rate element charges associated with the service (i.e., the circuit termination, circuit mileage and optional features and functions, including

(c) the multiplexer on the facility to the hub, and the circuit terminations, circuit mileage and optional features and functions on the individual services from the hub). When the service which rides a circuit of the multiplexed facility is inoperative, the monthly charge shall be the total of all the monthly rate element charges associated with that portion of the service from the Hub to a customer premises (i.e., circuit termination, circuit mileage and optional features and functions).

© 2022 Frontier Communications Parent, Inc. All rights reserved.

ACCESS SERVICE

2. **General Regulations** (Cont'd)

2.7 **Service Level Agreements** (Cont'd)

2.7.1 **Basic Service Level Agreements (Basic SLAs)** (Cont'd)

2.7.1.1 **Credit Allowance for Service Interruption** (Cont'd)

(B) Special Access Services (Cont'd)

(2) For Program Audio and Video Digital Transport ServiceTV-1 Analog Special Access Services, no credit shall be allowed for an interruption of less than 30 seconds. The customer shall be credited for an interruption of 30 seconds or more as follows:

(a) For two-point services, when monthly rates are applicable, the credit shall be at the rate of 1/8640 of the monthly charges for the service for each period of 5 minutes or major fraction thereof that the interruption continues.

(b) For two-point services, when daily rates are applicable, the credit shall be at the rate of 1/288 of the daily charges for the service for each period of 5 minutes or major fraction thereof that the interruption continues.

(c) For multipoint services, when monthly rates are applicable, the credit shall be at the rate of 1/8640 of the monthly charges for each circuit termination, circuit mileage and optional features and functions that is inoperative for each period of 5 minutes or major fraction thereof that the interruption continues.

(d) For multipoint services, when daily rates are applicable, the credit shall be at the daily rate of 1/288 of the daily charges for each circuit termination, circuit mileage and optional features and functions that is inoperative for each period of 5 minutes or major fraction thereof that the interruption continues.

(e) For multipoint services, the credit for the monthly or daily charges includes the charges for the distribution amplifier only when the distribution amplifier is inoperative.

(f) When two or more interruptions occur during a period of 5 consecutive minutes, such multiple interruptions shall be considered as one interruption.

(3) For certain Special Access services (Wideband Digital, WD1-3; Digital Data Access, DA1-4; and High Capacity, HC1), any period during which the error performance is below that specified for the service will be considered as an interruption.

© 2022 Frontier Communications Parent, Inc. All rights reserved.

ACCESS SERVICE

2. **General Regulations** (Cont'd)

2.7 **Service Level Agreements** (Cont'd)

2.7.1 **Basic Service Level Agreements (Basic SLAs)** (Cont'd)

2.7.1.1 **Credit Allowance for Service Interruption** (Cont'd)

(B) Special Access Services (Cont'd)

(4) Except as noted, all Special Access Services will be eligible for a credit allowance for each occurrence of a service interruption period greater than 30 minutes. The maximum credit allowance will be $200.00 for each out of service condition within the Telephone Company's facilities and will not exceed the monthly charge for the interrupted service. The credit allowance will not be applied more than once per calendar month. This credit allowance is applicable in all jurisdictions. The credit allowance is in addition to the credit allowance in 2.7.1.1(B)(1). A credit allowance will not be extended in accordance with conditions in 2.1.3 and 2.7.4(B) for repair of Telephone Company owned facilities.

The exceptions to this credit allowance are Program Audio Service - Daily Rates in 7.6.5, Video Digital Transport Service tTV-1 Analog Services in 7.7, Individual Case Basis Services in 7.12 and Specialized Service Arrangements in 12.

* Section 2.7.1.1(B)(4) is not available for Special Access Services installed after June 1, 2006. The preceding sentence applies to both Special Access Services that are provided on a month-to-month basis and Special Access Services that are provided under a Discount Plan (as defined below).

For Special Access Services installed on or before June 1, 2006, Section 2.7.1.1(B)(4) will not be available as follows:

For Special Access Services provided on a month-to-month basis, after June 1, 2006.

For Special Access Services provided under a Discount Plan (as defined below), after the date of expiration, termination, or cancellation of the Discount Plan commitment period that is in effect on June 1, 2006.

For Special Access Services provided under a Discount Plan (as defined below) that are covered by a National Service Level Agreement Plan, during the period that a customer participates in such National Service Level Agreement Plan. The customer has the option to subscribe to a National Service Level Agreement Plan as set forth in Section 2.7.3 following. Nothing in this paragraph (c) shall in any way limit the effect of paragraph (b) preceding.

As used in this note, "Discount Plan" means any tariff arrangement for the provision of Special Access Services other than on a month-to-month basis.

For any month for which a Special Access Service receives a credit allowance under Section 2.7.1.1(B)(4), that Special Access Service shall not receive a credit allowance under Section 2.7.1.1(B)(5).

© 2022 Frontier Communications Parent, Inc. All rights reserved.

ACCESS SERVICE

2. **General Regulations** (Cont'd)

2.7 **Service Level Agreements** (Cont'd)

2.7.1 **Basic Service Level Agreements (Basic SLAs)** (Cont'd)

2.7.1.1 **Credit Allowance for Service Interruption** (Cont'd)

(B) Special Access Services (Cont'd)

(5) For certain Special Access services, a Special Access Service Guarantee (SASG) credit allowance will apply in the event that such services experience a service interruption of four (4) or more consecutive hours except as specified in 2.7.4(B) following. The SASG credit allowance will apply to Voice Grade, monthly Program Audio and Video Digital Transport Service t TV-1 Analog, Metallic, Telegraph, Wideband Data, Digital Data Service (DDS), and High Capacity DS1 & DS3 Special Access services (collectively, Special Access Services).

The customer has the option to subscribe to a National SLA Plan as set forth in Section 2.7.3 following. When a customer subscribes to a National SLA plan, credit allowances under this Section 2.7.1.1(B)(5) do not apply to services covered by the National SLA Plan.

If a Special Access Service is eligible for an SASG credit allowance, the Telephone Company shall provide the applicable credit amount as set forth in the table following. The Telephone Company shall bill customer the applicable monthly rate for the Special Access Service, and if customer is eligible to receive the SASG credit allowance, customer shall receive the SASG credit in a later invoice. Except as stated in this Guide, the SASG credit allowance is in addition to any other credit allowances available under this Section 2.7.1.1. The maximum amount of all credit allowances available under this Section 2.7.1.1 for a Special Access Service for a given billing period shall not exceed the total applicable monthly charge paid by the customer for such Special Access Service. The monthly charge will consist of all applicable rate elements charged to the circuit experiencing the service interruption. The SASG credit allowance can only be applied once per month on a per circuit basis. For multi-point circuits, the SASG credit allowance will apply to each leg of the circuit that experiences a service interruption.

© 2022 Frontier Communications Parent, Inc. All rights reserved.

ACCESS SERVICE

2. **General Regulations** (Cont'd)

2.7 **Service Level Agreements** (Cont'd)

2.7.1 **Basic Service Level Agreements (Basic SLAs)** (Cont'd)

2.7.1.1 **Credit Allowance for Service Interruption** (Cont'd)

(B) Special Access Services (Cont'd)

(5) (Cont'd)

The SASG credit allowance for each applicable service is listed below and applies to all states:

Service	SASG (per circuit)
Metallic	$10.00
Telegraph, Voice Grade	20.00
Program Audio (monthly, full –time only)	
200 – 3500 Hz	10.00
100 – 5000 Hz	15.00
50 – 8000 Hz	20.00
50 – 15000 Hz	25.00
Video Digital Transport Service t TV-1 Analog (monthly)	100.00
Wideband Data	100.00
Digital Data Service (DDS)	
2.4 kbps	40.00
4.8 kbps	45.00
9.6 kbps	50.00
19.2 kbps	55.00
56.0 kbps	60.00
64.0 kbps	65.00
High Capacity	
DS1	160.00
DS3	400.00

© 2022 Frontier Communications Parent, Inc. All rights reserved.

ACCESS SERVICE

2. **General Regulations** (Cont'd)

2.7 **Service Level Agreements** (Cont'd)

2.7.1 **Basic Service Level Agreements (Basic SLAs)** (Cont'd)

2.7.1.1 **Credit Allowance for Service Interruption** (Cont'd)

(C) Reserved

© 2022 Frontier Communications Parent, Inc. All rights reserved.

ACCESS SERVICE

2. **General Regulations** (Cont'd)

2.7 **Service Level Agreements** (Cont'd)

2.7.1 **Basic Service Level Agreements (Basic SLAs)** (Cont'd)

2.7.1.1 **Credit Allowance for Service Interruption** (Cont'd)

(C) Reserved (Cont'd)

(D) When a Credit Allowance Does Not Apply

Services will not be eligible for credits when any of the conditions set forth in Section 2.7.4(B) following exist.

(E) Use of an Alternative Service Provided by the Telephone Company

Should the customer elect to use an alternative service provided by the Telephone Company during the period that a service is interrupted, the customer must pay the tariffed rates and charges for the alternative service used.

(F) Temporary Surrender of a Service

In certain instances, the customer may be requested by the Telephone Company to surrender a service for purposes other than maintenance, testing or activity relating to a service order. If the customer consents, a credit allowance will be granted. The credit allowance will be 1/440 of the monthly rate for each period of 30 minutes or fraction thereof that the service is surrendered. In no case will the credit allowance exceed the monthly rate for the service surrendered in any one monthly billing period.

.

© 2022 Frontier Communications Parent, Inc. All rights reserved.

ACCESS SERVICE

2. **General Regulations** (Cont'd)

2.7 **Payment Arrangements and Credit Allowances** (Cont'd)

2.7.1 **Basic Service Level Agreements (Basic SLAs)** (Cont'd)

2.7.1.2 **Reserved For Future Use** (C)

© 2023 Frontier Communications Parent, Inc. All rights reserved.

ACCESS SERVICE

2. **General Regulations** (Cont'd)

2.7 **Service Level Agreements** (Cont'd)

2.7.2 **Enhanced Service Level Agreements (Enhanced SLAs)**

Regulations pertaining to Enhanced SLAs are contained in this Guide as specified following:

Description	Tariff Reference
Integrated Optical Service Rider SLAs	2.7.2.1

(X)

© 2022 Frontier Communications Parent, Inc. All rights reserved.

ACCESS SERVICE

2. **General Regulations** (Cont'd)

2.7 **Service Level Agreements** (Cont'd)

2.7.2 **Enhanced Service Level Agreements (Enhanced SLAs)** (Cont'd)

2.7.2.1 **Integrated Optical Service Rider SLAs**

(A) General

(1) With the exception of those Integrated Optical Service Riders provided subject to Section 23.1.3 following, the SLAs set forth in this Section 2.7.2.1 apply to all other Integrated Optical Service Riders set forth in Section 23.1 following ("Qualifying Services").

(2) The monthly recurring rate(s) for the Qualifying Service are the Integrated Optical Service Rider Appearances.

(3) To receive credit, the Telephone Company must receive from the customer a written request for credit within sixty (60) calendar days of the end of the calendar month in which the SLA threshold was missed. The customer's request for credit must be submitted to the appropriate Telephone Company in a manner mutually agreed upon by the Telephone Company and the customer. The request must include a list of the identification numbers of all impacted circuits.

(B) Availability

(1) Availability refers to the percentage of time over a calendar month that a Qualifying Service is able to transmit data over the Telephone Company's integrated optical service. A Qualifying Service is unavailable if data cannot be transmitted because of a failure of a facility component within the Telephone Company's integrated optical service that is used to furnish the Qualifying Service provided under this Guide.

(2) Availability is calculated as follows: Availability = (1440 X Number of Days in Month) – (Number of Minutes the Service is unavailable during Month)/(1440 X Number of Days in Month). The number of minutes the Service is unavailable is as determined by the Telephone Company.

(3) The Telephone Company threshold for Availability under this Section in a calendar month is 99.999%.

(4) If Availability under this Section is less than the threshold, then a credit equal to twenty-five percent (25%) of the monthly recurring rate(s) for the affected Qualifying Service applies. Only one (1) such credit is allowed in a single month's billing period.

(C) Mean Time to Restore (MTTR)

(1) MTTR applies to an interruption of service that is within the Telephone Company's integrated optical service.

(2) Interruption of service is defined as a condition which renders a Qualifying Service unusable to the customer (i.e., data cannot be transmitted) because of a failure of a facility within the Telephone Company's integrated optical service that is used to furnish the Qualifying Service under this Guide. The Telephone Company will initiate a trouble ticket on all DS1 Qualifying Service interruptions reported by the customer. The Telephone Company will initiate a trouble ticket on all DS3 Qualifying Service interruptions reported by the customer and/ or detected by the Telephone Company's network.

© 2022 Frontier Communications Parent, Inc. All rights reserved.

ACCESS SERVICE

2. **General Regulations** (Cont'd)

2.7 **Service Level Agreements** (Cont'd)

2.7.2 **Enhanced Service Level Agreements (Enhanced SLAs)** (Cont'd)

2.7.2.1 **Integrated Optical Service Rider SLAs** (Cont'd)

(C) Mean Time to Restore (MTTR) (Cont'd)

(3) MTTR for a calendar month shall be the average of all Time to Restore (TTR), as calculated by the Telephone Company. The TTR is the period of time the Qualifying Service is unavailable between the opening and closing of the trouble ticket, minus any stop clock time that was logged against the trouble ticket. Stop clock time includes, by way of example, the following times:

- Periods when customer testing is occurring.
- Periods when the customer is working on its own Customer Premises Equipment (CPE) and has not yet released the Qualifying Service to the Telephone Company for maintenance, testing or repair.
- Periods when the Telephone Company is awaiting customer authorization to commence work on the Qualifying Service.
- Periods when the Telephone Company is denied access to premises or facilities necessary to diagnose, repair, or test a Qualifying Service.
- Periods following repair of the Qualifying Service when the ticket is held open by the customer to ensure the trouble is resolved.

(4) MTTR is calculated by summing TTR for all measured tickets for the customer for the calendar month and dividing by the total number of tickets for that customer during that month.

(5) MTTR excludes any subsequent reports (i.e., additional customer inquiries while the trouble is pending), CPE troubles, trouble found on the customer's side of the point of demarcation, no trouble found, troubles closed due to customer action, force majeure events, and troubles repaired by the Telephone Company prior to receipt of a trouble report on that Qualifying Service.

(6) The threshold for MTTR in a calendar month is 2.5 hours for Qualifying Services.

© 2022 Frontier Communications Parent, Inc. All rights reserved.

ACCESS SERVICE

2. **General Regulations** (Cont'd)

2.7 **Service Level Agreements** (Cont'd)

2.7.2 **Enhanced Service Level Agreements (Enhanced SLAs)** (Cont'd)

2.7.2.1 **Integrated Optical Service Rider SLAs** (Cont'd)

(C) Mean Time to Restore (MTTR) (Cont'd)

(7) If the MTTR is greater than 2.5 hours over the calendar month for all of customer's Qualifying Services, then a credit equal to twenty-five percent (25%) of the monthly recurring rate(s) for the affected Qualifying Service applies for those Qualifying Services that were the subject of a trouble ticket during the measured calendar month whose TTR exceeded 2.5 hours. Only one (1) such credit is allowed in a single month's billing period. If the MTTR is 2.5 hours or less on all of customer's Qualifying Services, then no credit applies to any Qualifying Service, even if the TTR on a particular Qualifying Service exceeded such threshold.

(D) Qualifying Services will not be included in threshold measurements under this Section 2.7.2.1 and will not be eligible for credits under this Section 2.7.2.1 when any of the conditions set forth in Section 2.7.4(B) following exist.

© 2022 Frontier Communications Parent, Inc. All rights reserved.

ACCESS SERVICE

2. **General Regulations** (Cont'd)

2.7 **Service Level Agreements** (Cont'd)

2.7.2 **Enhanced Service Level Agreements (Enhanced SLAs)** (Cont'd)

2.7.2.2 **(Reserved for Future Use)**

© 2022 Frontier Communications Parent, Inc. All rights reserved.

ACCESS SERVICE

2. **General Regulations** (Cont'd)

2.7 **Service Level Agreements** (Cont'd)

2.7.2 **Enhanced Service Level Agreements (Enhanced SLAs)** (Cont'd)

2.7.2.3 **Reserved**

2.7.2.4 **Reserved**

© 2022 Frontier Communications Parent, Inc. All rights reserved.

ACCESS SERVICE

2. General Regulations (Cont'd)

2.7 Service Level Agreements (Cont'd)

2.7.3 RESERVED

2.7.4 When a Credit Allowance Does Not Apply

A. Reserved For Future Use (C)

© 2023 Frontier Communications Parent, Inc. All rights reserved.

ACCESS SERVICE

2. **General Regulations** (Cont'd)

2.7 **Service Level Agreements** (Cont'd)

2.7.4 **When a Credit Allowance Does Not Apply** (Cont'd)

A. Reserved For Future Use (C)

© 2023 Frontier Communications Parent, Inc. All rights reserved.

ACCESS SERVICE

2. **General Regulations** (Cont'd)

2.7 **Service Level Agreements** (Cont'd)

2.7.4 **When a Credit Allowance Does Not Apply** (Cont'd)

B. Credit Allowance for Interruptions/Mean Time to Restore/Availability

This Section 2.7.4(B) applies to and supplements Section 2.7.1.1 preceding, Credit Allowance for Service Interruptions; Section 2.7.2 preceding, Enhanced Service Level Agreements; and Section 2.7.3 preceding, National Service Level Agreements. Services will not be included in performance measurements and credits will not apply:

(1) When the customer fails to report the interruption to the Telephone Company (excluding DS3 Integrated Optical Service Riders); or

(2) When the interruption was caused by the act or omission of the customer or a party authorized by the customer to use the service; or

(3) When the interruption was due to the failure of power, equipment, service, or systems provided by the customer or persons other than the Telephone Company; or

(4) For any period in which the Telephone Company is not afforded access to the premises where the service is terminated; or

(5) When the customer has released the service to the Telephone Company for maintenance purposes, to make rearrangements, or for the implementation of an order for a change in the service, during the time that was negotiated with the customer prior to the release of that service (thereafter, a credit allowance as set forth in this Section 2.7 applies); or

(6) For any period of scheduled maintenance or scheduled downtime where the customer has received prior notification from the Telephone Company; or

(7) When interruptions occur or continue because of the failure of the customer to authorize the replacement of any element of special construction; or

© 2022 Frontier Communications Parent, Inc. All rights reserved.

ACCESS SERVICE

2. **General Regulations** (Cont'd)

2.7 **Service Level Agreements** (Cont'd)

2.7.4 **When a Credit Allowance Does Not Apply** (Cont'd)

(B) Credit Allowance for Interruptions/Mean Time to Restore/Availability (Cont'd)

(8) For periods when the customer elects not to release the service for testing and/or repair; or

(9) For periods of temporary discontinuance as set forth in Section 2.1.8 preceding; or

(10) During periods of interruption as set forth in Section 8.3 following; or

(11) When an interruption is required, permitted or excused by this Guide, or

(12) For interruptions, failures or delays due to acts of God or the public enemy, compliance with any law or any regulation or order of any governmental authority, acts of terrorism, war, rebellion, insurrection or sabotage or damage resulting there from, fires, floods, earthquakes, volcanic action, unusually severe weather, explosions, washouts, rules and regulations with regard to common carriers, accidents, epidemics, riots, strikes or other concerted acts of employees, whether direct or indirect, lockouts or other industrial disturbances, whether direct or indirect, worms, viruses or other contaminants that may cause damage to or disable software, computer or electronic systems, or any similar cause, or other causes beyond the Telephone Company's reasonable control (except that, this Section 2.7.4(B)(12) does not apply to Section 2.7.1.1, excluding the SASG as set forth in Section 2.7.1.1(B)(5), to which this Section 2.7.4(B)(12) shall apply); or

(13) For an interruption, or a group of interruptions resulting from a common cause, for amounts less than one dollar; or

(14) For any interruption of LAN Extension Service as described in 7.14 following; or

(15) For any interruption of an EIS or EIS elements as described in Section 17 following.

© 2022 Frontier Communications Parent, Inc. All rights reserved.

ACCESS SERVICE

2. **General Regulations** (Cont'd)

2.8 Sale or Transfer of an Operating Telephone Company's Assets and/or Stock to an Unaffiliated Third Party

This Section 2.8 shall apply: (i) if the Telephone Company sells or transfers all or a portion of the assets or stock of a Frontier Operating Telephone Company (e.g., Frontier North Inc..) to an unaffiliated third party ("Transfer"); and (ii) a service offering or Service Level Agreement (SLA) of this Guide as referenced in this Section 2.8 does not include terms and conditions relating to a Transfer.

2.8.1 General

The terms and conditions set forth in Section 2.8.2 following shall apply:

(A) when a customer subscribes to a service offering under this Guide that aggregates the customer's purchases from the Telephone Company to measure compliance with such service offering or the customer participates in a SLA that aggregates the customer's measured transactions, and:

(B) the service offering or SLA does not include terms and conditions pertaining to a Transfer; and

(C) as a result of the Transfer, one or more of the following conditions occur solely as a result of the Telephone Company no longer providing the same quantity of services:

(1) the customer no longer satisfies the minimum requirements of the service offering or SLA;

(2) the customer is subject to a related penalty, termination liability or cancellation;

(3) the customer is subject to a change in the tier of a volume table or a rate table; and

(4) the customer is subject to a change in the rate level of the service offering.

2.8.2 Undertaking of the Telephone Company Following a Transfer

When the conditions set forth in 2.8.1 preceding exist, the Telephone Company will utilize the following terms and conditions, as applicable.

(A) If the service offering includes specific minimum ordering requirements for participation, or requires that the customer achieve a minimum number of services, minimum number of rate elements, and/or minimum revenue within a specific geographic area in order to continue its subscription to the service offering or participation in a pricing plan for such service offering (each, a Minimum Requirement), the Telephone Company will apply the terms and conditions of this Section 2.8.2(A). The following service offerings have Minimum Requirements that are subject to this Section 2.8.2(A).

- Call Management Signaling Service as set forth in Section 8.17.4(B) following
- Banded Optical Transport as set forth in Sections 10.6.1(G) and 20(D)(2)(f) following
- TCP/IP Data Aggregation Service as set forth in Section 18.3 following

.

© 2022 Frontier Communications Parent, Inc. All rights reserved.

ACCESS SERVICE

2. **General Regulations** (Cont'd)

2.8 **Sale or Transfer of an Operating Telephone Company's Assets and/or Stock to an Unaffiliated Third Party (Cont'd)**

2.8.2 **Undertaking of the Telephone Company Following a Transfer (Cont'd)**

(A) (Cont'd)

In the event of a Transfer, the following applies.

(1) The Telephone Company will, consistent with the service offering, determine if the customer satisfies the Minimum Requirement for the service offering with the reduced quantity of services the Telephone Company provides to the customer following the Transfer; and

(2) if the customer does not satisfy the Minimum Requirement following the Transfer, determine if the customer would have satisfied the Minimum Requirement had the Transfer not occurred. If the customer would have satisfied the Minimum Requirement had the Transfer not occurred, then no further action shall be taken and the customer will be considered to have satisfied the Minimum Requirement. If the customer would not have satisfied the Minimum Requirement had the Transfer not occurred, then the terms and conditions for such result shall apply under the applicable service offering, except that the calculation of any penalty associated with not satisfying the Minimum Requirement shall be reduced pro-rata to reflect the Transfer. Upon renewal of the customer's commitment period for such service offering or subsequent subscription to such service offering, as applicable, the terms and conditions set forth in the applicable section(s) of this Guide shall apply, including satisfying the Minimum Requirement for such service offering using only the quantity of services the customer purchases from the Telephone Company at the time of renewal or subsequent subscription.

For example, assume Frontier North Inc transfers a portion of its assets to an unaffiliated third party. Further assume that a customer subscribes to Call Management Signaling Service under Section 8.17.4(B) following which has a minimum monthly billing of one million (1,000,000) call signals per month. Also assume that following the Transfer, the volume of call signals recorded for the customer at the next scheduled review is nine hundred fifty thousand (950,000), and that an estimated one hundred thousand (100,000) call signals were associated with the services transferred to the unaffiliated third party. In this case, the Telephone Company would determine if the customer would have satisfied the minimum number of call signals had the Transfer not occurred by adding (i) the estimated number of call signals associated with the services transferred to the unaffiliated third party and; (ii) the recorded number of call signals for the period of review [950,000 + 100,000 = 1,050,000 call signals]. Based on this calculation, the customer would have satisfied the Minimum Requirement and will not incur any shortfall charges. However, if the result of such calculation was that the customer still did not satisfy the Minimum Requirement for the service, then the terms and conditions for such result shall apply under Section 8.17.4(B) following, except that the calculation of shortfall charges shall be reduced pro-rata to reflect the Transfer

.

© 2022 Frontier Communications Parent, Inc. All rights reserved.

ACCESS SERVICE

2. **General Regulations** (Cont'd)

2.8 **Sale or Transfer of an Operating Telephone Company's Assets and/or Stock to an Unaffiliated Third Party** (Cont'd)

2.8.2 **Undertaking of the Telephone Company Following a Transfer** (Cont'd)

(B) If the service offering requires that the customer commit a minimum number of the services or rate elements that the customer purchases from the Telephone Company and maintain such minimum during the term of the service offering (a Commitment Level), and the service offering does not apply rates or credits based on a volume based tier structure, the Telephone Company will apply this Section 2.8.2(B). The following service offering has a Commitment Level that is subject to this Section 2.8.2(B).

- DS1 Term Payment Plan as set forth in Section 7.2.1(G) following

In the event of a Transfer, the following applies.

(1) The Telephone Company will recalculate the Commitment Level for the duration of the current term to reflect the removal of the services the Telephone Company no longer provides to the customer solely as a result of the Transfer; and

(2) use the reduced Commitment Level in all subsequent reviews/true-ups that measure the customer's compliance with established requirements for the service offering for the balance of the current term unless otherwise revised by: (i) the customer in accordance with the terms and conditions of the service offering; or (ii) the terms and conditions of such service offering. Upon renewal of the customer's term for such service offering, the terms and conditions set forth in the applicable section(s) of this Guide shall apply, including establishment of a new Commitment Level using only the quantity of services the customer purchases from the Telephone Company at the time of renewal.

(C) For example, assume Frontier North, Inc. transfers a portion of its assets to an unaffiliated third party. Further assume a customer with a DS1 Term Payment Plan and a Commitment Level of seventy-five (75) DS1 SALs is ten (10) DS1 SALs short of its Commitment Level at the next scheduled annual review (i.e., the customer has sixty-five (65) in-service DS1 SALs at the annual review). Also assume that ten (10) DS1 SALs were transferred to an unaffiliated third party as a result of the Transfer. In this case, the Telephone Company will reduce the customer's Commitment Level to sixty-five (65) DS1 SALs to reflect the Transfer. Since the customer has satisfied its reduced Commitment Level, no further action applies and the customer will not incur any penalty for such result during the annual review.

For Service Level Agreements (SLAs), a customer who participates in one of such SLAs prior to a Transfer shall continue with such SLA for the balance of the subscription term, regardless of whether or not the customer is able to satisfy the minimum requirement(s) of the SLA using the reduced quantity of services the Telephone Company provides to the customer following a Transfer.

For example, assume Frontier North Inc transfers a portion of its assets to an unaffiliated third party. Further assume that a customer subscribes to the 2010 Enhanced SLA Plan for Qualifying Services under Section 2.7.2.4 preceding. The 2010 Enhanced SLA Plan for Qualifying Services requires that the customer have at least thirty-five (35) measured transactions per month as a condition for participation in such SLA. Finally, assume that immediately following the Transfer, the customer has only twenty-two (22) measured transactions. In this case, the customer will be allowed to continue its subscription to the 2010 Enhanced Service Level Agreement for the remainder of the subscription term ending December 31, 2010.

© 2022 Frontier Communications Parent, Inc. All rights reserved.

ACCESS SERVICE

2. **General Regulations** (Cont'd)

2.9 **Initial Transfer of Assets from Predecessor Company**

The issuing carriers of this Guide were created by a transfer of assets from an unaffiliated third party. This Section 2.9 governs treatment of customers who, at the time of the transfer of assets from the predecessor company, subscribed to a service offering under this Guide that aggregates the customer's purchases from the Telephone Company to measure compliance with such service offering or participated in a SLC that aggregates the customer's measured transactions.

(A) When a customer subscribes to a service offering under this Guide that aggregates the customer's purchases from the Telephone Company to measure compliance with such service offering or the customer participates in a SLA that aggregates the customer's measured transactions, and the service offering or SLA includes terms and conditions pertaining to a transfer, the terms and conditions pertaining to a transfer will apply to that service offering or SLA as if the Telephone Company were the predecessor company.

(B) When customer subscribes to a service offering under this Guide that aggregates the customer's purchases from the Telephone Company to measure compliance with such service offering or the customer participates in a SLA that aggregates the customer's measured transactions, and the service offering or SLA does not include terms and conditions pertaining to a Transfer, Sections 2.8 preceding will apply as if the Telephone Company were the predecessor company.

For example, if a customer subscribed to a service offering with the predecessor company that aggregates the customer's measured transactions, and the transfer of assets resulted in the customer meeting the conditions described in 2.8.1(B) and (C) preceding with respect to the assets transferred to the Telephone Company, the provisions of 289.2 preceding will apply with respect to prorating any Minimum Requirements.

© 2022 Frontier Communications Parent, Inc. All rights reserved.

ACCESS SERVICE

3. RESERVED

© 2022 Frontier Communications Parent, Inc. All rights reserved.

ACCESS SERVICE

4. RESERVED

© 2022 Frontier Communications Parent, Inc. All rights reserved.

ACCESS SERVICE

5. Ordering Special Access Service

This section sets forth the regulations and order related charges for Access Orders for Special Access Services. These charges are in addition to other applicable charges as set forth in other sections of this Guide.

5.1 Access Service Request Requirements

An ASR is used by the Telephone Company to receive orders for the following types of services requested by the customer:

- Special Access as in Section 1, and
- Other Services as in other sections of the tariff.

When placing an order for Access Services, the customer must complete a Telephone Company Access Service Request and shall provide the information as required in 5.1.1, 5.1.2, and 5.1.3 following.

General

5.1.1 A customer may order any number of services of the same type and between the same premises on a single Access Service Request. All details for services for a particular order must be identical except for those for multipoint service.

A customer may order access service on behalf of the customer's end user. The customer must provide the Telephone Company all the necessary information as set forth in this section.

The customer shall provide all information necessary for the Telephone Company to provide and bill for the requested service. In addition to the order information required in 5.1.2 and 5.1.3 following, the customer must also provide:

- Customer name and premises address(es)

- Billing name and address (when different from customer name and address).

- Customer contact name(s) and telephone number(s) for the following provisioning activities: order negotiation, order confirmation, interactive design, installation and billing.

© 2022 Frontier Communications Parent, Inc. All rights reserved.

ACCESS SERVICE

5. **Ordering Special Access Service** (Cont'd)

5.1 **Access Service Request Requirements** (Cont'd)

5.1.2 **RESERVED**

© 2022 Frontier Communications Parent, Inc. All rights reserved.

ACCESS SERVICE

5. **Ordering Special Access Service** (Cont'd)

5.1 **Access Service Request Requirements** (Cont'd)

5.1.2 **RESERVED** (Cont'd)

© 2022 Frontier Communications Parent, Inc. All rights reserved.

ACCESS SERVICE

5. **Ordering Special Access Service** (Cont'd)

5.1 **Access Service Request Requirements** (Cont'd)

5.1.2 **RESERVED** (Cont'd)

© 2022 Frontier Communications Parent, Inc. All rights reserved.

ACCESS SERVICE

5. **Ordering Special Access Service** (Cont'd)

5.1 **Access Service Request Requirements** (Cont'd)

5.1.2 **RESERVED** (Cont'd)

© 2022 Frontier Communications Parent, Inc. All rights reserved.

ACCESS SERVICE

5. **Ordering Special Access Service** (Cont'd)

5.1 **Access Service Request Requirements** (Cont'd)

5.1.2 **RESERVED** (Cont'd)

© 2022 Frontier Communications Parent, Inc. All rights reserved.

ACCESS SERVICE

5. **Ordering Special Access Service** (Cont'd)

5.1 **Access Service Request Requirements** (Cont'd)

5.1.2 **RESERVED** (Cont'd)

© 2022 Frontier Communications Parent, Inc. All rights reserved.

ACCESS SERVICE

5. **Ordering Special Access Service** (Cont'd)

5.1 **Access Service Request Requirements** (Cont'd)

5.1.2 **RESERVED** (Cont'd)

© 2022 Frontier Communications Parent, Inc. All rights reserved.

ACCESS SERVICE

5. **Ordering Special Access Service** (Cont'd)

5.1 **Access Service Request Requirements** (Cont'd)

5.1.2 **RESERVED** (Cont'd)

© 2022 Frontier Communications Parent, Inc. All rights reserved.

ACCESS SERVICE

5. **Ordering Special Access Service** (Cont'd)

5.1 **Access Service Request Requirements** (Cont'd)

5.1.3 **Special Access Services**

(A) General

When placing an order for Special Access Services, the customer must provide the requirements as follows:

For all Special Access Services, the customer must specify the customer designated premises or Hubs involved, the type of service, (e.g., Voice Grade, High Capacity, etc.) the channel interface, technical specification package and options desired. The customer must also indicate the jurisdiction of the circuit as set forth in 7.1.9 following. For DS3 High Capacity Services, the customer must indicate the level of capacity. (C)
For multipoint services, the channel interface at each premises may, at the request of the customer, be different but all such interfaces shall be compatible.

Where the Special Access Service is exempt from the Special Access Surcharge, the customer shall furnish with the Access Service Request the certification as set forth in 7.2.1(E) following. Exemption certifications may be provided in writing or by use of an Access Service Request.

© 2022 Frontier Communications Parent, Inc. All rights reserved.

ACCESS SERVICE

5. **Ordering Special Access Service** (Cont'd)

5.1 **Access Service Request Requirements** (Cont'd)

5.1.4 **RESERVED**

© 2022 Frontier Communications Parent, Inc. All rights reserved.

ACCESS SERVICE

5. **Ordering Special Access Service** (Cont'd)

5.1 **Access Service Request Requirements** (Cont'd)

5.1.5 Reserved

(A)

© 2022 Frontier Communications Parent, Inc. All rights reserved.

ACCESS SERVICE

5. **Ordering Special Access Service** (Cont'd)

5.1 **Access Service Request Requirements** (Cont'd)

5.1.6 **Provision of Other Services**

(A) Testing Service, Additional Labor, Restoration Priority and Special Facilities Routing shall be ordered with an Access Service Request or as set forth in (B) following. The rates and charges for these services, as set forth in other sections of this Guide, will apply in addition to the ordering charges set forth in this section and the rates and charges for the Access Service with which they are associated.

(B) Where possible, the Telephone Company will allow the services listed preceding to be subsequently added to an Access Service Request at any time, up to and including the service date for the Access Service. When added subsequently, charges for a design change as set forth in 5.3.1(C) following will apply when an engineering review is required.

(C) Additional Engineering is not an ordering option, but will be applied to an Access Service Request when the Telephone Company determines that Additional Engineering is necessary to accommodate a customer request. Additional Engineering conditions and charges are as set forth in 8.1 following and are in addition to the regulations, rates and charges specified in this section.

(D) For Packet Switching Network Service*, the packet carrier must provide a Percent of Interstate Usage (PIU) in the Main Remarks section of the ASR when service is initially ordered. This PIU will be used as the basis for prorating the packet usage charges to the interstate and intrastate jurisdictions. The packet switching carrier may submit an updated PIU report in writing at any time following one full month's billing. The updated report will become effective on the first day of the next monthly billing period which begins at least 15 business days after the date the revised report is received by the Telephone Company.

Access Order Service Date Intervals

5.1.7 Access Service is provided with Service Date Intervals. The Service Date Interval is that period of time which the Telephone Company requires to properly provision the service and begins when the customer submits a completed Access Service Request for service, as set forth in 5.1 preceding.

* Effective November 19, 2005, this service is no longer available to any customer who is not a customer as of November 19, 2005. Effective November 19, 2005, existing customers may not make additions, moves or changes to this service or submit any new orders for this service.

© 2022 Frontier Communications Parent, Inc. All rights reserved.

ACCESS SERVICE

5. **Ordering Special Access Service** (Cont'd)

5.1 **Access Service Request Requirements** (Cont'd)

5.1.7 **Access Order Service Date Intervals** (Cont'd)

The Telephone Company shall publish and make available to all customers, upon reasonable request, a schedule of Service Date Intervals applicable for Switched and Special Access Services. The schedule shall specify the services and the quantities of services that can be provided in the Service Date Intervals. Service Date Interval schedules are provided during regular business days at Telephone Company offices at which the customer places an order for Access Service.

Access Services provided in a Service Date Interval will be installed during Telephone Company business days. If a customer requests that installation be done outside of scheduled work hours, and the Telephone Company agrees to this request, the customer will be subject to applicable Additional Labor Charges as set forth in 8.2. following.

5.1.8 **Selection of Facilities For Access Order**

When there are analog or digital high capacity facilities to a Hub on order or in service for the customer's use, the customer may request a specific channel or transmission path be used to provide the Switched or Special Access Service requested in an Access Service Request. The Telephone Company will make a reasonable effort to accommodate the customer request.

For all other Access Service Requests, the option to request a specific transmission path or channel is not provided except as provided for under Special Facilities Routing as set forth in 11. following.

5.1.9 **Shared Use Facilities**

Shared Use (i.e., Switched and Special Access Services provided over the same analog or digital high capacity facilities) is allowed. Shared use facilities to a Hub will be ordered and provided as either Switched or Special Access Service. While shared use is allowed, individual services utilizing these facilities must be ordered either as Switched Access Service or Special Access Service. When placing the order for the individual service(s), the customer must specify a channel assignment for each service ordered.

© 2022 Frontier Communications Parent, Inc. All rights reserved.

ACCESS SERVICE

5. **Ordering Special Access Service** (Cont'd)

5.1 **Access Service Request Requirements** (Cont'd)

5.1.10 **RESERVED**

5.1.11 **Dedicated SONET Ring (DSR)**

For Dedicated SONET Ring (DSR), the Telephone Company will construct the customer's dedicated ring. The customer must provide the Telephone Company with complete and accurate information to design and construct the customer's dedicated ring. Construction will not being until the customer and the Telephone Company agree on the design of the ring. The order date for the ring is the date on which the customer provides the Telephone Company with a complete and accurate ASR for the service. In the event that the customer cancels its request, or part of its request, for construction of the ring, cancellation charges as set forth in 5.3.2 following will apply.

5.1.12 **Special Construction**

(A) When the Telephone Company determines that the installation of service meets the guidelines of the Special Construction tariffs as set forth in Section 1.3 preceding, the customer is notified and conditions are negotiated as prescribed by the Special Construction tariffs.

(B) The regulations, rates and charges for Special Construction (as set forth in the tariffs referenced in Section 1.3 preceding) are in addition to the regulations, rates and charges specified in this section.

© 2022 Frontier Communications Parent, Inc. All rights reserved.

ACCESS SERVICE

5. **Ordering Special Access Service** (Cont'd)

5.2 **Access Services Provided by More than One Telephone Company**

The Telephone Company will provide Access Services under this Guide where more than one Telephone Company is involved in the provision of Access Service as set forth in (A), (B) or (C). The Multiple Company Billing arrangement, as set forth in (B) will be used for all FGB, FGC, FGD, BSA-B, BSA-C, BSA-D, 500, 800, 888 Access and 900 Access Services and Special Access Services.

(A) Reserved

© 2022 Frontier Communications Parent, Inc. All rights reserved.

ACCESS SERVICE

5. **Ordering Special Access Service** (Cont'd)

5.2 **Access Services Provided by More than One Telephone Company** (Cont'd)

(B) Multiple Company Billing

Access services subject to Multiple Company Billing will be provided by the Telephone Companies involved in accordance with the Exchange Carrier Standards Association's Multiple Exchange Carrier Access Billing Guidelines (MECAB) and Multiple Exchange Carrier Ordering and Design Guidelines (MECOD).

For all Special Access Services, the customer shall submit an ASR to each Telephone Company involved in providing the service.

Each Telephone Company will provide the appropriate access service elements within its operating territory to a physical point of interconnection with the other involved Telephone Company(ies). The physical point of interconnection is the location where one Telephone Company's facilities connect with another Telephone Company's facilities.

Each Telephone Company that receives an order will bill the customer for the appropriate access service elements provided by each respective Telephone Company as set forth in 2.4.7 (B) preceding.

(C) Reserved

© 2022 Frontier Communications Parent, Inc. All rights reserved.

ACCESS SERVICE

5. **Ordering Special Access Service** (Cont'd)

5.3 **Access Order Charges**

5.3.1 **Access Service Request Modifications**

The customer may request a modification of its Access Service Request prior to the service date. The Telephone Company will make every effort to accommodate a requested modification when it is able to do so with the normal work force assigned to complete such an order within normal business hours. If the modification cannot be made with the normal work force during normal business hours, the Telephone Company will notify the customer. If the customer still desires the Access Service Request modification, the Telephone Company will schedule a new service date. All charges for Access Service Request modifications will apply on a per occurrence basis.

Any increase in the number of Special Access Service circuits, trunks or busy hour minutes of capacity, or STP Port Terminations and CCS7 Access Service facilities will be treated as a new Access Service Request (for the increased amount only).

If order modifications are necessary to satisfy the transmission performance for a Special Access Service ordered by a customer, these changes will be made without order modification charges being incurred by the customer.

(A) Service Date Change Charge

(1) Access Order service dates for the installation of new services or rearrangements of existing services may be changed, but the new service date may not exceed the service date by more than 30 calendar days except as specified following. When, for any reason, the customer indicates that service cannot be accepted for a period not to exceed 30 calendar days, and the Telephone Company accordingly delays the start of service, a Service Date Change Charge will apply.

If a customer or customer's end user is unable to accept service within 30 calendar days, of the service date, the customer may elect one of the following:

(a) the customer may take no action, and the order will be canceled by the Telephone Company on the 31st day with the appropriate Cancellation Charge as set forth in 5.3.2(C) following applied; or

(b) the customer may choose to commence billing for the service on the 31st day.

© 2022 Frontier Communications Parent, Inc. All rights reserved.

ACCESS SERVICE

5. **Ordering Special Access Service** (Cont'd)

5.3 **Access Order Charges (Cont'd)**

5.3.1 **Access Service Request Modifications (Cont'd)**

(A) Service Date Change Charge (Cont'd)

(1) (Cont'd)

When a customer chooses the option to commence billing for the service on the 31st day, the customer must place an Access Order Modification to the existing Access Order prior to the 31st calendar day after the service date to request a new service date. A Service Date Change Charge will not apply for such service date change; however, if subsequent additional service date changes are requested after calendar day 31, the Service Date Change Charge will apply, per request. (D)

When a customer chooses the option to commence billing for the service on the 31st day, monthly recurring charges for the service will begin accruing at calendar day 31 after the service date. The initial or subsequent bill for the service will include these accrued charges and any applicable nonrecurring charges in addition to billable charges specified in Section 2.4.1(B) preceding.

(D)
(D)
(D)

If the customer cancels the order after the 30th day, the customer will be billed the accrued monthly recurring charges specified preceding plus any applicable nonrecurring charges. These charges will be computed commencing at day 31 after the service date up to and including the cancellation date. The customer will be responsible for applicable minimum period and termination liability charges. (T)

© 2022 Frontier Communications Parent, Inc. All rights reserved.

ACCESS SERVICE

5. **Ordering Special Access Service** (Cont'd)

5.3 **Access Order Charges** (Cont'd)

5.3.1 **Access Service Request Modifications** (Cont'd)

(A) Service Date Change Charge (Cont'd)

(2) If the Telephone company determines it can accommodate the customer's request without delaying service dates for orders of other customers, a new service date may be established that is prior to the standard or negotiated interval service date.

If the service date is changed to an earlier date, the customer will be notified by the Telephone Company that Expedited Order Charges as set forth in (D) following apply. Such charges will apply in addition to the Service Date Change Charge.

(3) Except as otherwise specified in (A)(1) preceding, a Service Date Change Charge will apply, on a per order per occurrence basis, for each service date changed after the Plant Test Date of the ASR. The applicable charge is:

	CHARGE
Service Date Change Charge, per order	$28.00

(B) (Reserved for Future Use)

© 2022 Frontier Communications Parent, Inc. All rights reserved.

ACCESS SERVICE

5. **Ordering Special Access Service** (Cont'd)

5.3 **Access Order Charges** (Cont'd)

5.3.1 **Access Service Request Modifications** (Cont'd)

(C) Design Change Charge

The customer may request a design change to the service ordered. A design change is any change to an Access Service Request which requires engineering review. An engineering review is a review by Telephone Company personnel, of the service ordered and the requested changes to determine what changes in the design, if any, are necessary to meet the changes requested by the customer. Design changes include such things as the addition or deletion of optional features or functions or a change in the signaling arrangements associated with Switched Access Entrance Facility interface groups. Design changes do not include a change of Switched Access Entrance Facility type, end user premises, end office switch, Feature Group or BSA type or Special Access Service circuit type. Changes of this nature will require the issuance of a new order and the cancellation of the order with appropriate cancellation charges applied.

The Telephone Company will review the requested change, notify the customer whether the change is a design change, if it can be accommodated and if a new service date is required. If the customer authorizes the Telephone Company to proceed with the design change, a Design Change Charge will apply. The Design Change Charge will apply on a per order per occurrence basis, for each order requiring a design change. The applicable charge is:

	Rate	
Design Change Charge, per order, per occurrence	$441.05	(C)

If a change of service date is required, the Service Date Change Charge as set forth in (A) preceding will also apply.

© 2024 Frontier Communications Parent, Inc. All rights reserved.

ACCESS SERVICE

5. Ordering Special Access Service (Cont'd)

5.3 Access Order Charges (Cont'd)

5.3.1 Access Service Request Modification (Cont'd)

(D) Expedited Order Charge

When placing an Access Service Request a customer may request a service date that is prior to the Telephone Company's published service date interval. If the Telephone Company determines that the service can be provided on the requested date, an Expedited Order Charge will apply.

A customer may also request an earlier service date on a pending Access Service Request. If the customer's request can be accommodated, a Service Date Change Charge as described in Section 5.3.1(A) will apply in addition to the Expedited Order Charge.

If the Telephone Company is subsequently unable to meet an agreed upon expedited service date, the Expedited Order Charge will not apply.

In the event that the Telephone Company provides service on an expedited basis by customer request and the customer then delays service, an additional Service Date Change Charge as described in Section 5.3.1(A) will apply.

The Expedited Order Charge applies per order, based on the requested service date. A request to expedite service to be available the next day is a one day expedite, a request for service in two days is a two day expedite, and so on to a request for service a week from the request date is a seven day expedite. A request for an expedite of more than seven days will be billed the seven day expedite rate. Expedited orders for same day service are not available. If the requested service date is at the published service date interval or later, no Expedited Order Charge will apply.

Access Ordering Guidelines prohibit expedite orders when disconnecting services (N)

Rates for Expedited Order Charges are as follows:

© 2024 Frontier Communications Parent, Inc. All rights reserved.

ACCESS SERVICE

5. **Ordering Special Access Service** (Cont'd)

5.3 **Access Order Charges** (Cont'd)

5.3.1 **Access Service Request Modification** (Cont'd)

(D) Expedited Order Charge (Cont'd)

	Arizona	California	Illinois
One Day Expedite	$1,500.00	$1,500.00	$1,500.00
Two Day Expedite	1,297.15	1,234.38	1,219.18
Three Day Expedite	1,094.30	968.75	938.35
Four Day Expedite	891.45	703.13	699.26
Five Day Expedite	794.65	646.24	699.26
Six Day Expedite	776.58	592.88	683.57
Seven Day Expedite	758.52	539.52	667.88

	Indiana	Nevada	North Carolina
One Day Expedite	$1,500.00	$1,500.00	$1,500.00
Two Day Expedite	1,223.93	1,297.15	1,246.65
Three Day Expedite	947.85	1,094.30	993.30
Four Day Expedite	688.38	891.45	757.36
Five Day Expedite	688.38	794.64	757.36
Six Day Expedite	672.24	776.68	740.15
Seven Day Expedite	657.09	758.52	722.93

(D)
(D)
(D)
(D)
(D)
(D)
(D0
(D)
(D)

© 2022 Frontier Communications Parent, Inc. All rights reserved.

ACCESS SERVICE

5. **Ordering Special Access Service** (Cont'd)

5.3 **Access Order Charges** (Cont'd)

5.3.2 **Cancellation of an Access Service Request**

A customer may cancel an Access Service Request on any date after receipt of the Access Service Request by the Telephone Company and prior to the installation of service. The cancellation date is the date the Telephone Company receives written or verbal notice from the customer that the Access Service Request order is to be canceled. The verbal notice must be followed by written confirmation within 10 days. If written confirmation of the cancellation is not received by the Telephone Company, the verbal notice will not be considered a valid cancellation notice. When a customer cancels an Access Service Request for the discontinuance of service, no charges apply for the cancellation.

(A) Delay of Service Date by Customer

Subject to Section 5.3.1 preceding, a customer may negotiate an extension of a service date of an Access Order for installation of new services or rearrangements of existing services.

(B) Delay of Service Date by Telephone Company

If the Telephone Company misses a service date by more than 30 days due to circumstances over which it has direct control (excluding, e.g., Acts of God, governmental requirements, work stoppages and civil commotions), the customer may cancel the Access Service Request without incurring cancellation charges.

© 2022 Frontier Communications Parent, Inc. All rights reserved.

ACCESS SERVICE

5. **Ordering Special Access Service** (Cont'd)

5.3 **Access Order Charges** (Cont'd)

5.3.2 **Cancellation of an Access Service Request** (Cont'd)

(C) Cancellation Charge

When a customer cancels an Access Service Request prior to the service date, the Cancellation Charge specified in (1) through (5) following, shall apply.

(1) When an ASR for Special Access Service is canceled on or after the Application Date, except where there is a specific cancellation charge set forth such as after the 30th day, the Cancellation Charge is the Nonrecurring Charge for the service(s) multiplied by the quantity ordered on a per ASR basis. (C) (C) (C)

(2) For services specified in 3 through 5 following: the cancellation charge is the charge shown for the last date passed on the order and will apply when a customer cancels an order or part of an order prior to accepting service.

Dedicated SONET Optical Transport Service (DSOTS)

Category I

Cancellation Charges Which Apply After the Order Date

(3)

	31st to 60th day after ordering	61st day after ordering to completion of Ring
- per Primary Node	$13,000.00	$26,000.00
- per Expansion Node	26,000.00	52,000.00
- per Mid-span Amp.	5,600.00	10,600.00
- per Node Amp.	5,600.00	10,600.00

© 2022 Frontier Communications Parent, Inc. All rights reserved.

ACCESS SERVICE

5. **Ordering Special Access Service** (Cont'd)

5.3 **Access Order Charges** (Cont'd)

5.3.2 **Cancellation of an Access Service Request** (Cont'd)

(C) Cancellation Charge (Cont'd)

(3) Dedicated SONET Optical Transport Service (DSOTS) (Cont'd)

Category II

Cancellation Charges Which Apply After the Order Date

	31st to 60th day after ordering	61st day after ordering to completion of Ring
- per Primary Node	$13,000.00	$26,000.00
- per Expansion Node	26,000.00	52,000.00
- per Mid-span Amp.	5,600.00	10,600.00

(4) Dedicated SONET Ring (DSR)

Cancellation Charges Which Apply Prior to Issuance of ASR or Following Notification that Construction is Complete: per Node, Port Node, or per High Speed Interface

	31st to 60th day after ordering	61st day after ordering completion of construction
- per OC3 Node/ High Speed Interface	$565.00	$1,130.00
- per OC12 Node/ High Speed Interface	962.00	1,924.00
- per OC48 Node/ High Speed Interface	2,159.00	4,318.00
- per OC192 Node/ High Speed Interface	7,010.00	14,020.00

© 2022 Frontier Communications Parent, Inc. All rights reserved.

ACCESS SERVICE

5. **Ordering Special Access Service** (Cont'd)

5.3 **Access Order Charges** (Cont'd)

5.3.2 **Cancellation of an Access Service Request** (Cont'd)

(4) Dedicated SONET Ring (DSR) (Cont'd)

Cancellation Charges Which Apply After Issuance of ASR or Following Notification that construction is Complete: per Node, Port Node, or per High Speed Interface

	All Critical Dates
- per OC3 Node	$1,130.00
- per OC12 Node	1,924.00
- per OC48 Node	4,318.00
- per OC192 Node	14,020.00

(5) Ethernet Private Line (per channel extension)

	31st to 60th day after ordering	61st day after ordering to completion of circuit
- 10-Mbps, 100-Mbps, or 1-Gbps Ethernet		
- 10-Mbps Ethernet Mapped to STS-1		
- 100-Mbps Ethernet Mapped to STS-1 or OC3c		
- 1-Gbps Ethernet Mapped to OC3, OC12, OC12c, or OC48	$175.00	$350.00

(6) Ethernet Private Line (per Access Aggregation Port)

- OC3 Aggregation Port		
- OC12 Aggregation Port		
- OC48 Aggregation Port	$175.00	$350.00

(7) Dedicated SONET Entrance Facilities
Cancellation Charges Which Apply After the Order Date

- per STS1 IEF Termination	$ 1,000.00

(D) Partial Cancellation Charge

Any decrease in the number of ordered Special Access Service circuits, trunks or busy hour minutes of capacity, or STP Port Terminations and CCS7 Access Service facilities, on a pending ASR will be treated as a partial cancellation. The charge will be determined by multiplying the total switched access installation or special access nonrecurring charge for the canceled portion of the order by the number of business days elapsed since the order date and dividing that figure by the number of days in the service interval.

© 2022 Frontier Communications Parent, Inc. All rights reserved.

ACCESS SERVICE

5. **Ordering Special Access Service** (Cont'd)

5.3 **Access Order Charges** (Cont'd)

5.3.3 **Minimum Period Charges**

(A) When Access Service is disconnected prior to the expiration of the minimum period, charges are applicable for the balance of the minimum period. A disconnect constitutes facilities being returned to available inventory.

For purposes of applying minimum period charges, the disconnect date shall be thirty (30) business days after the date (C) the Telephone Company receives written notification from the customer or the date the customer requests service be disconnected if longer than 30 business days. (C)

(B) Except as specifically stated in other sections of this Guide, the Minimum Period Charge for monthly billed services will be determined as follows:

For Special Access Service, the charge for a month or fraction thereof is the applicable monthly rates for the service as set forth in 7.2.2 following.

The Minimum Period Charge for part-time Television and Program Audio Services is the applicable daily rate for the service as set forth in 7.2.2 following.

For Optical Networking services, the charge is the applicable monthly rate as set forth in 20.2 following.

© 2024 Frontier Communications Parent, Inc. All rights reserved.

ACCESS SERVICE

6. RESERVED

© 2022 Frontier Communications Parent, Inc. All rights reserved.

ACCESS SERVICE

7. Special Access Service

7.1 Provision of Special Access Service

Special Access Service provides a dedicated transmission path to connect customer designated premises*, either directly or through a Telephone Company hub where bridging or multiplexing functions are performed or to connect a customer's transmission equipment and facilities using a DS1 or DS3 Cross Connect arrangement where the customer is provided Expanded Interconnection Service (EIS) as defined in Section 17. Special Access Service may also be combined with Switched Access Services in the provision of a customer's interstate communications service (e.g., WATS, 800, 888 or WATS-type Services). Special Access Service includes all exchange access not utilizing Telephone Company central office switches.

Certain Special Access Services listed in this section of the tariff may not be currently offered in all Telephone Company locations but may be provided upon customer request, on an individual case basis, if facilities can be made available with reasonable effort. The Telephone Company will work cooperatively with the Customer to provide the service on a timely basis.

7.1.1 Circuit Types

There are nine types of circuits used to provide Special Access Services:

- Metallic (MT)
- Telegraph Grade (TG)
- Voice Grade (VG)
- Program Audio (AP)
- Video Digital Transport Service TV-1 Analog (TV)
- Wideband Analog (WA)
- Wideband Data (WD)
- Digital Data (DA)
- High Capacity (HC)
- LAN Extension Service (LES)

These circuits can be either analog or digital. Analog circuits are differentiated by frequency spectrum and bandwidth. Digital connections are differentiated by bit rate.

* Telephone Company Centrex CO-like switches are considered to be customer premises for purposes of this Guide.

© 2022 Frontier Communications Parent, Inc. All rights reserved.

ACCESS SERVICE

7. **Special Access Service** (Cont'd)

7.1 **Provision of Special Access Service** (Cont'd)

7.1.1 **Circuit Types** (Cont'd)

Each of the nine circuits has its own characteristics. All of the circuit types are subdivided by one or more of the following:

- Transmission specifications,
- Bandwidth,
- Speed (i.e., bit rate),
- Spectrum

The circuit descriptions set forth in this section specify the characteristics of the basic circuit and indicates whether the circuit is provided between customer designated premises or between a customer designated premises and a Telephone Company hub where bridging or multiplexing functions are performed, or between a customer designated premises and a Telephone Company WATS Serving Office.

Customers can order a basic circuit and select from a list of available technical specifications packages (customized or predefined), channel interfaces, and optional features to design a circuit which meets the Customer's specific communications needs. For purposes of ordering circuits, each has been identified as a type of Special Access circuit. However, such identification is not intended to limit a customer's use of the circuit, nor to imply that a circuit is limited to a particular use.

The optional features and functions available with each type of basic circuit are included in the individual service description sections following. The optional features and functions information also indicates with which technical specifications packages they are available.

When a customized circuit is ordered, the Telephone Company may determine that Additional Engineering is required to meet the customer's request for service. The customer will be notified whether Additional Engineering charges apply and will be given an estimate of the hours to be billed before any further action is taken on the order. Additional engineering charges are determined as set forth in 8. 1 following.

© 2022 Frontier Communications Parent, Inc. All rights reserved.

ACCESS SERVICE

7. **Special Access Services** (Cont'd)

7.1 **Provision of Special Access Service** (Cont'd)

7.1.2 **Service Configurations**

There are two types of service configurations over which Special Access Services are provided: two-point service and multipoint service.

(A) Two-Point Service

A two-point service connects two customer designated premises, either on a directly connected basis or through a hub where multiplexing functions are performed. A Voice Grade Special Access Circuit may be provided as a two-point service connecting an end user premise and a Telephone Company switch when Special Access is used in conjunction with Switched Access as set forth in 6.3.2(T) for Switched Access Interface Arrangements.

All types of Special Access Service may be provided as two-point service.

The following diagram depicts an example of a two-point Voice Grade service connecting two customer designated premises located 15 miles apart. The service is provided with the optional feature of C-Type conditioning.

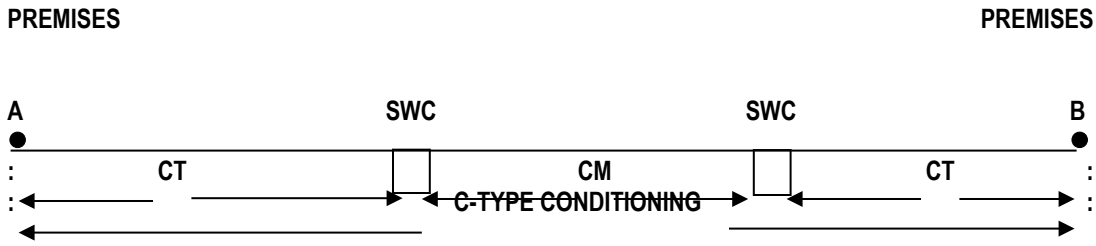

CT - Circuit Termination
CM - Circuit Mileage
SWC - Serving Wire Center

Applicable rate elements are:

- Circuit Termination (2 applicable)
- Circuit Mileage (fixed rate plus rate per airline mile between SWC)
- C-Type Conditioning Optional Feature

In addition, a Special Access Surcharge and charges for additional Optional Features and Functions may apply.

© 2022 Frontier Communications Parent, Inc. All rights reserved.

ACCESS SERVICE

7. **Special Access Services** (Cont'd)

7.1 **Provision of Special Access Service** (Cont'd)

7.1.2 **Service Configurations** (Cont'd)

(B) Multipoint Service

Multipoint service connects three or more customer designated premises through a Telephone Company hub (i.e., bridging locations). Only certain types of Special Access Service are provided as multipoint service. These are so designated in the Service Descriptions for the appropriate circuit.

The circuit between hubs on a multipoint service is a mid-link. There is no limitation on the number of mid-links, but the use of more than three mid-links in tandem may degrade the quality of multi-point facilities.

Multipoint service utilizing a customized technical specifications package, as set forth in 7.1.3, will be provided when technically possible.

When ordering, the customer will specify the desired bridging hub(s). National Exchange Carrier Association Tariff FCC No. 5 identifies serving wire centers, hub locations and the type of bridging functions available.

© 2022 Frontier Communications Parent, Inc. All rights reserved.

ACCESS SERVICE

7. **Special Access Services** (Cont'd)

7.1 **Provision of Special Access Service** (Cont'd)

7.1.2 **Service Configurations** (Cont'd)

(B) Multipoint Service (Cont'd)

The following diagram depicts an example of a Voice Grade multipoint service connecting four customer premises via two customer specified bridging hubs.

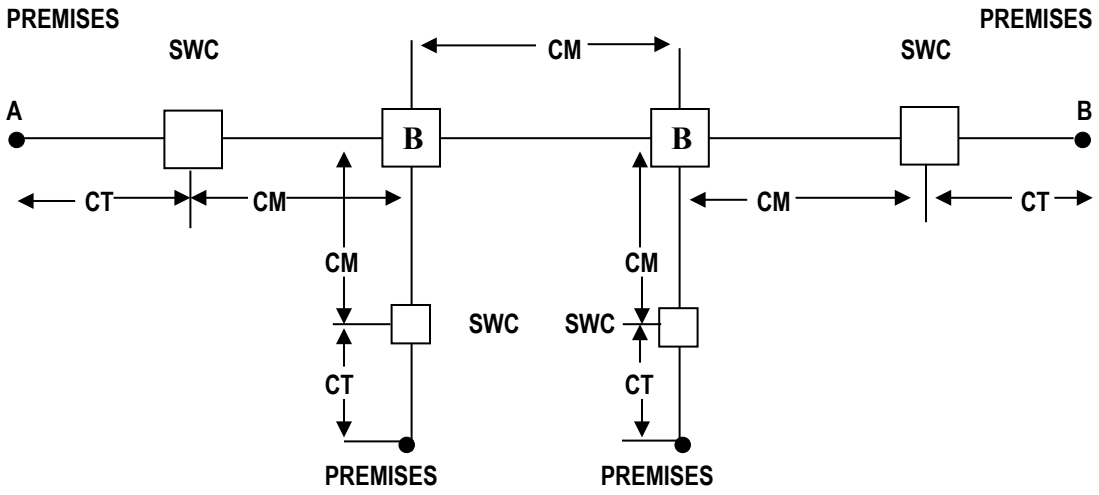

CT - Circuit Termination
CM - Circuit Mileage
B - Bridging
SWC - Serving Wire Center

Applicable rate elements are:
- Circuit Termination (4 applicable)
- Circuit Mileage (5 sections-fixed rate plus rate per mile between SWC)
- Bridging Optional Features (6 applicable, i.e., each bridge port)

In addition, the Special Access Surcharge, Message Station Equipment Recovery Charge, and charges for other Optional Features and Functions may be applicable.

© 2022 Frontier Communications Parent, Inc. All rights reserved.

ACCESS SERVICE

7. **Special Access Services** (Cont'd)

7.1 **Provision of Special Access Service** (Cont'd)

7.1.3 **Technical Specifications Packages**

Information pertaining to the technical specifications packages indicates the transmission parameters that are available with each package. This information is included in each individual service description section in 7.3 through 7.10 following, in a matrix format with the transmission parameters listed down the left side and the packages listed across the top. Each package is identified by a code, e.g., VGC. The first two letters of the code indicate the category of Special Access Service to which the parameters are applicable. These two letter codes are shown above in parentheses following the category of Special Access Service.

The letter "C" following the two letter code indicates the technical specifications package for a customized service. A numeric or alpha-numeric designation following the two letter code indicates the specific predefined package. For a customized service, the customer may select any parameters available with that category of service as long as the parameters are compatible. When appropriate, the Technical Reference which contains detailed specifications for the parameters is shown following the matrix.

All services installed after the effective date of this Guide will conform to the transmission specification standards contained in this Guide or in the following Technical References for each category of service:

Metallic	TR-NPL-000336
Telegraph Grade	TR-NPL-000336
Voice Grade	TR-NWT-000335, Issue 3 PUB 41004, Table 4
Program Audio	GR- 337-CORE, Issue 1
Video	GR- 338-CORE, Issue 1
Wideband Analog	TR-NPL-000339
Wideband Data	TR-NPL-000340
Digital Data	TR-NWT-000341, Issue 2 PUB 62310
High Capacity	GR-342-CORE, Issue 1 GR-54-CORE, Issue 1

© 2022 Frontier Communications Parent, Inc. All rights reserved.

ACCESS SERVICE

7. **Special Access Services** (Cont'd)

7.1 **Provision of Special Access Service** (Cont'd)

7.1.3 **Technical Specifications Packages** (Cont'd)

The Telephone Company will maintain existing transmission specifications on services installed prior to the effective date of this Guide, except that existing services with performance specifications exceeding the standards listed in this provision will be maintained at the performance levels specified in this Guide.

Customized technical specifications packages will be provided where technically feasible. If the Telephone Company determines that the requested parameter specifications are not compatible, the customer will be advised and given the opportunity to change the order.

© 2022 Frontier Communications Parent, Inc. All rights reserved.

ACCESS SERVICE

7. **Special Access Service** (Cont'd)

7.1 **Provision of Special Access Service** (Cont'd)

7.1.4 **Channel Interfaces**

Channel interfaces at each point of termination on a two-point service may be symmetrical or asymmetrical. On a multipoint service they may also be symmetrical or asymmetrical, but communications can only be provided between compatible channel interfaces. Only certain channel interfaces are compatible. These are set forth in 9. following, in a combination format.

Only certain channel interface combinations are available with the predefined technical specifications packages. These are delineated in the Technical References set forth in 7.1.3 preceding. When a customized circuit is requested, all channel interface combinations available with the specified type of service are available with the customized circuit.

7.1.5 **Alternate Use**

Alternate Use occurs when a service is arranged by the Telephone Company so that the customer can select different types of transmission at different times. A customer may use a service in any privately beneficial manner. However, where technical or engineering changes are required to effectuate an alternate use, the Telephone Company will make such special arrangements available on an individual case basis.

The arrangement required to transfer the service from one operation to the other (i.e., the transfer relay and control leads) will be rated and provided on an individual case basis and filed in Section 12., Specialized Service or Arrangements. The customer will pay the stated tariff rates for the Access Service rate elements for the service ordered (i.e., Circuit Terminations, Circuit Mileage [as applicable] and Optional Features and Functions [if any].

7.1.6 **Special Facilities Routing**

A customer may request that the Special Access used be specially routed. The regulations, rates and charges for Special Facilities Routing are as set forth in Section 11. following.

© 2022 Frontier Communications Parent, Inc. All rights reserved.

ACCESS SERVICE

7. **Special Access Service** (Cont'd)

7.1 **Provision of Special Access Service** (Cont'd)

7.1.7 **Design Layout Report**

At the customer request, the Telephone Company will provide the make-up of the facilities and services provided under this Guide as Special Access Service to aid the customer in designing its overall service. The information will be provided to the customer at no charge in the form of a Design Layout Report and will be reissued or updated whenever the described facilities are materially changed.

7.1.8 **Acceptance Testing**

At the customer's request, the Telephone Company will cooperatively test, at the time of installation and at no additional charge, the following parameters:

(A) For Voice Grade analog services, acceptance testing will include tests for loss, 3-tone slope, DC continuity, operational signaling, C-notched noise, and C-message noise as applicable according to the order for service. Voice Grade services acceptance testing will also include a balance (improved loss) test if the customer has ordered that optional feature.

(B) For services other than Voice Grade, acceptance tests will include tests for the parameters applicable to the service as specified by the customer in the order for service.

In addition to the above tests, Additional Cooperative Acceptance Testing and Nonscheduled Testing, as described in 8.4 following, are available at the customer's request. All test results will be made available to the customer upon request.

© 2022 Frontier Communications Parent, Inc. All rights reserved.

ACCESS SERVICE

7. **Special Access Service** (Cont'd)

7.1 **Provision of Special Access Service** (Cont'd)

7.1.9 **Jurisdictional Determination**

(A) Special Access circuits carrying exclusively interstate traffic will be provided in accordance with the applicable rules and regulations of this Guide.

When mixed interstate and intrastate Special Access Service is provided, the jurisdiction will be determined as follows:

(1) If the customer's estimate of the interstate traffic on the circuit involved constitutes 10% or less of the total traffic on that circuit, the circuit will be provided in accordance with the applicable rules and regulations of the appropriate intrastate tariff.

(2) If the customer's estimate of the interstate traffic on the circuit involved constitutes more than 10% of the total traffic on that circuit, the circuit will be provided in accordance with the applicable rules and regulations of this Guide.

(B) If a billing dispute arises or a regulatory commission questions the reported jurisdiction, the Telephone Company will ask the customer to provide the information the customer uses to determine the jurisdiction of the circuit. The customer shall supply the information within 30 days of the Telephone Company request. The customer shall keep records of system design and functions from which the jurisdiction of its special access circuits can be ascertained. Upon request of the Telephone Company the customer shall make the records available for inspection as reasonably necessary for purposes of verification of the reported jurisdiction.

(C) Customer certification of the jurisdiction of special access circuits is accomplished by indicating the jurisdiction of the circuit (interstate or intrastate) on the Access Service Request. Customer certification of the jurisdiction of special access circuits in place as of the effective date of these revisions shall be provided to the Telephone Company in the form of written correspondence indicating the jurisdiction of each special access circuit.

© 2022 Frontier Communications Parent, Inc. All rights reserved.

ACCESS SERVICE

7. **Special Access Service** (Cont'd)

7.1 **Provision of Special Access Service** (Cont'd)

7.1.9 **Jurisdictional Determination** (Cont'd)

(D) Customers reporting a change in the jurisdiction of special access circuits subject to individual case basis (ICB) rates and charges set forth in this Guide will not be subject to termination liability charges unless the change results in the termination of the service.

7.1.10 **Interzone Service**

Interzone Service provides the transmission facilities for DS1 and DS3 Special Access between two service areas within a state in association with two customer designated locations within different service areas. The Circuit Mileage will be applied as set forth under 7.2.1(B).

Interzone Service is available between the following service areas, where facilities and conditions permit.

State	Location "A"	CLLI Code	Location "Z"	CLLI Code
Illinois**	Bloomington #	BLTNILXD	Rantoul #	RNTLILXC
	Carbondale #	CRDLILXE	Olney #	OLNYILXE
	Dekalb #	DKLBILXA	Freeport #	FRPTILXA
	Olney	OLNYILXE	Rantoul	RNTLILXC
Indiana**	Elkhart #	ELKHTINXA	Fort Wayne #	FTWYINXA
	Fort Wayne	FTWYINXA	Lafayette #	LFYTINXA
	Jasper	JSPRINXA	Seymour	SYMRINXA
	Jasper	JSPRINXA	Terre Haute #	TRRHINXA
Michigan**	Alma #	ALMAMIXG	Muskegon #	MSKGMIXK

* Available for DS1 and DS3 Special Access Service only
** Available for DS1 Special Access Service only
# The Telephone Companies' Office

© 2022 Frontier Communications Parent, Inc. All rights reserved.

ACCESS SERVICE

7. Special Access Service (Cont'd)

7.2 Rate Categories, Applications and Regulations

This section contains the specific regulations governing the rates and charges that apply for Special Access.

7.2.1 Rate Categories

The following rate categories apply to Special Access Service:

- Circuit Terminations
- Circuit Mileage
- Optional Features and Functions
- Non Recurring Charges
- Special Access Surcharge
- Special Access Cross Connect
- Term Payment Plan (TPP) - DS1
- Optional Payment Plan (OPP) - Fractional T1

These rate categories are described in Sections 7.2.1. (A) through (H) following.

Additionally, rates and charges for Integrated Optical Service Riders may also apply to Special Access connected to Integrated Optical Service Riders as set forth in Section 23.1 following.

The following is the Telephone Company's Open Network Architecture (ONA) Special Access Basic Serving Arrangement which provides a cross-reference to the generic ONA product name.

Generic Name	The Telephone Company's Name
Dedicated Alert Transport	Alarm Signal Transport Service

The following is a list of the Telephone Company's Open Network Architecture (ONA) Special Access Basic Service Elements (BSEs) which provide a cross-reference to the generic ONA product names.

Generic Name	The Telephone Company's Name
Automatic Protection Switching	Automatic Loop Transfer
Bridging	Bridging
Conditioning	Conditioning
Multiplexing - Digital 2000	Multiplexing Arrangements

© 2022 Frontier Communications Parent, Inc. All rights reserved.

ACCESS SERVICE

7. Special Access Service (Cont'd)

7.2 Rate Categories, Applications and Regulations (Cont'd)

7.2.1 Rate Categories (Cont'd)

(A) Circuit Termination

The Circuit Termination rate category provides for the communications path between a customer designated premises and the serving wire center of that premises. Included as part of the Circuit Termination is a standard channel interface arrangement which defines the technical characteristics associated with the type of facilities to which the access service is to be connected at the Point of Termination (POT) and the type of signaling capability, if any. The signaling capability itself is provided as an optional feature as set forth in (C) following. One Circuit Termination charge applies per customer designated premises at which the circuit is terminated. This charge will apply even if the customer designated premises and the serving wire center are co-located in a Telephone Company building. Connection to Telephone Company provided DS1 or DS3 Circuit Terminations within a serving wire center for customers with EIS will require a Special Access Cross Connect arrangement as described in 7.2.1(F). Circuit Termination rates for DS3 High Capacity Services vary with the number of services and/or level of capacity as set forth in Section 7.2.6 following.

© 2022 Frontier Communications Parent, Inc. All rights reserved.

ACCESS SERVICE

7. **Special Access Service** (Cont'd)

7.2 **Rate Categories, Applications, and Regulations** (Cont'd)

7.2.1 **Rate Categories** (Cont'd)

(B) Circuit Mileage

The Circuit Mileage rate category provides for the end office equipment and transmission facilities between serving wire centers and/or Telephone Company hubs. In addition, when Special Access is used in conjunction with Switched Access Service as set forth in 6.3.2 preceding for Switched Access Interface Arrangements*, and the end office serving the customer's end user premises is not a WATS Serving Office, Circuit Mileage is used to extend the Special Access Circuit to a WATS Serving Office. Connection to Telephone Company provided DS1 or DS3 Circuit Mileage within a serving wire center for customers with EIS will require a Special Access Cross Connect arrangement as described in 7.2.1(F). The Circuit Mileage charge is composed of a flat monthly charge plus a rate per mile.

For Fractional T1 Service, Circuit Mileage must be ordered as Fractional Circuit Mileage in the same grouping (N x 56 Kbps or N x 64 Kbps where N = 2, 4, or 6) as the associated FT1 Circuit Terminations.

* Circuit Mileage for DS1 and DS3 Special Access, when used with Switched Access, is not available for arrangements between service areas listed under 7.1.10.

© 2022 Frontier Communications Parent, Inc. All rights reserved.

ACCESS SERVICE

7. **Special Access Service** (Cont'd)

7.2 **Rate Categories, Applications, and Regulations** (Cont'd)

7.2.1 **Rate Categories** (Cont'd)

(B) Circuit Mileage (Cont'd)

(1) Fixed Rate

The fixed rate component of Circuit Mileage is applied only once per Circuit Mileage facility. When two or more customer designated premises are served by a common serving wire center (i.e., mileage is zero) the fixed rate component is not applied. Except when served by a common serving wire center, the Circuit Mileage-Fixed charge is applied in full whether the Telephone Company provides one or more than one circuit mileage facility terminations. The Circuit Mileage-Fixed rate does not apply when the Telephone Company provides only an intermediate portion of a circuit mileage facility and no circuit mileage facility terminations. When Special Access is used in conjunction with Switched Access* where the customer's end user premises for the Special Access facility is served by a Telephone Company WATS Serving Office, the fixed rate does not apply.

(2) Per Mile Rate

The mileage to be used to determine the monthly rate for the per mile portion of Circuit Mileage is calculated on the airline distance between the serving wire centers associated with two customer designated premises, between a serving wire center associated with a customer designated premises and a Telephone Company hub, between two Telephone Company hubs, or between a Telephone Company end office and a WATS serving office. The serving wire center associated with a customer designated premises is the serving wire center from which this customer designated premises would normally receive dial tone. The methodology for mileage calculation and serving wire center V&H coordinates are specified in National Exchange Carrier Association Tariff FCC. No. 4. Where the calculated miles include a fraction, the value is always rounded up the next full mile.

When hubs are involved, mileage is computed and rates applied separately for each section of the Circuit Mileage, i.e., customer designated premises serving wire center to hub, hub to hub and/or hub to customer designated premises serving wire center. However, when any service is routed through a hub for purposes other than customer specified bridging or multiplexing (e.g., the Telephone Company chooses to so route for test access purposes), rates will be applied only to the distance calculated between the serving wire centers associated with the customer designated premises.

When more than one Telephone Company is involved in the provision of Special Access Service, the mileage for the per mile component of Circuit Mileage for each Telephone Company is calculated as set forth in 2.4.7 preceding.

© 2022 Frontier Communications Parent, Inc. All rights reserved.

ACCESS SERVICE

7. **Special Access Service** (Cont'd)

7.2 **Rate Categories, Applications, and Regulations** (Cont'd)

7.2.1 **Rate Categories** (Cont'd)

(C) Optional Features and Functions

Optional Features and Functions may be added to a basic circuit service to improve its quality or utility to meet the customer's specific communications requirements. These optional features and functions are identifiable with specific equipment, and represent the end result in terms of performance characteristics which may be obtained. These characteristics may be obtained by using various combinations of equipment. Although the equipment necessary to perform a specified function may be installed at various locations along the path of the service, they will be charged for a single rate element.

Descriptions for each of the available Optional Features and functions are set forth in Sections 7.3 through 7.11 following. Specific rate applications for multiplexing are set forth in 7.2.5 following.

(D) Nonrecurring Charge

Nonrecurring charges are one-time charges that apply for installation of Special Access Services, installation of optional features and functions, and moves and service rearrangements.

(1) Installation of Service

Nonrecurring charges apply to each service installed. The nonrecurring charges for the installation of service are applied per Circuit Termination.

Two levels of charges apply for the installation of a three or twelve capacity DS3 High Capacity system as set forth in Section 7.2.6 (A) following. A nonrecurring charge applies for the first Circuit Termination ordered by the customer and a separate nonrecurring charge will apply to each additional Circuit Termination to be installed within the same three or twelve capacity system between the same customer locations. For individual noncapacity DS3 service, the nonrecurring charge for each installation will apply at the same rate per DS3 Circuit Termination.

Customers subscribing to the Fractional T1 OPP arrangements, at rates set forth in 7.11.5(A), will not be assessed a nonrecurring charge.

The Regulations in Section7.2.1(D)(3) will apply to FT1 OPP customers when required for charges and other service rearrangements.

© 2022 Frontier Communications Parent, Inc. All rights reserved.

ACCESS SERVICE

7. **Special Access Service** (Cont'd)

7.2 **Rate Categories, Applications, and Regulations** (Cont'd)

7.2.1 **Rate Categories** (Cont'd)

(D) Nonrecurring Charge (Cont'd)

(2) Installation of Optional Features and Functions

Nonrecurring charges apply for the installation of some of the optional features and functions available with Special Access Service. The charge applies whether the feature or function is installed coincident with the initial installation of service or at any time subsequent to the installation of the service.

The optional features for which non-recurring charges apply are:

- Voice Grade Data Capability
- Voice Grade Telephoto Capability
- Program Audio Gain Conditioning
- Program Audio Stereo
- Wideband Data Transfer Arrangement

(3) Service Rearrangements

Service rearrangements are changes to existing (installed) services which may be administrative only in nature, or that involve actual physical change to the service. Changes to pending orders are set forth in 5.3.1 preceding.

Changes in the type of service will be treated as a discontinuance of the service and an installation of a new service.

Changes in the physical location of the point of termination are treated as moves which are described and charged for as in 7.2.1(D)(4).

Administrative changes will be made without charge(s) to the customer.

(a)

© 2022 Frontier Communications Parent, Inc. All rights reserved.

ACCESS SERVICE

7. **Special Access Service** (Cont'd)

7.2 **Rate Categories, Applications, and Regulations** (Cont'd)

7.2.1 **Rate Categories** (Cont'd)

(D) Nonrecurring Charge (Cont'd)

(3) Service Rearrangements (Cont'd)

(a) (Cont'd)

Administrative changes are as follows:

- Change in name or ownership or transfer of responsibility from one customer to another, provided there is no interruption of use or relocation of Special Access service.
- Change of customer or customer's end user premises address when the change of address is not a result of a physical relocation of equipment,
- Change in billing data (name, address, or contact name or telephone number),
- Change of customer circuit identification,
- Change of billing account number,
- Change of customer test line number,
- Change of customer or customer's end user contact name or telephone number,
- Change of agency authorization, and
- Change in jurisdiction involving no physical changes to the service.

© 2022 Frontier Communications Parent, Inc. All rights reserved.

ACCESS SERVICE

7. **Special Access Service** (Cont'd)

7.2 **Rate Categories, Applications, and Regulations** (Cont'd)

7.2.1 **Rate Categories** (Cont'd)

(D) Nonrecurring Charge (Cont'd)

(3) Service Rearrangements (Cont'd)

(b) All other service rearrangements will be charged for as follows:

- If the change involves the addition of another termination to an existing two-point or multipoint service, installation charges for each location added will apply.

- If the change involves the addition of an optional feature or multiplexing arrangement, the installation charge associated with the optional feature or multiplexing arrangement will apply. When the optional feature or arrangement has no associated nonrecurring charge (or rated at $.00), one circuit termination nonrecurring charge for the type of service involved (i.e., voicegrade circuit termination, DDS circuit termination, etc.) will be applied to the order.

- If the change involves only changing the type of network interface, with no change in facility, the installation charge associated with each service receiving a network interface change will apply.

- If the change involves changing a two-wire service to a four-wire service or vice versa, the installation charge for each location changed will apply.

- If the change involves only rollovers or grooming, then no charges will apply. A rollover is the retermination of a segment of a lower capacity special access service onto a higher capacity special access service. The rollover must occur in the wire center where the higher capacity service is multiplexed with no other changes to the lower capacity service being reterminated (i.e., the segment must not require rerouting to connect to the multiplexer of the higher capacity service).

- Grooming is the retermination of a lower capacity special access service from one channel in a higher capacity special access service to another channel in the same higher capacity service or to another channel in another higher capacity special access service (i.e., change in connecting facility assignment) in the same wire center, with no other changes to the lower capacity service.

© 2022 Frontier Communications Parent, Inc. All rights reserved.

ACCESS SERVICE

7. **Special Access Service** (Cont'd)

7.2 **Rate Categories, Applications, and Regulations** (Cont'd)

7.2.1 **Rate Categories** (Cont'd)

(D) Nonrecurring Charge (Cont'd)

(3) Service Rearrangements (Cont'd)

Rollove – Example 1
Current Configuration

CP = Customer Premises

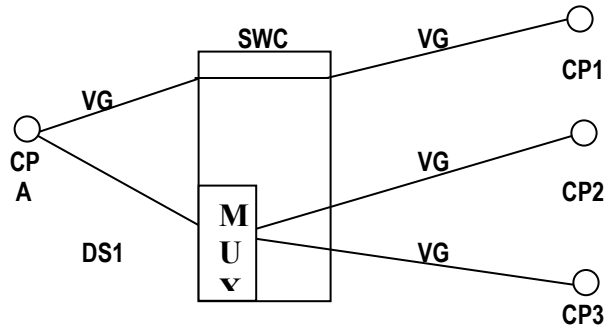

The customer requests that the voiceband circuit (VG) between customer premises A and customer premises 1 be "rolled over" to the DS1 serving customer premises A. No. NRCs apply for this request.

Rollover – Example 1
New Configuration

CP = Cusoter Premises

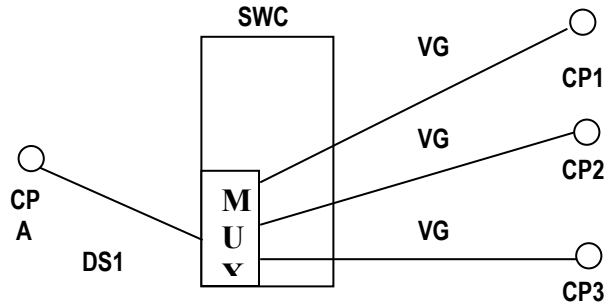

© 2022 Frontier Communications Parent, Inc. All rights reserved.

ACCESS SERVICE

7. **Special Access Service** (Cont'd)

7.2 **Rate Categories, Applications, and Regulations** (Cont'd)

7.2.1 **Rate Categories** (Cont'd)

(D) Nonrecurring Charge (Cont'd)

(3) Service Rearrangements (Cont'd)

Rollover – Example 2
Current Configuration

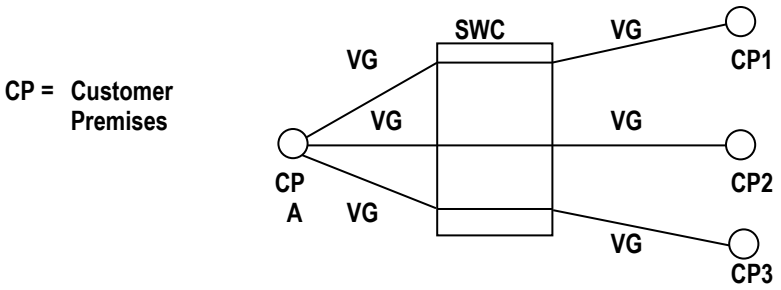

The customer request the installation of DS1 between the serving wire center (SWC) and customer premises A and DS1/Voice multiplexer in the SWC. The customer also request that hte voiceband circuites serving customer premises 1,2 and 3 be "rolled over" to the new DS1. All NRCs aply for the installation of the DS1 and multiplexer. No NRCs apply for the voiceband roll overs to the new high capacity circuit.

Rollover – Example 2
New Configuration

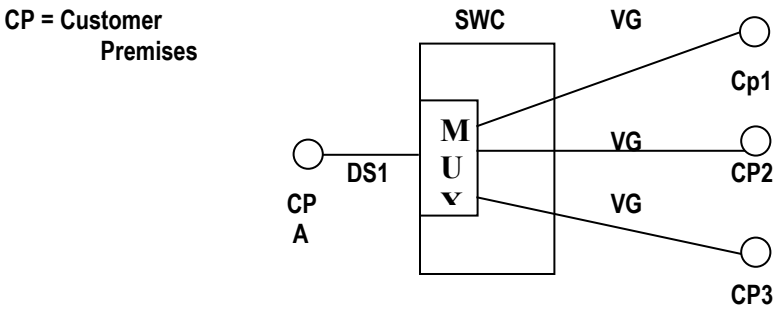

© 2022 Frontier Communications Parent, Inc. All rights reserved.

ACCESS SERVICE

7. **Special Access Service** (Cont'd)

7.2 **Rate Categories, Applications, and Regulations** (Cont'd)

7.2.1 **Rate Categories** (Cont'd)

(D) Nonrecurring Charge (Cont'd)

(3) Service Rearrangements (Cont'd)

Grooming – Example 1
Current Configuration

CP = Customer Premises

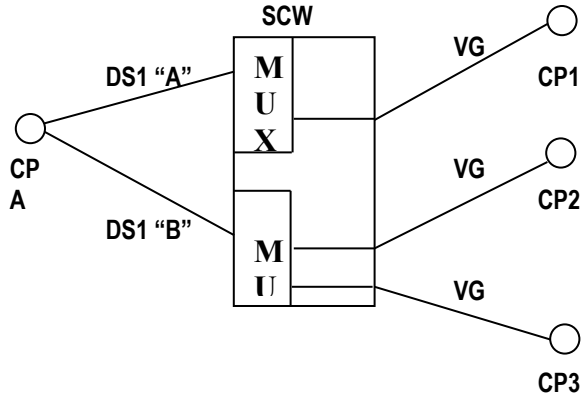

The customer request that the voiceband (VG) circuit serving customer premises 1 be moved from the DS1 "A" circuit to the DS1 "B" circuit. No NRCs apply for this request.

Grooming – Example 1
New Configuration

CP = Customer Premises

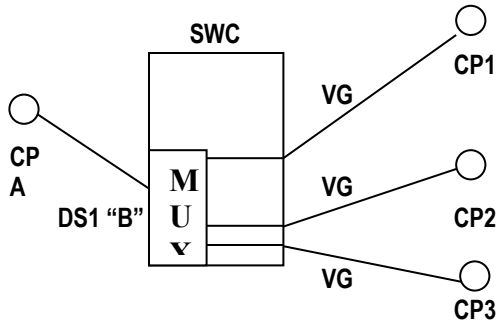

© 2022 Frontier Communications Parent, Inc. All rights reserved.

ACCESS SERVICE

7. **Special Access Service** (Cont'd)

7.2 **Rate Categories, Applications, and Regulations** (Cont'd)

7.2.1 **Rate Categories** (Cont'd)

(D) Nonrecurring Charge (Cont'd)

(3) Service Rearrangements (Cont'd)

Grooming – Example 2
Current Configuration

CP = Customer Premises

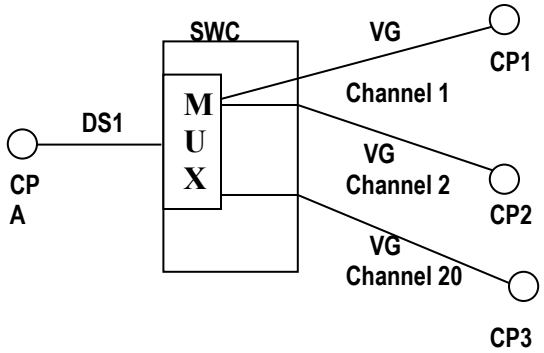

The customer request that the voiceband (VG) circuit serving customer premises 1 be moved from the DS1 "A" circuit to the DS1 "B" circuit. No NRCs apply for this request.

Grooming – Example 2
New Configuration

CP = Customer Premises

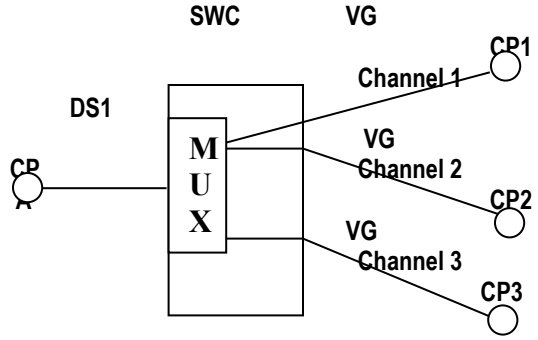

- If the change involves reterminations other than Rollover and/or Grooming, all NRCs associated with the installation of the lower capacity service will apply.

- In cases where multiple service rearrangements or an additional termination or a move and a service rearrangement are requested on a single ASR, the total charge will never exceed the full nonrecurring charge for the basic service.

© 2022 Frontier Communications Parent, Inc. All rights reserved.

ACCESS SERVICE

7. **Special Access Service** (Cont'd)

7.2 **Rate Categories, Applications, and Regulations** (Cont'd)

7.2.1 **Rate Categories** (Cont'd)

(D) Nonrecurring Charge (Cont'd)

(4) Moves

A move involves a change in the physical location of the point of termination of Special Access. A move normally involves an interruption of Special Access for the period required to complete the move. No credit allowance will be granted for that period. Special construction may also be applicable at the different customer premises.

A customer may request that Special Access not be interrupted during a move. To comply with that request, it may be necessary to install a duplicate Special Access, and subsequently discontinue the existing Special Access. Charges, monthly and nonrecurring, will apply for the duplicate Special Access. A new minimum period will be established for the duplicate portion of the Special Access, depending on which end of the Special Access is moved. The customer will remain responsible for all minimum period charges associated with the corresponding portion of the disconnected Special Access.

The charge for the move depends on whether the move is within the same customer premises or to a different customer premises.

(A) Same CDL

When the move of a termination, as defined in Section 2.1.5, for special access is to a new point within the same customer premises (same address and/or same building), the charge for the move will be the installation charge for the portion of the service being reterminated. There will be no change in the minimum period requirements. For services subject to payment plan regulations, the same payment period will remain in force.

© 2022 Frontier Communications Parent, Inc. All rights reserved.

ACCESS SERVICE

7. **Special Access Service** (Cont'd)

7.2 **Rate Categories, Applications, and Regulations** (Cont'd)

7.2.1 **Rate Categories** (Cont'd)

(D) Nonrecurring Charge (Cont'd)

(4) Moves (Cont'd)

(B) Different Customer Premises

(1) When the move is to a different customer premises (different address and different building), except as specified below, it will be treated as a disconnect and an installation of service. The appropriate service installation charge for the service termination(s) affected will apply. A new minimum period will be established for the installed Special Access Service. The customer will remain responsible for all minimum period charges associated with the disconnected Special Access Service. For services subject to payment plan regulations, a new payment plan will be established and full assessment of the remaining liabilities will be applicable.

(2) When the move is to a different customer premises but served by the same serving wire center, the following conditions apply:

- A change ASR will be required.
- The appropriate service installation charge for the service termination(s) affected will apply.
- For Special Access services subject to payment plan regulations, if the customer of record remains the same with no lapse in service, the appropriate NRCs for changes will apply. Otherwise, the move will be treated as a disconnect and an installation of service and all appropriate NRCs and full assessment of the remaining liabilities will be applicable.

(5) Disconnect Non-Recurring Charge (N)

In addition to any other charges associated with discontinuance of services, the Telephone Company will charge a disconnect non-recurring charge to discontinue services. This charge applies on a per circuit basis. The customer shall be responsible for payment of a disconnect non-recurring charge equivalent to one (1) month of recurring charges for the Guide rate elements billed on the circuit immediately prior to disconnect. In addition to the disconnect non-recurring charge, minimum service period charges and early termination liability may apply if the circuit term or minimum service period has not been met. (N)

© 2024 Frontier Communications Parent, Inc. All rights reserved.

ACCESS SERVICE

7. **Special Access Service** (Cont'd)

7.2 **Rate Categories, Applications, and Regulations** (Cont'd)

7.2.1 **Rate Categories** (Cont'd)

(E) Surcharge for Special Access Service

(1) General

Special Access Services provided under this Guide may be subject to the monthly Special Access Surcharge.

(2) Application

The Special Access Surcharge will apply to each interstate Special Access Service that terminates on an end user's PBX or other device where, through a function of the device, the Special Access Service interconnects to the local exchange network. The Surcharge will apply irrespective of whether the interconnection function is performed in equipment located at the customer's premises or in a Centrex CO-type switch.

The monthly Special Access Surcharge applies to special access facilities on a per voice equivalent basis as shown in the following example:

Special Access Facility	Voice Grade Equivalent		Surcharge		Monthly Charge
Group	12	x	$25	=	$300.00
DS1	24	x	$25	=	$600.00

© 2022 Frontier Communications Parent, Inc. All rights reserved.

ACCESS SERVICE

7. **Special Access Service** (Cont'd)

7.2 **Rate Categories, Applications, and Regulations** (Cont'd)

7.2.1 **Rate Categories** (Cont'd)

(E) Surcharge for Special Access Service (Cont'd)

(2) Application (Cont'd)

In the case of multipoint special access facilities, one Special Access Surcharge will apply for each termination of a special access circuit at an end user's premises.

The Telephone Company will bill the customer who orders the special access facility the Special Access Surcharge per installation unless the facility is exempt from the surcharge as set forth in (3) following.

(3) Exemption

The special access facility will be exempted from the monthly surcharge upon receipt of the customer's written certification for the following Special Access Service terminations:

1) an open-end termination in a Telephone Company switch of an FX line, including CCSA and CCSA-equivalent ONALs; or
2) an analog circuit termination that is used for radio or television program transmission; or
3) a termination used for TELEX service; or
4) a termination that by the nature of its operating characteristics could not make use of Telephone Company common lines such as terminations which are restricted through hardware or software; or
5) a termination that interconnects either directly or indirectly to the local exchange network where the usage is subject to Carrier Common Line charges, such as where the special access facility accesses only FGA and no local exchange lines, or special access facility between customer points of termination, or special access facility connecting CCSA or CCSA-type equipment (inter-machine trunks); or a termination that the customer certifies to the Telephone Company is not connected to a PBX or other device capable of interconnecting the special access facility to a local exchange subscriber line.

Written certification for exemption must include the reason the service is exempted from the surcharge using the categories of exemption as stated above. An ASR may be used for exemption certification, provided all information as required by this section is included. The Telephone Company will bill the surcharge to all customers who have not provided valid exemption certification.

© 2022 Frontier Communications Parent, Inc. All rights reserved.

ACCESS SERVICE

7. **Special Access Service** (Cont'd)

7.2 **Rate Categories, Applications, and Regulations** (Cont'd)

7.2.1 **Rate Categories** (Cont'd)

(E) Surcharge for Special Access Service (Cont'd)

(3) Exemption (Cont'd)

The Telephone Company will cease billing the Special Access Surcharge when certification that the Special Access facility has become exempt from the surcharge, as set forth preceding, is received. If the status of the special access facility was changed prior to the receipt of the exemption certification, the Telephone Company will credit the customer's account, not to exceed ninety days, based on the effective date of the change specified by the customer in the letter of certification.

(4)

Rate	Monthly Rate
Surcharge for Special Access Service	
- Applicable to all jurisdictions of the Issuing Carriers listed on Title Pages 2 and 2.1.	
- Per Voice Grade Equivalent	$25.00

(F) Special Access Cross Connect for EIS

The Special Access Cross Connect charge provides the communications path between Telephone Company provided DS0 (DDS operating at 64Kbps or Fractional T1 bandwidths), DS1 or DS3 Circuit Termination or Circuit Mileage and a customer's transmission equipment and facilities where the customer is provided EIS as defined in Section 17. The Special Access Cross Connect charge may also provide the communications path between a customer's transmission equipment and facilities where the customer is provided EIS and EIS arrangements of another customer via Dedicated Transport Service as set forth in Section 19.1. The Special Access Cross Connect is available as DS0, DS1 or DS3 connections. The DS0 Cross Connect can accommodate 64Kbps DDS and Fractional T1 bandwidths of 128 Kbps, 256 Kbps and 384 Kbps. The Cross Connect arrangement may be connected directly to Telephone company provided 64Kbps DDS or Fractional T1/DS0, DS1 or DS3 services or to a Telephone Company provided 64 Kbps DDS or Fractional T1/DS0, DS1, or DS3 multiplexing arrangement. The Cross Connect charge applies per DS0 (64Kbps), DS1, or DS3 connection.

Fractional T1 service can be designed to carry various DS0 combinations. Therefore, The DS0 Cross Connect charge for Fractional T1 will be assessed as follows:

128 Kbps: 2 DS0 Cross Connects
256 Kbps: 4 DS0 Cross Connects
384 Kbps: 6 DS0 Cross Connects

In addition to the Special Access Cross Connect arrangements described herein, Optical Facility Terminations are available as described in Section 19.2.

Rates for DS0, DS1, and DS3 Cross Connect arrangements listed in Section 7.11.5 and rates for Optical Facility Terminations listed in Section 19.2(E) will apply in addition to the other rates and charges as specified in Section 17.

© 2022 Frontier Communications Parent, Inc. All rights reserved.

ACCESS SERVICE

7. **Special Access Service** (Cont'd)

7.2 **Rate Categories, Applications and Regulations**

7.2.1 **Rate Categories**

(G) **DS1 Term Payment Plan (TPP)#** (T)

(1) Description

The DS1 Term Payment Plan (TPP) allows customers term discounts for DS1 circuit termination. A customer may select this service for either a single state or multi-state level. TPP is offered for a 1, 2, 3, or 5 year service commitment period for the DS1 circuit termination. All TPP DS1 circuit terminations will be billed the same rate, depending on the length of the term selected by the customer.

(2) Rate Changes

Decreases in the TPP monthly recurring circuit termination rates will be passed on to subscribers of the plan.

(3) Commitment Levels

To initiate a TPP, on either a single state or multi-state plan, the minimum commitment is as shown below.

Number of States	Minimum Number of Circuit Terminations
1	25
2	50
3	75
4	100
5 and over	125

The commitment levels will be met if the customer has the minimum number of DS1 TPP circuit terminations in the DS1 TPP. If the customer has committed to more than the minimum number of circuit terminations required, as shown above, an allowance of minus 2% or plus 5 % will be considered as having met the commitment level. (C)

Effective November 21, 2017, new subscriptions to DS1 Term Payment Plan are no longer permitted. DS1 TPP customers subscribed as of November 21, 2017 may continue with their existing subscriptions. If at any time an existing customer terminates its DS1 TPP, the customer may not re-subscribe to the plan.

© 2022 Frontier Communications Parent, Inc. All rights reserved.

ACCESS SERVICE

7. **Special Access Service** (Cont'd)

7.2 **Rate Categories, Applications and Regulations**

7.2.1 **Rate Categories**

(G) **DS1 Term Payment Plan (TPP)#**

(4) Changes to Commitment Levels

Written notice must be submitted by the customer to change the commitment level of DS1 circuit terminations. If, as the result of increasing or decreasing the commitment level, service is changed from a TPP to a DS1 standard arrangement, or from a standard arrangement to a TPP arrangement an ASR will be required within 30 days for all services changed. Only one TPP arrangement will be allowed per customer for each term period. Penalties for decreasing the commitment level are discussed in 7.2.1(G)(8).

(5) TPP Plan Enrollment

When the customer elects to enroll in a TPP they must specify, in writing, the enrollment date (which will be the (N) anniversary date) and the commitment level. The commitment level is chosen by the customer and may be less than all of the customer's DS1 circutit terminations. The specified enrollment date must be within 30 days of receipt. The customer must also select whether the TPP will be a single state or multi-state plan and specify the states to be included. By the specified date the customer must issue ASRs to add DS1 circuit terminations to the TPP and/or convert standard arrangement to the TPP to fall within the commitment range specified in 7.2.1(G)(3). The customer chooses which DS1 circuit terminations to include in the TPP.

Service Availability is limited. Refer to # footnote on page 7-29.

© 2022 Frontier Communications Parent, Inc. All rights reserved.

ACCESS SERVICE

7. **Special Access Service** (Cont'd)

7.2 **Rate Categories, Applications and Regulations**

7.2.1 **Rate Categories**

(G) **DS1 Term Payment Plan (TPP)#**

(6) Annual Review

Each customer's TPP will be reviewed annually. The customer will be notified in writing as to the status of the TPP. This notification will inform the customer of any TPP DS1 circuit terminations that must be converted. If the customer has increased the number of DS1 circuit terminations from the initial commitment beyond the range specified in 7.2.1(G)(3), he will have the option of increasing the commitment level for the remainder of the plan. If the customer chooses not to increase the commitment level of DS1 circuit terminations for the remaining year(s) of the plan, he must convert the increased number of DS1 circuit terminations to the standard payment plan. The DS1 circuit terminations that are converted to the standard payment plan will not be eligible for reconversion to the TPP for a ten month period. The customer may decrease the commitment level at the time of the annual review and pay the applicable penalties for the amount of DS1 circuit terminations being decreased. The customer will have 30 days from receipt of this notification to convert DS1 circuit terminations.

If the customer does not take action during the 30 day period, the commitment level will be automatically changed to the number of TPP DS1 circuit terminations in the TPP at the anniversary date. Penalties will apply as set forth in 7.2.1(G)(8).

Service Availability is limited. Refer to # footnote on page 7-29.

© 2022 Frontier Communications Parent, Inc. All rights reserved.

ACCESS SERVICE

7. Special Access Service (Cont'd)

7.2 Rate Categories, Applications and Regulations

7.2.1 Rate Categories

(G) **DS1 Term Payment Plan (TPP)#** (T)

(7) TPP Conditions

If a DS1 service has two DS1 circuit terminations, to include this service as part of a TPP, both DS1 circuit terminations must be in the TPP.

After enrolling in the plan, the customer may add or delete DS1 circuit terminations rated at the specified term period rate at any time during the plan. For example, if the customer agrees to a 2 year TPP, they may add DS1 circuit terminations at any time at the 2 year TPP rate.

Individual states can not be added or deleted during the plan period.

A customer may subscribe to only one plan for each term period within a given state.

(8) Penalties for Failing To Meet Commitment

When the number of TPP Services at the annual review is less than the acceptable commitment range, the following penalty charges will apply, based on the difference between the commitment level less 2% and the number of TPP services in effect at the annual review. For example, if the commitment level is 100 and the customer has 90 DS1 TPP circuit terminations in the TPP at time of annual review, the penalties described below will be applied to the difference of 98 (2% less than 100) and 90, which would be 8 in this example. (C)

(a) The penalties charged during the first year of the TPP will be the full MRC for 4 months plus 10% of the MRC for the remaining number of months.

(b) The penalties charged during the subsequent years of the TPP will be 10% of the MRC for 4 months plus 10% of the MRC for the remaining number of months.

Service Availability is limited. Refer to # footnote on page 7-29. (N)

© 2022 Frontier Communications Parent, Inc. All rights reserved.

ACCESS SERVICE

7. **Special Access Service** (Cont'd)

7.2 **Rate Categories, Applications and Regulations**

7.2.1 **Rate Categories**

(G) **DS1 Term Payment Plan (TPP)#**

(9) TPP Nonrecurring Charge

Customers subscribing to a TPP will be assessed a nonrecurring charge per circuit termination except in the following conditions:

- when converting standard arrangement circuit terminations to a TPP.

(10) Changes in Length of a TPP Period

Prior to the expiration of a TPP period, the customer may elect to convert to a new TPP period of the same or different length, subject to the following conditions:

- no credit will be given for the new payment period for payments made under the TPP arrangement
- NRCs will not be reapplied for existing service(s)
- if the new TPP period is shorter in length than the time remaining under the existing TPP, the change to the new TPP period constitutes a disconnect of the existing TPP service and termination liability charges will apply
- the rates for the new period will be the rates currently in effect at the time of the change.

Service Availability is limited. Refer to # footnote on page 7-29.

© 2022 Frontier Communications Parent, Inc. All rights reserved.

ACCESS SERVICE

7. **Special Access Service** (Cont'd)

7.2 **Rate Categories, Applications and Regulations**

7.2.1 **Rate Categories**

(G) **DS1 Term Payment Plan (TPP)#**

(11) Renewal Options

At the expiration of a TPP period, the customer may select a new TPP period or convert to a month to month payment plan. If the customer fails to make this selection, the Telephone Company will notify the customer and continue one additional month of TPP billing. If the customer does not select a new payment plan within 30 days from the expiration date, billing will automatically convert to the DS1 month to month payment plan.

At the expiration of the TPP period, if the customer renews at the DS1 quantity in service at the end of his previous TPP, or a greater quantity, and makes no change in the selected states, then any penalties that may need to be assessed at the first anniversary of the renewal period will be assessed as set forth in 7.2.1(G)(8)(b). The rates for the renewal period will be the rates in effect at the time of the renewal.

(12) Upgrade to Higher Speed Service

The customer may upgrade service to a higher speed during a TPP period. The upgraded service will be subject to all appropriate NRCs.

If both of the following conditions exist, the commitment level will be decreased by the number of TPP DS1 circuit terminations that are upgraded to a higher speed service.

- The customer must notify the Telephone Company in writing in addition to the ASR.
- The higher speed service period must be longer in length than the time remaining under the TPP.

Service Availability is limited. Refer to # footnote on page 7-29.

© 2022 Frontier Communications Parent, Inc. All rights reserved.

ACCESS SERVICE

7. **Special Access Service** (Cont'd)

7.2 **Rate Categories, Applications and Regulations**

7.2.1 **Rate Categories**

(H) **Optional Payment Plan (OPP) #**

(1) General

(a) The terms and conditions specified herein are applicable to Fractional T1 Service (FT1).

(b) Only the Circuit Termination rate element is available under an OPP. All other associated rate elements or additional features are available at the minimum month-to-month tariffed rates and regulations.

(c) FT1 Circuit Termination rates will not be greater than minimum month-to-month tariffed rates and regulations.

(d) Three year and five year OPP rates will be equal to or less than the one year OPP rates. Decreases to the one year OPP will flow through to the three year and five year OPP.

(e) Payment periods of one year, three year, and five year are available to all customers at the applicable rates set forth in 7.11.5(A) regardless of when they subscribe to an OPP arrangement.

(f) The customer must designate on the ASR the payment period for the OPP.

(g) Inside moves, provided in accordance with 7.2.1(D) (4), will not incur termination liability charges.

(h) Outside moves, provided in accordance with 7.2.1(D) (4) (B), will allow the customer to retain the same OPP payment period. Any other move will be treated as a disconnect of the service and termination liability charges will apply.

Effective November 21, 2017, new subscriptions to Optional Payment Plan are no longer permitted. OPP customers subscribed as of November 21, 2017 may continue with their existing subscriptions. If at any time an existing customer terminates its OPP, the customer may not re-subscribe to the plan.

© 2022 Frontier Communications Parent, Inc. All rights reserved.

ACCESS SERVICE

7. **Special Access Service** (Cont'd)

7.2 **Rate Categories, Applications and Regulations**

7.2.1 **Rate Categories**

(H) **Optional Payment Plan (OPP)#**

(2) Changes in Length of OPP Period

Prior to the completion of the selected OPP period, the customer may elect to convert to a new OPP period of the same or different length, subject to the following conditions:

- No credit toward the new payment period will be given for payments made under the OPP arrangement.
- Nonrecurring charges will not be reapplied for existing service(s).
- If the new OPP period is shorter in length than the time remaining under the existing OPP, the change to the new OPP period constitutes a new disconnect of the existing OPP service and termination liability charges apply.

Renewal Options

(3) At the expiration of an OPP period, the Telephone Company will automatically renew the service at the same OPP period unless the customer chooses to convert to a different OPP period, convert to month-to-month rates or

(a) discontinue service.

Conversion to a different OPP period will require the customer to submit a change order ASR. conversion to a different OPP period will be allowed without application of any nonrecurring or ordering charges.

(b)

Conversion to month-to-month rates will be treated as a disconnect of service and establishment of new service. If no other changes are ordered, no NRCs will apply.

(c)

Service Availability is limited. Refer to # footnote on page 7-35.

© 2022 Frontier Communications Parent, Inc. All rights reserved.

ACCESS SERVICE

7. **Special Access Service** (Cont'd)

7.2 **Rate Categories, Applications and Regulations**

7.2.1 **Rate Categories**

(H) **Optional Payment Plan (OPP)#**

(4) Notification of Discontinuance

An ASR for discontinuance of an OPP arrangement must be received by the Telephone Company at least thirty (30) business days prior to actual disconnect of service. Monthly charges will apply for a period of thirty (30) business days (C) from the date the Telephone Company received disconnect notification or until the requested disconnect date, if longer than thirty (30) business days. (C)

(5) Upgrade to Higher Speed Service

Customers may elect to upgrade service to a higher speed during an OPP period, subject to the following conditions:

- The upgraded service will be subject to all appropriate nonrecurring charges.
- Termination liability charges will not apply as long as the upgraded service remains connected at the same point of termination(s) or meets the requirements set forth in 7.2.1(D)(B)(2).
- If the upgrade involves establishing a multiplexing arrangement, termination liability charges will not apply if the hub wire center is the same one associated with the customer designated location.

Service Availability is limited. Refer to # footnote on page 7-35.

© 2024 Frontier Communications Parent, Inc. All rights reserved.

ACCESS SERVICE

7. **Special Access Service** (Cont'd)

7.2 **Rate Categories, Applications and Regulations**

7.2.1 **Rate Categories**

(H) **Optional Payment Plan (OPP)#**

(6) Termination Liability

When an OPP service is discontinued prior to the end of the period, termination liability charges, as set forth below, will apply based on the remainder of the OPP period in effect at the time of disconnect.

One Year OPP - 50% of any remaining portion of the first year's recurring charges.

Three Year OPP - 50% of any remaining portion of the first year's recurring charges. In addition, for any remaining portion of the second and third years, the customer will be liable for 10% of the total monthly recurring charges in that time period.

Five Year OPP - 50% of any remaining portion of the first year's recurring charges. In addition, for any remaining portion of the second through fifth years, the customer will be liable for 20% of the total monthly recurring charges in that time period.

(7) Termination Without Liability

Reserved for Future Use (C)

A customer may change the number of channels of an N x 56 Kbps or N x 64 Kbps service to another higher value of N (where N = 2, 4, or 6), subject to the following rate applications:

- The changes service will be subject to all appropriate nonrecurring charges.
- Termination liability charges will no apply as long as the changed service remains connected at the same point of termination(s) or meets the requirements of 7.2.1(D)(4)(B)(2).
- If the change involves establishing a multiplexing arrangement, termination liability charges will not apply if the hub wire center is the same one associated with the customer designated location.

Service Availability is limited. Refer to # footnote on page 7-35.

© 2024 Frontier Communications Parent, Inc. All rights reserved.

ACCESS SERVICE

7. Special Access Service (Cont'd)

7.2 Rate Categories, Applications, and Regulations (Cont'd)

7.2.2 Minimum Periods

The minimum service period for all services except part-time and occasional Program Audio services and High Capacity DS3 services is one month. The minimum service period for part-time Program Audio Services is one day even though the service will be provided only for the duration of the event specified on the order (e.g., one-half hour, two hours, five hours, etc.). The minimum period for High Capacity DS3 Service is that period requested by the customer as set forth in Section 7.2.6 (B) following. The minimum period for a Month to Month Rated DS3 is 12 months. (C)

7.2.3 Application of Daily and Monthly Rates

(A) Daily Rates

Daily rates are recurring rates that apply to each 24 hour period or fraction thereof that a Program Audio Special Access Service is provided for part-time or occasional use. For purposes of applying daily rates, the 24 hour period is not limited to a calendar day.

Part-time Program Audio Service ordered on one Access Service Request and provided within a consecutive 30 day period will be charged the daily rate, not to exceed an amount equal to the monthly rate. For each subsequent day or part day, a charge equal to 1/30th of the monthly rate shall apply.

(B) Monthly Rates

Monthly rates are flat recurring rates that apply each month or fraction thereof that a Special Access Service is provided. For billing purposes, each month is considered to have 30 days.

© 2022 Frontier Communications Parent, Inc. All rights reserved.

ACCESS SERVICE

7. **Special Access Service** (Cont'd)

7.2 **Rate Categories, Applications, and Regulations** (Cont'd)

7.2.4 **Facility Hubs and Multiplexing**

A customer has the option of ordering Voice Grade facilities or High Capacity facilities (i.e., Group, Supergroup, Mastergroup, DS1, DS1C, DS2, DS3 or DS4) to a facility hub for multiplexing to individual services of a lower capacity or bandwidth (e.g., Telegraph, Voice, Program Audio, etc.). Additionally, the customer may specify optional features for the individual circuits derived from the facility to further tailor the circuit to meet specific communications requirements.

Some of the types of multiplexing available include the following:

- from higher to lower bit rate
- from higher to lower bandwidth
- from digital to voice frequency circuits

A hub is a Telephone Company designated wire center at which multiplexing functions are performed.

Different locations may be designated as hubs for different facility capacities, e.g., multiplexing from digital to digital may occur at one location while multiplexing from digital to analog may occur at a different location. When placing an Access Service Request the customer will specify the desired hub. The National Exchange Carrier Association Tariff FCC No. 4 identifies serving wire centers, hub locations and the type of multiplexing functions available.

© 2022 Frontier Communications Parent, Inc. All rights reserved.

ACCESS SERVICE

7. **Special Access Service** (Cont'd)

7.2 **Rate Categories, Applications, and Regulations** (Cont'd)

7.2.4 **Facility Hubs and Multiplexing** (Cont'd)

Point to point services may be provided on circuits of these facilities to a hub. The transmission performance for the point to point service provided between the customer designated premises will be that of the lower capacity or bit rate.

The Telephone Company will commence billing the monthly rate for the facility to the hub on the date specified by the customer on the Access Service Request. The customer will be billed for a High Capacity or Voice Grade Circuit Termination, Circuit Mileage, Special Access Cross Connect and the multiplexer for the service at the time the facility is installed. Individual services utilizing these facilities may be installed coincident with the installation of the facility to the hub or may be ordered and/or installed at a later date, at the option of the customer. Individual service rates (by service type) will apply for a Circuit Termination and additional Circuit Mileage (as required) for each channelized service. These will be billed to the customer as each individual service is installed.

Cascading multiplexing occurs when a high capacity circuit is de-multiplexed to provide circuits with a lesser capacity and one of the lesser capacity circuits is further demultiplexed. When cascading multiplexing is performed, whether in the same or a different hub, a charge for the additional multiplexing unit also applies. When cascading multiplexing is performed at different hubbing locations, Circuit Mileage charges also apply between the hubs.

Although not requiring multiplexing, the Telephone Company will designate certain hubs for Program Audio Services. Full-time service will be provided between a customer designated premises and a hub and billed accordingly at the monthly rates set forth in 7.6.5 and 7.7.4 for a Circuit Termination, and Circuit Mileage and Optional Features and Functions as applicable. The customer may order part-time and occasional Program Audio as needed between the hub and a second customer designated premises. The rate elements required to provide the part-time or occasional service (i.e., Circuit Termination, and Circuit Mileage and Optional Features as applicable) will be billed at daily rates for the duration of the service requested.

© 2022 Frontier Communications Parent, Inc. All rights reserved.

ACCESS SERVICE

7. **Special Access Service** (Cont'd)

7.2 **Rate Categories, Applications, and Regulations** (Cont'd)

7.2.5 **Shared Use Analog and Digital High Capacity Services**

Shared Use refers to a rate application applicable only when the customer orders High Capacity Special Access facilities between a customer designated premises and a Telephone Company hub where the Telephone Company performs multiplexing/de-multiplexing functions and the same customer then orders the derived channels as Special and Switched Access Services. If the customer has Switched Access Service between a customer designated premises and an end office that is multiplexed at a Telephone Company hub and subsequently orders the derived channels as Special and Switched Access Service, rates and charges will apply as if the service were ordered as shared use. (T)

Shared use of Special Access Cross Connect and Expanded Interconnection service are not available.

Except as noted above, the High Capacity facility will be ordered, provided and rated as Special Access Service (i.e., Channel Termination, Channel Mileage, as appropriate, and Multiplexing Arrangement). The nonrecurring charge that applies when the shared use facility is installed will be the nonrecurring charge associated with the appropriate Special Access High Capacity Channel Termination. Rating as Special Access will continue until such time as the customer chooses to use a portion of the available capacity for Switched Access Service. Individual service (i.e., Switched or Special Access) nonrecurring charges will not apply to the individual channels of the shared use facility.

When Special Access Service is provided utilizing a channel of the shared use facility to a hub, High Capacity rates and charges will apply for the facility to the hub, as set forth preceding, and individual service rates and charges will apply from the hub to the customer designated premises. The rates and charges that will apply to the portion from the hub to the customer designated premises will be dependent on the specific type of Special Access Service that is provided. The applicable rates and charges will include a Channel Termination and Channel Mileage, if applicable. Rates and charges for optional features and functions associated with the service, if any, will apply for the appropriate channel type

As each individual channel is activated for Switched Access Service, the High Capacity Special Access Channel Termination, Channel Mileage, and Multiplexing rates will be reduced accordingly (e.g., 1/24th for a DS1 service, etc.). Switched Access Service rates and charges, as set forth in Section 20 following, will apply for each channel that is used to provide a Switched Access Service. Additionally, the Switched Access Service Entrance Facility, Direct Trunked Transport, and Multiplexing charges, if applicable, will be reduced by multiplying their respective rates by the ratio of derived Switched Access Service channels to the total number of Voice Grade channels that can be derived.

The customer must place an order for each individual Switched or Special Access Services utilizing the Shared Use Facilities and specify the channel assignment for each such service. (T)

* Shared Use Analog and Digital High Capacity Services, are not available for arrangements between service areas listed under 7.1.10.

© 2022 Frontier Communications Parent, Inc. All rights reserved.

ACCESS SERVICE

7. **Special Access Service** (Cont'd)

7.2 **Rate Categories, Applications, and Regulations** (Cont'd)

7.2.6 **DS3 High Capacity***

(A) A DS3 (44.736Mbps) High Capacity Circuit Termination may be ordered as an Individual, 3-System or 12-System. A Circuit Termination may be ordered with an electrical or optical interface.

DS3 Circuit Terminations are non-distance sensitive and are provided on a protected basis.

Individual System

An Individual System is a single DS3 between a CDL and the serving wire center. The appropriate NRC is applied per Circuit Termination.

Circuit Mileage rate elements are applied per Circuit Termination when mileage between offices is required. In instances when a Circuit Termination is ordered to a second CDL in conjunction with an Individual System Circuit Termination and Circuit Mileage between offices is required Circuit Mileage rate elements are applied per circuit.

3-System#

The 3-System allows the same customer, between the same CDL and the serving wire center, to order additional DS3 Circuit Terminations, up to a maximum of two. Additional Circuit Terminations may only be added with the same interface, electrical or optical, as the First System. The appropriate NRC is applied per Circuit Termination.

Circuit Mileage rate elements are applied per Circuit Termination when mileage between offices is required. In instances when a Circuit Termination is ordered to a second CDL in conjunction with a 3-System Circuit Termination and Circuit Mileage between offices is required Circuit Mileage rate elements are applied per circuit.

Effective November 21, 2017, new subscriptions to DS3 3-System and DS3 12-System are no longer permitted. DS3 3-System and DS3 12-System customers subscribed as of November 21, 2017 may continue with their existing subscriptions. If at any time an existing customer terminates its DS3 3-System and DS3 12-System, the customer may not re-subscribe to the plan.

* DS3 High Capacity service may be provided between service areas shown under 7.1.10, where facilities and conditions permit.

© 2022 Frontier Communications Parent, Inc. All rights reserved.

ACCESS SERVICE

7. **Special Access Service** (Cont'd)

7.2 **Rate Categories, Applications, and Regulations** (Cont'd)

7.2.6 **DS3 High Capacity** (Cont'd)

(A) 12-System#

The 12-System allows the same customer, between the same CDL and the serving wire center, to order additional DS3 Circuit Terminations, with a maximum of eleven. Additional Circuit Terminations may only be added with the same interface, electrical or optical, as the First System. The appropriate NRC is applied per Circuit Termination.

Circuit Mileage rate elements are applied per Circuit Termination when mileage between offices is required. In instances when a Circuit Termination is ordered to a second CDL in conjunction with a 12-System Circuit Termination and Circuit Mileage between offices is required Circuit Mileage rate elements are applied per circuit in accordance with Section 7.2.1(B).

(B) DS3 Service Periods #

DS3 service is offered under four service periods, each with different rate levels. The service periods are 1, 3, 5 and 7 years. The customer must specify the service period at the time the service is ordered. Each DS3 service within a three/twelve capacity system can have a different service period. Each DS3 Circuit Termination of a two-point DS3 service must have the same service period.

(C)

Expiration of Service Periods ##

(C)

At the expiration of a service period, the service will convert to the Individual DS3 – Non-Capacity System Month to Month Rate.

Service Availability is limited. Refer to # footnote on page 7-43.

Effective November 19, 2021, DS3 Service Periods are no longer permitted. DS3 Service Periods in effect as of November 19, 2021 may continue the existing term but will not be eligible to extend, renew, reenroll in, convert to a new service period, or in any other way continue their existing plan beyond its current expiration. At expiration of the DS3 Service Period, service will be converted to the Month to Month Rate. If at any time an existing customer terminates its DS3 Service Period, the customer may not re-subscribe to the rate.

Effective July 26, 2022 Any DS3 Service billing at the Month to Month rate will convert to the Individual DS3 - Non-Capacity System Month to Month rate. In addition, at the expiration of a service period, the DS3 service will convert to the Individual DS3 - Non Capacity System Month to Month rate. (N)

© 2022 Frontier Communications Parent, Inc. All rights reserved.

ACCESS SERVICE

7. **Special Access Service** (Cont'd)

7.2 **Rate Categories, Applications, and Regulations** (Cont'd)

7.2.6 **DS3 High Capacity** (Cont'd)

(D) Reserved for Future Use (C)

Discontinuance With Liability - DS3 Service Period

(E) When a DS3 service is discontinued prior to the end of the service period, the customer will be liable for a percentage of the total monthly charges for the remaining portion of the service period. This charge will be based on the rates in effect at the time of disconnect. The customer's total liability is dependant upon the number of months remaining within the year that the service is discontinued times the liability rate for that year plus the total monthly charges for each annual period remaining in the service period times the applicable liability rate. The liability rates for each year of the service period are as follows:

Year In Which Service Is Discontinued	Liability Rate
1	45%
2	30%
3	25%
4	20%
5	15%
6	10%
7	5%

For example, if a customer with a seven year service period discontinues DS3 service after six months within the 4th year, the customer will be liable for 20% of the total monthly charges for six months, 15% of the total monthly charges for the 5th year, 10% of the total monthly charges for the 6th year and 5% of the total monthly charges for the 7th year.

© 2024 Frontier Communications Parent, Inc. All rights reserved.

ACCESS SERVICE

7. **Special Access Service** (Cont'd)

7.2 **Rate Categories, Applications, and Regulations** (Cont'd)

7.2.6 **DS3 High Capacity** (Cont'd)

(F) Notification of Discontinuance

Notice of discontinuance must be given by the customer at least thirty (30) business days prior to actual discontinuance. Monthly charges will apply for a period of thirty (30) business days from the date the Telephone Company receives discontinuance notification or until the requested discontinuance date, if longer than thirty (30) business days. (C) | (C)

(G) Upgrade to a Larger Capacity System

At the customer's option, upgrades from a smaller capacity system to a larger capacity system will be allowed. All appropriate NRCs for the larger capacity system will apply. Credit will not be given for any number of months the system was maintained. The larger capacity system requires the Individual DS3 – Non-Capacity System Month to Month rate and a new minimum period as described in 7.2.2.

© 2024 Frontier Communications Parent, Inc. All rights reserved.

ACCESS SERVICE

7. **Special Access Service** (Cont'd)

7.2 **Rate Categories, Applications, and Regulations** (Cont'd)

7.2.6 **DS3 High Capacity** (Cont'd)

(H) Downgrade to a Smaller Capacity System

Downgrades from a larger capacity system to a smaller capacity system will not be allowed without the full assessment of the liabilities described in (E) preceding for the larger system, plus the full application of all charges for the smaller system. Credit will not be given for any number of months the system was maintained. The smaller capacity system requires the Individual DS3 – Non-Capacity System Month to (C)
Month Rate and a new minimum period as described in 7.2.2. (C)

(I) Service Disconnect

When a customer requests the disconnect of a DS3 service in the three/twelve capacity system, the disconnect steps are applied on a last in, first out basis. When only the First DS3 service exists on a three/twelve capacity system, that service will be disconnected.

(J) Conversion to Tariff - ICB DS3 Service

All Individual Case Basis (ICB) DS3 service arrangements will be converted to general tariff rates no later than one year from the effective date of this filing.

When an ICB DS3 customer paid a higher Nonrecurring Charge (NRC) for installation and a lower Monthly Recurring Charge (MRC) for DS3 service than is applicable under the general DS3 tariff offering, a credit will be made to the customer's account, less any benefit received for the lower MRC, for the excess amount. The credit will be calculated and the customer will be informed of the amount within 30 days after the customer either converts to general DS3 tariff service or terminates the ICB DS3 service. The credit amount will be applied to the customer's bill as a lump sum. The credit amount will be calculated as follows:

NRC Credit = (ICB NRC) - (Effective Tariff NRC) - (MRC Benefit)

© 2022 Frontier Communications Parent, Inc. All rights reserved.

ACCESS SERVICE

7. **Special Access Service** (Cont'd)

7.2 **Rate Categories, Applications, and Regulations** (Cont'd)

7.2.6 **DS3 High Capacity** (Cont'd)

(J) Conversion to Tariff - ICB DS3 Service (Cont'd)

The MRC benefit is equal to the present worth of the difference between the current MRC and the ICB MRC, discounted at one percent per month in service. In no event will the MRC benefit be less than zero. This calculation is shown below:

$$\text{MRC Benefit} = (\text{Current MRC} - \text{ICB MRC}) \times \frac{(1+i)^n - 1}{i \times (1+i)^n}$$

n = Number of months in service
i = Monthly interest rate expressed as a decimal (.01)

For purposes of determining the current general DS3 NRC amount, the ICB service will be matched to the general DS3 offering based on capacity size (1, 3 or 12), and the rate plan term (1, 3, 5 or 7) closest to the ICB's Maximum Termination Liability (MTL) period. For example, if an ICB DS3 was provided at the customer's request on a three capacity DS3 system with a ten year MTL, then the ICB NRC would be compared to the current rate for a three capacity system with a seven year rate plan.

© 2022 Frontier Communications Parent, Inc. All rights reserved.

ACCESS SERVICE

7. **Special Access Service** (Cont'd)

7.2 **Rate Categories, Applications, and Regulations** (Cont'd)

7.2.7 Reserved

© 2022 Frontier Communications Parent, Inc. All rights reserved.

ACCESS SERVICE

7. Special Access Service (Cont'd)

7.3 Metallic Service

7.3.1 Basic Circuit Description

A Metallic circuit is an unconditioned two-wire circuit capable of transmitting low speed varying signals at rates up to 30 baud. Metallic circuits are provided between customer designated premises or between a customer designated premises and a Telephone Company hub where bridging functions are performed. Interoffice metallic facilities will be limited in length to a total of five miles per circuit.

7.3.2 Technical Specifications Packages

	Package MT-			
Parameter	C	1	2	3
DC Resistance				
Between Conductors	X	X	X	
Loop Resistance	X			X
Shunt Capacitance	X			X

The technical specifications are delineated in Technical Publication TR-NPL-000336.

7.3.3 Channel Interfaces

Compatible channel interfaces are set forth in 9. following.

7.3.4 Optional Features and Functions

(1) Central Office Bridging Capability

(a) Three Premises Bridging - Provision of tip-to-tip and ring-to-ring connection in a central office of a metallic pair to a third customer premises.

(b) Series Bridging of up to 26 customer premises.

The following table shows the technical specifications packages with which the optional features and functions are available.

	Available with Technical Specifications Package MT-			
	C	1	2	3
Three Premises Bridging	X	X		X
Series Bridging	X		X	

© 2022 Frontier Communications Parent, Inc. All rights reserved.

ACCESS SERVICE

7. **Special Access Service** (Cont'd)

7.3 **Metallic Services** (Cont'd)

7.3.5 **Rates and Charges**

(A) Circuit Termination—Competitive Counties
- Per Point of Termination
-

Jurisdiction	Monthly Rates	Nonrecurring Charges
Arizona - Western	$13.02	$200.00
California	24.00	200.00
Illinois	16.00	200.00
Indiana	27.60	200.00
Nevada	27.50	200.00
N Carolina	23.00	200.00

(D)

© 2022 Frontier Communications Parent, Inc. All rights reserved.

ACCESS SERVICE

7. **Special Access Service** (Cont'd)

7.3 **Metallic Service** (Cont'd)

7.3.5 **Rates and Charges** (Cont'd)

(B) Circuit Mileage

Jurisdiction	Monthly Rates Fixed	Monthly Rates Per Mile
Arizona - Western	$14.35	$0.71
California	17.34	1.10
Illinois	12.30	1.05
Indiana	14.67	2.03
Nevada	13.50	1.82
N Carolina	11.01	1.02

(D)

© 2022 Frontier Communications Parent, Inc. All rights reserved.

ACCESS SERVICE

7. **Special Access Service** (Cont'd)

7.3 **Metallic Services** (Cont'd)

7.3.5 **Rates and Charges** (Cont'd)

(C) Optional Features and Functions

(1) Bridging
- Per Port

Jurisdiction	Three Premises Bridging Monthly Rate	Series Bridging Monthly Rate
Rates listed here apply to all jurisdictions of the Issuing Carriers listed on Title Pages 2.	$8.00	$8.00

© 2022 Frontier Communications Parent, Inc. All rights reserved.

ACCESS SERVICE

7. Special Access Service (Cont'd)

7.4 Telegraph Grade Service

7.4.1 Basic Service Description

A Telegraph Grade circuit is an unconditioned circuit capable of transmitting binary signals at rates of 0-75 baud or 0-150 baud. This circuit is furnished for half-duplex or duplex operation. Telegraph Grade circuits are provided between customer designated premises or between a customer designated premises and a Telephone Company hub.

7.4.2 Technical Specifications Packages

Parameter	Package TG-		
	C	1	2
Telegraph Distortion	X	X	X

The technical specifications are delineated in Technical Reference TR-NPL-000336.

7.4.3 Channel Interfaces

Compatible channel interfaces are set forth in 9. following.

7.4.4 Optional Features and Functions

(1) Telegraph Bridging (two-wire and four-wire)

The following table shows the technical specifications packages with which the optional features and functions are available.

	Available with Technical Specifications Package TG-		
	C	1	2
Telegraph Bridging	X	X	X

© 2022 Frontier Communications Parent, Inc. All rights reserved.

ACCESS SERVICE

7. **Special Access Service** (Cont'd)

7.4 **Telegraph Grade Service** (Cont'd)

7.4.5 **Rates and Charges**

(A) Circuit Termination
- Per Point of Termination—Competitive Counties

Jurisdiction	2-Wire Monthly Rates	2-Wire Nonrecurring Charges
Arizona - Western	$13.02	$200.00
California	24.00	200.00
Illinois	16.00	200.00
Indiana	27.60	200.00
Nevada	27.50	200.00
N Carolina	23.00	200.00

(D)

© 2022 Frontier Communications Parent, Inc. All rights reserved.

ACCESS SERVICE

7. **Special Access Service** (Cont'd)

7.4 **Telegraph Grade Service** (Cont'd)

7.4.5 **Rates and Charges** (Cont'd)

(A) Circuit Termination (Cont'd)
- Per Point of Termination—Competitive Counties

Jurisdiction	4-Wire Monthly Rates	4-Wire Nonrecurring Charges
Arizona - Western	$16.25	$200.00
California	31.35	200.00
Illinois	21.00	200.00
Indiana	44.83	200.00
Nevada	44.20	200.00
N Carolina	28.45	200.00

(D)

© 2022 Frontier Communications Parent, Inc. All rights reserved.

ACCESS SERVICE

7. **Special Access Service** (Cont'd)

7.4 **Telegraph Grade Service** (Cont'd)

7.4.5 **Rates and Charges** (Cont'd)

(B) Circuit Mileage
- Per Point of Termination

Jurisdiction	Monthly Rates -Fixed	Monthly Rates - Per Mile
Arizona - Western	$14.35	$0.71
California	17.34	1.10
Illinois	12.30	1.05
Indiana	14.67	2.03
Nevada	13.50	1.82
N Carolina	11.01	1.02

(D)

© 2022 Frontier Communications Parent, Inc. All rights reserved.

ACCESS SERVICE

7. **Special Access Service** (Cont'd)

7.4 **Telegraph Service** (Cont'd)

7.4.5 **Rates and Charges** (Cont'd)

(C) Optional Features and Functions

(1) Telegraph Bridging
- Per Port

Jurisdiction	2-Wire Bridging Monthly Rate	4-Wire Bridging Monthly Rate
Rates listed here apply to all jurisdictions of the Issuing Carriers listed on Title Pages 2.	$8.00	$8.00

© 2022 Frontier Communications Parent, Inc. All rights reserved.

ACCESS SERVICE

7. **Special Access Service** (Cont'd)

7.5 **Voice Grade Service**

7.5.1 **Basic Circuit Description**

A Voice Grade Circuit is a circuit which provides voice frequency transmission capability in the nominal frequency range of 300 to 3000 Hz and may be terminated two-wire or four-wire. Effective 2-wire and 4-wire circuits are available as an Optional Feature and Function. Voice Grade circuits are provided between customer designated premises or between a customer designated premises and a Telephone Company hub.

Voice Grade Service may be ordered in conjunction with Switched Access services as set forth in Section 6.3.2 preceding to provide access for a customer's communications service (e.g., WATS, 800, 888, or WATS-type service). When the customer orders the Switched Access Interface Arrangement, Voice Grade Circuits provide voice frequency transmission capability between an end user premises and a WATS Serving Office (WSO). All applicable Special Access rates and charges apply (including Optional Features and Functions charges). Technical Specifications and Optional Features and Functions available with this arrangement are indicated under Package VG-SI in 7.5.5 following.

© 2022 Frontier Communications Parent, Inc. All rights reserved.

ACCESS SERVICE

7. **Special Access Service** (Cont'd)

7.5 **Voice Grade Service** (Cont'd)

7.5.2 **Technical Specifications Packages**

	Package VG-													
Parameter	C*	1	2	3	4	5	6	7	8	9	10	11	12	SI
Attenuation Distortion	X	X	X	X	X	X	X	X	X	X	X	X	X	X
C-Message Noise	X	X	X	X	X	X	X	X	X	X	X	X	X	X
Echo Control	X	X	X	X		X		X	X		X	X	X	X
Envelope Delay Distortion	X					X	X	X	X	X	X	X	X	X
Frequency Shift	X					X	X	X	X	X	X	X	X	X
Impulse Noise	X				X	X	X	X	X	X	X	X	X	X
Intermodulation Distortion	X					X	X	X	X	X	X	X	X	X
Loss Deviation	X	X	X	X	X	X	X	X	X	X	X	X	X	X
Phase Hits, Gain Hits, and Dropouts	X													
Phase Jitter	X					X	X	X	X	X	X	X	X	X
Return Loss														X
Signal-to-C Message Noise					X									
Signal-to-C Notch Noise	X				X	X	X	X	X	X	X	X	X	X

The technical specifications for these parameters (except for dropouts, gain hits, and phase hits) are delineated in Technical Reference TR-NWT-000335, Issue 3, and associated Addendum. The technical specifications for dropouts, phase hits, and gain hits are delineated in Technical Reference PUB 41004, Table 4.

* The desired parameters are selected by the customer from the list of available parameters.

© 2022 Frontier Communications Parent, Inc. All rights reserved.

ACCESS SERVICE

7. **Special Access Service** (Cont'd)

7.5 **Voice Grade Service** (Cont'd)

7.5.3 **Channel Interfaces**

The following channel interfaces for Voice Grade service do not require signaling capability: AH, DA, DB, DD, DE DS, NO, PR and TF.

The following channel interfaces for Voice Grade service require signaling capability: AB, AC, CT, DX, DY, EA, EB, EC, EX, GO, GS, LA, LB, LC, LO, LR, LS, RV, and SF.

Compatible channel interfaces are set forth in 9. following.

7.5.4 **Optional Features and Functions**

(1) Central Office Bridging Capability

(a) Voice Bridging (two-wire or four-wire)

(b) Data Bridging (two-wire or four-wire)

(c) Telephoto Bridging (two-wire and four-wire)

(d) Dataphone Select-A-Station Bridging with sequential arrangement ports or addressable arrangement ports

(e) Telemetry and Alarm Bridging, Split Band-Active Bridging, Passive Bridging, Summation-Active Bridging

(2) Central Office Multiplexing

Voice to Telegraph Grade: An arrangement that converts a Voice Grade circuit to Telegraph Grade circuits using frequency division multiplexing.

(3) Conditioning

Conditioning provides more specific transmission characteristics for Voice Grade services. C-Type conditioning controls attenuation distortion and envelope delay distortion. Sealing Current helps maintain continuity on dry metallic loops.

For two-point services, the parameters apply to each service. For multipoint services, the parameters apply to each mid link or end link. C-Type conditioning and Data Capability may be combined on the same service.

© 2022 Frontier Communications Parent, Inc. All rights reserved.

ACCESS SERVICE

7. **Special Access Service** (Cont'd)

7.5 **Voice Grade Service** (Cont'd)

7.5.4 **Optional Features and Functions** (Cont'd)

(3) Conditioning (Cont'd)

(a) C-Type Conditioning

C-Type Conditioning is provided for the additional control of attenuation distortion and envelope delay distortion on data services. The attenuation distortion and envelope delay distortion specifications for C-Type Conditioning are delineated in Technical Reference TR-NWT-000335, Issue 3.

(b) Improved C-Type Conditioning

Improved C-Type Conditioning options are provided in conjunction with C-Type Conditioning at the rates set forth in Section 7.5.5 following. The C-Type Conditioning rate shall apply only once regardless if one or both of the following Improved Options are ordered.

(i) Improved Attenuation Distortion

Improved Attenuation Distortion upgrades the frequency versus loss limits of the channel. The technical specifications for Improved Attenuation Distortion are delineated in Technical Reference TR-NWT-000335, Issue 3. This option is provided in conjunction with C-Type conditioning.

(ii) Improved Envelope Delay Distortion

Improved Envelope Delay Distortion upgrades the frequency versus delay response limits of the channel. The technical specifications for Improved Envelope Delay Distortion are delineated in Technical Reference TR-NWT-000335, Issue 3. This option is provided in conjunction with C-Type conditioning.

(c) Sealing Current

Sealing Current Conditioning is provided to help maintain continuity on dry metallic loops. It is usually associated with four-wire DA or NO type channel interfaces.

© 2022 Frontier Communications Parent, Inc. All rights reserved.

ACCESS SERVICE

7. **Special Access Service** (Cont'd)

7.5 **Voice Grade Service** (Cont'd)

7.5.4 **Optional Features and Functions** (Cont'd)

(4) Customer Specified Premises Receive Level

This option allows the customer to specify the receive level at the Point of Termination. This level must be within a specific range on effective four-wire transmission. The ranges are delineated in Technical Reference TR-NWT-000335, Issue 3.

(5) Improved Return Loss

(a) On Effective Four-Wire Transmission at Four-Wire Point of Termination (applicable to each two-wire port): Provides for a fixed 600 ohm impedance, variable level range and simplex reversal. Telephone Company equipment is required at the customer's premises where this option is ordered. The Improved Return Loss parameters are delineated in Technical Reference TR-NWT-000335, Issue 3.

(b) On Effective Four-Wire Transmission at Two-Wire Point of Termination: Provides for more stringent Echo Control specifications. In order for this option to be applicable, the transmission path must be four-wire at one POT and two-wire at the other POT. Placement of Telephone Company equipment may be required at the customer's premises with the two-wire POT. The Improved Return Loss parameters are delineated in Technical Reference TR-NWT-000335, Issue 3.

© 2022 Frontier Communications Parent, Inc. All rights reserved.

ACCESS SERVICE

7. **Special Access Service** (Cont'd)

7.5 **Voice Grade Service** (Cont'd)

7.5.4 **Optional Features and Functions** (Cont'd)

(6) Data Capability

Data Capability provides transmission characteristics suitable for data communications. Specifically, Data Capability provides for the control of Signal to C-Notched Noise Ratio and intermodulation distortion. It is available for two-point services or multipoint services.

The Signal to C-Notched Noise Ratio and intermodulation distortion parameter for Data Capability are:

- Signal to C-Notched Noise Ratio is greater than or equal to 32dB Intermodulation distortion
- Signal to second order modulation products (R2) is greater than or equal to 38dB
- Signal to third order modulation products (R3) is greater than or equal to 42 dB

When a service equipped with Data Capability is used for voice communications, the quality of the voice transmission may not be satisfactory.

(7) Telephoto Capability

Telephoto Capability provides transmission characteristics suitable for telephotographic communications. Specifically, Telephoto Capability is provided for the control of attenuation distortion and envelope delay distortion of telephotographic services. The attenuation distortion and envelope delay distortion parameters for Telephoto Capability are:

Attenuation Distortion
(1004Hz Reference)

Frequency Range (Hz)	Variation (dB)
500-3000	-0.5 to +1.5
300-3200	-1.0 to +2.5

Envelope Delay Distortion

Frequency Range (Hz)	Variation (mcs)
1000-2600	110
800-2800	180

© 2022 Frontier Communications Parent, Inc. All rights reserved.

ACCESS SERVICE

7. **Special Access Service** (Cont'd)

7.5 **Voice Grade Service** (Cont'd)

7.5.4 **Optional Features and Functions** (Cont'd)

(8) Signaling Capability

Signaling Capability provides for the ability to transmit signals from one customer premises to another customer premises on the same service.

(9) Selective Signaling Arrangement

An arrangement that permits code selective ringing for up to ten codes on a multipoint service.

(10) Transfer Arrangement

An arrangement that affords the customer an additional measure of flexibility in the use of their access circuits. The arrangement can be utilized to transfer a leg of a Special Access Service to another circuit that terminates in either the same or a different customer premises. A key activated or dial-up control service is required to operate the transfer arrangement. A spare circuit, if required, is not included as part of the option.

(11) Four-Wire/Two-Wire Conversions

The term "Effective 2-Wire" denotes a condition which permits the simultaneous transmission in both directions over a channel, but it is not possible to insure independent information transmission in both directions. Effective 2-wire channels may be terminated with 2-wire or 4-wire interfaces.

The term "Effective 4-Wire" denotes a condition which permits the simultaneous independent transmission of information in both directions over a channel. The method of implementing effective 4-wire transmission is at the discretion of the Telephone Company (physical, time domain, frequency-domain separation or echo cancellation techniques). Effective 4-wire channels may be terminated with a 2-wire interface at the customer's premises. However, when terminated 2-wire, simultaneous independent transmission cannot be supported because the two wire interface combines the transmission paths into a single path.

When a customer requests that an effective four-wire circuit be terminated with a two-wire circuit interface at the customer designated premises, a four-wire to two-wire conversion is required. The customer will be charged the 4-wire Circuit Termination rate when an effective four-wire is specified in the customer's order. The rate for the conversion is included as part of the basic Circuit Termination rate.

© 2022 Frontier Communications Parent, Inc. All rights reserved.

ACCESS SERVICE

7. **Special Access Service** (Cont'd)

7.5 **Voice Grade Service** (Cont'd)

7.5.4 **Optional Features and Functions** (Cont'd)

The following table shows the technical specifications packages with which the optional features and functions are available.

	Available with Technical Specifications Package VG-													
	C*	1	2	3	4	5	6	7	8	9	10	11	12	SI
C-Type Conditioning	X						X	X	X	X	X	X		
Central Office Bridging Capability	X		X			X	X				X	X	X	
Central Office Multiplexing	X						X							
Customer Specified Premises Receive Level	X		X	X				X	X	X				
Data Capability	X						X	X			X			
Improved Return Loss -For Effective Four-Wire Transmission	X	X	X	X	X	X	X	X	X	X	X	X	X	X
-For Effective Two-Wire Transmission	X		X	X				X						X
Sealing Current Conditioning	X						X							
Selective Signaling Arrangement	X		X			X	X				X	X	X	
Signaling Capability	X	X	X	X				X	X	X				#
Transfer Arrangement	X	X	X	X	X	X	X	X	X	X	X	X	X	

(#) Signaling is provided in conjunction with Switched Access as set forth in 6.3.2(T) preceding.

© 2022 Frontier Communications Parent, Inc. All rights reserved.

ACCESS SERVICE

7. **Special Access Service** (Cont'd)

7.5 **Voice Grade Service** (Cont'd)

7.5.5 **Rates and Charges**

(A) Circuit Termination
- Per Point of Termination –
  End User - Competitive Counties
  IC CDL – All Counties

Jurisdiction	2-Wire Monthly Rates	2-Wire Nonrecurring Charges	
Arizona – Western	$205.07	$3,150.28	(C)
California	378.03	3,150.28	
Illinois	252.00	3,150.28	
Indiana	434.74	3,150.28	
Nevada	433.16	3,150.28	
N Carolina	362.30	3,150.28	(C)

© 2024 Frontier Communications Parent, Inc. All rights reserved.

ACCESS SERVICE

7. **Special Access Service** (Cont'd)

7.5 **Voice Grade Service** (Cont'd)

7.5.5 **Rates and Charges** (Cont'd)

(A) Circuit Termination (Cont'd)
- - Per Point of Termination –
End User - Competitive Counties
IC CDL –All Counties

Jurisdiction	4-Wire Monthly Rates	4-Wire Nonrecurring Charges	
Arizona - Western	$255.96	$3,150.28	(C)
California	548.94	3,150.28	
Illinois	357.56	3,150.28	
Indiana	767.87	3,150.28	
Nevada	696.21	3,150.28	
N Carolina	484.34	3,150.28	(C)

© 2024 Frontier Communications Parent, Inc. All rights reserved.

ACCESS SERVICE

7. **Special Access Service** (Cont'd)

7.5 **Voice Grade Service** (Cont'd)

7.5.5 **Rates and Charges** (Cont'd)

(B) Circuit Mileage

Jurisdiction	Monthly Rates - Fixed	Monthly Rates - Per Mile	
Arizona – Western	$226.03	$11.19	(C)
California	273.15	17.35	
Illinois	193.74	16.52	
Indiana	231.07	31.98	
Nevada	212.64	28.66	
N Carolina	173.42	16.07	(C)

© 2024 Frontier Communications Parent, Inc. All rights reserved.

ACCESS SERVICE

7. **Special Access Service** (Cont'd)

7.5 **Voice Grade Service** (Cont'd)

7.5.5 **Rates and Charges** (Cont'd)

(C) Optional Features and Functions

Rates and charges for the Optional Features and Functions of Voice Grade Service listed in this section apply to all jurisdictions of the Issuing Carriers listed on Title Page 2 and Title Page 3.

(1) Bridging

	Monthly Rates	Nonrecurring Charge
(a) Voice Bridging		
- Per port		
- Two-Wire	$8.00	None
- Four-Wire	8.00	None
(b) Data Bridging		
- Per Port		
- Two-Wire	8.00	None
- Four-Wire	8.00	None
(c) Telephoto Bridging		
- Per port		
- Two-Wire	8.00	None
- Four-Wire	8.00	None
(d) DATAPHONE Select-A-Station Bridging		
Sequential Arrangement Ports		
- Per Circuit Connected		
- 2-Wire	21.23	None
- 4-Wire	112.80	None
Addressable Arrangement Ports		
- Per Circuit Connected		
- 2-Wire	22.76	None
- 4-Wire	115.88	None

© 2022 Frontier Communications Parent, Inc. All rights reserved.

ACCESS SERVICE

7. **Special Access Service** (Cont'd)

7.5. **Voice Grade Service** (Cont'd)

7.5.5 **Rates and Charges** (Cont'd)

		Monthly Nonrecurring Rates	Charges
(C)	Optional Features and Functions (Cont'd)		
(1)	Bridging (Cont'd)		
(e)	Telemetry and Alarm Bridging		
	Active Bridging Circuit Connections		
	- Per Circuit Connected		
	- Split Band	$8.04	None
	- Summation	1.37	None
	Passive Bridging Circuit Connections		
	- Per Circuit Connected	0.20	None
(2)	Conditioning		
	- Per Point of Termination		
(a)	C - Type	11.12	None
(b)	Improved C-Type Conditioning Options		
	- Improved Attenuation Distortion		None
	- Improved Envelope Delay Distortion	*	None
(c)	Sealing Current	None	None
(3)	Improved Return Loss for Effective Four-Wire Transmission		
	- Per Point of Termination		
	- Two-Wire	3.75	None
	- Four-Wire	3.75	None
(4)	Customer Specified Receive Level		
	- Per Two-Wire Point of Termination	None	None

* Applied at the same rate as C-Type Conditioning regardless if one or both Improved C-Type options are ordered.

© 2022 Frontier Communications Parent, Inc. All rights reserved.

ACCESS SERVICE

7. **Special Access Service** (Cont'd)

7.5 **Voice Grade Service** (Cont'd)

7.5.5 **Rates and Charges** (Cont'd)

		Monthly Rates	Nonrecurring Charges
(C)	Optional Features and Functions (Cont'd)		
(5)	Multiplexing Voice to Telegraph Grade - Per Arrangement	$216.75	$200.00
(6)	Data Capability - Per Point of Termination	2.00	0.00
(7)	Telephoto Capability - Per Point of Termination	2.81	0.00
(8)	Signaling Capability - Per Point of Termination	16.51	None

- In lieu of ++, substitute appropriate two digit code from following list to specify type of signaling.

AB
AC
CT
DX
DY
EA
EB
EC
EX
GO
GS
LA
LB
LC
LO
LR
LS
RV
SF

© 2022 Frontier Communications Parent, Inc. All rights reserved.

ACCESS SERVICE

7. **Special Access Service** (Cont'd)

7.5 **Voice Grade Service** (Cont'd)

7.5.5 **Rates and Charges** (Cont'd)

		Monthly Rates	Nonrecurring Charges
(C)	Optional Features and Functions (Cont'd)		
(9)	Selective Signaling Arrangement		
	- Per Arrangement	$32.11	None
(10)	Transfer Arrangement (Key Activated* or Dial Up**)		
	- Per Four Port Arrangement, including control circuit termination***	3.00	None
	- Per Five Port Arrangement, in-including control circuit termination***	6.85	None

* The key activated control circuit is rated as a Metallic Circuit Termination in lieu of T6ECS) and Circuit Mileage, if applicable .

** The Dial-up option requires the customer to purchase the Controller Arrangement from 13.3.8 following.

*** An additional Circuit Termination charge will apply whenever a spare circuit is configured as a leg to the customer's premises. Additional circuit mileage charges will apply when the transfer arrangement is not located in the customer premises serving wire center.

© 2022 Frontier Communications Parent, Inc. All rights reserved.

7. **Special Access Service** (Cont'd)

7.6 **Program Audio Service**

7.6.1 **Basic Circuit Description**

A Program Audio circuit is a circuit measured in Hz for the transmission of a complex signal voltage. The actual bandwidth is a function of the channel interface selected by the customer. The nominal frequency bandwidths are from 50 to 15000 Hz, from 200 to 3500 Hz, from 100 to 5000 Hz or from 50 to 8000 Hz. Only one-way transmission is provided. Program Audio circuits are provided between customer designated premises or between a customer designated premises and a Telephone Company hub.

7.6.2 **Technical Specifications Packages**

	Package AP-				
Parameter	C*	1	2	3	4
Actual Measured Loss	X	X	X	X	X
Amplitude Tracking	X				
Crosstalk	X	X	X	X	X
Distortion Tracking	X				
Gain/Frequency Distortion	X	X	X	X	X
Group Delay	X				
Noise	X	X	X	X	X
Phase Tracking	X				
Short-Term Gain Stability	X				
Short-Term Loss	X				
Total Distortion	X	X	X	X	X

The technical specifications are delineated in Technical Reference GR-337-CORE, Issue 1.

* The desired parameters are selected by the customer from the list available parameters.

© 2022 Frontier Communications Parent, Inc. All rights reserved.

7. **Special Access Service** (Cont'd)

7.6 **Program Audio Service** (Cont'd)

7.6.3 **Channel Interfaces**

The following channel interfaces (CIs) define the bandwidths that are available for a Program Audio circuit:

CI	Bandwidth
PG-1	Nominal frequency from 50 to 15000 Hz
PG-3	Nominal frequency from 200 to 3500 Hz
PG-5	Nominal frequency from 100 to 5000 Hz
PG-8	Nominal frequency from 50 to 8000 Hz

Compatible channel interfaces are set forth in 9 following.

7.6.4 **Optional Features and Functions**

(1) Central Office Bridging Capability

Distribution Amplifier

(2) Gain Conditioning

Control of 1004 Hz AML at initiation of service to OdB ± 0.5 dB.

(3) Stereo

Provision of a pair of gain/phase equalized channels for stereo applications. (Additional AP channel must be ordered separately).

The following table shows the technical specifications packages with which the optional features and functions are available.

	Available with Technical Specifications Package AP-				
	C	1	2	3	4
Central Office Bridging Capability	X	X	X	X	X
Gain Conditioning	X	X	X	X	X
Stereo	X				X

© 2022 Frontier Communications Parent, Inc. All rights reserved.

ACCESS SERVICE

7. **Special Access Services** (Cont'd)

7.6 **Program Audio Service** (Cont'd)

7.6.5 **Rates and Charges**

(A) Circuit Termination
- Per Point of Termination—Competitive Counties
-

200-3500 Hz

Jurisdiction	Monthly Rates	Daily Rates	Nonrecurring Charge
Arizona - Western	$39.30	$3.92	$200.00
California	37.94	3.79	200.00
Illinois	49.22	4.92	200.00
Indiana	32.94	3.30	200.00
Nevada	44.17	4.42	200.00
N Carolina	21.42	2.15	200.00

(D)

© 2022 Frontier Communications Parent, Inc. All rights reserved.

ACCESS SERVICE

7. **Special Access Services** (Cont'd)

7.6 **Program Audio Service** (Cont'd)

7.6.5 **Rates and Charges** (Cont'd)

(A) Circuit Termination (Cont'd)
- Per Point of Termination—Competitive Counties
-

	100-5000 Hz		
Jurisdiction	**Monthly Rates**	**Daily Rates**	**Nonrecurring Charge**
Arizona - Western	$39.30	$3.92	$200.00
California	37.94	3.79	200.00
Illinois	49.22	4.92	200.00
Indiana	32.94	3.30	200.00
Nevada	44.17	4.42	200.00
N Carolina	21.42	2.15	200.00

(D)

© 2022 Frontier Communications Parent, Inc. All rights reserved.

ACCESS SERVICE

7. **Special Access Services** (Cont'd)

7.6 **Program Audio Service** (Cont'd)

7.6.5 **Rates and Charges** (Cont'd)

(A) Circuit Termination (Cont'd)
- Per Point of Termination—Competitive Counties
-

	50-8000 Hz		
Jurisdiction	**Monthly Rates**	**Daily Rates**	**Nonrecurring Charge**
Arizona - Western	$39.30	$3.92	$200.00
California	37.94	3.79	200.00
Illinois	49.22	4.92	200.00
Indiana	32.94	3.30	200.00
Nevada	44.17	4.42	200.00
N Carolina	21.42	2.15	200.00

(D)

© 2022 Frontier Communications Parent, Inc. All rights reserved.

ACCESS SERVICE

7. **Special Access Services** (Cont'd)

7.6 **Program Audio Service** (Cont'd)

7.6.5 **Rates and Charges** (Cont'd)

(A) Circuit Termination (Cont'd)
- Per Point of Termination—Competitive Counties
-

	50-15000 Hz		
Jurisdiction	**Monthly Rates**	**Daily Rates**	**Nonrecurring Charge**
Arizona - Western	$39.30	$3.92	$200.00
California	37.94	3.79	200.00
Illinois	49.22	4.92	200.00
Indiana	32.94	3.30	200.00
Nevada	44.17	4.42	200.00
N Carolina	21.42	2.15	200.00

(D)

© 2022 Frontier Communications Parent, Inc. All rights reserved.

ACCESS SERVICE

7. **Special Access Services** (Cont'd)

7.6 **Program Audio Service** (Cont'd)

7.6.5 **Rates and Charges** (Cont'd)

(B) Circuit Mileage

	200-3500 Hz	
Jurisdiction	**Monthly Rate Fixed**	**Monthly Rate Per Mile**
Arizona - Western	$67.30	$3.88
California	55.20	4.64
Illinois	59.40	6.04
Indiana	59.81	6.05
Nevada	67.30	3.88
N Carolina	45.60	8.64

(D)

© 2022 Frontier Communications Parent, Inc. All rights reserved.

ACCESS SERVICE

7. **Special Access Services** (Cont'd)

7.6 **Program Audio Service** (Cont'd)

7.6.5 **Rates and Charges** (Cont'd)

(B) Circuit Mileage (Cont'd)

	200-3500 Hz	
Jurisdiction	**Daily Rate Fixed**	**Daily Rate Per Mile**
Arizona - Western	6.66	.38
California	5.52	.47
Illinois	5.94	.60
Indiana	5.94	.60
Nevada	6.60	.38
N Carolina	4.56	.86

(D)

© 2022 Frontier Communications Parent, Inc. All rights reserved.

ACCESS SERVICE

7. **Special Access Services** (Cont'd)

7.6 **Program Audio Service** (Cont'd)

7.6.5 **Rates and Charges** (Cont'd)

(B) Circuit Mileage (Cont'd)

	100-5000 Hz	
Jurisdiction	**Monthly Rate Fixed**	**Monthly Rate Per Mile**
Arizona - Western	$67.30	$3.88
California	55.20	4.64
Illinois	59.40	6.04
Indiana	59.81	6.05
Nevada	67.30	3.88
N Carolina	45.60	8.64

(D)

© 2022 Frontier Communications Parent, Inc. All rights reserved.

ACCESS SERVICE

7. **Special Access Services** (Cont'd)

7.6 **Program Audio Service** (Cont'd)

7.6.5 **Rates and Charges** (Cont'd)

(B) Circuit Mileage (Cont'd)

	100-5000 Hz	
Jurisdiction	**Daily Rate Fixed**	**Daily Rate Per Mile**
Arizona - Western	$6.66	$.38
California	5.52	.47
Illinois	5.94	.60
Indiana	5.94	.60
Nevada	6.60	.38
N Carolina	4.56	.86

(D)

© 2022 Frontier Communications Parent, Inc. All rights reserved.

ACCESS SERVICE

7. **Special Access Services** (Cont'd)

7.6 **Program Audio Service** (Cont'd)

7.6.5 **Rates and Charges** (Cont'd)

(B) Circuit Mileage (Cont'd)

	50-8000 Hz	
Jurisdiction	**Monthly Rate Fixed**	**Monthly Rate Per Mile**
Arizona - Western	$67.30	$3.88
California	55.20	4.64
Illinois	59.40	6.04
Indiana	59.81	6.05
Nevada	67.30	3.88
N Carolina	45.60	8.64

(D)

© 2022 Frontier Communications Parent, Inc. All rights reserved.

ACCESS SERVICE

7. **Special Access Services** (Cont'd)

7.6 **Program Audio Service** (Cont'd)

7.6.5 **Rates and Charges** (Cont'd)

(B) Circuit Mileage (Cont'd)

	50-8000 Hz	
Jurisdiction	**Daily Rate Fixed**	**Daily Rate Per Mile**
Arizona - Western	$6.66	$.38
California	5.52	.47
Illinois	5.94	.60
Indiana	5.94	.60
Nevada	6.60	.38
N Carolina	4.56	.86

(D)

© 2022 Frontier Communications Parent, Inc. All rights reserved.

ACCESS SERVICE

7. **Special Access Services** (Cont'd)

7.6 **Program Audio Service** (Cont'd)

7.6.5 **Rates and Charges** (Cont'd)

(B) Circuit Mileage (Cont'd)

	50-15000 Hz	
Jurisdiction	**Monthly Rate Fixed**	**Monthly Rate Per Mile**
Arizona - Western	$67.30	$3.88
California	55.20	4.64
Illinois	59.40	6.04
Indiana	59.81	6.05
Nevada	67.30	3.88
N Carolina	45.60	8.64

(D)

© 2022 Frontier Communications Parent, Inc. All rights reserved.

ACCESS SERVICE

7. **Special Access Services** (Cont'd)

7.6 **Program Audio Service** (Cont'd)

7.6.5 **Rates and Charges** (Cont'd)

(B) Circuit Mileage (Cont'd)

	50-15000 Hz	
Jurisdiction	**Daily Rate Fixed**	**Daily Rate Per Mile**
Arizona - Western	$6.66	$.38
California	5.52	.47
Illinois	5.94	.60
Indiana	5.94	.60
Nevada	6.60	.38
N Carolina	4.56	.86

(D)

© 2022 Frontier Communications Parent, Inc. All rights reserved.

ACCESS SERVICE

7. **Special Access Services** (Cont'd)

7.6 **Program Audio Service** (Cont'd)

7.6.5 **Rates And Charges** (Cont'd)

(C) Optional Features and Functions

Rates and charges for the Optional Features and Functions of Program Audio Service listed in this section apply to all jurisdictions of the Issuing Carriers listed on Title Page 2 and Title Page 3.

		Monthly Fixed	Daily Rates	Nonrecurring Charges Monthly	Nonrecurring Charges Daily
(1)	Bridging, Distribution Amplifier				
	- Per Port	$1.00	$.10	None	None
(2)	Gain Conditioning				
	- Per Service	1.00	.10	None	None
(3)	Stereo				
	- Per service	None	None	None	None

© 2022 Frontier Communications Parent, Inc. All rights reserved.

ACCESS SERVICE

7. Special Access Service (Cont'd)

7.7 Video Digital Transport Service TV-1 Analog Service

7.7.1 Basic Circuit Description

A Video Digital Transport Service TV-1 Analog circuit is a circuit with one-way transmission capability for a standard 525 line/60 field monochrome, or National Television Systems Committee color video signal and one or two associated 5 or 15 kHz audio signal(s). The bandwidth for a video circuit is either 30 Hz to 4.5 MHz or 30 Hz to 6.6 MHz. The associated audio signal(s) may be either duplexed or provided as one or two separate circuits. The provision and the bandwidth of the associated audio signal(s) is a function of the channel interface selected by the customer. Video Digital Transport Service TV-1 Analog circuits are provided between customer designated premises or between a customer designated premises and a Telephone Company hub.

7.7.2 Technical Specifications Packages

	Package TV-		
Parameter	C*	1	2
Amplitude vs. Frequency Response	X		
Chrominance/Luminance Inequalities			
Gain	X	X	X
Delay	X	X	X
Chrominance/Luminance Intermodulation	X		
Chrominance Nonlinear Gain	X		
Chrominance Nonlinear Phase	X		
Crosstalk	X		X
Differential Gain	X	X	X
Differential Phase	X	X	X
Dynamic Gain (picture and sync signal)	X		
Field-Time Distortion	X	X	X
Gain/Frequency Distortion	X	X	X
Gain Stability	X	X	X
Insertion Gain	X	X	X
Line-Time Distortion	X	X	X
Long-Time Distortion	X	X	X

* The desired parameters are selected by the customer from the list of available parameters.

© 2022 Frontier Communications Parent, Inc. All rights reserved.

ACCESS SERVICE

7. **Special Access Service** (Cont'd)

7.7 **Video Digital Transport Service TV-1 Analog Service** (Cont'd)

7.7.2 **Technical Specifications Packages** (Cont'd)

Parameter	Package TV- C*	1	2
Luminance Nonlinearity	X		
Luminance Signal/CCIR			
Weighted Noise	X	X	X
Short-Time Distortion			
2 T Pulse	X	X	X
T - Bar Ringing	X	X	X
Signal/15 kHz Flat			
Weighted Noise	X	X	X
Signal/Low Frequency Noise	X		
Stereo Gain Difference	X	X	
Stereo Phase Difference	X	X	
Total Harmonic Distortion	X	X	X
Transient Sync Signal			
Non-Linearity	X		
Video/Audio Delay Difference	X		

The technical specifications are delineated in Technical Reference GR-338-CORE, Issue 1, and associated Addendum.

7.7.3

Channel Interfaces

The following channel interfaces (CIs) define the bandwidth and the provision of the audio signal(s) associated with a Video Digital Transport Service TV-1 Analog circuit:

CI	Audio Bandwidth	Provision Audio Channels
02TV7.15	15kHz	1 or 2 Channels, separate
04TV6.15	15kHz	1 or 2 Channels, separate
04TV6.15A	15kHz	1, 2, 3, or 4 Channels, separate
04TV6.20A	20kHz	1, 2, 3, or 4 Channels, separate
04TV7.15	15kHz	1 or 2Channels, separate
04TV7.15A	15kHz	1, 2, 3 or 4 Channels, separate
04TV7.20A	20kHz	1, 2, 3, or 4 Channels, separate

* The desired parameters are selected by the customer from the list of available parameters.

© 2022 Frontier Communications Parent, Inc. All rights reserved.

ACCESS SERVICE

7. **Special Access Service** (Cont'd)

7.7. **Video Digital Transport Service TV-1 Analog Service** (Cont'd)

7.7.3 **Channel Interfaces** (Cont'd)

CI	Bandwidth	Provision Audio Channels
06TV6.15	15kHz	1 or 2 Channels, separate
06TV6.15A	15kHz	1, 2, 3 or 4 Channels, separate
06TV6.20A	20kHz	1, 2, 3, or 4 Channels, separate
06TV7.15	5kHz	1 or 2 Channels, separate
08TV6.15A	15kHz	1, 2, 3 or 4 Channels, separate
10TV6.15A	15kHz	1, 2, 3 or 4 Channels, separate
10TV6.20A	20kHz	1, 2, 3, or 4 Channels, separate

Compatible channel interfaces are set forth in 9. following.

7.7.4 **Rate Application**

(A) General

Video Digital Transport Service TV1-Analog service is available under a month-to-month arrangement or on a term commitment plan of 1, 2, 3 or 5 years. The month-to-month offering requires a minimum service period of three months.

Where appropriate facilities are not available, Special Construction charges may apply as set forth in Section 5.1.12 preceding to provide such facilities required to meet the customer's request.

(1) Video Digital Transport Service TV1-Analog Dedicated Video Line

The Video Digital Transport Service TV1-Analog Dedicated Video Line (DVL) rate element provides for a non-switched Video Digital Transport Service TV1-Analog line connection between the customer dedicated location and its serving wire center for the purpose of point-to-point video transmission without connecting to a Telephone Company video switch.

(2) Video Digital Transport Service TV1-Analog Transport

The Video Digital Transport Service TV1-Analog Transport rate element provides for the interoffice transmission facilities for service arrangements where the customer designated locations are not served by the same wire center. Where a service is provided by more than one company, transport will be measured to the meet point as set forth under Section 5.2. Transport rates are applied per airline mile.

(3) Video Digital Transport Service TV1-Analog Optional Features

One or two audio channels are provided with each Video Digital Transport Service TV1-Analog arrangement. Auxiliary audio channels 4TV5, 6TV5 and TV15 are provided as part of Video Digital Transport Service TV1-Analog service at no additional charge.

© 2022 Frontier Communications Parent, Inc. All rights reserved.

ACCESS SERVICE

7. **Special Access Service** (Cont'd)

7.7. **Video Digital Transport Service TV-1 Analog Service** (Cont'd)

7.7.4 **Rate Application** (Cont'd)

(B) Term Commitment Plan# (TCP)

(1) General

Video Digital Transport Service TV1-Analog service is available on a Term Commitment Plan (TCP) of 1, 2, 3 or 5 year plan rates as set forth under 7.7.5 following.

(a) The customer must designate on the ASR the commitment term selected.

(b) Inside moves in accordance with 7.2.1(D)(4)(A) will not incur termination liability charges.

(c) Outside moves in accordance with 7.2.1(D)(4)(B) will allow the customer to retain the same TCP period. Any other move will be treated as a disconnect of the service and termination liability charges will apply.

(2) Change in Term Length

Prior to the completion of the selected TCP term, the customer may elect to convert to a new TCP of the same or different term length subject to the following:

(a) No term credit is applied for payments made under the plan.

(b) If the new term selected is shorter than the time remaining under the existing TCP, the change to the new TCP constitutes a disconnect of the existing TCP and termination liability charges will apply.

(3) Renewal Options

(a) At the expiration of a TCP period, the Telephone Company will automatically renew the service at the same TCP period unless the customer chooses to convert to month-to-month, to convert to a different TCP, or to discontinue service.

(b) Conversion to a different TCP period will require the customer to submit a change order ASR. Conversion to a different TCP period will be allowed without application of any nonrecurring or ordering charges.

(c) Conversion to month-to-month rates will be treated as a disconnect of service and establishment of new service. If no other changes are ordered, no NRCs will apply.

Effective November 21, 2017, new subscriptions to Term Commitment Plan are no longer permitted. TCP customers subscribed as of November 21, 2017 may continue with their existing subscriptions. If at any time an existing customer terminates its TCP, the customer may not re-subscribe to the plan.

© 2022 Frontier Communications Parent, Inc. All rights reserved.

ACCESS SERVICE

7. **Special Access Service** (Cont'd)

7.7. **Video Digital Transport Service TV-1 Analog Service** (Cont'd)

7.7.4 **Rate Application** (Cont'd)

(B) Term Commitment Plan (TCP)# (Cont'd)

(4) Notification of Discontinuance

(C)

An ASR for discontinuance of a TCP arrangement must be received by the Telephone Company at least thirty (30) business days prior to actual disconnect of service. Monthly rates will apply for a period of thirty (30) business days from the date the Telephone Company receives disconnect notification or until the requested disconnect date, if longer than thirty (30) business days. (C)

(5) Termination Liability

When a TCP is discontinued prior to the end of the commitment period, termination liability charges, as set forth following, will apply based on the remainder of the TCP period in effect at the time of disconnect.

(a) One-Year TCP - 50% of any remaining portion of the first year's monthly rates.

(b) Two-Year TCP - 50% of any remaining portion of the first year's monthly rates. In addition, for any remaining portion of the second year, the customer will be liable for 10% of the total monthly rates in that time period.

(c) Three-Year TCP - 50% of any remaining portion of the first year's monthly rates. In addition, for any remaining portion of the second and third years, the customer will be liable for 10% of the total monthly rates in that time period.

(d) Five-Year TCP - 50% of any remaining portion of the first year's monthly rates. In addition, for any remaining portion of the second through fifth years, the customer will be liable for 20% of the total monthly rates in that time period.

(6) Reserved for Future Use (C)

Service Availability is limited. Refer to # footnote on page 7-92.

© 2024 Frontier Communications Parent, Inc. All rights reserved.

ACCESS SERVICE

7. **Special Access Service** (Cont'd)

7.7 **Video Digital Transport Service TV-1 Analog Service** (Cont'd)

7.7.5 **Rates and Charges**

(A) Video Digital Transport Service TV-1 Analog Dedicated Video Line
- Per Point of Termination— Competitive Counties

	Month-to-Month		One Year	
	Nonrecurring Charge	Monthly Rate	Nonrecurring Charge	Monthly Rate
Jurisdiction				
Arizona	$1,000.00	$535.00	$500.00	$511.00
California	1,000.00	535.00	500.00	511.00
Illinois	1,000.00	535.00	500.00	511.00
Indiana	1,000.00	535.00	500.00	511.00
North Carolina	1,000.00	535.00	500.00	511.00
Nevada	1,000.00	535.00	500.00	511.00

(D)

© 2022 Frontier Communications Parent, Inc. All rights reserved.

ACCESS SERVICE

7. **Special Access Service** (Cont'd)

7.7 **Video Digital Transport Service TV-1 Analog Service** (Cont'd)

7.7.5 **Rates and Charges (Cont'd)**

(A) Video Digital Transport Service TV-1 Analog Dedicated Video Line (Cont'd)
- Per Point of Termination—Competitive Counties

	Two Year		Three Year		Five Year	
	Nonrecurring Charge	Monthly Rate	Nonrecurring Charge	Monthly Rate	Nonrecurring Charge	Monthly Rate
Jurisdiction						
Arizona	$0.00	$500.00	$0.00	$495.00	$0.00	$490.00
California	0.00	500.00	0.00	495.00	0.00	490.00
Illinois	0.00	500.00	0.00	495.00	0.00	490.00
Indiana	0.00	500.00	0.00	495.00	0.00	490.00
North Carolina	0.00	500.00	0.00	495.00	0.00	490.00
Nevada	0.00	500.00	0.00	495.00	0.00	490.00

(D)

© 2022 Frontier Communications Parent, Inc. All rights reserved.

ACCESS SERVICE

7. **Special Access Service** (Cont'd)

7.7 **Video Digital Transport Service TV-1 Analog Service** (Cont'd)

7.7.5 **Rates and Charges** (Cont'd)

(B) Video Digital Transport Service TV-1 Analog Transport
- per airline mile

	Month-to-Month		One Year	
	Nonrecurring Charge	Monthly Rate	Nonrecurring Charge	Monthly Rate
Jurisdiction				
Arizona	N/A	$150.00	N/A	$145.00
California	N/A	150.00	N/A	145.00
Illinois	N/A	150.00	N/A	145.00
Indiana	N/A	150.00	N/A	145.00
North Carolina	N/A	150.00	N/A	145.00
Nevada	N/A	150.00	N/A	145.00

(D)

© 2022 Frontier Communications Parent, Inc. All rights reserved.

ACCESS SERVICE

7. **Special Access Service** (Cont'd)

7.7 **Video Digital Transport Service TV-1 Analog Service** (Cont'd)

7.7.5 **Rates and Charges** (Cont'd)

(B) Video Digital Transport Service TV-1 Analog Transport (Cont'd)
- per airline mile

	Two Year		Three Year		Five Year	
	Nonrecurring Charge	Monthly Rate	Nonrecurring Charge	Monthly Rate	Nonrecurring Charge	Monthly Rate
Jurisdiction						
Arizona	N/A	$140.00	N/A	$135.00	N/A	$130.00
California	N/A	140.00	N/A	135.00	N/A	130.00
Illinois	N/A	140.00	N/A	135.00	N/A	130.00
Indiana	N/A	140.00	N/A	135.00	N/A	130.00
North Carolina	N/A	140.00	N/A	135.00	N/A	130.00
Nevada	N/A	140.00	N/A	135.00	N/A	130.00

(D)

© 2022 Frontier Communications Parent, Inc. All rights reserved.

ACCESS SERVICE

7. Special Access Services (Cont'd)

7.8 Wideband Analog Service

7.8.1 Basic Circuit Description

A Wideband Analog circuit is a circuit with a bandwidth measured in kHz for the transmission of a wideband signal. The actual bandwidth is a function of the channel interface selected by the customer. The bandwidths are from 60 to 108 kHz (Group), from 312 to 552 kHz (Supergroup), from 564 to 3084 kHz (Mastergroup), from 300 Hz to 18 kHz, from 29 to 44 kHz or from 28 to 44 kHz. Wideband Analog circuits are provided between customer designated premises or between a customer designated premises and a Telephone Company hub.

7.8.2 Technical Specifications Packages

	Package WA-				
Parameter	1	2	2A	3	4
Amplitude Stability	X	X			
Background Noise	X	X	X	X	X
Frequency Shift	X	X	X		
Gain/Frequency Characteristics of:					
- Group Connections	X			X	X
- Supergroup Connections		X			
- Mastergroup Connections			X		
Impulse Noise	X	X	X		
Net Loss Variations	X	X	X	X	X
Pilot Slot	X	X	X		
Spurious Single Frequency Tone	X	X	X		

The technical specifications are delineated in Technical Reference PUB TR-NPL-000339.

© 2022 Frontier Communications Parent, Inc. All rights reserved.

ACCESS SERVICE

7. **Special Access Service** (Cont'd)

7.8 **Wideband Analog Service** (Cont'd)

7.8.3 **Channel Interfaces**

The following channel interfaces (CIs) define the bandwidths that are available for a Wideband Analog channel:

CI	Bandwidth
AH-B	60 kHz to 108 kHz (Group)
AH-C	312 kHz to 552 (Supergroup)
AD-D	564 kHZ to 3084 kHz (Mastergroup)
WD-1	300 Hz to 18 kHz
WD-2	29 kHz to 44 kHz
WD-3	28 kHz to 44 kHz

Compatible channel interfaces are set forth in 9. following.

7.8.4 **Optional Features and Functions**

(A) Central Office Multiplexing

(1) Mastergroup to Supergroup

An arrangement that converts a Mastergroup circuit to ten Supergroup circuits using frequency division multiplexing.

(2) Supergroup to Group

An arrangement that converts a Supergroup circuit to five Group circuits using frequency division multiplexing.

(3) Group to Voice

An arrangement that converts a Group circuit to twelve Voice Grade circuits using frequency division multiplexing.

© 2022 Frontier Communications Parent, Inc. All rights reserved.

ACCESS SERVICE

7. **Special Access Service** (Cont'd)

7.8 **Wideband Analog Service** (Cont'd)

7.8.4 **Optional Features and Functions** (Cont'd)

(A) Central Office Multiplexing (Cont'd)

(4) Group to DS1

An arrangement that converts two Group circuit to DS1 circuit using analog to digital conversion.

The following table shows the technical specifications packages with which the optional features and functions are available.

	Available with Technical Specifications Package WA-				
	1	2	2A	3	4
Central Office Multiplexing:					
Mastergroup to Supergroup			X		
Supergroup to Group		X			
Group to Voice	X				
Group to DS1*					

© 2022 Frontier Communications Parent, Inc. All rights reserved.

ACCESS SERVICE

7. **Special Access Services** (Cont'd)

7.8 **Wideband Analog Services** (Cont'd)

7.8.5 **Rates and Charges**

(A) Circuit Termination
- Per Point of Termination

Monthly Rates and Nonrecurring Charges for all jurisdictions of the Issuing Carriers listed on Title Pages 2, 3 and 4 will be determined on an Individual Case Basis and filed in Section 7.12 following.

Available frequency bandwidths formats are as follows:

Frequency Bandwidths
60 kHz - 108 kHz
312 kHz - 552 kHz
564 kHz - 3084 kHz
300 Hz - 18 kHz
29 kHz - 44 kHz

© 2022 Frontier Communications Parent, Inc. All rights reserved.

ACCESS SERVICE

7. **Special Access Service** (Cont')

7.8 **Wideband Analog Services** (Cont'd)

7.8.5 **Rates and Charges** (Cont'd)

(B) Circuit Mileage

Fixed and Per Mile Monthly Rates for all jurisdictions of the Issuing Carriers listed on Title Pages 2, 3 and 4 will be determined on an Individual Case Basis and filed in Section 7.12 following.

Available bandwidths formats are as follows.

Frequency Bandwidth
60-108 kHz
312-552 kHz
564-3084 kHz
300 Hz-18 kHz
29-44 kHz

© 2022 Frontier Communications Parent, Inc. All rights reserved.

ACCESS SERVICE

7. **Special Access Services** (Cont'd)

7.8 **Wideband Analog Services** (Cont'd)

7.8.5 **Rates and Charges** (Cont'd)

(C) Optional Features and Functions

(1) Multiplexing

Fixed and Per Mile Monthly Rates for all jurisdictions of the Issuing Carriers listed on Title Pages 2, 3 and 4 will be determined on an Individual Case Basis and filed in Section 7.12 following.

Available multiplexing arrangements formats are as follows:

Multiplexing Arrangement
Mastergroup to Supergroup
Supergroup to Group
Group to Voice
Group to DS1*

* Requires two 60-108 kHz Circuit Terminations and Circuit Mileage, one 1.544 Mbps Circuit Mileage and either a 1.544 Circuit Termination or a DS1 to Voice Multiplexing optional feature, depending on whether the service terminates at a customers premises or was purchased as a facility, to a Telephone Company hub for multiplexing to Voice Grade.

© 2022 Frontier Communications Parent, Inc. All rights reserved.

ACCESS SERVICE

7. Special Access Services (Cont'd)

7.9 Wideband Data Service

7.9.1 Basic Circuit Description

A Wideband Data circuit is an analog circuit for the transmission of synchronous serial data at the rate of 19.2, 50.0, or 230.4 kbps or of asynchronous serial data at rates of up to 19.2, 50.0, or 230.4 kbps. Optional arrangements are available for transmission of synchronous serial data at 18.75 or 40.8 kbps. The actual bit rate is a function of the channel interface selected by the customer. This service requires a 303 Data Station(s). The 303 Data Station provides coupling between the customers business machine and the wideband data transmission medium. A voice band coordinating channel is also provided. Wideband Data circuits are provided between customer designated premises.

7.9.2 Technical Specifications Packages

	Package WD-		
Parameter	1	2	3
Error-Free Seconds	X	X	X

While in service, the monthly average of error-free seconds will be equal to or greater than 98.75%.

7.9.3 Channel Interfaces

The following channel interfaces (CIs) define the bit rates that are available for a Wideband Data circuit:

CI	Bit Rate
WB-18S	18.75 kbps, synchronous
WB-19A	up to 19.2 kbps, asynchronous
WB-19S	19.2 kbps, synchronous
WB-23A	up to 230.4 kbps, asynchronous
WB-23S	230.4 kbps, synchronous
WB-40S	40.8 kbps, synchronous
WB-50A	up to 50.0 kbps, asynchronous
WB-50S	50.0 kbps, synchronous

Compatible channel interfaces are set forth in 9. following.

© 2022 Frontier Communications Parent, Inc. All rights reserved.

ACCESS SERVICE

7. **Special Access Service** (Cont'd)

7.9 **Wideband Data Service** (Cont'd)

7.9.4 **Optional Features and Functions**

(A) Key Activated Transfer Arrangement

An arrangement that affords the customer an additional measure of flexibility in the use of their access circuit(s). The arrangement can be utilized to transfer a leg of a Special Access Service to either a spare or working circuit that terminates in either the same or a different customer premises. A key activated control service is required to operate the transfer arrangement. A spare circuit, if required, is not included as a part of the option.

The following table shows the technical specifications packages with which the optional features and functions are available.

	Available with Technical Specifications Package WD-		
	1	2	3
Key Activated Transfer Arrangement	X	X	X

© 2022 Frontier Communications Parent, Inc. All rights reserved.

ACCESS SERVICE

7. **Special Access Services** (Cont'd)

7.9 **Wideband Data Service** (Cont'd)

7.9.5 **Rates and Charges**

(A) Circuit Termination—Competitive Counties

- Per Point of Termination
-

Jurisdiction	50.0 or 40.8 Kbps Monthly Rate	Nonrecurring Charge
Arizona - Western	694.32	492.39
California	694.32	492.39
Illinois	892.24	563.05
Indiana	892.24	563.05
Nevada	694.32	492.39
N Carolina	670.00	460.20

(D)

© 2022 Frontier Communications Parent, Inc. All rights reserved.

ACCESS SERVICE

7. **Special Access Service** (Cont'd)

7.9 **Wideband Data Service** (Cont'd)

7.9.5 **Rates and Charges** (Cont'd)

(A) Circuit Termination (Cont'd)

For data speeds other than 40.8 and 50.0 kbps:

Monthly Rates for the Circuit Termination rate element of Wideband Data Service for all jurisdictions of the Issuing Carriers listed on Title Pages 2, 3 and 4 will be determined on an Individual Case Basis and filed in Section 7.12 following.

Available data speeds are as follows:

Data Speed

18.75 kbps
19.2 kbps
230.4 kbps

© 2022 Frontier Communications Parent, Inc. All rights reserved.

ACCESS SERVICE

7. Special Access Services (Cont'd)

7.9 Wideband Data Service (Cont'd)

7.9.5 Rates and Charges (Cont'd)

(B) Circuit Mileage

Jurisdiction	50.0 or 40.8 kbps Monthly Rate Fixed	50.0 or 40.8 kbps Monthly Rate Per Mile
Arizona - Western	83.84	19.05
California	83.84	19.05
Illinois	60.57	27.70
Indiana	60.57	27.70
Nevada	83.84	19.05
N Carolina	50.00	19.00
S Carolina	50.00	19.00

(D)

© 2022 Frontier Communications Parent, Inc. All rights reserved.

ACCESS SERVICE

7. **Special Access Service** (Cont'd)

7.9 **Wideband Data Service** (Cont'd)

7.9.5 **Rates and Charges** (Cont'd)

(B) Circuit Mileage (Cont'd)

For data speeds other than 40.8 and 50.0 kbps:

Fixed and Per Mile Monthly Rates for the Circuit Mileage rate element of Wideband Data Service for all jurisdictions of the Issuing Carriers listed on Title Pages 2, 3 and 4 will be determined on an Individual Case Basis and filed in Section 7.12 following.

Available data speeds and are as follows:

Data Speed

18.75 kbps
19.2 kbps
230.4 kbps

© 2022 Frontier Communications Parent, Inc. All rights reserved.

ACCESS SERVICE

7. **Special Access Services** (Cont'd)

7.9 **Wideband Data Service** (Cont'd)

7.9.5 **Rates and Charges** (Cont'd)

(C) Optional Features and Functions

Monthly Rates and Nonrecurring Charges for all jurisdictions of the Issuing Carriers listed on Title Pages 2, 3 and 4 will be determined on an Individual Case Basis and filed in Section 7.12 following.

Available Optional Features and Functions are as follows.

Optional Features
and Functions

Key Activated
Transfer Arrangement
- Per Four Port
  Arrangement, including
  control circuit termination*

(D) 303 Data Station

Monthly Rates and Nonrecurring Charges for all jurisdictions of the Issuing Carriers listed on Title Pages 2, 3 and 4 will be determined on an Individual Case Basis and filed in Section 7.12 following.

303 Data Station
- Per Point of Termination

* The key activated control circuit is rated as a Metallic Circuit Termination and Circuit Mileage, if applicable

© 2022 Frontier Communications Parent, Inc. All rights reserved.

ACCESS SERVICE

7. **Special Access Service** (Cont'd)

7.10 **Digital Data Service**

7.10.1 **Basic Circuit Description**

A Digital Data circuit is a circuit for duplex four-wire transmission of synchronous serial data at the rate of 2.4, 4.8, 9.6, 19.2, 56, or 64 Kbps. The actual bit rate is a function of the channel interface selected by the customer. The circuit provides a synchronous service with timing provided by the Telephone Company through the Telephone Company's facilities to the customer in the received bit stream. Digital Data circuits are only available via Telephone Company designated hubs and are provided between customer designated premises or between a customer designated premises and a Telephone Company hub.

The customer may provide the Channel Service Unit-type equipment or other Network Channel Terminating Equipment associated with the Digital Data circuit at the customer premises. The interim program for interconnection of such equipment is set forth in Technical Reference PUB AS No. 1, Issue II.

7.10.2 **Technical Specifications Packages**

	Package DA			
Parameter	1	2	3	4
Error-Free Seconds	X	X	X	X

The Telephone Company will provide a circuit capable of meeting a monthly average performance equal to or greater than 99.875% error-free seconds while the circuit is in service, if it is measured through a CSU equivalent which is designed, manufactured, and maintained to conform with the specifications contained in Technical Reference PUB 62310.

Voltages which are compatible with Digital Data Service are delineated in Technical Reference TR-NWT-000341, Issue 2.

© 2022 Frontier Communications Parent, Inc. All rights reserved.

ACCESS SERVICE

7 **Special Access Service** (Cont'd)

7.10 **Digital Data Service** (Cont'd)

7.10.3 **Channel Interfaces**

The following channel interfaces (CIs) define the bit rates that are available for a Digital Data circuit.

CI	Bit Rate
DU-24	2.4 Kbps
DU-48	4.8 Kbps
DU-96	9.6 Kbps
DU-19	19.2 Kbps
DU-565	56 Kbps
DU-64	64 Kbps

Compatible channel interfaces are set forth in 9. following.

7.10.4 Optional Features and Functions

(1) Central Office Bridging Capability

(2) Transfer Arrangement

An arrangement that affords the customer an additional measure of protection and/or flexibility in the use of their access circuit(s) on a 1xN basis. The arrangement can be utilized to transfer a leg of a Special Access Service to either a spare or working circuit that terminates in either the same or a different customer designated premises. This arrangement is only available at a Telephone Company designated hub. A key activated or dial-up control service is required to operate the transfer arrangement. A spare circuit, if required, is not included as a part of the option.

© 2022 Frontier Communications Parent, Inc. All rights reserved.

ACCESS SERVICE

Special Access Service (Cont'd)

Digital Data Service (Cont'd)

Rates and Charges

Circuit Termination—Competitive Counties
- Per Point of Termination –
  End User - Competitive Counties
  IC CDL – All Counties

	2.4, 4.8, 9.6 & 19.2 Kbps		
Jurisdiction	Monthly **Rate**	Nonrecurring **Charge**	
Arizona - Western	$999.27	$3,937.84	(C)
California	1,059.30	3,937.84	
Illinois	1,012.19	3,937.84	
Indiana	1,706.51	3,937.84	
Nevada	1,589.00	3,937.84	
N Carolina	1,129.83	3,937.84	(C)

© 2024 Frontier Communications Parent, Inc. All rights reserved.

ACCESS SERVICE

7. **Special Access Service** (Cont'd)

7.10 **Digital Data Service** (Cont'd)

7.10.5 **Rates and Charges** (Cont'd)

(A) Circuit Termination—Competitive Counties (Cont'd)
- Per Point of Termination –
End User - Competitive Counties
IC CDL – All Counties

	56. & 64 Kbps		
Jurisdiction	Monthly **Rate**	Nonrecurring **Charge**	
Arizona - Western	$ 1,153.79	$3,937.84	(C)
California	1,388.79	3,937.84	
Illinois	1,200.42	3,937.84	
Indiana	1,871.25	3,937.84	
Nevada	1,918.53	3,937.84	
N Carolina	1,671.37	3,937.84	(C)

© 2024 Frontier Communications Parent, Inc. All rights reserved.

ACCESS SERVICE

7. Special Access Service (Cont'd)

7.10 Digital Data Service (Cont'd)

7.10.5 Rates and Charges (Cont'd)

(B) Circuit Mileage – All Speeds

Jurisdiction	Monthly Rate Fixed	Monthly Rate Per Mile	
Arizona - Western	$338.99	$42.20	(C)
California	268.08	49.76	
Illinois	434.25	96.54	
Indiana	767.72	102.40	
Nevada	299.75	82.55	
N Carolina	197.67	34.18	(C)

© 2024 Frontier Communications Parent, Inc. All rights reserved.

ACCESS SERVICE

7. **Special Access Service** (Cont'd)

7.10 **Digital Data Service** (Cont'd)

7.10.5 **Rates and Charges** (Cont'd) (C)

(B) **Reserved**

© 2022 Frontier Communications Parent, Inc. All rights reserved.

ACCESS SERVICE

7. **Special Access Service** (Cont'd)

7.10 **Digital Data Service** (Cont'd)

7.10.5 **Rates and Charges** (Cont'd)

(C) Optional Features and Functions

Monthly Rates and Nonrecurring Charges for the Optional Features and Functions of Digital Data Service listed in this section apply to all jurisdictions of the Issuing Carriers listed on Title Pages 2, 3 and 4.

Optional Features and Functions	Monthly Rates	Nonrecurring Charges
(1) Bridging - Per Port	$11.00	None
(2) Loop Transfer Arrangement (Key Activated* or Dial-Up**) - Per Four-Port	XTD	5.96
Arrangement***	None	

* The key activated control is rated as a Metallic Circuit Termination and Circuit Mileage, if applicable .

** The Dial-Up option requires the customer to purchase the Controller Arrangement from 8.7(A) following.

*** An additional Circuit Termination charge will apply whenever a spare circuit is configured as a leg to the customer's premises. Additional Circuit Mileage charges will also apply when the transfer arrangement is not located in the customer premises serving wire center.

© 2022 Frontier Communications Parent, Inc. All rights reserved.

ACCESS SERVICE

7. Special Access Service (Cont'd)

7.11 High Capacity Service*

7.11.1 Basic Circuit Description

A High Capacity circuit is a circuit for the transmission of nominal 64.0 kbps* or 1.544, 3.152, 6.312, 44.736, or 274.176 Mbps isochronous serial data. The actual bit rate is a function of the channel interface selected by the customer. High Capacity circuits are provided between customer designated premises or between a customer designated premises and a Telephone Company hub. High Capacity DS1 and DS3 services may also be connected to customer transmission equipment and facilities where the customer is provided EIS as defined in Section 17. High Capacity circuits may also be connected to an in-service Telephone Company provided integrated optical service, provided that such connections are technically and operationally feasible, as determined by the Telephone Company.

The customer may provide the Network Channel Terminating Equipment associated with the High Capacity circuit at the customer's premises. The interim program for interconnection of such equipment is set forth in Technical Reference PUB AS No. 1, Issue II.

7.11.2 Technical Specifications Packages

	Package HC					
Parameter	0	1	1C	2	3	4
Error-Free Seconds		X				

A circuit with technical specifications package HC1 will be capable of an error-free second performance of 98.75% over a continuous 24 hour period as measured at the 1.544 Mbps rate through a CSU equivalent which is designed, manufactured, and maintained to conform with the specifications contained in Technical Reference GR-54-CORE, Issue 1.

Available only as a circuit of a 1.544 Mbps facility to a Telephone Company Digital Data hub or as a cross connect of two 2.4, 4.8, 9.6, 56.0 or 64.0 kbps circuits of two 1.544 Mbps facilities to a Digital Data hub(s). The customer must provide system and channel assignment data.

* DS1 and DS3 Special Access Service may be provided between service areas shown under 7.1.10, where facilities and conditions permit.

© 2022 Frontier Communications Parent, Inc. All rights reserved.

ACCESS SERVICE

7. Special Access Service (Cont'd)

7.11 High Capacity Service (Cont'd)

7.11.3 Channel Interfaces

The following channel interfaces (CIs) define the bit rates that are available for a High Capacity circuit:

CI	Bit Rate
DS-15*	1.544 Mbps (DS1)
DS-27	274.176 Mbps (DS4)
DS-31	3.152 Mbps (DSIC)
DS-44	44.736 Mbps (DS3)
DS-63	6.312 Mbps (DS2)

Compatible channel interfaces are set forth in 9.3.5 following.

7.11.4 Optional Features and Functions

(1) Automatic Loop Transfer

The Automatic Loop Transfer provides protection on a 1xN basis against failure of the facilities between a customer designated premises and the wire center serving that premises. Protection is furnished through the use of a switching arrangement that automatically switches to a spare circuit line when a working line fails. The spare circuit is not included as a part of the option. This option requires compatible equipment at both the serving wire center and the customer premises. The customer is responsible for providing the equipment at its premises. Equipment at the customer premises will be provided under tariff only if it existed in the Telephone Company inventory as of November 18, 1983.

(2) Transfer Arrangement

An arrangement that affords the customer an additional measure of flexibility in the use of their access circuit(s). The arrangement can be utilized to transfer a leg of a Special Access Service to either a spare or working circuit that terminates in either the same or a different customer designated premises. A key activated or dial-up control service is required to operate the transfer arrangement. A spare circuit, if required, is not included as part of the option.

* A 64.0 kbps circuit is available as a circuit(s) of a 1.544 Mbps facility to a Telephone Company hub.

© 2022 Frontier Communications Parent, Inc. All rights reserved.

ACCESS SERVICE

7. **Special Access Service** (Cont'd)

7.11 **High Capacity Service** (Cont'd)

7.11.4 **Optional Features and Functions** (Cont'd)

(3) Central Office Multiplexing

(a) DS4 to DS1

An arrangement that converts a 274.176 Mbps circuit to 168 DS1 circuits using digital time division multiplexing.

(b) DS3 to DS1

An arrangement that converts a 44.736 Mbps circuit to 28 DS1 circuits using digital time division multiplexing.

(c) DS2 to DS1

An arrangement that converts a 6.312 Mbps circuit to four DS1 circuits using digital time division multiplexing.

(d) DS1C to DS1

An arrangement that converts a 3.152 Mbps circuit to two DS1 circuits using digital time division multiplexing.

© 2022 Frontier Communications Parent, Inc. All rights reserved.

ACCESS SERVICE

7. **Special Access Service** (Cont'd)

7.11 **High Capacity Service** (Cont'd)

7.11.4 **Optional Features and Functions** (Cont'd)

(3) Central Office Multiplexing

(e) DS1 to Voice

An arrangement that converts a 1.544 Mbps circuit to 24 circuits for use with Voice Grade Services.

If this DS1 terminates in a DDS hub, a channel(s) of the DS1 can be used to provide DDS; however, DDS service stops at the DS1 interface.

Up to 16 channels of this DS1 can be used for Direct Digital Service (DDS-like service) with the assurance that circuit performance parameters will be met. If more than 16 channels are used for DDS-like service, the performance parameters for the DS1 and all circuits riding the DS1 will not be guaranteed.

(f) DS1 to DS0

An arrangement that converts a 1.544 Mbps circuit to twenty three (23) 64.0 Kbps circuits utilizing digital time division multiplexing.

© 2022 Frontier Communications Parent, Inc. All rights reserved.

ACCESS SERVICE

7. **Special Access Service** (Cont'd)

7.11 **High Capacity Service** (Cont'd)

7.11.4 **Optional Features and Functions** (Cont'd)

(3) Central Office Multiplexing (Cont'd)

(g) DSO to Subrate

An arrangement that converts a 64.0 kbps circuit to subspeeds of up to twenty 2.4 kbps, ten 4.8 kbps, or five 9.6 kbps circuits using digital time division multiplexing.

(4) Clear Channel Capability (CCC)

CCC provides a Bipolar with Eight Zero Substitution (B8ZS) encoding technique that allows a customer to transport 1.536 Mbps information rate signals over a 1.544 Mbps High Capacity Channel with no restraint on the quantity or sequence of one (mark) and zero (space) bits. This arrangement allows customers to derive 64 kbps clear channels. This service is provided only on 1.544 Mbps High Capacity Channels between two customer designated premises and is subject to availability of facilities. This arrangement requires the customer-provided multiplexing equipment to be compatible with the B8ZS line code as specified in Technical Reference GR- 54-CORE, Issue 1, and Technical Reference GR- 342-CORE, Issue 1.

(5) The following table shows the technical specifications packages with which the optional features and functions are available.

	Available with Technical Specifications Package HC-					
	0	1	1C	2	3	4
Automatic Loop Transfer		X				
Central Office Multiplexing:						
DS4 to DS1						X
DS3 to DS1					X	
DS2 to DS1				X		
DS1C to DS1			X			
DS1 to Voice		X				
DS1 to DS0		X				
DS0 to Subrate*	X					
Transfer Arrangement		X				
Clear Channel Capability		X				

* Available only on a circuit of a 1.544 Mbps facility to a Telephone Company hub.

© 2022 Frontier Communications Parent, Inc. All rights reserved.

ACCESS SERVICE

7. **Special Access Service** (Cont'd)

7.11 **High Capacity Service** (Cont'd)

7.11.5 **Rates and Charges**

(A) Circuit Termination - High Capacity DS1
- Per Point of Termination –
  End User - Competitive Counties
  IC CDL – All Counties

Jurisdiction	1.544 Mbps Monthly Rate	1.544 Mbps Nonrecurring Charge	
Arizona - Western	$ 4,654.06	$ 7,088.12	(C)
California	4,780.38	7,088.12	
Illinois	4,357.61	7,088.12	
Indiana	5,649.86	7,088.12	
Nevada	5,492.52	7,088.12	
N Carolina	4,253.66	7,088.12	(C)

© 2024 Frontier Communications Parent, Inc. All rights reserved.

ACCESS SERVICE

7. **Special Access Service** (Cont'd)

7.11 **High Capacity Service** (Cont'd)

7.11.5 **Rates and Charges**

(B) **RESERVED FOR FUTURE USE**

© 2022 Frontier Communications Parent, Inc. All rights reserved.

ACCESS SERVICE

7. **Special Access Service** (Cont'd)

7.11 **High Capacity Service** (Cont'd)

7.11.5 **Rates and Charges** (Cont'd)

(B) Circuit Termination - High Capacity DS1 Term Payment Plan#
- Per Point of Termination –
End User - Competitive Counties
IC CDL – All Counties

Jurisdiction	All Terms	
All States	Not Available	(C)

Service Availability is limited. Refer to # footnote on page 7-29.

© 2022 Frontier Communications Parent, Inc. All rights reserved.

ACCESS SERVICE

7. **Special Access Service** (Cont'd)

7.11 **High Capacity Service** (Cont'd)

7.11.5 **Rates and Charges** (Cont'd)

(C) Circuit Termination - High Capacity FT1 Facilities, Competitive Counties
- Per Point of Termination

	Standard Arrangement - 2 X 56 Kbps or 2 X 64 Kbps	
Jurisdiction	**Monthly Rate**	**Nonrecurring Charge**
California	$125.00	$450.00
Indiana	103.00	450.00
N Carolina	110.00	450.00

(D)

© 2022 Frontier Communications Parent, Inc. All rights reserved.

ACCESS SERVICE

7. **Special Access Service** (Cont'd)

7.11 **High Capacity Service** (Cont'd)

7.11.5 **Rates and Charges** (Cont'd)

(C) Circuit Termination - High Capacity FT1 Facilities, Competitive Counties (Cont'd)
- Per Point of Termination

	Standard Arrangement - 4 X 56 Kbps or 4 X 64 Kbps	
Jurisdiction	Monthly Rate	Nonrecurring Charge
California	$135.00	$450.00
Indiana	116.00	450.00
N Carolina	120.00	450.00

(D)

© 2022 Frontier Communications Parent, Inc. All rights reserved.

ACCESS SERVICE

7. **Special Access Service** (Cont'd)

7.11 **High Capacity Service** (Cont'd)

7.11.5 **Rates and Charges** (Cont'd)

(C) Circuit Termination - High Capacity FT1 Facilities, Competitive Counties (Cont'd)
- Per Point of Termination

	Standard Arrangement - 6 X 56 Kbps or 6 X 64 Kbps	
Jurisdiction	**Monthly Rate**	**Nonrecurring Charge**
California	$145.00	$450.00
Indiana	130.00	450.00
N Carolina	130.00	450.00

(D)

© 2022 Frontier Communications Parent, Inc. All rights reserved.

ACCESS SERVICE

7. **Special Access Service** (Cont'd)

7.11 **High Capacity Service** (Cont'd)

7.11.5 **Rates and Charges** (Cont'd)

(D) Circuit Termination - High Capacity FT1 Optional Payment Plan, Competitive Counties#
- Per Point of Termination

2 X 56 Kbps or 2 X 64 Kbps

Jurisdiction	One Year Monthly Rate	Three Year Monthly Rate	Five Year Monthly Rate
California	$120.00	$115.00	$110.00
Indiana	101.00	99.00	97.00
N Carolina	108.00	106.00	104.00

(D)

Service Availability is limited. Refer to # footnote on page 7-35.

© 2022 Frontier Communications Parent, Inc. All rights reserved.

ACCESS SERVICE

7. **Special Access Service** (Cont'd)

7.11 **High Capacity Service** (Cont'd)

7.11.5 **Rates and Charges** (Cont'd)

D.) Circuit Termination - High Capacity FT1 Optional Payment Plan, Competitive Counties# (Cont'd)
- Per Point of Termination

4 X 56 Kbps or 4 X 64 Kbps

Jurisdiction	One Year Monthly Rate	Three Year Monthly Rate	Five Year Monthly Rate
California	$130.00	$125.00	$120.00
Indiana	113.00	108.00	103.00
N Carolina	118.00	116.00	114.00

(D)

Service Availability is limited. Refer to # footnote on page 7-35.

© 2022 Frontier Communications Parent, Inc. All rights reserved.

ACCESS SERVICE

7. **Special Access Service** (Cont'd)

7.11 **High Capacity Service** (Cont'd)

7.11.5 **Rates and Charges** (Cont'd)

D.) Circuit Termination - High Capacity FT1 Optional Payment Plan, Competitive Counties # (Cont'd)
- Per Point of Termination

6 X 56 Kbps or 6 X 64 Kbps

Jurisdiction	One Year Monthly Rate	Three Year Monthly Rate	Five Year Monthly Rate
California	$140.00	$135.00	$130.00
Indiana	125.00	120.00	115.00
N Carolina	128.00	126.00	124.00

(D)

Service Availability is limited. Refer to # footnote on page 7-35.

© 2022 Frontier Communications Parent, Inc. All rights reserved.

ACCESS SERVICE

7. **Special Access Service** (Cont'd)

7.11 **High Capacity Service** (Cont'd)

7.11.5 **Rates and Charges** (Cont'd)

(E) Circuit Termination - High Capacity DS3
- Per Point of Termination –
End User - Competitive Counties
IC CDL – All Counties

(1) Individual DS3 – Non-capacity System

Jurisdiction	Nonrecurring Charge	
All States	$15,751.38	(C)

Jurisdiction	Month to Month Rate ##	One Year # Monthly Rate	
Arizona – Western - Competitive	$74,261.41	$74,261.41	
California- Competitive	74,261.41	74,261.41	
Illinois - Competitive	57,700.71	57,700.71	
Indiana - Competitive	66,913.38	66,913.38	
Nevada - Competitive	74,261.41	74,261.41	(C)
N Carolina - Competitive	69,306.02	69,306.02	

Effective November 19, 2021, DS3 Term Rates are no longer permitted. DS3 Term Rates in effect as of November 19, 2021 may continue the existing term but will not be eligible to extend, renew, reenroll in, convert to a new term period, or in any other way continue their existing plan beyond its current expiration. At expiration of the commitment term service will be converted to the Month to Month rate. If at any time an existing customer terminates its DS3 Term Rates, the customer may not re-subscribe to the rate.

Effective July 26, 2022 any DS3 Service billing at the Month to Month rate will convert to the Individual DS3 - Non-Capacity System Month to Month rate. In addition, at the expiration of a service period, any DS3 service will convert to the Individual DS3 - Non Capacity System Month to Month rate.

© 2024 Frontier Communications Parent, Inc. All rights reserved.

ACCESS SERVICE

7. **Special Access Service** (Cont'd)

7.11 **High Capacity Service** (Cont'd)

7.11.5 **Rates and Charges** (Cont'd)

(E) Circuit Termination - High Capacity DS3 (Cont'd)
- Per Point of Termination –
  End User - Competitive Counties
  IC CDL – All Counties

(1) Individual DS3 – Non-capacity System ## (C)

Jurisdiction	Three Year # Monthly Rate	Five Year # Monthly Rate	Seven Year # Monthly Rate	
Arizona – Western -Competitive	$48,340.95	$42,259.33	$39,521.75	
California - Competitive	48,340.95	39,850.96	39,521.75	
Illinois- Competitive	35,867.89	31,189.59	29,629.91	
Indiana - Competitive	41,635.59	35,727.24	33,058.96	
Nevada - Competitive	48,340.95	42,259.33	39,521.75	
N Carolina - Competitive	51,632.98	45,482.08	42,727.15	(C)

Service Offer is limited. See footnote on page 7-132

Service Offer is further limited. See Footnote on page 7-132.

© 2024 Frontier Communications Parent, Inc. All rights reserved.

ACCESS SERVICE

7. Special Access Service (Cont'd)

7.11 High Capacity Service (Cont'd)

7.11.5 Rates and Charges (Cont'd)

(E) Circuit Termination - High Capacity DS3 (Cont'd)
- Per Point of Termination

(2) Three Capacity System ## and ###
- First DS3

Jurisdiction	Nonrecurring Charge	
All States	$19,056.48	(C)

Jurisdiction	Month to Month Rate ###	One Year # Monthly Rate	
Arizona – Western - Competitive	$38,536.78	$38,536.78	
California - Competitive	38,536.78	38,536.78	
Illinois - Competitive	36,792.72	36,792.72	
Indiana - Competitive	38,503.24	38,503.24	
Nevada - Competitive	38,536.78	38,536.78	
N Carolina -Competitve	43,089.75	43,089.75	(C)

Effective July 26, 2022 any Three/Twelve Capacity DS3 Service billing at the Month to Month rate will convert to the Individual DS3 - Non-capacity System Month to Month rate. In addition, at the expiration of a service period, the Three/Twelve DS3 service will convert to the Individual DS3 - Non-capacity System Month to Month rate.

Service Availability is limited. Refer to # footnote on page 7-43.

Effective November 19, 2021, DS3 Term Rates are no longer permitted. DS3 Term Rates in effect as of November 19, 2021 may continue the existing term but will not be eligible to extend, renew, reenroll in, convert to a new term period, or in any other way continue their existing plan beyond its current expiration. At expiration of the commitment term service will be converted to the Month to Month rate. If at any time an existing customer terminates its DS3 Term Rates, the customer may not re-subscribe to the rate.

© 2024 Frontier Communications Parent, Inc. All rights reserved.

ACCESS SERVICE

7. **Special Access Service** (Cont'd)

7.11 **High Capacity Service** (Cont'd)

7.11.5 **Rates and Charges** (Cont'd)

(E) Circuit Termination - High Capacity DS3 (Cont'd)
- Per Point of Termination

(2) Three Capacity System## (Cont'd) # and ###
- First DS3

Jurisdiction	Three Year # Monthly Rate	Five Year # Monthly Rate	Seven Year # Monthly Rate	
				(C)
Arizona – Western - Competitive	$25,188.07	$22,043.76	$20,618.35	
California - Competitive	24,316.07	22,043.76	20,618.35	
Illinois - Competitive	22,577.28	21,741.16	20,068.74	
Indiana - Competitive	25,573.78	22,328.85	20,836.36	
Nevada - Competitive	25,188.07	22,043.76	20,618.35	
N Carolina - Competitive	29,632.07	26,395.52	24,936.55	(C)

Service Availability is limited. Refer to # footnote on page 7-43.

Service Offer is limited. See footnote on page 7-134

Service is further limited - See Footnote on page 7-134

© 2024 Frontier Communications Parent, Inc. All rights reserved.

ACCESS SERVICE

7. **Special Access Service** (Cont'd)

7.11 **High Capacity Service** (Cont'd)

7.11.5 **Rates and Charges** (Cont'd)

(E) Circuit Termination - High Capacity DS3 (Cont'd)
- Per Point of Termination

(3) Three Capacity System (Cont'd) ## and ###
- Each Additional DS3 - (Maximum of 2)

Jurisdiction	Nonrecurring Charge
All States	$7,622.59

(C)

Jurisdiction	Month to Month Rate ###	One Year # Monthly Rate
Arizona – Western - Competitive	$2,104.58	$2,104.58
California - Competitive	2,104.58	2,104.58
Illinois - Competitive	2,003.97	2,003.97
Indiana - Competitive	2,064.04	2,064.04
Nevada - Competitive	2,104.58	2,104.58
N Carolina - Competitive	2,263.91	2,263.91

(C)

Service Availability is limited. Refer to # footnote on page 7-43.

Service Offer is limited. See footnote on page 7-134

Service is further limited - See Footnote on page 7-134

© 2024 Frontier Communications Parent, Inc. All rights reserved.

ACCESS SERVICE

7. **Special Access Service** (Cont'd)

7.11 **High Capacity Service** (Cont'd)

7.11.5 **Rates and Charges** (Cont'd)

(E) Circuit Termination - High Capacity DS3 (Cont'd)
- Per Point of Termination

(3) Three Capacity System (Cont'd) ## and ###
- Each Additional DS3 (Maximum of 2)

Jurisdiction	Three Year # Monthly Rate	Five Year # Monthly Rate	Seven Year # Monthly Rate	
				(C)
Arizona – Western - Competitive	$1,668.57	$1,526.03	$1,458.96	
California- Competitive	1,551.20	1,526.03	1,458.96	
Illinois- Competitive	1,442.19	1,366.73	1,249.33	
Indiana- Competitive	1,442.19	1,274.51	1,199.04	
Nevada- Competitive	1,668.57	1,526.03	1,458.96	
N Carolina- Competitive	1,601.51	1,433.84	1,349.95	(C)

Service Availability is limited. Refer to footnote on page 7-43.

Service Offer is limited. See footnote on page 7-134

Service is further limited - See Footnote on page 7-134

© 2024 Frontier Communications Parent, Inc. All rights reserved.

ACCESS SERVICE

7. **Special Access Service** (Cont'd)

7.11 **High Capacity Service** (Cont'd)

7.11.5 **Rates and Charges** (Cont'd)

(E) Circuit Termination - High Capacity DS3 (Cont'd)
- Per Point of Termination

(4) Twelve Capacity System ## and ###
- First DS3

Jurisdiction	Nonrecurring Charge
All States	$34,301.65

(C)

Jurisdiction	Month to Month Rate ###	One Year # Monthly Rate
Arizona – Western - Competitive	$58,828.09	$58,828.09
California - Competitive	58,828.09	58,828.09
Illinois- Competitive	54,501.50	54,501.50
Indiana- Competitive	54,971.08	54,971.08
Nevada- Competitive	54,971.08	54,971.08
N Carolina- Competitive	67,908.89	67,908.89

(C)

Service Availability is limited. Refer to footnote on page 7-43.

Service Offer is limited. See footnote on page 7-134

Service is further limited - See Footnote on page 7-134

© 2024 Frontier Communications Parent, Inc. All rights reserved.

ACCESS SERVICE

7. **Special Access Service** (Cont'd)

7.11 **High Capacity Service** (Cont'd)

7.11.5 **Rates and Charges** (Cont'd)

(E) Circuit Termination - High Capacity DS3 (Cont'd)
- Per Point of Termination

(4) Twelve Capacity System (Cont'd) ## and ###
- First DS3

Jurisdiction	Three Year # Monthly Rate	Five Year # Monthly Rate	Seven Year # Monthly Rate	
Arizona – Western - Competitive	$43,970.15	$39,760.96	$37,782.14	(C)
California- Competitive	42,826.28	39,760.96	37,782.14	
Illinois- Competitive	42,398.90	35,995.94	33,989.50	
Indiana- Competitive	40,582.66	36,306.37	34,277.27	
Nevada- Competitive	40,582.66	36,306.37	34,277.27	
N Carolina- Competitive	52,497.53	48,036.79	45,940.58	(C)

Service Availability is limited. Refer to footnote on page 7-43.

Service Offer is limited. See footnote on page 7-134

Service is further limited - See Footnote on page 7-134

© 2024 Frontier Communications Parent, Inc. All rights reserved.

ACCESS SERVICE

7. **Special Access Service** (Cont'd)

7.11 **High Capacity Service** (Cont'd)

7.11.5 **Rates and Charges** (Cont'd)

(E) Circuit Termination - High Capacity DS3 (Cont'd)
- Per Point of Termination

(5) Twelve Capacity System ## and ###
- Each Additional DS3 (Maximum of 11)

Jurisdiction	Nonrecurring Charge	
All States	$7,622.59	(C)

Jurisdiction	Month to Month Rate ###	One Year # Monthly Rate	
Arizona – Western - Competitive	$2,104.58	$2,104.58	
California- Competitive	2,104.58	2,104.58	
Illinois- Competitive	2,431.61	2,431.61	
Indiana- Competitive	2,339.37	2,339.37	
Nevada- Competitive	2,339.37	2,339.37	
N Carolina- Competitive	2,356.14	2,356.14	(C)

Service Availability is limited. Refer to # footnote on page 7-43.

Service Offer is limited. See footnote on page 7-134

Service is further limited - See Footnote on page 7-134

© 2024 Frontier Communications Parent, Inc. All rights reserved.

ACCESS SERVICE

7. **Special Access Service** (Cont'd)

7.11 **High Capacity Service** (Cont'd)

7.11.5 **Rates and Charges** (Cont'd)

(E) Circuit Termination - High Capacity DS3 (Cont'd)
- Per Point of Termination

(5) Twelve Capacity System (Cont'd) ## and ###
- Each Additional DS3 (Maximum of 11)

Jurisdiction	Three Year # Monthly Rate	Five Year # Monthly Rate	Seven Year # Monthly Rate	
Arizona – Western - Competitive	$1,668.57	$1,526.03	$1,458.96	(C)
California- Competitive	1,668.57	1,526.03	1,458.96	
Illinois- Competitive	1,861.42	1,668.57	1,576.34	
Indiana- Competitive	1,785.97	1,601.51	1,517.67	
Nevada- Competitive	1,785.97	1,601.51	1,517.67	
N Carolina- Competitive	1,651.82	1,475.74	1,391.88	(C)

Service Availability is limited. Refer to # footnote on page 7-43.

Service Offer is limited. See footnote on page 7-134

Service is further limited - See Footnote on page 7-134

© 2024 Frontier Communications Parent, Inc. All rights reserved.

ACCESS SERVICE

7. **Special Access Service** (Cont'd)

7.11 **High Capacity Service** (Cont'd)

7.11.5 **Rates and Charges** (Cont'd)

(F) Circuit Termination - Frequency bandwidths other than 1.544 Mbps (DS1) and 44.736 Mbps (DS3)
- Per Point of Termination

Frequency bandwidths other than 1.544 Mbps:

Monthly Rates and Nonrecurring Charges for the Circuit Termination rate element of High Capacity Service for all jurisdictions of the Issuing Carriers listed on Title Page 2 and Title Page 3 will be determined on an Individual Case Basis and filed in Section 7.12 following.

Available frequency bandwidths formats are as follows:

Frequency Bandwidths
64 Kbps
3.152 Mbps
6.312 Mbps
274.176 Mbps

© 2022 Frontier Communications Parent, Inc. All rights reserved.

ACCESS SERVICE

7. **Special Access Service** (Cont'd)

7.11 **High Capacity** (Cont'd)

7.11.5 **Rates and Charges** (Cont'd)

(G) Circuit Mileage - High Capacity DS1

1.544 Mbps

Jurisdiction	Monthly Rate Fixed	Monthly Rate Per Mile	
Arizona - Western	$146.64	$67.26	(C)
California	577.91	168.55	
Illinois	247.91	77.65	
Indiana	667.08	179.87	
Nevada	535.38	171.69	
N Carolina	282.58	86.33	(C)

© 2024 Frontier Communications Parent, Inc. All rights reserved.

ACCESS SERVICE

7. **Special Access Service** (Cont'd)

7.11 **High Capacity** (Cont'd)

7.11.5 **Rates and Charges** (Cont'd)

(H)

© 2022 Frontier Communications Parent, Inc. All rights reserved.

ACCESS SERVICE

7. Special Access Service (Cont'd)

7.11 High Capacity Service (Cont'd)

7.11.5 Rates and Charges (Cont'd)

(I) Circuit Mileage - High Capacity FT1 Facilities

2 X 56 Kbps or 2 X 64 Kbps

Jurisdiction	Monthly Rate Fixed	Monthly Rate Per Mile
California	$13.00	$2.48
Indiana	13.00	2.48
N Carolina	13.00	2.48

(D)

© 2022 Frontier Communications Parent, Inc. All rights reserved.

ACCESS SERVICE

7. **Special Access Service** (Cont'd)

7.11 **High Capacity Service** (Cont'd)

7.11.5 **Rates and Charges** (Cont'd)

(I) Circuit Mileage - High Capacity FT1 Facilities (Cont'd)

4 X 56 Kbps or 4 X 64 Kbps

Jurisdiction	Monthly Rate Fixed	Monthly Rate Per Mile
California	$15.00	$2.52
Indiana	15.00	2.52
N Carolina	15.00	2.52

(D)

© 2022 Frontier Communications Parent, Inc. All rights reserved.

ACCESS SERVICE

7. **Special Access Service** (Cont'd)

7.11 **High Capacity Service** (Cont'd)

7.11.5 **Rates and Charges** (Cont'd)

(I) Circuit Mileage - High Capacity FT1 Facilities (Cont'd)

6 X 56 Kbps or 6 X 64 Kbps

Jurisdiction	Monthly Rate Fixed	Monthly Rate Per Mile
California	$17.00	$2.52
Indiana	17.00	2.52
N Carolina	17.00	2.52

(D)

© 2022 Frontier Communications Parent, Inc. All rights reserved.

ACCESS SERVICE

7. **Special Access Service** (Cont'd)

7.11 **High Capacity Service** (Cont'd)

7.11.5 **Rates and Charges** (Cont'd)

(J) DS3 Circuit Mileage

(1) Circuit Mileage - High Capacity DS3

	Monthly Rate		
Jurisdiction	**Fixed**	**Per Mile**	
			(C)
Arizona - Western	$14,625.64	$2,113.20	
California	14,039.97	1,407.39	
Illinois	3,465.30	340.86	
Indiana	8,957.95	857.51	
Nevada	14,038.88	1,954.42	
N Carolina	6,497.43	573.53	(C)

© 2024 Frontier Communications Parent, Inc. All rights reserved.

ACCESS SERVICE

7. **Special Access Service** (Cont'd)

7.11 **High Capacity Service** (Cont'd)

7.11.5 **Rates and Charges** (Cont'd)

(J)

© 2022 Frontier Communications Parent, Inc. All rights reserved.

ACCESS SERVICE

7. **Special Access Service** (Cont'd)

7.11 **High Capacity Service** (Cont'd)

7.11.5 **Rates and Charges** (Cont'd)

(J)

© 2022 Frontier Communications Parent, Inc. All rights reserved.

ACCESS SERVICE

7. **Special Access Service** (Cont'd)

7.11 **High Capacity** (Cont'd)

7.11.5 **Rates and Charges** (Cont'd)

(K) Circuit Mileage - For frequency bandwidths other than 1.544 Mbps (DS1) and 44.736 Mbps (DS3):

Fixed and Per Mile Monthly Rates for the Circuit Mileage rate element of High Capacity Service for all jurisdictions of the Issuing Carriers listed on Title Page 2 and Title Page 3 will be determined on an Individual Case Basis and filed in Section 7.12 following.

Available frequency bandwidths formats are as follows.

Frequency Bandwidths
64 Kbps
3.152 Mbps
6.312 Mbps
274.176 Mbps

© 2022 Frontier Communications Parent, Inc. All rights reserved.

ACCESS SERVICE

7. **Special Access Service** (Cont'd)

7.11 **High Capacity** (Cont'd)

7.11.5 **Rates and Charges** (Cont'd)

(L) Optional Features and Functions

Rates and charges for the Optional Features and Functions of High Capacity Service listed in this section apply to all jurisdictions of the Issuing Carriers listed on Title Page 2 and Title Page 3.

		Monthly Rates	Nonrecurring Charges	
(1)	Multiplexing			
	DS4 to DS1 - Per arrangement	ICB	None	
	DS2 to DS1 - Per arrangement	ICB	None	
	DS1C to DS1 - Per arrangement	ICB	None	
	DS1 TO DSO - Per arrangement	$4,483.15	None	(C)
	DSO to Subrates - Per arrangement			
	Up to 20 2.4 Kbps services	$2,520.22	None	
	Up to 10 4.8 kbps services	$1,890.18	$12,601.09	
	Up to 5 9.6 kbps services	$1,575.13	$12,601.09	(C)

© 2024 Frontier Communications Parent, Inc. All rights reserved.

ACCESS SERVICE

7. **Special Access Service** (Cont'd)

7.11 **High Capacity Service** (Cont'd)

7.11.5 **Rates and Charges** (Cont'd)

(L) Optional Features and Functions (Cont'd)

(1) Multiplexing (Cont'd)
DS1 to Voice Multiplexing*
- Per arrangement

Jurisdiction	Monthly Rate	Nonrecurring Charge	
Arizona - Western	$2,840.76	$12,601.09	(C)
California	2,840.76	12,601.09	
Illinois	2,339.42	12,601.09	
Indiana	2,840.76	12,601.09	
Nevada	2,840.76	12,601.09	
N Carolina	2,840.76	12,601.09	(C)

* A circuit of this DS1 to the hub can be used for Digital Data service.

© 2024 Frontier Communications Parent, Inc. All rights reserved.

ACCESS SERVICE

7. **Special Access Service** (Cont'd)

7.11 **High Capacity Service** (Cont'd)

7.11.5 **Rates and Charges** (Cont'd)

(L) Optional Features and Functions (Cont'd)

(1) Multiplexing(Cont'd)
DS3 to DS1 Multiplexing
- Per arrangement

Jurisdiction	Monthly Rate	Nonrecurring Charge	
Arizona – Western	$8,188.03	$7,088.12	(C)
California	5,320.49	7,088.12	
Illinois	2,173.22	7,088.12	
Indiana	5,997.35	7,088.12	
Nevada	7,920.57	7,088.12	
N Carolina	6,349.86	7,088.12	(C)

© 2024 Frontier Communications Parent, Inc. All rights reserved.

ACCESS SERVICE

7. **Special Access Service** (Cont'd)

7.11 **High Capacity** (Cont'd)

7.11.5 **Rates and Charges** (Cont'd)

(L) Optional Features and Functions (Cont'd)

		Monthly Rates	Nonrecurring Charges	
(2)	Automatic Loop Transfer - Per arrangement*	$100.00	None	
(3)	Transfer Arrangement (key activated** or dial up***) - Per four port arrangement including control channel termination****)	165.00	None	
(4)	Clear Channel Capability - Per DS1 circuit arranged	None	$12,601.09	(C)

* An additional Circuit Termination charge will apply whenever the spare line is provided as a leg to the customer premises.

** The key activated control circuit is rated as a Metallic Circuit Termination .
The Dial-up option requires the customer to purchase the Controller Arrangement from 13.3.8 following.

*** An additional Circuit Termination charge will apply whenever a spare circuit is configured as a leg to the customers premises. Additional circuit mileage charges will also apply when the transfer arrangement is not located in the

**** customer premises serving wire center.

© 2024 Frontier Communications Parent, Inc. All rights reserved.

ACCESS SERVICE

7. **Special Access Service** (Cont'd)

7.11 **High Capacity Service** (Cont'd)

7.11.5 **Rates and Charges** (Cont'd)

(M) Special Access Cross Connect

Per DS0, DS1 or DS3 Connection

State	DS0 Monthly Rate	DS1 Monthly Rate	DS3 Monthly Rate
California	$3.05	$8.69	$75.63
Illinois	1.77	4.53	36.64

(D)

*DS0 Cross Connect rates for Fractional T1 will be assessed as follows:

- 128 Kbps: 2 DS0 Cross Connects
- 256 Kbps: 4 DS0 Cross Connects
- 384 Kbps: 6 DS0 Cross Connects

© 2022 Frontier Communications Parent, Inc. All rights reserved.

ACCESS SERVICE

7. **Special Access Service** (Cont'd)

7.12 **Individual Case Filing**

Rates and charges for Special Access Service provided on an individual case basis are filed following:

Customer Name	Description and Location	MTL/NRC MRC	Termination Liability Period
AT&T ID#CA0105316	Provide point-to-point OC3c service from the end user location at 15A 17th Street, Barstow, CA. to the meet point with former GTE.		50% of all remaining monthly payments.
	OC3c point-to-point CDL link	MTL: $ MRC: $ 3,570 NRC $ 6,000	
	OC3c Dedicated Transport, per mile	MRC: $ 295	

© 2022 Frontier Communications Parent, Inc. All rights reserved.

ACCESS SERVICE

7. **Special Access Service** (Cont'd)

7.12 **Individual Case Filing** (Cont'd)

Rates and charges for Special Access Service provided on an individual case basis are filed following:

Customer Name	Description and Location	MTL/NRC MRC	Termination Liability Period
Envirex, Inc ID# IN94120E	Provide High Capacity Digital FT1 Facilities (2X64 Kbps) between the customer location At 2753 Michigan Rd., Madison, Indiana and AT&T's location in Columbus, Indiana.	MTL: $6,048 NRC: $ 700 MRC: $ 504	1 Year beginning January 6, 1995. Reduces 1/12 for each month in service.
Dukenet Communications ID#NC0201277	Provide OC3c CDL Optical Cross Connect with OC3c Dedicated Transport from the Sylva Central Office located at 84 Allen St., Sylva, NC to the Bell South meet point in Waynesville, NC.		1 Year beginning August 8, 2002. Reduces 50% of all remaining monthly payments.
	OC3c CDL with Optical Cross Connect.	MTL: $ ------ NRC: $ 1,000 MRC: $ 715	
	OC3c Dedicated Transport per mile.	MRC: $ 170	

© 2022 Frontier Communications Parent, Inc. All rights reserved.

ACCESS SERVICE

7. **Special Access Service** (Cont'd)

7.12 **Individual Case Filing** (Cont'd)

Rates and charges for Special Access Service provided on an individual case basis are filed following:

Customer Name	Description and Location	MTL/NRC MRC	Termination Liability Period

© 2022 Frontier Communications Parent, Inc. All rights reserved.

ACCESS SERVICE

7. **Special Access Service** (Cont'd)

7.12 **Individual Case Filing** (Cont'd)

Rates and charges for Special Access Service provided on an individual case basis are filed following:

Customer Name	Description and Location	MTL/NRC MRC	Termination/Liability Period
GTE Telecom ID# IN9601083	Provide OC24 interoffice disaster recovery ring with a node at the Greensburg CO, 211 E. North St., Greensburg, IN.	MTL: $ 196,974 NRC: $ 0 MRC: $ 6,237	5 Years beginning January 4, 1997. Reduces 1/60 for each month in service.
	•		
	• OC12 CO Node	MTL: $ NRC: $ 6,000 MRC: $ 2,250	
	• OC12 Dedicated Transport	MTL : $ NRC: $ 3,000 MRC: $ 2,025	
	• DS1 Rider • DS3 Rider • OC3c Rider	MTL: $ NRC: $ 0 MRC: $ 26,660	
Fidalgo ID# WA0101713 (	Provide OC3 SONET service from the CDL at 1725 Continental Pl, Mt. Vernon, WA to the Mt. Vernon CO, WA • OC3 CO Node • OC3 Single Route CDL Link • DS1 Rider • DS3 Rider	MRC $ 75 MC: $ 250 MRC: $ 750 MTL: $ 75,600 NRC: $ 0 MRC: $ 800 MRC: $ 900 MRC: $ 75 MRC: $ 250	7 Years beginning November 30, 2001. Reduce 1/84 for each month in service

© 2022 Frontier Communications Parent, Inc. All rights reserved.

ACCESS SERVICE

7. **Special Access Service** (Cont'd)

7.12 **Individual Case Filing** (Cont'd)

Rates and charges for Special Access Service provided on an individual case basis are filed following:

Customer Name	Description and Location	MTL/NRC MRC	Termination Liability Period
Bently Nevada ID# NV9801000	Provide one (1) 64K DDS Service between 1617 Water Street, Minden, NV and a meet point with Nevada Bell	MTL: $ 0 NRC: $ 250 MRC: $ 152	
		PER SERVICE	
TBC Group ID# IL9901152	Provide three (3) 256K Frame Relay Services between the CDL at 302 Willow, Maple Park, IL and the C.O. at 304 Elm, Maple Park, IL, the CDL at 407 W. State, Sycamore, IL and the C.O. at 112 W. Elm, Sycamore, IL and the CDL at 513 W. Main, Kirkland, IL and the C.O. at 402 W. South, Kirkland, IL.	MTL: $ 300 NRC: $ 395 MRC: $ 250	1 Year beginning August 28, 1999. Reduces 1/12 for each month in service

© 2022 Frontier Communications Parent, Inc. All rights reserved.

ACCESS SERVICE

7. **Special Access Service** (Cont'd)

7.12 **Individual Case Filing** (Cont'd)

Rates and charges for Special Access Service provided on an individual case basis are filed following:

Customer Name	Description and Location	MTL/NRC MRC	Termination Liability Period
AT&T Wireless ID# CA9903392	Provide customer Network Control (CNC) for connection to customer's Telephone Company provided DS1 and DS3 services.		3 Years beginning January 14, 2000

Rate Elements	NRC	Three Year MRC
CNC Controller Connect	$0	$1,300.00
DS3 Port Control-Per DS3 Port	0	98.00
DS1 Port Control-Per DS1 Port	0	14.00

In addition to the applicable conditions set forth elsewhere in this Guide, the following conditions shall apply to this service:

(a) The tariff rates for DS3 and DS1 services apply in addition to the rate elements above.

(b) Termination liability charges include charges for the individual service elements shown above. The termination liability for subsequent installation begin on the date of installation. In the event the customer discontinues one or all of the service elements prior to the end of the Termination Liability Period, the customer shall pay 50% of all remaining monthly charges for the service element involved.

(c) Termination liability charges, when applicable, are due in full within thirty (30) days of the date of termination of the service.

(d) Should a general tariff offering for this service become available prior to the end of the Termination Liability Period set forth above, and the customer elects to convert to the general tariff rates, no termination liability charges will apply. The customer will be required to convert to the general tariff rates at the end of one year from the effective date of the general tariff, or discontinue the service without liability.

© 2022 Frontier Communications Parent, Inc. All rights reserved.

ACCESS SERVICE

7. **Special Access Service** (Cont'd)

7.12 **Individual Case Filing** (Cont'd)

Rates and charges for Special Access Service provided on an individual case basis are filed following:

Customer Name	Description and Location	MTL/NRC MRC	Termination Liability Period

© 2022 Frontier Communications Parent, Inc. All rights reserved.

ACCESS SERVICE

7. SPECIAL ACCESS (Cont'd)

7.13 High Voltage Protection

7.13.1 Description

High Voltage Protection is used at customer locations that may require special equipment to isolate or neutralize Ground Potential Rise (GPR) and/or induced voltage caused by faults in the electric power system. GPR is a voltage difference between two or more ground electrodes caused by earth return currents. GPR on cable facilities can occur, for example, when current from lightning surges flow to ground, but GPR often is associated with voltage generated as the power system fault currents flow to ground. Maximum GPR is developed by the percentage of line-to-ground fault current entering earth through electrode impedance.

This feature will provide high voltage isolation for Special Access telecommunications, while enabling the normal transmission between the Telephone Company wire center and the equipment at the customer's location during GPR environment due to electrical power faults.

7.13.2 Provisioning

The Telephone Company shall determine the proper levels of protection required on its network to isolate or neutralize electrical hazard, based on the information provided by the customer. The customer shall provide the Telephone Company, in writing, the technical data necessary for the Telephone Company to determine the high voltage protection requirements, at the time of application for the initial service, additions to, or changes in the existing service. In addition, the customer shall notify the Telephone Company before making changes in the electric supply that will increase the GPR at the location.

The technical data for the customer's location shall include, but not be limited to, the following:

- ground grid area in square feet
- ground gird impedance in ohms
- X/R ratios at worst case fault location
- GPR in volts MS

© 2022 Frontier Communications Parent, Inc. All rights reserved.

ACCESS SERVICE

7. SPECIAL ACCESS (Cont'd)

7.13 High Voltage Protection (Cont'd)

7.13.2 Provisioning (Cont'd)

Based on the customer's technical data provided to the Telephone Company, the Telephone Company will provide the necessary high voltage protection equipment at the Telephone Company's demarcation point on the customer's premises and at the remote drainage location. The placement of the equipment by the Telephone Company shall in no way release the customer of its responsibility for damage, loss or claims caused by electrical hazards resulting from the customer's electric power system. The Telephone Company's liability for damage, loss or claims is set forth under 2.3.1.

The customer may elect to furnish the equipment at its premises to isolate or neutralize the electrical hazard subject to the approval of the Telephone Company; however, such approval by the Telephone Company shall not relieve the customer of its responsibility to install or maintain adequate high voltage equipment. The high voltage protection equipment at the customer's location will be exclusively owned either by the Telephone Company or by the customer.

When the customer provides the high voltage equipment at its premise, the Telephone Company will provide the necessary high voltage equipment at the wire center and remote drainage location. The Telephone Company will be responsible up to and including the network interface for the termination of Special Access Services regardless of ownership of the high voltage protection equipment.

The Telephone Company will inspect and verify adequacy of the high voltage protection equipment when service is established and at such future times as deemed necessary due to additions, deletions, rearrangements, routine maintenance or for the purpose of verifying the adequacy of the high voltage protection equipment.

7.13.3 Claims and Demands for Damage

In addition to the provisions in Section 2.3.8, the customer shall defend, indemnify and save harmless the Telephone Company from any and all loss, claims, demands, suits or other action or any liability whatsoever, whether suffered, made, instituted or asserted by the customer or by any other party or person, for any personal injury to or death of any person or persons, or for any loss, damage or destruction of any property whether owned by the customer or others, caused or claimed to have been caused directly or indirectly by the installation, operation, failure to operate, maintenance, removal, presence, condition, location or use of such equipment and services associated with high voltage protection equipment furnished by the Telephone Company or with customer equipment when combined or connected with facilities of the Telephone Company.

Services provided by the Telephone Company shall not cause the Telephone Company to become responsible for damage, loss or claims caused by electrical hazards resulting from a customer's electric power system.

© 2022 Frontier Communications Parent, Inc. All rights reserved.

ACCESS SERVICE

7. SPECIAL ACCESS (Cont'd)

7.13 High Voltage Protection (Cont'd)

7.13.4 Network Outage

Interruptions or outages of services provided to customers may occur for reasons, such as facility damage due to storm loading, vehicle accident, lightning strike, or other acts of God. Circuit failures caused by such events cannot be prevented by services provided in accordance with this service (however, interruptions and service outages due to fault-produced ground potential rise and induction can be minimized). The Telephone Company expressly states that provision of the high voltage equipment cannot prevent such service outages as may normally occur due to the proceeding circumstances. It is the responsibility of the customer to provide sufficient protection to prevent damage caused by such events.

Interruptions or outages due to the effects (GPR and/or induction) of faults in the customer's power generating, transmission and/or distribution system are minimized through the installation and maintenance of high voltage protection equipment which is designed to operate in a fault-produced electrical environment.

7.13.5 Compliance Statement

If the Telephone Company has provided service where high voltage protection is necessary, by the customer or the customer-provided equipment is nonfunctional or inadequate or the customer fails, upon written notice, to establish or reestablish the required high voltage protection equipment or apply for and obtain such protection from the Telephone Company, or keep the Telephone Company informed of changed high voltage requirements, then the Telephone Company will disconnect service 120 days after giving the notice required, as set forth under Section 2.1.8(A).

7.13.6 Rate Regulations

(A) Minimum Period

The minimum period for High Voltage Protection is one month.

(B) Rate Elements

(1) Initial Common Equipment

A nonrecurring charge and a monthly rate apply for the Initial Common (basic) Equipment used for the physical connection to the network interface. The Initial Common Equipment can accommodate up to eight Special Access facility terminations at a customer's location.

(2) High Voltage Terminating Equipment

High Voltage Terminating Equipment is required for each Special Access facility termination. A nonrecurring charge and a monthly rate for the High Voltage Terminating Equipment apply in addition to the rates and charges for the Special Access facility as well as the associated Special Access Service regulations.

© 2022 Frontier Communications Parent, Inc. All rights reserved.

ACCESS SERVICE

7. **SPECIAL ACCESS** (Cont'd)

7.13 **High Voltage Protection** (Cont'd)

7.13.7 **Rates and Charges**

	Initial Common Equipment		Terminating Equipment, Per Circuit Terminated	
	Nonrecurring Charge	Monthly Rate	Nonrecurring Charge	Monthly Rate
Jurisdiction*				
Arizona – Western	$500.00	$108.22	$50.00	$28.81
California	500.00	108.22	50.00	28.81
Indiana	500.00	108.22	50.00	28.81
North Carolina	500.00	108.22	50.00	28.81

(D)

* Rates are for Competitive Counties

© 2022 Frontier Communications Parent, Inc. All rights reserved.

ACCESS SERVICE

7. SPECIAL ACCESS (Cont'd)

7.14 LAN Extension Service #

7.14.1 General

LAN (Local Area Network) Extension Service (LES) provides fiber transport connectivity between two customer designated locations (one of which must be a service provider's point of presence with the other being one of the service provider's end user) or between a customer designated premises and Expanded Interconnection Service (EIS) arrangement as set forth in Section 17.

LES is a point-to-point service, offered with a 10Mbps, 100Mbps, 1Gbps Ethernet or 1 Gbps Extended Distance interface connection, available where facilities and conditions permit. Where suitable facilities and conditions are not available to provide LES, facilities may be specially constructed subject to the provisions set forth in 2.1.4, Provision of Services, and 5.1.8, Selection of Facilities, preceding.

7.14 2 Service Description

LES is provisioned over two dedicated fiber strands between the customer designated locations involved where service is delivered over the network interface specified by the customer. The LES network interface converts the optical signal to an electrical Ethernet signal at speeds of 10 Mbps, or 100 Mbps. The 1 Gbps network interface enables LES to be delivered as an optical signal.

When LES is delivered to an EIS arrangement, service will be cross-connected to the EIS arrangement as described in Section 17, following. The provision of LES at 100Mbps, 1Gbps or 1Gbps Extended Distance may include the use of dense wave division multiplexing technology, where available.

The Telephone Company's equipment at the customer's designated premises must be on conditioned power circuits (surge protected); the Telephone Company recommends an uninterrupted power supply (UPS).

No credit allowance for a service interruption is provided with LES.

Service intervals for LES are specified in Section 5.1.7, preceding.

Effective May 31, 2007, orders for new LES are no longer permitted. The Telephone Company will continue to provide LES pursuant to this Section 7.14 on any existing LES that is in-service as of May 31, 2007, or any order for LES that is placed with the Telephone Company prior to May 31, 2007 (collectively, Existing LES), subject to the following conditions:

a. For any Existing LES that is currently subscribed to a term plan (i.e., commitment periods of 3-, and 5-years), the Telephone Company will continue to provide the Existing LES for an additional six (6) months beyond the expiration date of the customer's current commitment period, or until the customer replaces the Existing LES with a comparable Telephone Company provided service, or discontinues service, whichever comes first. Moves, additions and/or changes are not permitted.
b. For any Existing LES whose term plan expired prior to May 31, 2007, but the Existing LES continued on a month-to-month basis at prevailing rates, the Telephone Company will continue to provide the Existing LES until November 30, 2007, or until the customer replaces the Existing LES with a comparable Telephone Company provided service, or discontinues service, whichever comes first. Moves, additions and/or changes are not permitted.

© 2022 Frontier Communications Parent, Inc. All rights reserved.

ACCESS SERVICE

7. **SPECIAL ACCESS** (Cont'd)

7.14 **LAN Extension Service #**(Cont'd)

7.14.3 **Technical Specifications Package**

LES requires the use of single node, fiber optic facilities that meet the following specifications:

1310nm with a loss of 20dB or less for 10Mbps Ethernet
1310nm with a loss of 26dB or less for 100Mbps Ethernet
1310nm with a loss of 18dB or less for 1Gbps Ethernet
1550nm with a loss of 26dB or less for 1Gbps Ethernet (extended distance)

The dB loss is measured to include the special transport facility when applicable and any local and intra-building fibers used in the provision of LES.

7.14.4 **Responsibilities and Rights of the Telephone Company**

The Telephone Company will provide the necessary fiber converter at the customer's designated premises to meet the interface requirements specified on the order for service.

The Telephone Company is responsible for service up to and including the network interface or fiber distributing frame, as applicable. The Telephone Company's responsibility is limited to the furnishing of communications facilities suitable for LES.

LES will not be available during those times when the Telephone Company must perform software updates and other maintenance. The Telephone Company will provide customers reasonable and timely notification to minimize impacts to the customer's service. The Telephone Company reserves the right to temporarily interrupt LES at other times in emergency situations.

All other general regulations pertaining to the responsibilities and rights of the Telephone Company as specified in Section 2, preceding also apply.

Service availability limited. Refer to # footnote on Page 7-168.

© 2022 Frontier Communications Parent, Inc. All rights reserved.

ACCESS SERVICE

7. SPECIAL ACCESS (Cont'd)

7.14 LAN Extension Service #(Cont'd)

7.14.5 Responsibilities of the Customer

The customer is responsible for all wiring and connections of its local area network to the customer side of the network interface or fiber distributing frame, as applicable.

The LES customer is responsible for the installation, operation and maintenance of any customer provided equipment.

The customer must provide a protected path for all network fibers on private property, sufficient AC or DC power to network interface equipment, access to all sites as needed by the Telephone Company personnel to perform services and a secure environment for the network equipment.

The customer must provide a relay rack or wall space for mounting of the network interface device.

The customer must provide connecting facility assignment (CFA) which LES will be cross connected to its Expanded Interconnection Service.

The customer is responsible for any damage to the Company's network equipment resulting from problems with power provided by the customer at its locations. With the exception of connecting customer provided equipment to the network interface device, the customer may not attempt to modify, adjust or otherwise change Telephone Company owned facilities or network equipment used in the provision of service. The Telephone Company reserves the right to discontinue the provision of LES to a customer who tampers with Telephone Company owned equipment and/or facilities.

The Telephone Company does not monitor the LES circuit. The customer may perform its own monitoring using surveillance equipment within its own network.

7.14 6 Rate Regulations

(A) The rates and charges for LES apply as Circuit Termination, Circuit Mileage and Cross Connect. The LES Circuit Termination provides the transmission path to connect a customer designated premises or Expanded Interconnection arrangement to the associated serving wire center. Included as part of the LES Circuit Termination is a converter interface arrangement which defines the technical characteristics and transmission rate of the service. LES Circuit Termination apply as a monthly recurring rate and nonrecurring charge for each Circuit Termination provided. LES Circuit Mileage applies as a recurring monthly charge for the airline distance between the serving wire centers associated with the locations involved. LES Cross-Connect rates and charges apply as set forth in Section 19.2.

Service availability limited. Refer to # footnote on Page 7-168.

© 2022 Frontier Communications Parent, Inc. All rights reserved.

ACCESS SERVICE

7. **SPECIAL ACCESS** (Cont'd)

7.14 **LAN Extension Service** #(Cont'd)

7.14.6 **Rate Regulations** (Cont'd)

(B) LES Term Plans

(1) LES is provided with a term plan of 3 or 5 years at rates set forth in Section 7.14.7, following. The customer must specify the term plan selected in its order for service. The LES Cross Connect rate element associated with terminating LES at an Expanded Interconnection Service arrangement are provided on a month-to-month basis and will not be included in the term plan for the associated service.

(2) At any time during the term commitment period, the customer may replace LES with LES of a higher transmission rate without incurring termination liability on the LES being replaced, provided that the term plan of the replacing LES is equal to, or greater than, the term commitment period of the plan being replaced.

(3) At any time during the term commitment period, the customer may convert to a new LES term plan of the same or different term commitment, subject to the following:

(a) No time-in-service credit will be granted for the period of time the replaced term commitment period was in effect.

(b) Termination liability will not apply to the plan being replaced, provided that the term commitment period of the replacing plan is equal to or longer than the term commitment period being replaced.

(4) All rate elements associated with LES must be under the same term plan with the same term commitment period.

(5) At expiration of the term commitment period, the prevailing rates for the current plan will continue until the customer cancels service or requests a new term plan.

(6) If service is disconnected in whole or in part prior to the end of the selected term commitment period, termination liability equal to the applicable monthly rate for the service multiplied by the number of months remaining in the unexpired portion of the term plan will apply. Minimum period charges as set forth in Section 5.3.3, preceding, may also apply.

(7) Reserved for Future Use (C).

Service availability limited. Refer to # footnote on Page 7-168.

© 2024 Frontier Communications Parent, Inc. All rights reserved.

ACCESS SERVICE

7. **SPECIAL ACCESS** (Cont'd)

7.14 **LAN Extension Service** #(Cont'd)

7.14.6 **Rate Regulations** (Cont'd)

(C) Cancellation of a LES order in whole or in part prior to the establishment of service is subject to the cancellation charges set forth in Section 5.3.2, preceding.

(D) A move in the point of termination of LES is subject to the regulations set forth in Section 7.2.1(D)(4)(B), preceding.

(E) The minimum period for LES is three years. LES Special Access Lines and LES Special Transport are subject to a three year minimum period.

Service availability limited. Refer to # footnote on Page 7-168.

© 2022 Frontier Communications Parent, Inc. All rights reserved.

ACCESS SERVICE

7. **SPECIAL ACCESS** (Cont'd)

7.14 **LAN Extension Service** #(Cont'd)

7.14.7 **Rates and Charges**

(A) LES 10 Mbps Special Access Line, Each

	3 Year Term Plan		5 Year Term Plan	
	Nonrecurring Charge	Monthly Rate	Nonrecurring Charge	Monthly Rate
Jurisdiction				
Arizona	$1300.00	$700.00	$1300.00	$650.00
California	1300.00	700.00	1300.00	650.00
Illinois	1300.00	700.00	1300.00	650.00
Indiana	1300.00	700.00	1300.00	650.00
North Carolina	1300.00	700.00	1300.00	650.00
Nevada	1300.00	700.00	1300.00	650.00

(D)

(B) LES 10 Mbps Transport, Per Airline Mile

	Monthly Rate	
	3 Year Term Plan	5 Year Term Plan
Jurisdiction		
Arizona	$88.00	$81.00
California	88.00	81.00
Illinois	88.00	81.00
Indiana	88.00	81.00
North Carolina	88.00	81.00
Nevada	88.00	81.00

(D)

Service availability limited. Refer to # footnote on Page 7-168.

© 2022 Frontier Communications Parent, Inc. All rights reserved.

ACCESS SERVICE

7. SPECIAL ACCESS (Cont'd)

7.14 LAN Extension Service #(Cont'd)

7.14.7 Rates and Charges

(C) LES 100 Mbps Special Access Line, Each

Plan	3 Year Term Plan		5 Year Term	
	Nonrecurring Monthly Charge	Monthly Rate	Nonrecurring Charge	Rate
Jurisdiction				
Arizona	1300.00	1450.00	1300.00	1400.00
California	1300.00	1450.00	1300.00	1400.00
Illinois	1300.00	1450.00	1300.00	1400.00
Indiana	1300.00	1450.00	1300.00	1400.00
North Carolina	1300.00	1450.00	1300.00	1400.00
Nevada	1300.00	1450.00	1300.00	1400.00

(D)

(D) LES 100 Mbps Transport, Per Airline Mile

	Monthly Rate	
	3 Year Term Plan	5 Year Term Plan
Jurisdiction		
Arizona	$108.00	$101.00
California	108.00	101.00
Illinois	108.00	101.00
Indiana	108.00	101.00
North Carolina	108.00	101.00
Nevada	108.00	101.00

(D)

Service availability limited. Refer to # footnote on Page 7-168.

© 2022 Frontier Communications Parent, Inc. All rights reserved.

ACCESS SERVICE

7. SPECIAL ACCESS (Cont'd)

7.14 LAN Extension Service# (Cont'd)

7.14.7 Rates and Charges

(E) LES 1 Gbps Special Access Line, Each

	3 Year Term Plan		5 Year Term Plan	
	Nonrecurring Charge	Monthly Rate	Nonrecurring Charge	Monthly Rate
Jurisdiction				
Arizona	$1300.00	$2150.00	$1300.00	$2050.00
California	1300.00	2150.00	1300.00	2050.00
Illinois	1300.00	2150.00	1300.00	2050.00
Indiana	1300.00	2150.00	1300.00	2050.00
North Carolina	1300.00	2150.00	1300.00	2050.00
Nevada	1300.00	2150.00	1300.00	2050.00

(D)

(F) LES 1 Gbps Transport, Per Airline Mile

	Monthly Rate	
	3 Year Term Plan	5 Year Term Plan
Jurisdiction		
Arizona	$128.00	$121.00
California	128.00	121.00
Illinois	128.00	121.00
Indiana	128.00	121.00
North Carolina	128.00	121.00
Nevada	128.00	121.00

(D)

Service availability limited. Refer to # footnote on Page 7-168.

© 2022 Frontier Communications Parent, Inc. All rights reserved.

ACCESS SERVICE

7. SPECIAL ACCESS (Cont'd)

7.15 Bonded Digital Link Service

7.15.1 Description

Bonded Digital Link Service provides connecting channels for the transmission of voice or data between an end user's local exchange service terminating at a digital cross connect facility and special access service provided by the Telephone Company within the same wire center or at another wire center within the same LATA.

Bonded Digital Link Service is comprised of Intra-office channels (channels within a single wire center) or Inter-office channels (channels between two wire centers) connecting the wire centers of the locations involved. The minimum transmission rate for the service is 64 kbps in a DSO channel. The Telephone Company will provide for the transmission of DS0 channels within a DS1 signal of the customer's (the end user) associated local exchange service from the digital cross connect facility in the customer's serving wire center to a 64 kbps channel of a customer's DS1 to Digital central office multiplexing arrangement within the same wire center or in a different wire center. The total number of DS0s on a Bonded Digital Link Service channel may not exceed the total capacity of the DS1 or equivalent service to which it is connected.

At the customer's option, the Telephone Company will bond contiguous DS0 channels in order to provide higher data rates. The following data rates are available:

- 64 kbps; 1 DS0 equivalent channel
- 128 kbps; 2 DSO equivalent channel
- 256 kbps; 4 bonded equivalent DS0s
- 384kbps; 6 bonded equivalent DS0s
- 512 kbps; 8 bonded equivalent DS0s
- 768 kbps; 12 bonded equivalent DS0s

For the transmission of the Bonded Digital Link channels, the Telephone Company assumes responsibility for the routing of the customer's DS0 and bonded DS0 circuits over the Telephone Company's interoffice network in order to maximize network efficiencies and to optimize economic efficiencies.

7.15.2 Terms and Conditions

(1) Bonded Digital Link Service is available within or between wire centers where suitable digital cross-connect technology exists to perform DS1 to DS0 multiplexing functions. Those locations (wire centers) are set forth in NATIONAL EXCHANGE CARRIER ASSOCIATION, INC. TARIFF FCC NO. 4.

(2) The service may only be used for connection from a wire center with a digital hubbing arrangement to a DS1 special access service capable of assignment to compatible DS0 channels. The customer or its authorized representatives must designate the DS0 channels on the special access service connected to this service. Data rates above 64 kbps require contiguous DS0 channel assignments. Connection to services other than special access service is prohibited.

© 2022 Frontier Communications Parent, Inc. All rights reserved.

ACCESS SERVICE

7. SPECIAL ACCESS (Cont'd)

7.15 Bonded Digital Link Service (Cont'd)

7.15.2 Terms and Conditions (Cont'd)

(3) Bonded Digital Link Service is provided with a one-year minimum service period. If service is disconnected prior to satisfying the minimum service period (i.e., within the first twelve months), minimum period charges apply. The minimum one-year period and minimum period charges do not apply if the rates have increased during the one-year period. The minimum period charge is equal to 100 % of the monthly rate from the date of disconnection through the balance of the first twelve months of service.

(4) This service is used for connectivity within or between wire centers. The rates and charges for Bonded Digital Link Service apply as a flat rate per DS0 equivalent channel.

(5) Credit for an interruption of Bonded Digital Link Service is subject to the basic credit allowance set forth for Special Access services as set forth in Section 2.7.1.1 preceding.

(6) Bonded Digital Link Service is provided according to service date intervals as set forth in Section 5.1.7 preceding.

(7) The rates and charges for Bonded Digital Link Service apply per DS0 equivalent channel (64 kbps). The customer is assessed either an Intra-office or an Inter-office Channel Charge for each DS0.

7.15.3 Rates and Charges

	Monthly Rates
Intra-office Channel - Per DS0	
Indiana	$3.00
Inter-office Channel - Per DS0	
Indiana	$7.00

© 2022 Frontier Communications Parent, Inc. All rights reserved.

ACCESS SERVICE

8. Miscellaneous Services

In this section normally scheduled working hours shall mean the Business. Basic Time is that time during the Business Day. Overtime is that time outside the Business day and all day Saturday. Premium Time is that time , all day on Sunday and Telephone Company observed holidays.

A call-out of a Telephone Company employee at a time not consecutive with Business Day is subject to a minimum charge of four hours.

8.1 Additional Engineering

Additional Engineering will be provided by the Telephone Company at the request of the customer or when the Telephone Company determines that Additional Engineering is necessary to accommodate a customer's request.

Additional Engineering is provided when:

(A) A customer requests additional technical information beyond that normally included by the Telephone Company on the Design Layout Report (DLR) as set forth in 6.4(F) and 7.1.6.

(B) Additional engineering time is incurred by the Telephone Company to engineer a customer's specific written request for a customized service or additional engineering activities which are not normally performed in the provision of services under this Guide.

The Telephone Company will notify the customer that Additional Engineering charges, as set forth in 8.1.1 following, will apply before any additional engineering is undertaken. When it is required, the customer will be so notified and will be furnished with a written statement setting forth the justification for the Additional Engineering as well as an estimate of the charges. If the customer agrees to the Additional Engineering, a firm order will be established. If the customer does not want the service or facilities after being notified that Additional Engineering of Telephone Company facilities is required, the order will be withdrawn and no charges will apply. Once a firm order has been established, the total charge to the customer for the Additional Engineering may not exceed the estimated amount by more than 10%.

© 2022 Frontier Communications Parent, Inc. All rights reserved.

ACCESS SERVICE

8. **Miscellaneous Services** (Cont'd)

8.1 **Additional Engineering** (Cont'd)

8.1.1 **Charges for Additional Engineering**

The charges for Additional Engineering are as follows:

Per Engineer, Per Half Hour, or Fraction Thereof

Jurisdiction	Basic Time	Overtime	Premium Time*
Arizona - Western	150.00	200.00	250.00
California	150.00	200.00	250.00
Illinois	150.00	200.00	250.00
Indiana	150.00	200.00	250.00
Nevada	150.00	200.00	250.00
N Carolina	150.00	200.00	250.00

(D)

© 2022 Frontier Communications Parent, Inc. All rights reserved.

ACCESS SERVICE

8. **Miscellaneous Services** (Cont'd)

8.2 **Additional Labor**

Additional labor is that labor requested and authorized by the customer on a given service and agreed to by the Telephone Company as set forth in 8.2.1 through 8.2.5 following. The Telephone Company will notify the customer that additional labor charges as set forth in 8.2.6 following will apply before any additional labor is undertaken. Charges for additional labor will apply per order submitted. (N)

Overtime Installation

8.2.1 Overtime installation is that Telephone Company installation effort performed outside the Business Day.

Overtime Repair

8.2.2 Overtime repair is that Telephone Company maintenance effort performed outside the Business Day.

Stand by

8.2.3 Stand by includes all time in excess of one-half (1/2) hour during which Telephone Company personnel stand by to make installation acceptance tests or cooperative tests with a customer on a given service.

Maintenance with Other Telephone Companies

8.2.4 Additional labor charges apply to additional maintenance or repair of facilities which connect to facilities of other telephone companies. This is in addition to the normal efforts required to maintain or repair facilities provided solely by the Telephone Company, as set forth in 2.1.1(C).

Other Labor

8.2.5 Other labor is that additional labor not included in 8.2.1 through 8.2.4 preceding. This includes labor incurred to accommodate a specified customer request that involves only labor which is not covered by any other section of this Guide.

© 2022 Frontier Communications Parent, Inc. All rights reserved.

ACCESS SERVICE

8. **Miscellaneous Services** (Cont'd)

8.2 **Additional Labor** (Cont'd)

8.2.6 **Charges for Additional Labor**

The charges for additional labor are as follows:

Per Technician, Per Half Hour, or Fraction Thereof
Maintenance with Other Telephone Companies, Other Labor, and Maintenance of Service Charge (See Sections 8.2.4, 8.2.5, and 8.3(C))

Jurisdiction	Basic Time	Overtime*	Premium Time*
Arizona - Western	150.00	200.00	250.00
California	150.00	200.00	250.00
Illinois	150.00	200.00	250.00
Indiana	150.00	200.00	250.00
Nevada	150.00	200.00	250.00
N Carolina	150.00	200.00	250.00

(D)

Per Technician, Per Half Hour, or Fraction Thereof
Overtime Installation and Overtime Repair (See Sections 8.2.1 and 8.2.2).

Jurisdiction	Basic Time	Overtime*	Premium Time*
Arizona - Western	34.43	75.00	125.00
California	21.87	75.00	125.00
Illinois	18.83	75.00	125.00
Indiana	19.78	75.00	125.00
Nevada	34.43	75.00	125.00
N Carolina	24.33	75.00	125.00

(D)

* A call-out of a Telephone Company employee at a time not consecutive with the Business Day is subject to a minimum charge of four hours.

© 2022 Frontier Communications Parent, Inc. All rights reserved.

ACCESS SERVICE

8. **Miscellaneous Services** (Cont'd)

8.2 **Additional Labor** (Cont'd)

8.2.6 **Charges for Additional Labor**

The charges for additional labor are as follows:

Per Technician, Per Half Hour, or Fraction Thereof
Stand by (See Section 8.2.3)

Jurisdiction	Basic Time	Overtime*	Premium Time*
Arizona - Western	60.00	70.00	80.00
California	60.00	70.00	80.00
Illinois	60.00	70.00	80.00
Indiana	60.00	70.00	80.00
Nevada	60.00	70.00	80.00
N Carolina	60.00	70.00	80.00

(D)

* A call-out of a Telephone Company employee at a time not consecutive with the Business Day is subject to a minimum charge of four hours.

© 2022 Frontier Communications Parent, Inc. All rights reserved.

ACCESS SERVICE

8. **Miscellaneous Services** (Cont'd)

8.3 **Maintenance of Service**

(A) The customer will be responsible for reporting troubles sectionalized to Telephone Company facilities and/or equipment. When trouble cannot be clearly sectionalized to the Telephone Company facilities and/or equipment, the Telephone Company will test cooperatively or independently to assist in trouble sectionalization.

When a customer reports a trouble to the Telephone Company for clearance and no trouble is found in the Telephone Company's facilities, the customer shall be responsible for payment of a Maintenance of Service charge for the period of time from when Telephone Company personnel are dispatched to the customer's or customer's end user premises to when the work is completed. Failure of Telephone Company personnel to find trouble in Telephone Company facilities will result in no charge if the trouble is actually in those facilities, but not discovered at the time.

(B) The customer shall be responsible for payment of a Maintenance of Service charge when the Telephone Company dispatches personnel to the customer's premises, and the trouble is in equipment or communications systems provided by other than the Telephone Company or in detariffed CPE provided by the Telephone Company.

In either (A) or (B) preceding, no credit allowance will be applicable for the interruption involved if the Maintenance of Service Charge applies.

(C) The charge for Maintenance of Service are as follows:

Maintenance of Service

Periods	Per Technician
Per occurrence	The charges for Maintenance of Service are the same as those set for Additional Labor as set forth in 8.2 preceding.

© 2022 Frontier Communications Parent, Inc. All rights reserved.

ACCESS SERVICE

8. **Miscellaneous Services** (Cont'd)

8.4 **Additional Testing**

Testing Services provides for the use of a Telephone Company technician in performing specific tests authorized by the customer including additional testing of facilities which connect to facilities of other telephone companies. Testing Services offered under this section of the tariff are optional and are in addition to acceptance tests and in-service tests performed by the Telephone Company as described in 6.4 (G) and 7.1.7 preceding. Testing Services are made subject to the availability of the necessary qualified personnel and test equipment at the requested test locations.

Testing Services consist of Additional Cooperative Acceptance Testing (ACAT) which is performed during installation of Access Services and Nonscheduled Testing (NST) which is performed after acceptance of Access Services by the customer. Rates and charges for Testing Service are set forth in 8.4(C) following.

The Telephone Company will provide, upon request, documentation that lists the results of the tests performed. Trunk test failures requiring customer participation for trouble resolution will be provided to the customer on an as-occurs basis.

(A) Additional Cooperative Acceptance Testing

Rates and charges for Additional Cooperative Acceptance Testing of Special Access Services apply per technician used.

(1)

© 2022 Frontier Communications Parent, Inc. All rights reserved.

ACCESS SERVICE

8. **Miscellaneous Services** (Cont'd)

8.4 **Additional Testing** (Cont'd)

- Signal to C-Notched Noise Ratio
- Intermodulation Distortion (Nonlinear)
- Frequency Shift (Offset)
- Envelope Delay Distortion
- Dial Pulse Percent Break

(2) Special Access Service

When a customer provides a technician at its premises or at an end user's premises, with suitable test equipment to perform the requested tests, the Telephone Company may provide a technician at its office for the purpose of conducting Additional Cooperative Acceptance Testing on Voice Grade Services at the time of installation. At the customer's request, the Telephone Company may provide a technician at the customer's premises or at the end user premises: These tests may, e.g., consist of the following:

- Attenuation Distortion (i.e., frequency response)
- Intermodulation Distortion (i.e., harmonic distortion)
- Phase Jitter
- Impulse Noise
- Envelope Delay Distortion
- Echo Control
- Frequency Shift

(B) Nonscheduled Testing

Nonscheduled tests are performed by the Telephone Company "on demand." When a customer provides a technician at its premises with suitable test equipment to perform the required tests, the Telephone Company may provide a technician at its office for the purpose of conducting Nonscheduled Testing of Switched or Special Access services. At the customer's request, the Telephone Company may provide a technician at the customer's premises. Nonscheduled tests may consist of any tests, e.g., loss, noise, slope, envelope delay, which the customer may require. Rates and charges for Nonscheduled Testing apply per technician used.

© 2022 Frontier Communications Parent, Inc. All rights reserved.

ACCESS SERVICE

8. **Miscellaneous Services** (Cont'd)

8.4 **Additional Testing** (Cont'd)

(C) **Rates and Charges**

The charges for Additional Testing are as follows:

Per Technician, Per Half Hour, or Fraction Thereof

Jurisdiction	Basic Time	Overtime*	Premium Time*
Arizona - Western	150.00	200.00	250.00
California	150.00	200.00	250.00
Illinois	150.00	200.00	250.00
Indiana	150.00	200.00	250.00
Nevada	150.00	200.00	250.00
N Carolina	150.00	200.00	250.00

(D)

* A call-out of a Telephone Company employee at a time not consecutive with Business Day is subject to a minimum charge of four hours.

© 2022 Frontier Communications Parent, Inc. All rights reserved.

ACCESS SERVICE

8. **Miscellaneous Services** (Cont'd)

8.5 **Reserved**

© 2022 Frontier Communications Parent, Inc. All rights reserved.

ACCESS SERVICE

8. **Miscellaneous Services** (Cont'd)

8.5 **Reserved**

© 2022 Frontier Communications Parent, Inc. All rights reserved.

ACCESS SERVICE

8. **Miscellaneous Services** (Cont'd)

8.5 **Reserved**

© 2022 Frontier Communications Parent, Inc. All rights reserved.

ACCESS SERVICE

8. **Miscellaneous Services** (Cont'd)

8.5 **Reserved**

© 2022 Frontier Communications Parent, Inc. All rights reserved.

ACCESS SERVICE

8. **Miscellaneous Services** (Cont'd)

8.5 **Reserved**

© 2022 Frontier Communications Parent, Inc. All rights reserved.

ACCESS SERVICE

8. **Miscellaneous Services** (Cont'd)

8.5 **Reserved**

© 2022 Frontier Communications Parent, Inc. All rights reserved.

ACCESS SERVICE

8. **Miscellaneous Services** (Cont'd)

8.5 **Reserved**

© 2022 Frontier Communications Parent, Inc. All rights reserved.

ACCESS SERVICE

8. **Miscellaneous Services** (Cont'd)

8.5 **Reserved**

© 2022 Frontier Communications Parent, Inc. All rights reserved.

ACCESS SERVICE

8. **Miscellaneous Services** (Cont'd)

8.5 **Reserved**

© 2022 Frontier Communications Parent, Inc. All rights reserved.

ACCESS SERVICE

8. Miscellaneous Services (Cont'd)

8.5 Reserved

© 2022 Frontier Communications Parent, Inc. All rights reserved.

ACCESS SERVICE

8. **Miscellaneous Services** (Cont'd)

8.5 **Reserved**

© 2022 Frontier Communications Parent, Inc. All rights reserved.

ACCESS SERVICE

8. **Miscellaneous Services** (Cont'd)

8.5 **Reserved**

© 2022 Frontier Communications Parent, Inc. All rights reserved.

ACCESS SERVICE

8. MISCELLANEOUS SERVICES (Cont'd)

8.5 Reserved

© 2022 Frontier Communications Parent, Inc. All rights reserved.

ACCESS SERVICE

8. MISCELLANEOUS SERVICES (Cont'd)

8.5 Reserved

© 2022 Frontier Communications Parent, Inc. All rights reserved.

ACCESS SERVICE

8. MISCELLANEOUS SERVICES (Cont'd)

8.5 Reserved

© 2022 Frontier Communications Parent, Inc. All rights reserved.

ACCESS SERVICE

8. MISCELLANEOUS SERVICES (Cont'd)

8.5 Reserved

© 2022 Frontier Communications Parent, Inc. All rights reserved.

ACCESS SERVICE

8. MISCELLANEOUS SERVICES (Cont'd)

8.5 Reserved

© 2022 Frontier Communications Parent, Inc. All rights reserved.

ACCESS SERVICE

8. MISCELLANEOUS SERVICES (Cont'd)

8.5 Reserved

© 2022 Frontier Communications Parent, Inc. All rights reserved.

ACCESS SERVICE

8. **Miscellaneous Services** (Cont'd)

8.6 **RESERVED**

© 2022 Frontier Communications Parent, Inc. All rights reserved.

ACCESS SERVICE

8. **Miscellaneous Services** (Cont'd)

8.6 **RESERVED**

© 2022 Frontier Communications Parent, Inc. All rights reserved.

ACCESS SERVICE

8. **Miscellaneous Services** (Cont'd)

8.6 **RESERVED**

© 2022 Frontier Communications Parent, Inc. All rights reserved.

ACCESS SERVICE

8. **Miscellaneous Services** (Cont'd)

8.6 **RESERVED**

© 2022 Frontier Communications Parent, Inc. All rights reserved.

ACCESS SERVICE

8. **Miscellaneous Services** (Cont'd)

8.6 RESERVED

© 2022 Frontier Communications Parent, Inc. All rights reserved.

ACCESS SERVICE

8. **Miscellaneous Services** (Cont'd)

8.6 **RESERVED**

© 2022 Frontier Communications Parent, Inc. All rights reserved.

ACCESS SERVICE

8. MISCELLANEOUS SERVICES (Cont'd)

8.7 Denial/Restoral Service

The Telephone Company will, upon request, provide Denial/Restoral service to ICs for those end users that have designated the IC as their primary interexchange carrier.

(A) Denial/Restoral service provides for Telephone Company notification to an IC that an end user's local exchange service has been temporarily suspended due to non-payment of the end user's local exchange service. Subsequently, the Telephone Company will provide notification to the IC if the end user's service has been restored from temporary suspension.

(B) Notification shall be provided via the Customer Account Record Exchange electronic interface.

(C) The IC agrees to abide by all applicable rules, decisions, orders, statutes and laws concerning the disclosure of published and nonpublished telephone numbers, and further agrees to use the information provided by Denial/Restoral service only for the purposes of billing services provided to their end users.

(D) A charge in (E) will apply to the IC for each notification per end user local telephone exchange service number provided to the IC.

(E) Denial/Restoral Service
- per telephone number provided $.10

© 2022 Frontier Communications Parent, Inc. All rights reserved.

ACCESS SERVICE

8. Miscellaneous Services (Cont'd)

8.8 Telecommunications Service Priority

8.8.1 General

The Telephone Company will arrange a Telecommunications Service Priority (TSP) installation and service restoration classification on receipt of certification in conformance with Part 64, Subpart D, Appendix A of the Federal Communications Commission's Rules and Regulations.

The TSP System is a service, developed to meet the requirements of the Federal Government, for the priority installation and/or restoration of NSEP telecommunications services. These include both Switched and Special Access Services. The TSP System applies only to NSEP telecommunications services and requires and authorizes priority action by the Telephone Company.

The TSP System shall be provided in accordance with the guidelines set forth in Technical References Telecommunications Service Priority (TSP) System for National Security Emergency Preparedness (NSEP) Service Vendor Handbook (NCS) H 3-1-2 and Telecommunications Service Priority (TSP) System for National Security Emergency Preparedness (NSEP) Service User Manual (NCS) M 3-1-1.

8.8.2 Priority Installation

Expedited order charges, as set forth in Section 5.3.1.(D), are applicable to access orders submitted with a TSP installation priority. Access orders requiring the special construction of facilities will be subject to special construction regulations, rates and charges as set forth in Section 5.1.12 preceding.

© 2022 Frontier Communications Parent, Inc. All rights reserved.

ACCESS SERVICE

8. **Miscellaneous Services** (Cont'd)

8.8 **Telecommunications Service Priority** (Cont'd)

8.8.3 **Priority Restoration**

(A) New orders with priority level assignments will be provisioned in accordance with the guidelines established for TSP. The Telephone Company will not accept orders for new Restoration Priority System (RP) circuits after September 10, 1990. Applications for circuits previously provisioned under RP must be resubmitted for provisioning in accordance with the guidelines established for TSP during the 30-month transition period between September 10, 1990 through March 10, 1993. The Nonrecurring Charge as set forth in 8.8.4(B) will apply to RP orders resubmitted for provisioning under the TSP System. After the transition period, the Telephone Company will discontinue any RP assignments remaining on record.

(B) Under certain conditions it may be necessary to preempt one or more customer services with a lower or no restoration priority in order to install or restore NSEP telecommunications service(s) of a higher priority. If such preemption is necessary, and if circumstances permit, the Telephone Company will make reasonable effort to notify the preempted service customer of the action to be taken.

(C) No additional charge applies to the implementation of a Priority Restoration level submitted concurrent with the initial order to install the Switched or Special Access Service. The nonrecurring charge set forth in 8.8.4(B) following will apply to any request to change or add a Priority Restoration level on an existing Switched or Special Access Service.

© 2022 Frontier Communications Parent, Inc. All rights reserved.

ACCESS SERVICE

8. **Miscellaneous Services** (Cont'd)

8.8 **Telecommunications Service Priority** (Cont'd)

8.8.4 **Rates and Charges**

The following rates and charges are in addition to all other rates and charges that may be applicable for other services that may be furnished the provisions of this Guide which operate in conjunction with the TSP System.

(A) Priority Installation of an Access Service.

(1)	Expedited Orders	Regulations, rates and charges are the same as those set forth in 5.3.1(D) preceding for Switched and Special Access Service.
(2)	Utilization of Specially Constructed Facilities.	Regulations, rates and charges as set forth in Section 5.1.12 preceding.

(B) Priority Restoration (PR) Level Implementation on an Access Service.

			Monthly Rates	Nonrecurring Charges
(1)	When the PR level is implemented concurrent with the initial ASR.	---	$4.90	None
(2)	When the PR level is added or changed on an existing Access Service.	---	$4.90	$14.50

© 2022 Frontier Communications Parent, Inc. All rights reserved.

ACCESS SERVICE

9. RESERVED

© 2022 Frontier Communications Parent, Inc. All rights reserved.

ACCESS SERVICE

10. RESERVED

© 2022 Frontier Communications Parent, Inc. All rights reserved.

ACCESS SERVICE

11. Special Facilities Routing of Access Services

11.1 Description of Special Facilities Routing of Access Services

The services provided under this Guide are provided over such routes and facilities as the Telephone Company may elect. Special Facilities Routing is involved when, in order to comply with requirements specified by the customer, the Telephone Company provides Switched Access Service, Special Access Service or Special Federal Government Access Service in a manner which includes one or more of the following conditions:

11.1.1 Diversity

Two or more services must be provided over not more than two different physical routes. Diversity is a Basic Service Element (BSE) under the Telephone Company's Open Network Architecture (ONA) Plan.

11.1.2 Avoidance

A service must be provided on a route which avoids specified geographical locations.

11.1.3 Cable-Only Facilities

Certain Voice Grade services are provided on Cable-Only Facilities to meet the particular needs of a customer.

Service is provided subject to the availability of Cable-Only facilities. In the event of service failure, restoration will be made through the use of any available facilities as selected by the Telephone Company.

Avoidance and Diversity are available on Switched Access Service as set forth in 6. preceding, Special Access Services as set forth in 7. preceding, and Special Federal Government Access Services as set forth in 10.6 preceding. Cable-Only Facilities are available for Switched Access Service as set forth in 6. preceding; Voice Grade Special Access Services as set forth in 7.5 preceding and Special Federal Government Access Services as set forth in 10.6 preceding.

In order to avoid the compromise of special routing information, the Telephone Company will provide the required routing information for each specially routed service to only the ordering customer. If requested by the customer, this information will be provided when service is installed and prior to any subsequent changes in routing.

© 2022 Frontier Communications Parent, Inc. All rights reserved.

ACCESS SERVICE

12. Specialized Service or Arrangements

12.1 General

Specialized Service or Arrangements may be provided by the Telephone Company, at the request of a customer, on an individual case basis if such service or arrangements meet the following criteria:

- The requested service or arrangements are not offered under other sections of this Guide.
- The facilities utilized to provide the requested service or arrangements are of a type normally used by the Telephone Company in furnishing its other services.
- The requested service or arrangements are provided within a LATA.
- The requested service or arrangements are compatible with other Telephone Company services, facilities, and its engineering and maintenance practices.
- This offering is subject to the availability of the necessary Telephone Company personnel and capital resources.

12.2 Rates and Charges

Rates and charges and additional regulations, if applicable, for specialized service or arrangements provided on an individual case basis are filed following:

© 2022 Frontier Communications Parent, Inc. All rights reserved.

ACCESS SERVICE

13. **Exceptions to Access Service Offerings**

The service offered under the provisions of this Guide are subject to availability as set forth in 2.1.4 preceding. In addition, the following exceptions apply:

(Paragraphs 13.1 through 13.5 following are reserved for future listing. In the meantime, in planning an end-to-end service, the customer should contact the Telephone Company in each customer premises city to assure itself that all of the service or service components required for a given customer service are currently available).

13.1 The following service(s) is (are) not offered in the operating territory of listed Issuing Carriers.

(Reserved for future use.)

13.2 The following offering(s) is (are) limited to existing locations. No inside moves, rearrangements or additions will be permitted.

(Reserved for future use.)

13.3 The following offering(s) is (are) limited to existing locations. Inside moves or rearrangements may be undertaken. However, no additions will be permitted.

(Reserved for future use.)

13.4 The following offering(s) is (are) limited to existing locations where additional units may be added for growth. Inside moves or rearrangements may be undertaken.

(Reserved for future use.)

13.5 The following offering(s) is (are) limited to existing locations where additional units may be added for growth. However inside moves or rearrangements will not be permitted.

(Reserved for future use.)

© 2022 Frontier Communications Parent, Inc. All rights reserved.

ACCESS SERVICE

14. RESERVED

© 2022 Frontier Communications Parent, Inc. All rights reserved.

ACCESS SERVICE

15. RESERVED

© 2022 Frontier Communications Parent, Inc. All rights reserved.

ACCESS SERVICE

16. RESERVED

© 2022 Frontier Communications Parent, Inc. All rights reserved.

ACCESS SERVICE

17. RESERVED

© 2022 Frontier Communications Parent, Inc. All rights reserved.

ACCESS SERVICE

18 ADVANCED COMMUNICATIONS NETWORKS

18.1 (A) General

This section contains the rules and regulations pertaining to the provision of Packet Switching Network Service *and Modem Based Data Aggregation Service (Modem-Based Dial Up Network Access). The regulations and rates specified herein are in addition to the applicable regulations and rates specified in other sections of this Guide.

The following is a list of the Telephone Company's Open Network Architecture (ONA) Packet Service Basic Service Elements (BSEs) which provide a cross-reference to the generic ONA product names.

(B)

Generic Name	The Telephone Company's Name
Fast Select Acceptance - Packet	Fast Select
Fast Select Request - Packet	Fast Select

(C) Service Rearrangements

Service rearrangements are changes to existing (installed) services which may be administrative only in nature, or that involve actual physical change to the service.

Changes in the type of service will be treated as a discontinuance of the service and an installation of a new service.

Changes in the physical location of the point of termination are treated as moves which are described and charged for as in (D) following.

Administrative changes to existing service will be made without charge(s) to the customer. Administrative changes are as follows:

Change of customer name, i.e., the customer or record does not change but rather the name of record changes its name, e.g., XYZ Company to XYZ Communications,

* Effective November 19, 2005, this service is no longer available to any customer who is not a customer as of November 19, 2005. Effective November 19, 2005, existing customers may not make additions, moves or changes to this service or submit any new orders for this service.

© 2022 Frontier Communications Parent, Inc. All rights reserved.

ACCESS SERVICE

18 **ADVANCED COMMUNICATIONS NETWORKS** (Cont'd)

18.1 (C) **Service Rearrangements** (Cont'd)

- Change of customer premises address when the change of address is not a result of a physical relocation of facilities,
- Change in billing data (name, address, or contact name or telephone number),
- Change of customer contact name or telephone number, and
- Change of customer service element identification.
- Change of jurisdiction involving no physical changes to the service.

(D) **Moves**

A move involves a change in the physical location of the point of termination of service. A move normally involves an interruption of service for the period required to complete the move. No credit allowance will be granted for that period. Special Construction may also be applicable at the different customer premises.

A customer may request that service not be interrupted during a move. To comply with that request, it may be necessary to install a duplicate service, and subsequently discontinue the existing service. Charges, monthly and nonrecurring, will apply for the duplicate service. A new minimum period will be established for the duplicate portion of the service, depending on which end of the service is moved. The customer will remain responsible for all minimum period charges associated with the corresponding portion of the disconnected service.

The charge for the move depends on whether the move is within the same CDL or to a different CDL.

© 2022 Frontier Communications Parent, Inc. All rights reserved.

ACCESS SERVICE

18 **ADVANCED COMMUNICATIONS NETWORKS** (Cont'd)

18.1 (D) **Moves** (Cont'd)

(1) **Same CDL**

When the move of a termination is to a new point within the same customer premises (same address and/or same building), the charge for the move will be the installation charge for the portion of the service being reterminated. There will be no change in the minimum period requirements. For services subject to payment plan regulations, the same payment period will remain in force.

(2) **Different Customer Premises**

When the move is to a different customer premises (different address and different building), except as specified below, it will be treated as a disconnect and an installation of service. The appropriate service installation charge for the service termination(s) affected will apply. A new minimum period will be established for the installed service. The customer will remain responsible for all minimum period charges associated with the disconnected service. For services subject to payment plan regulations, a new payment plan will be established and full assessment of the remaining liabilities will be applicable.

When the move is to a different CDL but served by the same serving wire center, the following conditions apply:

- A change order will be required.
- The appropriate service installation charge for the service termination(s) will apply.
- For services subject to payment plan regulations, if the customer of record remains the same with no lapse in service, the appropriate NRCs for changes will apply. Otherwise, the move will be treated as a disconnect and an installation of service and all appropriate NRCs and full assessment of the remaining liabilities will be applicable.

© 2022 Frontier Communications Parent, Inc. All rights reserved.

ACCESS SERVICE

18 ADVANCED COMMUNICATIONS NETWORKS (Cont'd)

18.1 Packet Switching Network Service *

(A) Service Description

Packet Switching Network Service uses packet switching technology to provide a switched data transport service. This service uses analog and digital facilities to provide usage-sensitive data transport for a variety of interactive (or bursty) data applications between two or more customer premises. The packet switch will be classified as a customer premises.

Packet switching technology divides data streams into packets. The packet network examines routes and transports packets individually without maintaining a physical path between bursts of data. This service is based on CCITT (Consultative Committee on International Telegraphy and Telephony) X.25 protocol and X.75 internetworking protocol. The X.25 and X.75 protocols are international standards developed by the CCITT that provide the foundation for Public Packet Switched Networks. Packet Switching Network Service and features are available where facilities and conditions permit.

(B) Service Provisioning

Customers may access the packet switching network through an X.75 internetworking access.

Packet switching carriers with a Data Network Identification Code may interconnect to an access port on the packet switching network with X.75 protocol at transmission speeds of 9.6 Kbps or 56 Kbps. Each X.75 access will require an X.75 Access Port charge, and a DDS Circuit Termination charge (9.6 Kbps or 56 Kbps) with associated DDS Special Transport charges, as set forth in Section 7.

The Circuit Termination and Special Transport charges provide analog or digital connections from the packet carrier's location to the access port on the Telephone Company's packet network. Shared use (ratcheting) to provision the access connection is not permitted.

The special access service associated with packet switching will be subject to the meet point billing requirements set forth in Section 2. However, all packet usage recorded at the Telephone Company's packet switch will be billed by the Telephone Company.

* Effective November 19, 2005, this service is no longer available to any customer who is not a customer as of November 19, 2005. Effective November 19, 2005, existing customers may not make additions, moves, or changes to this service or submit any new orders for this service.

© 2022 Frontier Communications Parent, Inc. All rights reserved.

ACCESS SERVICE

18 **ADVANCED COMMUNICATIONS NETWORKS** (Cont'd)

18.2 **Packet Switching Network Service *** (Cont'd)

(C) Rate Regulations

(1) Minimum Period

The minimum service period is one month.

(2) Rate Application

(a) The monthly rates are flat-rated and are applied based on the speed and number of logical channels subscribed to per access port.

(b) Monthly rates for logical channels subscribed to will apply in addition to the monthly recurring charges for X.75 access. Rates applicable for X.75 access include a monthly recurring rate and an installation charge per X.75 access port, and are specified under Section 18.6.1. A DDS Circuit Termination charge (9.6 Kbps or 56 Kbps) and associated DDS Special Transport charges from Section 7 will also apply.

* Effective November 19, 2005, this service is no longer available to any customer who is not a customer as of November 19, 2005. Effective November 19, 2005, existing customers may not make additions, moves, or changes to this service or submit any new orders for this service.

© 2022 Frontier Communications Parent, Inc. All rights reserved.

ACCESS SERVICE

18 **ADVANCED COMMUNICATIONS NETWORKS** (Cont'd)

18.2 **Packet Switching Network Service *** (Cont'd)

(D) Supplemental Features

(1) Fast Select allows a sending data terminal to forward up to 128 bytes of data along with call setup and clearing packets. This feature is available to all customers and is initiated on a call-by-call basis.

(2) Priority allows a customer to establish a "priority" status to the customer's data as it processes through the network. This feature is available to all customers and is initiated on a call-by-call basis.

* Effective November 19, 2005, this service is no longer available to any customer who is not a customer as of November 19, 2005. Effective November 19, 2005, existing customers may not make additions, moves, or changes to this service or submit any new orders for this service.

© 2022 Frontier Communications Parent, Inc. All rights reserved.

ACCESS SERVICE

18 **ADVANCED COMMUNICATIONS NETWORKS** (Cont'd)

18.2 **Packet Switching Network Service *** (Cont'd)

(E) Reserved for Future Use

© 2022 Frontier Communications Parent, Inc. All rights reserved.

ACCESS SERVICE

19. RESERVED

© 2022 Frontier Communications Parent, Inc. All rights reserved.

ACCESS SERVICE

20. Ethernet Private Line

(A) General

This section contains the rules and regulations pertaining to the provisioning of SONET Access and Dense Wave Division Multiplexing (DWDM) Service. The regulations and rates specified herein are in addition to the applicable rates and regulations specified in other Sections of this Guide.

This service supports asynchronous bandwidth capacities at 1.5 Mbps and 45 Mbps in addition to synchronous Optical Carrier (OC) bandwidth capacities at OC3, OC3c, OC12, OC12c, OC48, OC48c and OC192 bit rates and 1.25 Gbps or 2.5 Gbps wavelengths. The SONET add/drop multiplexer aggregates lesser bit speed services onto the dedicated SONET ring or the two-point SONET circuit configuration.

© 2022 Frontier Communications Parent, Inc. All rights reserved.

ACCESS SERVICE

20. **Ethernet Private Line** (Cont'd)

(B) Description

Ethernet Private Line is comprised of high speed SONET based and/or Dense Wave Division Multiplexing (DWDM) technology providing connectivity at, and transport between, two or more customer designated locations (CDLs). Additionally, certain Ethernet Private Line services provide connectivity between a customer designated location and a wire center where connection to an advanced data service# occurs.

(C) Conditions

Ethernet Private Line services are provided where facilities are available with sufficient bandwidth capacity to meet the customers request.

The customer is responsible for providing all facilities and cabling necessary to connect customer equipment to this interface.

Customer Facility Assignment (CFA) is controlled by the Telephone Company, on all non-interexchange access customer serving wire centers on the IOF and extends to the terminating CDL. Should the customer require control of the facility assignment and order multiplexing on the IOF, the services from the multiplexer to the end user serving wire center will be ordered from Section 7 of this Guide.

Advanced data services include Telephone Company provided frame relay services, switched multi-megabit services, Internet Protocol services and ATM-cell relay services. Connections to advanced data services are provided by the Telephone Company where such connections are technically and operatoinally feasible, as determined by the Telephone Company.

© 2022 Frontier Communications Parent, Inc. All rights reserved.

ACCESS SERVICE

20. **Ethernet Private Line** (Cont'd)

20.3

(C) Conditions (Cont'd)

It is the customer's responsibility to ensure that the customer's equipment provides industry standard electrical signals compatible with Ethernet Private Line transport transmission. Technical specifications are contained in the following Technical References:

GR-253-CORE, Issue 4
GR-1400-CORE, Issue 3
GR-1374-CORE, Issue 1
ANSI T1.105.01-2000 (R2005)
ANSI T1.102-1993 (R2005)

The Company will work cooperatively with the customer during a planning session to insure that the customer orders sufficient Ethernet Private Line bandwidth capacity to satisfy the customer's requirements as well as other applicable Ethernet Private Line services. This planning session must take place prior to an initial Ethernet Private Line ASR.

© 2022 Frontier Communications Parent, Inc. All rights reserved.

ACCESS SERVICE

20. **Ethernet Private Line** (Cont'd)

(D) Application of Rates and Charges

The Connect rate element provides the platform for customer access to the Telephone Company's Optical Network. The Connect element provides the link between the CDL and the SWC of the CDL.

(1) There are three types of Connects:

- Express Connect
- Flex Express Connect
- Custom Connect#
-
-

(a) Reserved for Future Use

(b) Reserved for Future Use

(c) Reserved for Future Use

Service availability limited. Refer to # footnote on Page 20-10.

© 2022 Frontier Communications Parent, Inc. All rights reserved.

ACCESS SERVICE

20. **Ethernet Private Line** (Cont'd)

(D) Application of Rates and Charges (Cont'd)

(d) Reserved for Future Use

(e) Reserved for Future Use

(f) Reserved for Future Use

© 2022 Frontier Communications Parent, Inc. All rights reserved.

ACCESS SERVICE

20. **Ethernet Private Line** (Cont'd)

(D) Application of Rates and Charges (Cont'd)

(g) Reserved for Future Use

© 2022 Frontier Communications Parent, Inc. All rights reserved.

ACCESS SERVICE

20. **Ethernet Private Line** (Cont'd)

(D) Application of Rates and Charges (Cont'd)

(h) Express Connect #

The Express Connect provides a connection to the Telephone Company's Ethernet Private Line wire center(s) via a ring topology consisting of three nodes, one of which must be a Telephone Company wire center. When two of the nodes are customer designated locations, both must be served by the same serving wire center and only one customer location can be without an Express Connect CDL Node. The Express Connect is provided at a bandwidth of OC3, OC12 or OC48 and may be ordered under a one (1) year, three (3) year, five (5) year or seven (7) year Term Payment Plan (TPP).

The Express Connect has three rate elements, a "First System" with optional "Additional System(s) and Additional Express Nodes." The customer may order up to three "Additional Systems" of OC3, OC12 or OC48 bandwidth not to exceed OC12, OC48 or OC192 bandwidth capacity, respectively. Rider charges for Express Connect are included in its monthly rate.

The customer may subscribe to Custom Connect Shared Transport, Custom Connect Dedicated Transport or Banded Optical Transport with Express Connect.

The customer may also subscribe to Telephone Company provided banded SONET transport with Express Connect, provided that such connections are technically and operationally feasible, as determined by the Telephone Company.

Effective August 15, 2009, orders for new Express Connect First Systems, Additional CDL Nodes, and/or Additional CO Nodes are no longer permitted. The Telephone Company will continue to provide Express Connect pursuant to this Section 20 on any existing Express Connect that is in-service as of August 15, 2009, or any order for Express Connect that is placed with the Telephone Company prior to August 15, 2009, (collectively, Existing Express Connect). Changes in bandwidth capacity, moves, and/or rearrangements are not permitted.

© 2022 Frontier Communications Parent, Inc. All rights reserved.

ACCESS SERVICE

20. **Ethernet Private Line** (Cont'd)

(D) Application of Rates and Charges (Cont'd)

(i) Flex Express Connect #

The Flex Express Connect provides a connection to the Telephone Company's Ethernet Private Line wire center(s) via ring topology with a minimum of four nodes, two of which must be Telephone Company wire centers. When two or more of the nodes are customer designated locations, only one of those nodes may be without electronics. The Flex Express Connect is provided at a bandwidth of OC3, OC12 or OC48.

Flex Express Connect is comprised of four rate elements, a "First System" with optional "Additional System(s)", Additional Flex Nodes and Flex Express Transport. The customer may order up to three "Additional System(s) of OC3, OC12 or OC48 bandwidth not to exceed OC12, OC48 or OC192 bandwidth capacity, respectively.

Flex Express Transport is applied to the entire circumference of the service and is measured from the serving wire center of the customer designated location(s) and the CO Nodes. Flex Express Transport is ordered with the "First System" and each "Additional System" Flex Express Connect in OC3, OC12 or OC48 bandwidth not to exceed OC12, OC48 or OC192 bandwidth capacity, respectively.

Flex Express may be ordered under a one (1) year, three (3) year, five (5) year or seven (7) year Term Payment Plan (TPP). After the initial order for Flex Express Connect, month-to-month rates shall apply for the Additional Flex Nodes. When the TPP of the Flex Express "First System" expires and the customer does not renew the TPP as shown in 20.3(G)(2), the first Flex Express "Additional System" will assume the Flex Express "First System" rates.

In addition to the Flex Express Connect rate elements, Custom Connect Transport (CC Transport), as described in 20(D)(1)(j), is applicable for transport from the serving wire centers of the customer designated locations and CO Nodes. Rider charges for Flex Express Connect are included in its monthly rate.

* Grandfathered to existing service effective April 20, 1999.

\# Effective August 15, 2009, orders for new Flex Express Connect First Systems, Additional CDL Nodes, and/or Additional CO Nodes are no longer permitted. The Telephone Company will continue to provide Flex Express Connect pursuant to this Section 20 on any existing Flex Express Connect that is in-service as of August 15, 2009, or any order for Flex Express Connect that is placed with the Telephone Company prior to August 15, 2009, (collectively, Existing Flex Express Connect). Changes in bandwidth capacity, moves, and/or rearrangements are not permitted.

© 2022 Frontier Communications Parent, Inc. All rights reserved.

ACCESS SERVICE

20. **Ethernet Private Line** (Cont'd)

(D) Application of Rates and Charges (Cont'd)

(i) Flex Express Connect # (Cont'd)

The customer may subscribe to Custom Connect Shared Transport, Custom Connect Dedicated Transport or Banded Optical Transport with Flex Express Connect.

The customer may also subscribe to Telephone Company provided banded SONET transport with Flex Express Connect, provided that such connections are technically and operationally feasible, as determined by the Telephone Company.

Rider charges are included in the monthly rate for Flex Express Connect.

Service availability limited. Refer to # footnote on Page 20-8.

© 2022 Frontier Communications Parent, Inc. All rights reserved.

ACCESS SERVICE

20. **Ethernet Private Line** (Cont'd)

(D) Application of Rates and Charges (Cont'd)

(j) Custom Connect#

The Custom Connect provides a connection to the Telephone company's Optical network and an access customer's designated location (CDL). The Custom Connect is comprised of CO Nodes, CDL Links or SONET Premises Nodes, Transport and Riders. Each Custom Connect must consist of a minimum of two customer designated locations, one of which must be a CDL Link.

The Custom Connect may be ordered as switched or special access. The Concatenated/Non-concatenated Custom Connect CDL Link is provided with a two fiber network interface. The Concatenated/Non-concatenated CDL Link may be optionally ordered with a four fiber, 1+1 protected network interface, as Single or Diverse Route.

Custom Connect may connect to Dedicated SONET Optical Transport Service (DSOTS)optical transport channels or may be provided over an DSOTS backbone network as set forth in 20.1 following. DSOTS combines DWDM and SONET technologies to create a high-speed backbone network.

Custom Connect may also be connected to the following Telephone Company services, provided that such connections are technically and operationally feasible, as determined by the Telephone Company:

- dedicated SONET ring service
- point-to-point SONET service
- DWDM ring service
- SONET entrance facility service
- ethernet private line service

Custom Connect may also be provided over a Telephone Company provided DWDM ring backbone network provided that such configurations are technically and operationally feasible, as determined by the Telephone Company.

Custom Connect Single Route and Diverse Route at OC12c and OC48c may also connect to an advanced data service at designated Telephone Company wire centers.

The following footnote is not applicable to the DS1, DS3, or STS1 Rider rate elements or the DS1 or DS3/STS1 Shared Transport rate elements of Custom Connect. Effective March 30, 2007, orders for new Custom Connect are no longer permitted. The Telephone Company will continue to provide Custom Connect pursuant to this Section 20(D)(j) on any existing Custom Connect that is in-service as of March 30, 2007, or any order for Custom Connect that is placed with the Telephone Company prior to March 29, 2007 (collectively, Existing Custom Connect), subject to the following condition:

For any Existing Custom Connect that is currently subscribed to a term plan (i.e., commitment periods of 1-, 3- 5- and 7-years), the Telephone Company will continue to provide the Existing Custom Connect for an additional six (6) months beyond the expiration date of the customer's current commitment period, or until the customer replaces the Existing Custom Connect with a comparable Telephone Company provided service, or discontinues service, whichever comes first. Subject to availability of facilities and equipment, certain additions and/or changes to the Existing Custom Connect are permitted provided that such changes do not require a new commitment period.

© 2022 Frontier Communications Parent, Inc. All rights reserved.

ACCESS SERVICE

20. **Ethernet Private Line** (Cont'd)

(D) Application of Rates and Charges (Cont'd)

(j) Custom Connect# (Cont'd)

CO Node

The CO Node rate element is applicable for each central office that is equipped with a fiber optic terminal in which the customer requests the ability to add/drop traffic to a CDL. Traffic is dropped from the CO Node via ports (lower speed drops). The CO Node may be ordered when a customer requires OC level multiplexing on the Custom Connect. If the customer wants to drop traffic below a DS3 at the CO Node, the customer must request a minimum DS1 interface and appropriate special access lines from Section 5. The CO Node may also be used when the customer wants to add/drop DS1 or DS3 traffic to a CDL located between the service areas shown under Section 5.2.7(H). The OC192 CO Node's ability to drop traffic below an OCn level is limited to new and in-service terminals technically capable of providing such directly from the ADM. See Rider section, herein, for further details. The appropriate multiplexing and access lines and transport rates from Section 5 will apply in addition to the CO Node and appropriate rider charges. However, multiplexing rates from Section 5 will not apply when the following conditions are met:

(1) The Customer requests to drop a DS3 from a CO Node for the purpose of establishing a DS3 multiplexed facility in its serving wire center; and
(2) the customer subscribes to and is billed for the CO Node rate element; and
(3) the customer CO Node is located in the same central office building where the DS3 multiplexed facility is to be located

When the customer CO Node is not located within the wire center serving the CDL, rates including the 3/1 multiplex rates apply as set forth in Section 5 and other Sections of this Guide. These charges are in addition to the appropriate CO Node, rates associated with transport of the DS3 facility to the wire center where the CO Node is located and rider charges applicable under this Section 20.

The CO Node may be ordered at an OC3, OC12, OC48 or OC192 bandwidth capacity. The CO Node may be ordered under a one (1) year, three (3) year, five (5) year or seven (7) year Term Payment Plan (TPP).

Service availability limited. Refer to # footnote on Page 20-10.

© 2022 Frontier Communications Parent, Inc. All rights reserved.

ACCESS SERVICE

20. **Ethernet Private Line** (Cont'd)

(D) Application of Rates and Charges (Cont'd)

(j) Custom Connect# (Cont'd)

CDL Link

The CDL Link rate element is applicable for each customer designated location in which the customer requests the ability to add/drop traffic. The CDL Link is offered as Single Route, Diverse Route or Ring Route and may be ordered with premise multiplexer provided or with premise fiber meet provided as OC3, OC12, OC48 or OC192 bandwidth capacity. Only one CDL Link per connect may be ordered with premise fiber meet provided. The premise fiber meet will terminate on a fiber cross connect panel at the demarcation point. CDL Link with premise fiber meet is not available for jointly provided meet-point arrangements except where the Telephone Company provides a node within its network to the customer.

If more than two Links or Nodes are ordered on the same order, the CDL Link must be ordered as a Ring Route CDL Link. A Ring Route CDL Link has a minimum of three nodes, one of which must be located in a Telephone Company wire center. A Custom Connect ordered via a ring topology will be provided with a service guarantee as shown in Section 2.7.1.1. When Custom Connect is configured in a ring topology and is ordered under a meet point billing arrangement in which the Telephone Company acts as an intermediate carrier as set forth in Section 2 preceding, a CO Node is required.

The CDL Link may be ordered as Single Route or Diverse Route with concatenated or non-concatenated optical interface for OC3/OC3c, OC12/OC12c and OC48/OC48c. These CDL Links will terminate on a fiber cross connect panel at the demarcation point. The rider charges are included in the monthly rate for these CDL Links.

The CDL Link may also be ordered as 1.25 and 2.5 Gbps Single Route or Diverse Route. This CDL Link cannot ride a higher level facility and can only be ordered CDL to CDL.

The CDL Link may be ordered under a one (1) year, three (3) year, five (5) year or seven (7) year TPP.

When Custom Connect is provided over an DSOTS backbone and the transport between the nodes is provided using DSOTS optical transport channels, a SONET Premises Node applies in lieu of the CDL Link to each customer designated location of the Custom Connect ring where SONET multiplexing is required.

When Custom Connect is provided over a Telephone Company provided DWDM backbone and the transport between the nodes is provided using DWDM optical transport channels, a SONET Premises Node applies in lieu of the CDL Link to each customer designated location of the Custom Connect ring where SONET multiplexing is required.

* Grandfathered to existing services effective November 1, 2003.

Service availability limited. Refer to # footnote on Page 20-10.

© 2022 Frontier Communications Parent, Inc. All rights reserved.

ACCESS SERVICE

20. **Ethernet Private Line** (Cont'd)

(D) Application of Rates and Charges (Cont'd)

(j) Custom Connect# (Cont'd)

CDL Link with Optical Cross Connect

The CDL Link with Optical Cross Connect provides the communications path between the Telephone Company provided electronics and a customer's transmission equipment and facilities where the customer is provided EIS as defined in Section 17. This rate element includes the intra-office connection from the Telephone Company fiber optic terminal and the optical jumpers to facilitate the cross connect to the customer's transmission equipment and facilities within the Telephone Company wire center. This rate element allows connectivity to Dedicated SONET Ring (DSR) or a Telephone Company provided dedicated SONET ring.

The CDL Link with Optical Cross Connect will be provided as single route without Telephone Company provided electronics as OC3, OC3c, OC12, OC12c, OC48, OC48c or OC192 as ordered by the customer.

In addition to the rate for the CDL Link with Optical Cross Connect, the appropriate CDL Link rate element is applicable from the customer-designated location to the serving wire center.

The CDL Link with Optical Cross Connect may be ordered under a one (1) year, three (3) year, five (5) year or seven (7) year TPP.

Rates for the CDL Link with Optical Cross Connect are as shown in 20(L)(25) will apply in addition to other charges as specified in Section 17.

Network Channel Interfaces

The network channel interface codes define the bit rates that are available. Network Channel interfaces and codes are defined below:

Service	Ports	Codes
OC3, OC3c	2 Fiber	02SOF.D(B&F)
OC3, OC3c	4 Fiber, 1+1 Protection	04SOF.D(B&F)
STM1	2 Fiber	02SOF.D(B&F)
STM1	4 Fiber, 1+1 Protection	04SOF.D(B&F)
OC12, OC12c, STM4	2 Fiber	02SOF.D(B&F)
OC12, OC12c, STM4	4 Fiber, 1+1 Protection	04SOF.D(B&F)
OC12c, OC48c	2 Fiber	02CXF.A(B&C)
OC48, OC48c	2 Fiber	02SOF.D(B&F)
OC48, OC48c	4 Fiber, 1+1 Protection	04SOF.D(B&F)

Service availability limited. Refer to # footnote on Page 20-10.

© 2022 Frontier Communications Parent, Inc. All rights reserved.

ACCESS SERVICE

20. **Ethernet Private Line** (Cont'd)

(D) Application of Rates and Charges (Cont'd)

(j) Custom Connect# (Cont'd)

Transport

Transport may be ordered as shared or dedicated. Shared Transport is applicable when the transport between Node and/or Links is ordered at different bandwidth levels. The Dedicated Transport is applicable when transport between the Nodes and/or Links is of the same bandwidth level.

Shared Transport may be ordered in bandwidths of DS1, DS3/STS1, OC3, OC3c, OC12, OC12c, OC48 or OC48c. Dedicated Transport may be ordered in bandwidths of OC3, OC3c, OC12, OC12c, OC48, OC48c or OC192, 1.25 Gbps or 2.5 Gbps. The transport is mileage sensitive and will be calculated based on the V&H coordinates of the wire centers comprising each segment of the connect. The meet point billing mileage calculation is specified in 2.7.3. The customer has the option to subscribe to Banded Optical Transport in place of Custom Connect Shared Transport. DS1 and DS3/STS1 Shared Transport may also be ordered in combination with Telephone Company provided point-to-point SONET service.

The Custom Connect Transport rate element is distance sensitive using airline mileage between serving wire centers and is calculated consistent with that specified in 2.7 preceding. Mileage is rounded up to the next whole mile.

When point-to-point Custom Connect is provided over a Dedicated SONET Optical Transport Service (DSOTS) backbone network as set forth in Section 20.1 following, connection between the Custom Connect nodes is provided using an DSOTS optical transport channel in lieu of Custom Connect transport. When Custom Connect configured in a ring topology is provided over an DSOTS backbone network, connection between the SONET nodes (Custom Connect CO Nodes and/or SONET Premises Nodes) is provided using unprotected DSOTS optical transport channels as set forth in Section 20.1 in lieu of Custom Connect transport. Since protection is inherent in the Custom Connect service, protection is not required on the DSOTS optical transport channels.

Connection of Custom Connect configured in a ring topology to an DSOTS ring is provided over an equal speed, unprotected optical transport channel (e.g., an OC3 Custom Connect node would connect to a 155.52 Mbps unprotected DSOTS channel). Each node of a Custom Connect ring must be located at the same customer designated location or central office as its corresponding DSOTS node.

When point-to-point Custom Connect is provided over a Telephone Company provided DWDM backbone network, connection between the Custom Connect nodes is provided using a DWDM optical transport channel in lieu of Custom Connect transport. When Custom Connect configured in a ring topology is provided over a Telephone Company provided DWDM backbone network, connection between the SONET nodes (Custom Connect CO Nodes and/or SONET Premises Nodes) is provided using unprotected DWDM optical transport channels in lieu of Custom Connect transport. Since protection is inherent in the Custom Connect service, protection is not required on the DWDM optical transport channels.

Connection of Custom Connect configured in a ring topology to a Telephone Company provided DWDM ring is provided over an equal speed, unprotected optical transport channel (e.g., an OC3 Custom Connect node would connect to a 155.52 Mbps unprotected DWDM channel). Each node of a Custom Connect ring must be located at the same customer designated location or central office as its corresponding DWDM node.

The Shared Transport rate for Custom Connect Transport DS1 and DS3 bandwidth services apply to the transport facilities connected to Optical Custom Connect services.
Service availability limited. Refer to # footnote on Page 20-10.

© 2022 Frontier Communications Parent, Inc. All rights reserved.

ACCESS SERVICE

20. **Ethernet Private Line** (Cont'd)

(D) Application of Rates and Charges (Cont'd)

(j) Custom Connect# (Cont'd)

Rider

The Rider is the customer's service(s) traversing a higher bandwidth level. Riders may be provided at DS1, DS3, OC3, OC3c, OC12, OC12c, OC48, OC48c or STS1 bandwidth levels as required by the customer. DS1, DS3, and STS1 Riders may also be ordered in combination with Telephone Company provided point-to-point SONET service.

The Rider is provided at a flat-rated monthly recurring charge and is applicable per rider circuit order. A Rider is not charged with a CDL Link – Single or Diverse Route – Concatenated/Non-concatenated optical interface. The Rider charges for Express Connect or Flex Express Connect are included in their monthly rates.

Four fiber 1+1 protection consists of two cards in the add/drop multiplexer, one working card and a second, standby card to provide automatic protection from a fault in the working card. The four fiber 1+1 protection is available with all Telephone Company provided add/drop multiplexers and with compatible CPE and applies per CDL. When a Rider is ordered with four fiber 1+1 protection, the protection charge applies in addition to the charge for the Rider. Prior to December 28, 2002, the Telephone Company provided four fiber, 1+1 protection at no charge, upon request of the customer. Customers with those interface arrangements on their Riders are grandfathered as of December 28, 2002, and are not subject to the optional feature charge.

Intrastate riders may be transported on the customer's interstate Ethernet Private Line facility.

In jointly provided meet-point arrangements, rider charges apply in addition to other applicable charges when the Telephoney provides any Ocn mux node, whether provided at the customer premise or in the central office.

Acceptable rider speeds allowed by node type are as follows:

NOC3	OC12	OC48	OC192	
DS1 Rider	X	X*	X*	X*
DS3 Rider	X	X	X	X*
STS1 Rider	X	X	X	X
OC3/OC3c Rider		X	X	X
OC12/OC12c Rider			X	X
OC48/OC48c Rider				X

* This provision is only available from nodes that are technically capable of providing DS1 and DS3 drops directly from the OCn node terminal. The maximum capacity utilization that can be delivered by a OCn node selected by the customer may be limited by the number and type of riders that are provisioned on the OCn node and are limited by the maximum number of interfaces available to the OCn backplane. Where the OCn terminal is technically capable of supporting lower bandwidth OCn nodes as a sub-multiplexer, the Telephone Company may provide such at the customer premise and Central Office Node locations at the tariffed CO Node rates on a per sub-multiplexer node deployed.

Service availability limited. Refer to # footnote on Page 20-10.

© 2022 Frontier Communications Parent, Inc. All rights reserved.

ACCESS SERVICE

20. **Ethernet Private Line** (Cont'd)

(D) Application of Rates and Charges (Cont'd)

(j) Custom Connect# (Cont'd)

SONET Premises Node

The SONET Premises Node rate element applies at each CDL at which a SONET node is needed to complete a Custom Connect ring over an DSOTS backbone network. The functionality and capabilities of the SONET Premises Node are the same as those specified for the CO Node preceding. The SONET Premises Node will only be provided when Custom Connect is configured in a ring or point to point topology in which the transport between the nodes (CO Node and/or SONET Premises Nodes) is provided using DSOTS optical transport channels. DSOTS is described in Section 20.1 following. The SONET Premises Node applies in lieu of the Custom Connect CDL Link.

The SONET Premises Node rate element also applies at each CDL at which a SONET node is needed to complete a Custom Connect ring over a Telephone Company provided DWDM backbone network. The SONET Premises Node will only be provided when Custom Connect is configured in a ring or point to point topology in which the transport between the nodes (CO Node and/or SONET Premises Nodes) is provided using DWDM optical transport channels. The SONET Premises Node applies in lieu of the Custom Connect CDL Link.

The SONET Premises Node may be ordered under a three (3) year, five (5) year or seven (7) year TPP.

Service availability limited. Refer to # footnote on Page 20-10.

© 2022 Frontier Communications Parent, Inc. All rights reserved.

ACCESS SERVICE

20. **Ethernet Private Line** (Cont'd)

(D) Application of Rates and Charges (Cont'd)

(2) Optical Network Transport

The transport element provides for the interoffice Ethernet Private Line designated transport between wire centers on Telephone Company defined LANs. Each IC customer Connect must have its own transport. Transport cannot be shared among IC customer Connects.

Band SONET Transport may be purchased in DS0, DS1, DS3, OC3 or OC12 Bandwidths.

(a) Reserved for Future Use

(b) Reserved for Future Use

(c) Reserved for Future Use

(d) Reserved for Future Use

© 2022 Frontier Communications Parent, Inc. All rights reserved.

ACCESS SERVICE

20. **Ethernet Private Line** (Cont'd)

(D) Application of Rates and Charges (Cont'd)

(2) Optical Network Transport (Cont'd)

(e) Reserved for Future Use

(f) Banded Optical Transport# provides transport between the serving wire center of the interexchange access customer's location and the access customer's end user premises. Banded Optical Transport may be provided at DS0, DS1, DS3, OC3, STS1, OC12 or OC48 bandwidth levels as required by the customer. Wholly provided Banded Optical Transport may also be provided at OC3c, OC12c or OC48c bandwidth levels. When Banded Optical is ordered at a DS0 level, the customer must request a minimum of a DS1 interface at the IC customer wire center and will be charged the appropriate rider (i.e., DS1 or DS3). Banded Optical Transport is provided with a service guarantee as shown in Section 2.7.1.1. For subscription to Banded Optical Transport, the customer must have an accumulative demand requirement, whether provided pursuant to this Section 20 or as Telephone Company provided banded SONET transport, equivalent to an average of nine DS3s, i.e., 5,978 channels, per LATA, per state. The bandwidth will be reviewed annually at a mutually agreed upon date by the customer and the Company. An allowance of minus 2% will be considered as having met the commitment level. Should the bandwidth fall below minus 2%, the customer will have thirty (30) days to meet the bandwidth requirement. If not met, the customer will be notified by the Telephone Company and will be required to convert from Banded Optical Transport to another Optical Network Transport option.

Effective September 14, 2007, orders for new OCn Banded Optical Transport are no longer permitted. The Telephone Company will continue to provide OCn Banded Optical Transport pursuant to this Section 20 on any existing OCn Banded Optical Transport that is in-service as of September 14, 2007, or any order for OCn Banded Optical Transport that is placed with the Telephone Company prior to September 14, 2007 (collectively, Existing OCn Banded Optical Transport), subject to the following condition:

For any Existing OCn Banded Optical Transport that is currently subscribed to a term plan (i.e., commitment periods of 1-, 3-, 5- , and 7-years), the Telephone Company will continue to provide the Existing OCn Banded Optical Transport for an additional six (6) months beyond the expiration date of the customer's current commitment period, or until the customer replaces the Existing OCn Banded Optical Transport with a comparable Telephone Company provided service, or until the customer discontinues service, whichever occurs first. Orders to move, add, or change an Existing OCn Banded Optical Transport are not permitted.

© 2022 Frontier Communications Parent, Inc. All rights reserved.

ACCESS SERVICE

20. **Ethernet Private Line** (Cont'd)

(D) Application of Rates and Charges (Cont'd)

(2) Optical Network Transport (Cont'd)

(f) Banded Optical Transport# is provided at a flat-rated monthly charge for one (1) year, three (3) year, five (5) year, or seven (7) year contract periods. The contract period for Banded Optical Transport cannot exceed the contract period of the Connect. Banded Optical Transport includes the special access line from the end user serving wire center to the end user premises, for both on-net and off-net, with the exception of jointly provided Banded Optical Transport. Banded Optical Transport will be provisioned at the highest network facility available at the time of the order. The monthly rate will be determined based on the mileage between the serving wire centers of the customer designated locations and is applicable on a per circuit basis. Mileage will be rounded up to the next whole mile except when the CDLs are collocated.

When both customer designated locations are provided by the Telephone Company, wholly provided, the monthly rates as shown in 20(L)(37-46) are applicable. When one of the customer designated locations is provided by another telephone company, or the customer terminates at a multiplexer in a wire center on IOF, jointly provided, the monthly rates as shown in 20(L)(47-52) shall apply. For jointly provided transport with another telephone company, the meet point billing mileage calculation is specified in Section 2.7.3.

Service availability limited. Refer to # footnote on Page 20-18.

© 2022 Frontier Communications Parent, Inc. All rights reserved.

ACCESS SERVICE

20. **Ethernet Private Line** (Cont'd)

(D) Application of Rates and Charges (Cont'd)

(2) Optical Network Transport (Cont'd)

© 2022 Frontier Communications Parent, Inc. All rights reserved.

ACCESS SERVICE

20. **Ethernet Private Line** (Cont'd)

(D) Application of Rates and Charges (Cont'd)

(3) Reserved for Future Use

(E) Reserved for Future Use

(F) Reserved for Future Use

© 2022 Frontier Communications Parent, Inc. All rights reserved.

ACCESS SERVICE

20. **Ethernet Private Line** (Cont'd)

(G) Rate Regulations

Ethernet Private Line may be ordered under a one (1), three (3), five (5), or seven (7) year Term Payment Plan (TPP). Any TPP for these services is subject to an TPP Termination Liability Charge as specified herein.

When ordered together the TPP applies to Connects, Banded Optical Transport and Additional Nodes.

(1) Changes in Length of a TPP

Prior to the expiration of a TPP period, the customer may elect to convert to a new TPP period of the same or different length, subject to the following conditions:

- No credit will be given for the new period for payments made under the TPP arrangement.
- will not be reapplied for existing services.
- If the new TPP period is shorter in length than the time remaining under the existing TPP, the change to the new TPP period constitutes a disconnect of the existing TPP service and termination liability charges will apply.
- The rates for the new period will be the rates currently in effect at the time of the change.
- If the customer subscribes to a new TPP which is greater in length than the initial TPP term and discontinues one or all of the service elements prior to the expiration of the new termination liability period, the termination liability, as set forth below, will apply based on the remainder of the TPP period in effect at the time of the disconnect.

Year in which Service Is Discontinued	Liability Rate
1	100%
2	75%
3	50%
4 or more	25%

© 2022 Frontier Communications Parent, Inc. All rights reserved.

ACCESS SERVICE

20. **Ethernet Private Line** (Cont'd)

(G) Rate Regulations (Cont'd)

(2) Renewal Options

Ninety (90) days prior to the expiration of the existing TPP, the customer shall submit in writing to select a new TPP or disconnect service. If no notice is received, the Company will automatically reconnect the customer to a new TPP with the same term life as the previous.

After completion of the initial TPP term and the customer subscribes to a new term that is longer in length the termination liability, as set forth below, will apply based on the remainder of the TPP period in effect at the time of the disconnect.

Year in which Service Is Discontinued	Liability Rate
1	20%
2	15%
3	10%
4 or more	5%

© 2022 Frontier Communications Parent, Inc. All rights reserved.

ACCESS SERVICE

20. **Ethernet Private Line** (Cont'd)

(G) Rate Regulations (Cont'd)

(3) Conversion

When an existing customer purchases Ethernet Private Line, the customer may upgrade their existing special access services to Ethernet Private Line. The upgrade may require physical network changes, as well as changes to existing billing arrangements. Physical changes consist of reterminating existing services not currently utilizing the Optical network.

Termination liability charges will not apply to the customer's existing services provided the Ethernet Private Line TPP term commitment agreement is equal to or longer in length than the time remaining for the existing arrangement.

(4) Rate Changes

The TPP rates are exempt from Telephone Company initiated increases for the length of the plan, however, decreases will be passed on to the customer. Rate changes may occur as a result of FCC action.

(5) Termination Liability

In the event the customer discontinues one or all of the service elements (Connect, Banded Optical Transport, Additional Node) prior to the end of the initial termination liability period, termination liability charges, as set forth below, will apply based on the remainder of the TPP period in effect at the time of the disconnect.

Year in which Service Is Discontinued	Liability Rate
1	40%
2	35%
3	30%
4 or more	25%

(6) Termination Without Liability

For Banded Optical Transport, termination charges will not apply when the customer disconnects a DS0 or DS1 on a circuit by circuit basis provided the required accumulative bandwidth is met as shown in 20(D)(2)(f).

© 2022 Frontier Communications Parent, Inc. All rights reserved.

ACCESS SERVICE

20. **Ethernet Private Line** (Cont'd)

(G) Rate Regulations (Cont'd)

(7) Upgrade to Higher Bandwidth

The Customer who has grown incrementally, may elect to upgrade service to a higher bandwidth during an TPP period to gain economic efficiencies. Termination charges will not apply as long as the upgraded service remains connected at the same points of termination unless the network is being redesigned to gain network efficiency. Nonrecurring charges associated with the new bandwidth upgrade shall apply.

(8) The Customer may elect to change service from a 2-fiber interface to a 4-fiber interface during a TPP. Termination charges will not apply as long as the changed service remains at the same point of termination(s).

(H) Off-Net Wire Center

Off-Net wire center is a wire center not a designated Ethernet Private Line wire center office. The customer may order a DS0, DS1, DS3 or E1 to the Off-Net wire center. Mileage charges will be determined based on airline miles to the nearest on-net wire center at the transport rates shown in Section 7.

Circuits connected to the Off-Net wire center will be billed existing tariffed rates as shown in Section 7.

(I) Shared Use

Shared Use is the provisioning of Switched Access over Ethernet Private Line. Rating as Ethernet Private Line will continue until such time as a portion of the available Ethernet Private Line capacity is used to provide Switched Access service.

For shared use, a special access DS3 interface must be ordered between the IC customer and the IC customer wire center. When switched trunks are ordered, a DS1 switched interface must be ordered for the switched trunks. A DS3 or DS1 interface ordered as Switched Access will be used exclusively for Switched Access.

As individual channels are activated for Switched Access, monthly charges will be adjusted between Switched Access and Ethernet Private Line Access based on the number of channels used for Switched Access and the remaining Ethernet Private Line Access facility.

The total Shared Use for Switched Access charge is equal to the number of channels used for Switched Access divided by 24 for DS1 or 672 for DS3 times the Monthly Switched Access Charges. The monthly Switched Access rates used will be the current rates for Switched Access Entrance Facility, Direct-Trunked Transport Facility, Direct-Trunked Transport Termination and Multiplexer.

© 2022 Frontier Communications Parent, Inc. All rights reserved.

ACCESS SERVICE

20. **Ethernet Private Line** (Cont'd)

(I) Shared Use (Cont'd)

Following is an example of how Shared Use will apply to Ethernet Private Line.

Single Route OC3 Connect - Electrical	$4,100.00
Point-to-Point Transport - OC1 (10 Miles X $160.00)	1,600.00
DS3 CO Connect	130.00
DS3 Payload	160.00
Total SONET Monthly Recurring Charge	$5,990.00

Customer wants to utilize 850 channels for Switched Access DS3 with 10 miles of transport.

850/672 = 1.2 DS3s

DS3 Direct-Trunked Transport Facility	= $67.44 X 10 =	$674.40
DS3 Direct-Trunked Transport Termination	=	190.46
DS3 Entrance Facility	=	1,263.67
Total Monthly Rate per DS3		$2,1278.53

$2,128.53 X 1.2 DS3s = $2,554.23 Switched Access Shared Use Monthly Rate

SONET Monthly Recurring Charge	$5,990.00
Switched Access Shared Use	-2,554.23
SONET Monthly Charge	$3,435.77

SONET Monthly Charge	$3,435.77
Switched Access Shared Use	+2,554.23
Total Monthly Billing	$5,990.00

(J) (Reserved for Future Use)

© 2022 Frontier Communications Parent, Inc. All rights reserved.

ACCESS SERVICE

20. **Ethernet Private Line** (Cont'd)

(K) Reserved for Future Use

© 2022 Frontier Communications Parent, Inc. All rights reserved.

ACCESS SERVICE

20. **Ethernet Private Line** (Cont'd)

(L) Rates and Charges

(1) Reserved for Future Use

© 2022 Frontier Communications Parent, Inc. All rights reserved.

ACCESS SERVICE

20. **Ethernet Private Line** (Cont'd)

(L) Rates and Charges (Cont'd)

(2) Reserved for Future Use

© 2022 Frontier Communications Parent, Inc. All rights reserved.

ACCESS SERVICE

20. **Ethernet Private Line** (Cont'd)

(L) Rates and Charges (Cont'd)

(3) Reserved for Future Use

© 2022 Frontier Communications Parent, Inc. All rights reserved.

ACCESS SERVICE

20. **Ethernet Private Line** (Cont'd)

(L) Rates and Charges (Cont'd)

(4) Reserved for Future Use

© 2022 Frontier Communications Parent, Inc. All rights reserved.

ACCESS SERVICE

20. **Ethernet Private Line** (Cont'd)

(L) Rates and Charges (Cont'd)

(5) Reserved for Future Use

© 2022 Frontier Communications Parent, Inc. All rights reserved.

ACCESS SERVICE

20. **Ethernet Private Line** (Cont'd)

(L) Rates and Charges (Cont'd)

(6) Reserved for Future Use

© 2022 Frontier Communications Parent, Inc. All rights reserved.

ACCESS SERVICE

20. **Ethernet Private Line** (Cont'd)

(L) Rates and Charges (Cont'd)

(7) Reserved for Future Use

© 2022 Frontier Communications Parent, Inc. All rights reserved.

ACCESS SERVICE

20. **Ethernet Private Line** (Cont'd)

(L) Rates and Charges (Cont'd)

(8) Express Connect # - First System

	One Year Monthly Rate	Three Year Monthly Rate	Five Year Monthly Rate	Seven Year Monthly Rate
OC3	$ 7,700.00	$ 6,800.00	$ 6,300.00	$ 6,200.00
OC12	13,000.00	12,100.00	11,400.00	11,300.00
OC48	27,625.00	27,125.00	26,750.00	26,350.00

Express Connect # - Additional System

	One Year Monthly Rate	Three Year Monthly Rate	Five Year Monthly Rate	Seven Year Monthly Rate
(OC3	$1,100.00	$1,100.00	$1,100.00	$1,100.00
OC12	2,400.00	2,330.00	2,100.00	2,100.00
OC48	9,135.00	9,000.00	9,000.00	9,000.00

Service availability limited. Refer to # footnote on Page 20-7.

© 2022 Frontier Communications Parent, Inc. All rights reserved.

ACCESS SERVICE

20. **Ethernet Private Line** (Cont'd)

(L) Rates and Charges (Cont'd)

(9) Flex Express Connect # - First System

	One Year Monthly Rate	Three Year Monthly Rate	Five Year Monthly Rate	Seven Year Monthly Rate
OC3	$11,500.00	$10,200.00	$ 9,550.00	$ 9,450.00
OC12	18,800.00	17,600.00	16,700.00	16,600.00
OC48	33,425.00	33,100.00	32,700.00	32,700.00

Flex Express Connect # - Additional System

	One Year Monthly Rate	Three Year Monthly Rate	Five Year Monthly Rate	Seven Year Monthly Rate
OC3	$1,200.00	$1,200.00	$1,200.00	$1,200.00
OC12	2,300.00	2,300.00	2,100.00	2,100.00
OC48	11,316.00	11,316.00	11,316.00	11,316.00

Service availability limited. Refer to # footnote on Page 20-8.

© 2022 Frontier Communications Parent, Inc. All rights reserved.

ACCESS SERVICE

20. **Ethernet Private Line** (Cont'd)

(L) Rates and Charges (Cont'd)

(10) Express and Flex Express # - Additional CDL Node

	Monthly Rate
OC3	$ 3,600.00
OC12	6,000.00
OC48	12,945.00

	One Year Monthly Rate	Three Year Monthly Rate	Five Year Monthly Rate	Seven Year Monthly Rate
OC3	$ 3,300.00	$ 3,300.00	$ 3,300.00	$ 3,300.00
OC12	5,900.00	5,800.00	5,450.00	5,450.00
OC48	11,945.00	11,945.00	11,945.00	11,945.00

Service availability limited. Refer to # footnotes on Pages 20-7 and 20-8.

© 2022 Frontier Communications Parent, Inc. All rights reserved.

ACCESS SERVICE

20. **Ethernet Private Line** (Cont'd)

(L) Rates and Charges (Cont'd)

(11) Express and Flex Express # - Additional CO Node

	Monthly Rate
OC3	$2,500.00
OC12	3,500.00
OC48	9,130.00

	One Year Monthly Rate	Three Year Monthly Rate	Five Year Monthly Rate	Seven Year Monthly Rate
OC3	$2,200.00	$2,200.00	$2,200.00	$2,200.00
OC12	3,425.00	3,350.00	3,100.00	3,100.00
OC48	8,130.00	8,130.00	8,130.00	8,130.00

Service availability limited. Refer to # footnotes on Pages 20-7 and 20-8.

© 2022 Frontier Communications Parent, Inc. All rights reserved.

ACCESS SERVICE

20. **Ethernet Private Line** (Cont'd)

(L) Rates and Charges (Cont'd)

(12) Flex Express # - First System Transport

	Monthly Rate Per Mile
OC3	$170.00
OC12	240.00

Flex Express # - Additional System Transport

	Monthly Rate Per Mile
OC3	$ 25.00
OC12	45.00

Express and Flex Express # – First System Transport

	Monthly Rate Per Mile
OC48	$500.00

Express and Flex Express # - Additional System Transport

	Monthly Rate Per Mile
OC48	$100.00

Service availability limited. Refer to # footnotes on Pages 20-7 and 20-8.

© 2022 Frontier Communications Parent, Inc. All rights reserved.

ACCESS SERVICE

20. **Ethernet Private Line** (Cont'd)

(L) Rates and Charges (Cont'd)

(13) Custom Connect - CO Node#

	Nonrecurring Charge	One Year Monthly Rate
OC3	$1,500.00	$ 1,000.00
OC12	3,000.00	2,250.00
OC48	3,000.00	4,500.00
OC192	6,000.00	11,250.00

	Three Year Monthly Rate	Five Year Monthly Rate	Seven Year Monthly Rate
OC3	$ 900.00	$ 850.00	$ 800.00
OC12	2,150.00	2,050.00	1,975.00
OC48	4,300.00	4,100.00	3,900.00
OC192	10,750.00	10,250.00	9,750.00

Service availability limited. Refer to # footnote on Page 20-10.

© 2022 Frontier Communications Parent, Inc. All rights reserved.

ACCESS SERVICE

20. **Ethernet Private Line** (Cont'd)

(L) Rates and Charges (Cont'd)

(14) Custom Connect – SONET Premises Nodes- DSOTS#

	Nonrecurring Charge	Three Year Monthly Rate	Five Year Monthly Rate	Seven Year Monthly Rate
OC3	$1.00	$ 900.00	$ 850.00	$ 800.00
OC12	1.00	2,150.00	2,050.00	1,975.00
OC48	1.00	4,300.00	4,100.00	3,900.00

Service availability limited. Refer to # footnote on Page 20-10.

© 2022 Frontier Communications Parent, Inc. All rights reserved.

ACCESS SERVICE

20. **Ethernet Private Line** (Cont'd)

(L) Rates and Charges (Cont'd)

(15) Custom Connect - CDL Link - Single Route with Premise Multiplexer Provided#

	Nonrecurring Charge	One Year Monthly Rate
OC3	$ 3,000.00	$ 1,075.00
OC12	6,000.00	2,550.00
OC48	6,000.00	4,450.00
OC192	12,000.00	11,625.00

	Three Year Monthly Rate	Five Year Monthly Rate	Seven Year Monthly Rate
OC3	$ 1,000.00	$ 950.00	$ 900.00
OC12	2,400.00	2,200.00	2,050.00
OC48	4,100.00	3,900.00	3,700.00
OC192	11,200.00	11,000.00	10,900.00

Service availability limited. Refer to # footnote on Page 20-10.

© 2022 Frontier Communications Parent, Inc. All rights reserved.

ACCESS SERVICE

20. **Ethernet Private Line** (Cont'd)

(L) Rates and Charges (Cont'd)

(16) Custom Connect - CDL Link - Single Route with Premise Fiber Meet Provided#

	Nonrecurring Charge	One Year Monthly Rate
OC3	$1,500.00	$650.00
OC12	1,500.00	650.00
OC48	1,500.00	650.00
OC192	1,500.00	700.00

	Three Year Monthly Rate	Five Year Monthly Rate	Seven Year Monthly Rate
OC3	$620.00	$600.00	$580.00
OC12	620.00	600.00	580.00
OC48	620.00	600.00	580.00
OC192	650.00	620.00	600.00

Service availability limited. Refer to # footnote on Page 20-10.

© 2022 Frontier Communications Parent, Inc. All rights reserved.

ACCESS SERVICE

20. **Ethernet Private Line** (Cont'd)

(L) Rates and Charges (Cont'd)

(17) Custom Connect - CDL Link - Single Route – Concatenated/Non-concatenated#

	Nonrecurring Charge	One Year Monthly Rate
OC3c/OC3	$6,000.00	$ 3,300.00
OC12c/OC12	6,000.00	6,700.00
OC48c/OC48	6,000.00	12,500.00

	Three Year Monthly Rate	Five Year Monthly Rate	Seven Year Monthly Rate
OC3c/OC3	$ 3,150.00	$ 2,950.00	$ 2,800.00
OC12c/OC12	6,350.00	6,150.00	5,950.00
OC48c/OC48	12,250.00	12,000.00	11,750.00

Service availability limited. Refer to # footnote on Page 20-10.

© 2022 Frontier Communications Parent, Inc. All rights reserved.

ACCESS SERVICE

20. **Ethernet Private Line** (Cont'd)

(L) Rates and Charges (Cont'd)

(18) Custom Connect - CDL Link - Diverse Route with Premise Multiplexer Provided#

	Nonrecurring Charge	One Year Monthly Rate
OC3	$ 3,000.00	$ 1,790.00
OC12	6,000.00	3,175.00
OC48	6,000.00	5,100.00
OC192	12,000.00	13,125.00

	Three Year Monthly Rate	Five Year Monthly Rate	Seven Year Monthly Rate
OC3	$ 1,700.00	$ 1,650.00	$ 1,600.00
OC12	2,900.00	2,775.00	2,650.00
OC48	4,800.00	4,575.00	4,375.00
OC192	12,400.00	11,550.00	11,000.00

Service availability limited. Refer to # footnote on Page 20-10.

© 2022 Frontier Communications Parent, Inc. All rights reserved.

ACCESS SERVICE

20. **Ethernet Private Line** (Cont'd)

(L) Rates and Charges (Cont'd)

(19) Custom Connect - CDL Link - Diverse Route with Premise Fiber Meet Provided#

	Nonrecurring Charge	One Year Monthly Rate
OC3	$3,000.00	$1,200.00
OC12	3,000.00	1,200.00
OC48	3,000.00	1,200.00
OC192	3,000.00	1,300.00

	Three Year Monthly Rate	Five Year Monthly Rate	Seven Year Monthly Rate
OC3	$1,165.00	$1,125.00	$1,100.00
OC12	1,165.00	1,125.00	1,100.00
OC48	1,165.00	1,125.00	1,100.00
OC192	1,250.00	1,220.00	1,200.00

Service availability limited. Refer to # footnote on Page 20-10.

© 2022 Frontier Communications Parent, Inc. All rights reserved.

ACCESS SERVICE

20. **Ethernet Private Line** (Cont'd)

(L) Rates and Charges (Cont'd)

(20) Custom Connect - CDL Link - Diverse Route – Concatenated/Non-concatenated#

	Nonrecurring Charge	One Year Monthly Rate
OC3c/OC3	$6,000.00	$ 3,925.00
OC12c/OC12	6,000.00	7,350.00
OC48c/OC48	6,000.00	13,200.00

	Three Year Monthly Rate	Five Year Monthly Rate	Seven Year Monthly Rate
OC3c/OC3	$ 3,650.00	$ 3,525.00	$ 3,400.00
OC12c/OC12	7,050.00	6,825.00	6,625.00
OC48c/OC48	13,000.00	12,500.00	12,250.00

Service availability limited. Refer to # footnote on Page 20-10.

© 2022 Frontier Communications Parent, Inc. All rights reserved.

ACCESS SERVICE

20. **Ethernet Private Line** (Cont'd)

(L) Rates and Charges (Cont'd)

(21) Custom Connect - CDL Link - Ring Route with Premise Multiplexer Provided #

	Nonrecurring Charge	One Year Monthly Rate
OC3	$ 3,000.00	$ 2,520.00
OC12	6,000.00	3,950.00
OC48	6,000.00	5,750.00
OC192	12,000.00	15,625.00

	Three Year Monthly Rate	Five Year Monthly Rate	Seven Year Monthly Rate
OC3	$ 2,450.00	$ 2,400.00	$ 2,350.00
OC12	3,800.00	3,650.00	3,475.00
OC48	5,500.00	5,250.00	5,000.00
OC192	14,900.00	14,050.00	13,500.00

Service availability limited. Refer to # footnote on Page 20-10.

© 2022 Frontier Communications Parent, Inc. All rights reserved.

ACCESS SERVICE

20. **Ethernet Private Line** (Cont'd)

(L) Rates and Charges (Cont'd)

(22) Custom Connect - CDL Link - Ring Route with Premise Fiber Meet Provided #

	Nonrecurring Charge	One Year Monthly Rate
OC3	$3,000.00	$2,045.00
OC12	3,000.00	2,045.00
OC48	3,000.00	2,045.00
OC192	3,000.00	2,300.00

	Three Year Monthly Rate	Five Year Monthly Rate	Seven Year Monthly Rate
OC3	$2,020.00	$1,995.00	$1,970.00
OC12	2,020.00	1,995.00	1,970.00
OC48	2,020.00	1,995.00	1,970.00
OC192	2,250.00	2,220.00	2,200.00

Service availability limited. Refer to # footnote on Page 20-10.

© 2022 Frontier Communications Parent, Inc. All rights reserved.

ACCESS SERVICE

20. **Ethernet Private Line** (Cont'd)

(L) Rates and Charges (Cont'd)

(23) Custom Connect - CDL Link - Single Route#

	Nonrecurring Charge	One Year Monthly Rate
1.25 Gbps	$6,000.00	$3,570.00
2.5 Gbps	6,000.00	4,230.00

	Three Year Monthly Rate	Five Year Monthly Rate	Seven Year Monthly Rate
1.25 Gbps	$3,450.00	$3,330.00	$3,210.00
2.5 Gbps	4,110.00	3,990.00	3,870.00

Service availability limited. Refer to # footnote on Page 20-10.

© 2022 Frontier Communications Parent, Inc. All rights reserved.

ACCESS SERVICE

20. **Ethernet Private Line** (Cont'd)

(L) Rates and Charges (Cont'd)

(24) Custom Connect - CDL Link - Diverse Route#

	Nonrecurring Charge	One Year Monthly Rate
1.25 Gbps	$6,000.00	$3,835.00
2.5 Gbps	6,000.00	4,595.00

	Three Year Monthly Rate	Five Year Monthly Rate	Seven Year Monthly Rate
1.25 Gbps	$3,730.00	$3,625.00	$3,525.00
2.5 Gbps	4,485.00	4,375.00	4,265.00

Service availability limited. Refer to # footnote on Page 20-10.

© 2022 Frontier Communications Parent, Inc. All rights reserved.

ACCESS SERVICE

20. **Ethernet Private Line** (Cont'd)

(L) Rates and Charges (Cont'd)

(25) Custom Connect - CDL Link - Single Route with Optical Cross Connect #

	Nonrecurring Charge	One Year Monthly Rate
OC3/OC3c	$1,000.00	$ 715.00
OC12/OC12c	2,500.00	1,640.00
OC48/OC48c	2,500.00	3,450.00
OC192	2,500.00	7,250.00

	Three Year Monthly Rate	Five Year Monthly Rate	Seven Year Monthly Rate
OC3/OC3c	$ 690.00	$ 675.00	$ 650.00
OC12/OC12c	1,590.00	1,550.00	1,500.00
OC48/OC48c	3,350.00	3,275.00	3,150.00
OC192	7,025.00	6,850.00	6,625.00

Service availability limited. Refer to # footnote on Page 20-10.

© 2022 Frontier Communications Parent, Inc. All rights reserved.

ACCESS SERVICE

20. **Ethernet Private Line** (Cont'd)

(L) Rates and Charges (Cont'd)

(26) Custom Connect - Rider

	Monthly Rate
DS1	$ 75.00
DS3	250.00
STS1	240.00
OC3/OC3c	750.00#
OC12/OC12c	2,250.00#
OC48/OC48c	4,500.00#

Service availability limited. Refer to # footnote on Page 20-10.

© 2022 Frontier Communications Parent, Inc. All rights reserved.

ACCESS SERVICE

20. **Ethernet Private Line** (Cont'd)

(L) Rates and Charges (Cont'd)

(27) Custom Connect – Optional 4 Fiber, 1+1 Protection#

	Monthly Rate, Per CDL
OC3c/OC3	$ 375.00
OC12c/OC12	1,125.00
OC48c/OC48	2,250.00

Service availability limited. Refer to # footnote on Page 20-10.

© 2022 Frontier Communications Parent, Inc. All rights reserved.

ACCESS SERVICE

20. **Ethernet Private Line** (Cont'd)

(L) Rates and Charges (Cont'd)

(28) Custom Connect - Shared Transport

	Per Mile Monthly Rate
DS1	$ 12.00
DS3/STS1	100.00
OC3/OC3c	210.00#
OC12/OC12c	450.00#
OC48/OC48c	1,125.00#

Service availability limited. Refer to # footnote on Page 20-10.

© 2022 Frontier Communications Parent, Inc. All rights reserved.

ACCESS SERVICE

20. **Ethernet Private Line** (Cont'd)

(L) Rates and Charges (Cont'd)

(29) Custom Connect – Dedicated Transport #

	Per Mile Monthly Rate
OC3/OC3c	$170.00
OC12/OC12c	240.00
OC48/OC48c	370.00
OC192	550.00
1.25 Gbps	295.00
2.5 Gbps	370.00

Service availability limited. Refer to # footnote on Page 20-10.

© 2022 Frontier Communications Parent, Inc. All rights reserved.

ACCESS SERVICE

20. **Ethernet Private Line** (Cont'd)

(L) Rates and Charges (Cont'd)

(30) Reserved for Future Use

© 2022 Frontier Communications Parent, Inc. All rights reserved.

ACCESS SERVICE

20. **Ethernet Private Line** (Cont'd)

(L) Rates and Charges (Cont'd)

(31) Reserved for Future Use

© 2022 Frontier Communications Parent, Inc. All rights reserved.

ACCESS SERVICE

20. **Ethernet Private Line** (Cont'd)

(L) Rates and Charges (Cont'd)

(32) Reserved for Future Use

© 2022 Frontier Communications Parent, Inc. All rights reserved.

ACCESS SERVICE

20. **Ethernet Private Line** (Cont'd)

(L) Rates and Charges (Cont'd)

(33) Reserved for Future Use

© 2022 Frontier Communications Parent, Inc. All rights reserved.

ACCESS SERVICE

20. **Ethernet Private Line** (Cont'd)

(L) Rates and Charges (Cont'd)

(34) Reserved for Future Use

© 2022 Frontier Communications Parent, Inc. All rights reserved.

ACCESS SERVICE

20. **Ethernet Private Line** (Cont'd)

(L) Rates and Charges (Cont'd)

(35) Reserved for Future Use

© 2022 Frontier Communications Parent, Inc. All rights reserved.

ACCESS SERVICE

20. **Ethernet Private Line** (Cont'd)

(L) Rates and Charges (Cont'd)

(36) Reserved for Future Use

© 2022 Frontier Communications Parent, Inc. All rights reserved.

ACCESS SERVICE

20. **Ethernet Private Line** (Cont'd)

(L) Rates and Charges (Cont'd)

(37) Transport - Banded Optical - DS0 (Wholly Provided)

	One Year Monthly Rate	Three Year Monthly Rate
0 miles	$ 100.00	$93.00
1 - 10 miles	102.00	95.00
11 - 20 miles	104.00	97.00
21 + miles	106.00	99.00

	Five Year Monthly Rate	Seven Year Monthly Rate
0 miles	$ 90.00	$87.00
1 - 10 miles	92.00	89.00
11 - 20 miles	94.00	91.00
21 + miles	96.00	93.00

© 2022 Frontier Communications Parent, Inc. All rights reserved.

ACCESS SERVICE

20. **Ethernet Private Line** (Cont'd)

(L) Rates and Charges (Cont'd)

(38) Transport - Banded Optical – DS1 (Wholly Provided)

	One Year Monthly Rate	Three Year Monthly Rate
0 miles	$ 205.00	$191.00
1 - 10 miles	285.00	268.00
11 - 20 miles	305.00	304.00
21 + miles	350.00	312.00

	Five Year Monthly Rate	Seven Year Monthly Rate
0 miles	$ 185.00	$173.00
1 - 10 miles	260.00	245.00
11 - 20 miles	295.00	258.00
21 + miles	300.00	281.00

© 2022 Frontier Communications Parent, Inc. All rights reserved.

ACCESS SERVICE

20. **Ethernet Private Line** (Cont'd)

(L) Rates and Charges (Cont'd)

(39) Transport - Banded Optical – DS3 (Wholly Provided)

	One Year Monthly Rate	Three Year Monthly Rate
0 miles	$1,800.00	$1,700.00
1 - 10 miles	2,600.00	2,550.00
11 - 20 miles	4,000.00	3,800.00
21 + miles	5,200.00	4,900.00

	Five Year Monthly Rate	Seven Year Monthly Rate
0 miles	$1,600.00	$1,500.00
1 - 10 miles	2,350.00	2,200.00
11 - 20 miles	3,500.00	3,200.00
21 + miles	4,600.00	4,300.00

© 2022 Frontier Communications Parent, Inc. All rights reserved.

ACCESS SERVICE

20. **Ethernet Private Line** (Cont'd)

(L) Rates and Charges (Cont'd)

(40) Transport - Banded Optical# – OC3 (Wholly Provided)

	One Year Monthly Rate	Three Year Monthly Rate
0 miles	$ 3,200.00	$ 2,850.00
1 - 10 miles	4,950.00	4,450.00
11 - 20 miles	8,500.00	7,550.00
21 + miles	12,000.00	10,700.00

	Five Year Monthly Rate	Seven Year Monthly Rate
0 miles	$ 2,750.00	$ 2,650.00
1 - 10 miles	4,300.00	4,200.00
11 - 20 miles	7,300.00	7,100.00
21 + miles	10,300.00	9,900.00

Service availability limited. Refer to # footnote on Page 20-18.

© 2022 Frontier Communications Parent, Inc. All rights reserved.

ACCESS SERVICE

20. **Ethernet Private Line** (Cont'd)

(L) Rates and Charges (Cont'd)

(41) Transport - Banded Optical# – OC3c (Wholly Provided)

	One Year Monthly Rate	Three Year Monthly Rate
0 miles	$ 5,250.00	$ 4,750.00
1 - 10 miles	6,100.00	5,600.00
11 - 20 miles	7,800.00	7,300.00
21 + miles	9,500.00	9,000.00

	Five Year Monthly Rate	Seven Year Monthly Rate
0 miles	$ 4,550.00	$ 4,350.00
1 - 10 miles	5,400.00	5,200.00
11 - 20 miles	7,100.00	6,900.00
21 + miles	8,800.00	8,600.00

Service availability limited. Refer to # footnote on Page 20-18.

© 2022 Frontier Communications Parent, Inc. All rights reserved.

ACCESS SERVICE

20. **Ethernet Private Line** (Cont'd)

(L) Rates and Charges (Cont'd)

(42) Transport - Banded Optical# – OC12 (Wholly Provided)

	One Year Monthly Rate	Three Year Monthly Rate
0 miles	$ 5,250.00	$ 4,750.00
1 - 10 miles	8,000.00	7,230.00
11 - 20 miles	13,000.00	12,000.00
21 + miles	18,300.00	17,000.00

	Five Year Monthly Rate	Seven Year Monthly Rate
0 miles	$ 4,550.00	$ 4,350.00
1 - 10 miles	6,980.00	6,780.00
11 - 20 miles	11,600.00	11,200.00
21 + miles	16,500.00	16,000.00

Service availability limited. Refer to # footnote on Page 20-18.

© 2022 Frontier Communications Parent, Inc. All rights reserved.

ACCESS SERVICE

20. **Ethernet Private Line** (Cont'd)

(L) Rates and Charges (Cont'd)

(43) Transport - Banded Optical# – OC12c (Wholly Provided)

	One Year Monthly Rate	Three Year Monthly Rate
0 miles	$10,700.00	$10,100.00
1 - 10 miles	11,900.00	11,300.00
11 - 20 miles	14,300.00	13,700.00
21 + miles	16,700.00	16,100.00

	Five Year Monthly Rate	Seven Year Monthly Rate
0 miles	$ 9,500.00	$ 9,000.00
1 - 10 miles	10,700.00	10,200.00
11 - 20 miles	13,100.00	12,600.00
21 + miles	15,500.00	15,000.00

Service availability limited. Refer to # footnote on Page 20-18.

© 2022 Frontier Communications Parent, Inc. All rights reserved.

ACCESS SERVICE

20. **Ethernet Private Line** (Cont'd)

(L) Rates and Charges (Cont'd)

(44) Transport - Banded Optical – STS1 (Wholly Provided)

	One Year Monthly Rate	Three Year Monthly Rate
0 miles	$1,800.00	$1,700.00
1 - 10 miles	2,600.00	2,550.00
11 - 20 miles	4,000.00	3,800.00
21 + miles	5,200.00	4,900.00

	Five Year Monthly Rate	Seven Year Monthly Rate
0 miles	$ 1,600.00	$1,500.00
1 - 10 miles	2,350.00	2,200.00
11 - 20 miles	3,500.00	3,200.00
21 + miles	4,600.00	4,300.00

© 2022 Frontier Communications Parent, Inc. All rights reserved.

ACCESS SERVICE

20. **Ethernet Private Line** (Cont'd)

(L) Rates and Charges (Cont'd)

(45) Transport - Banded Optical# – OC48 (Wholly Provided)

	One Year Monthly Rate	Three Year Monthly Rate
0 miles	$ 7,365.00	$ 7,200.00
1 - 10 miles	10,600.00	10,200.00
11 - 20 miles	17,070.00	16,800.00
21 + miles	23,545.00	23,200.00

	Five Year Monthly Rate	Seven Year Monthly Rate
0 miles	$ 7,100.00	$ 7,000.00
1 - 10 miles	10,000.00	9,800.00
11 - 20 miles	16,500.00	16,200.00
21 + miles	23,000.00	22,800.00

Service availability limited. Refer to # footnote on Page 20-18.

© 2022 Frontier Communications Parent, Inc. All rights reserved.

ACCESS SERVICE

20. **Ethernet Private Line** (Cont'd)

(L) Rates and Charges (Cont'd)

(46) Transport - Banded Optical# – OC48c (Wholly Provided)

	One Year Monthly Rate	Three Year Monthly Rate
0 miles	$10,750.00	$10,500.00
1 - 10 miles	20,350.00	20,100.00
11 - 20 miles	29,370.00	29,100.00
21 + miles	38,390.00	38,100.00

	Five Year Monthly Rate	Seven Year Monthly Rate
0 miles	$10,250.00	$10,000.00
1 - 10 miles	19,900.00	19,600.00
11 - 20 miles	28,900.00	28,600.00
21 + miles	37,900.00	37,600.00

Service availability limited. Refer to # footnote on Page 20-18.

© 2022 Frontier Communications Parent, Inc. All rights reserved.

ACCESS SERVICE

20. **Ethernet Private Line** (Cont'd)

(L) Rates and Charges (Cont'd)

(47) Transport - Banded Optical – DS0 (Jointly Provided)

	One Year Monthly Rate	Three Year Monthly Rate
1 - 10 miles	$ 9.50	$ 8.50
11 - 20 miles	11.25	10.25
21 + miles	14.25	13.25

	Five Year Monthly Rate	Seven Year Monthly Rate
1 - 10 miles	$ 8.25	$ 8.00
11 - 20 miles	10.00	9.75
21 + miles	12.75	12.50

© 2022 Frontier Communications Parent, Inc. All rights reserved.

ACCESS SERVICE

20. **Ethernet Private Line** (Cont'd)

(L) Rates and Charges (Cont'd)

(48) Transport - Banded Optical – DS1 (Jointly Provided)

	One Year Monthly Rate	Three Year Monthly Rate
1 - 10 miles	$ 78.00	$ 72.50
11 - 20 miles	110.00	105.00
21 + miles	150.00	143.00

	Five Year Monthly Rate	Seven Year Monthly Rate
1 - 10 miles	$ 68.00	$ 64.00
11 - 20 miles	101.00	94.00
21 + miles	135.00	126.00

© 2022 Frontier Communications Parent, Inc. All rights reserved.

ACCESS SERVICE

20. **Ethernet Private Line** (Cont'd)

(L) Rates and Charges (Cont'd)

(49) Transport - Banded Optical – DS3 (Jointly Provided)

	One Year Monthly Rate	Three Year Monthly Rate
1 - 10 miles	$ 750.00	$ 675.00
11 - 20 miles	2,200.00	2,025.00
21 + miles	3,700.00	3,400.00

	Five Year Monthly Rate	Seven Year Monthly Rate
1 - 10 miles	$ 625.00	$ 575.00
11 - 20 miles	1,920.00	1,815.00
21 + miles	3,100.00	2,900.00

© 2022 Frontier Communications Parent, Inc. All rights reserved.

ACCESS SERVICE

20. **Ethernet Private Line** (Cont'd)

(L) Rates and Charges (Cont'd)

(50) Transport - Banded Optical# – OC3 (Jointly Provided)

	One Year Monthly Rate	Three Year Monthly Rate
1 - 10 miles	$1,600.00	$1,500.00
11 - 20 miles	4,900.00	4,500.00
21 + miles	8,100.00	7,500.00

	Five Year Monthly Rate	Seven Year Monthly Rate
1 - 10 miles	$1,450.00	$1,400.00
11 - 20 miles	4,300.00	4,100.00
21 + miles	7,250.00	7,000.00

Service availability limited. Refer to # footnote on Page 20-18.

© 2022 Frontier Communications Parent, Inc. All rights reserved.

ACCESS SERVICE

20. **Ethernet Private Line** (Cont'd)

(L) Rates and Charges (Cont'd)

(51) Transport - Banded Optical# – OC12 (Jointly Provided)

	One Year Monthly Rate	Three Year Monthly Rate
1 - 10 miles	$2,650.00	$ 2,500.00
11 - 20 miles	8,000.00	7,500.00
21 + miles	13,000.00	12,500.00

	Five Year Monthly Rate	Seven Year Monthly Rate
1 - 10 miles	$ 2,450.00	$ 2,400.00
11 - 20 miles	7,350.00	7,200.00
21 + miles	12,250.00	12,200.00

Service availability limited. Refer to # footnote on Page 20-18.

© 2022 Frontier Communications Parent, Inc. All rights reserved.

ACCESS SERVICE

20. **Ethernet Private Line** (Cont'd)

(L) Rates and Charges (Cont'd)

(52) Transport - Banded Optical# – OC48 (Jointly Provided)

	One Year Monthly Rate	Three Year Monthly Rate
1 - 10 miles	$ 3,235.00	$ 3,150.00
11 - 20 miles	9,700.00	9,500.00
21 + miles	16,175.00	15,700.00

	Five Year Monthly Rate	Seven Year Monthly Rate
1 - 10 miles	$ 3,050.00	$ 2,975.00
11 - 20 miles	9,300.00	9,100.00
21 + miles	15,350.00	15,100.00

Service availability limited. Refer to # footnote on Page 20-18.

© 2022 Frontier Communications Parent, Inc. All rights reserved.

ACCESS SERVICE

20. **Ethernet Private Line** (Cont'd)

20.1 **Dedicated SONET Optical Transport Service (DSOTS)#**

(A) General

Dedicated SONET Optical Transport Service (DSOTS) provides managed optical transport of multiple protocols which are transmitted over a single fiber optic pair. DSOTS is configured in a diversely routed ring architecture or topology. The ring architecture allows for point-to-point optical services of varying wavelengths to be multiplexed on or off of the ring.

DSOTS allows for the native transmission of multiple high-speed protocols of various wavelengths over a single customized network. The wavelengths are arranged in a channelized format such that the protocol transmitted over each channel is independent of every other channel on the DSOTS ring. The customer must specify, by channel, the interface that defines the transmission speed and protocol being transmitted over the associated wavelength.

(B) Terms and Conditions

An DSOTS ring provides connectivity to multiple customer designated locations (nodes). The minimum node requirement for an DSOTS ring is as follows:

(1) For DSOTS rings that are provided wholly by the Telephone Company, the ring must be configured in one of the following configurations:

(a) a minimum of three nodes provided by the Telephone Company at different locations. At least one of these nodes must be located in a Telephone Company central office (CO) and one must be located at a customer's designated location; or

(b) a minimum of two nodes provided by the Telephone Company at different locations and one or more network optimization mid-span amplifier(s). At least one of these devices (node or amplifier) must be located in a Company CO and at least one of the nodes must be located at a customer's designated location.

Effective February 15, 2007, orders for new DSOTS rings (including both partial and full rings) are no longer permitted. The Telephone Company will continue to provide DSOTS pursuant to this Section 6.8.25(C)(6) on any existing DSOTS that is in-service as of February 15, 2007, or any order for DSOTS that is placed with the Telephone Company prior to February 14, 2007 (collectively, Existing DSOTS), subject to the following conditions:

a. For any Existing DSOTS that is currently subscribed to a term plan (i.e., commitment periods of 3-, 5-, and 7-years), the Telephone Company will continue to provide the Existing DSOTS for an additional six (6) months beyond the expiration date of the customer's current commitment period, or until the customer discontinues service, whichever comes first. Subject to availability of facilities and equipment, certain moves, additions, and/or changes to the Existing DSOTS are permitted provided that such moves, additions, and/or changes do not require a new commitment period or an extension to an existing commitment period.

b. For any Existing DSOTS whose term plan expired prior to February 15, 2007, but the Existing DSOTS continued on a month-to-month basis at prevailing rates, the Telephone Company will continue to provide the Existing DSOTS until August 16, 2007, or until customer discontinues service, whichever comes first. Moves, additions, and/or changes are not permitted.

© 2022 Frontier Communications Parent, Inc. All rights reserved.

ACCESS SERVICE

20. **Ethernet Private Line** (Cont'd)

20.1 **Dedicated SONET Optical Transport Service (DSOTS)#**

(B) Terms and Conditions (Cont'd)

(2) For DSOTS rings that are jointly provided by the Telephone Company and one or more other exchange telephone companies in a multiple company billing arrangement as set forth in Section 2.4.7, the DSOTS ring must be configured with a minimum of three nodes or two nodes and one network optimization mid-span amplifier. A minimum of one device (node or mid-span amplifier) must be provided by the Telephone Company with that device being located in a Telephone Company CO and the remaining devices may be provided by one or more of the other exchange telephone companies jointly providing the service. If more than one device is provided by the Telephone Company, the additional devices may be located at either a customer designated location or in a Telephone Company CO. Jointly provided DSOTS rings must meet all of the same requirements that are set forth in this Guide for wholly provided DSOTS rings. The customer or third party is responsible for engineering its portion of the jointly provided ring.

When two nodes are located in the same building, there will be no diversity between the two nodes.

The DSOTS ring is comprised of nodes, ring mileage, network optimization (amplification) and optical transport channels. These elements are described in (C) following and are provided at the rates set forth in Sections 20.1(K) following.

Service availability limited. Refer to # footnote on Page 20-80.

© 2022 Frontier Communications Parent, Inc. All rights reserved.

ACCESS SERVICE

20. **Ethernet Private Line** (Cont'd)

20.1 **Dedicated SONET Optical Transport Service (DSOTS)# (Cont'd)**

(B) Terms and Conditions (Cont'd)

The customer will be billed additional charges for any charges levied the Telephone Company for space and power required to place nodes on the Company's side of the network interface.

Connection of SONET Connects to an DSOTS ring is provided over an equal speed optical transport channel (e.g. a 155.52 Mbps DSOTS channel would connect to an OC3 SONET Service found in Section 20). All other applicable SONET regulations as set forth in 20(G) preceding apply to the SONET Service.

Custom Connect and DSR are the only Ethernet Private Line SONET services that may be provided over an DSOTS backbone.

Connection of an Ethernet Private Line OC3c or OC12c Ethernet-to-SONET mapped service is provided over an equal speed SONET OC3c or OC12c protected optical transport channel as described in (C)(4) following.

Connection of an Ethernet Private Line 1 Gbps Ethernet Full Rate service is provided over a Gigabit Ethernet optical transport channel.

Connection of an Ethernet Private Line Gigabit Fibre Channel and/or Gigabit FICON service is provided over a Gigabit Fibre channel and/or Gigabit FICON optical transport channel.

An DSOTS ring may also be connected to a Telephone Company provided dedicated SONET ring, Telephone Company provided point-to-point SONET service, or Telephone Company Ethernet private line service provided that such connections are technically and operationally feasible, as determined by the Telephone Company.

The use of a multi-port interface card requires that all channels on a single card be interrupted during periods when the Telephone Company is performing maintenance on that card. No credit for such periods of interruption will apply.

Service availability limited. Refer to # footnote on Page 20-80.

© 2022 Frontier Communications Parent, Inc. All rights reserved.

ACCESS SERVICE

20. **Ethernet Private Line** (Cont'd)

20.1 **Dedicated SONET Optical Transport Service (DSOTS)#** (Cont'd)

(B) Terms and Conditions (Cont'd)

The customer is responsible to ensure that its facilities and equipment meets any applicable technical requirements or limitations for the protocol being transmitted over the optical transport channels.

For DSOTS rings that are provided wholly by the Telephone company, the Telephone Company is responsible for the overall design and configuration of the DSOTS ring. Construction of the ring will not begin until such design and configuration are mutually agreeable to both the customer and the Telephone Company.

In the case of an DSOTS ring that is jointly provided by the Telephone Company and one or more other exchange telephone companies in a multiple billing arrangement as set forth in Section 2.4.7 preceding, the overall design and configuration of the DSOTS ring must be mutually agreeable to the Telephone Company, any other exchange telephone company(s) involved and to the customer. When the Telephone Company is an intermediate provider of transport as described in Section 2.4.7(B) preceding, at least one node of the DSOTS ring must be located in a Telephone Company CO.

Credit for service interruption of DSOTS is set forth in Section 2.7.1.1 preceding.

The technical specifications for DSOTS are delineated in Technical References GR-2918-CORE, Issue 6; GR-2979-CORE, Issue 5; GR-1312-CORE, Issue 3; ITU-T G.959.1; and ITU-T G.692. Technical specifications for the underlying protocols transmitted over the DSOTS ring are specified in (C)(4) following.

(C) Service Components

(1) Nodes are dense wave division multiplexing (DWDM) devices located at customer designated premises or Telephone Company wire centers from which optical transport channels are multiplexed on or off of the DSOTS ring. The type of node that is deployed at each location is determined by the number of optical transport channels that will be multiplexed on or off of the DSOTS ring at that location.

4 Channel Node
Placement of a 4 channel node at a location enables up to 4 protected optical transport channels to be deployed. Each protected optical channel may be replaced by two unprotected optical channels up to a maximum of 8 possible channels on the node. A 4 channel node may be utilized as the primary node at a location or as an expansion node to expand the capacity of a 16 channel primary node. 4 channel nodes are subject to the availability of suitable facilities and equipment to provide such device. No more than one 4 channel node will be provided at a location.

Service availability limited. Refer to # footnote on Page 20-80.

© 2022 Frontier Communications Parent, Inc. All rights reserved.

ACCESS SERVICE

20. **Ethernet Private Line** (Cont'd)

20.1 **Dedicated SONET Optical Transport Service (DSOTS)#** (Cont'd)

(C) Service Components (Cont'd)

16 Channel Node
Placement of a 16 channel primary node at a location enables up to 16 protected optical transport channels to be deployed. Each protected optical channel may be replaced by two unprotected optical channels up to a maximum of 32 possible channels on the primary node.

The capacity of a 16 channel primary node may be increased through the addition of an expansion node at the same location. A 4 channel expansion node enables up to 20 protected optical transport channels (i.e., 16 on the primary node and 4 on the expansion node) to be deployed at a single location. Each protected optical channel may be replaced by two unprotected optical channels up to a maximum of 40 possible channels at that location. A 16-channel expansion node enables up to 32 protected optical transport channels (i.e., 16 on the primary node and 16 on the expansion node) to be deployed at a single location. Each protected optical channel may be replaced by two unprotected optical channels up to a maximum of 64 possible channels at that location.

The maximum number of optical transport channels that can be deployed at a single location is dependent upon the specific configuration of the DSOTS ring and the type of optical transport channels being deployed from that location.

(2) Except as set forth in 2.4.7(B)(8) preceding, DSOTS Ring Mileage for a full ring service configuration is the total of airline distances between devices (nodes and amplifiers) rounded up to the nearest mile. The mileage rate is based on total ring capacity and not on individual services between devices. For example, the mileage charge for a five device ring with two mid-span amplifiers and a distance of 4.3 miles between each device (21.5 total miles) would be calculated by multiplying the mileage rate in Section 20.1(K) following by 22 miles. The mileage between devices (e.g., a primary node and an expansion node or an At-Node amplifier, as applicable) located at the same customer designated premises or Telephone Company wire center is zero. This mileage calculation applies regardless of the number of services on the ring.

(3) Network Optimization provides for amplification of the signal to ensure acceptable optical levels. When required, amplification is performed at the node (primary node or expansion node) or in a Telephone Company wire center when mid-span amplification of the signal is required between nodes. Node amplification occurs in one or two directions (East to West and/or West to East). Amplification in two directions requires the use of two at-node amplifiers. Mid-span amplification occurs simultaneously in both directions (East to West and West to East). The Telephone Company shall have sole responsibility in determining when amplification is required and the quantity and type of amplification necessary to maintain acceptable optical levels.

Service availability limited. Refer to # footnote on Page 20-80.

© 2022 Frontier Communications Parent, Inc. All rights reserved.

ACCESS SERVICE

20. **Ethernet Private Line** (Cont'd)

20.1 **Dedicated SONET Optical Transport Service (DSOTS)#** (Cont'd)

(C) Service Components (Cont'd)

(4) Optical transport channels allow for optical services to be multiplexed on to or off of the DSOTS ring at locations equipped with an DSOTS node. An optical interface at the node allows for connection of the applicable protocol to the customer's equipment. Optical transport channels are provided on a point-to-point basis and are available on a protected or unprotected basis depending on the protocol being transmitted and the level of redundancy required for the optical channel. These channels may be ordered using a single-port interface (each a single channel per interface card) or using a multi-port interface. A multi-port interface is a facility capable of supporting up to 4 multi-port channels of ESCON, Fiber Channel, FDDI, Fast Ethernet, D1 Video, or any combination of these multi-port channels. A multi-port optical transport channel provides a two-point facility over the DSOTS ring for the purpose of aggregating multiple optical channels over a single wavelength.

Some protocols have facility distance limitations and may affect the design or availability of the DSOTS ring or its optical transport channels. The multi-port interface is provided with a short reach, 2-fiber interface with a 1310nm signal.

A protected optical channel allows for a single signal from the customer to be duplicated and sent over separate diverse routes (working and protected) within the DSOTS network.

An unprotected optical channel provides minimum protection of the signal from the customer as the signal is routed over a single path.

Optical transport channels are delivered over a single-port interface or multi-port interface unless otherwise specified. The use of a multi-port interface and the type of optical transport channels that can be provided over a single-port or multi-port interface are subject to the availability of suitable equipment to provide the requested service.

All signals generated by Customer provided equipment and delivered to the Telephone Company for multiplexing on to DSOTS must meet industry standards and specifications for the underlying protocol. The customer is responsible to perform any error detection and error correction of the data generated by its equipment. The Telephone Company assumes no responsibility for the quality of the signal generated by the customer or any customer provided equipment and will deliver the signal to the receiving location in the same format and condition as generated by the customer.

Optical transport channels used in the provision of Switched Access Services are limited to SONET OC3, OC12, OC48 and OC192 protected or unprotected optical transport channels.

Service availability limited. Refer to # footnote on Page 20-80.

© 2022 Frontier Communications Parent, Inc. All rights reserved.

ACCESS SERVICE

20. **Ethernet Private Line** (Cont'd)

20.1 **Dedicated SONET Optical Transport Service (DSOTS)#** (Cont'd)

(C) Service Components (Cont'd)

(4) (Cont'd)

SONET OC3 – for transmission of 155.52 Mbps synchronous optical data transmission capability. SONET OC3 is delivered over a single-port interface only.

SONET OC3c – for transmission of concatenated 155.52 Mbps synchronous optical data transmission capability. SONET OC3c is delivered over a single-port interface only.

SONET OC12 – for transmission of 622.08 Mbps synchronous optical data transmission capability. SONET OC12 is delivered over a single-port interface only.

SONET OC12c – for transmission of concatenated 622.08 Mbps synchronous optical data transmission capability. SONET OC12c is delivered over a single-port interface only.

SONET OC48 – for transmission of 2.488 Gbps synchronous optical data transmission capability. SONET OC48 is delivered over a single-port interface only.

SONET OC48c – for transmission of concatenated 2.488 Gbps synchronous optical data transmission capability. SONET OC48c is delivered over a single-port interface only.

SONET OC192 – for transmission of 9.953 Gbps synchronous optical data transmission capability. SONET OC192 is delivered over a single-port interface only.

SONET OC192c – for transmission of concatenated 9.953 Gbps synchronous optical data transmission capability. SONET OC192c is delivered over a single-port interface only.

ESCON* – for transmission of one 200 Mbps Enterprise Service Connection channel between the same two DSOTS nodes used for computer-to-computer data exchange. An ESCON signal is limited to a maximum distance of 43km (physical route kilometers) between the locations involved. ESCON is delivered over a multi-port interface only.

FICON* – for transmission of 1 Gbps and 2 Gbps Fiber Connection among mainframes, storage devices and peripherals on a single channel. A FICON signal is limited to a maximum distance of 100km (physical route kilometers) between the locations involved. FICON is delivered over a single-port interface only.

Service availability limited. Refer to # footnote on Page 20-80.

© 2022 Frontier Communications Parent, Inc. All rights reserved.

ACCESS SERVICE

20. **Ethernet Private Line** (Cont'd)

20.1 **Dedicated SONET Optical Transport Service (DSOTS)#** (Cont'd)

(C) Service Components (Cont'd)

(4) (Cont'd)

The Telephone Company will transmit the following protocols over DSOTS optical transport channels (Cont'd):

Fiber Channel* – for transmission of 2.125 Gbps, 1.0625 Gbps, 531 Mbps, 266 Mbps and 133 Mbps signals in a serial link between supercomputers, mainframes, workstations, desktop computers, storage devices, displays and other peripherals. A Fiber Channel signal is limited to a maximum distance of 100km (physical route kilometers) between the locations involved. Fiber Channel signals at transmission speeds of 2.125 Gbps, 1.0625 Gbps, 531 Mbps, 266 Mbps, and 133 Mbps are delivered over a single-port interface. Fiber Channel signals at transmission speeds of 266 Mbps and 133 Mbps may also be delivered over a multi-port interface.

ETR/CLO* – a channel for transmission of an 8 Mbps External Timing Reference/Control Link Oscillator signal for distributing time-of-day information to all central processing units in the Sysplex and to keep the Sysplex timer units synchronized with each other. An ETR/CLO signal is limited to a maximum distance of 40km (physical route kilometers) between the locations involved. ETR/CLO is delivered over a single-port interface only.

FDDI* – for transmission of 100 Mbps Fiber Distributed Data Interface channels for general purpose interconnection between computers and peripheral equipment, including interconnection of Local Area Networks and other networks. FDDI is delivered over a single-port or multi-port interface.

ISC* – for transmission of 1.06 Gbps InterSystem Channel for data caching, locking and queuing services between coupling facility and a central processing unit. An ISC signal is limited to a maximum distance of 40km (physical route kilometers) between the locations involved. ISC is delivered over a single-port interface only.

ISC3* – for transmission of 2.125Gbps InterSystem Channel for data caching, locking and queuing services between coupling facility and a central processing unit. An ISC3 signal is limited to a maximum distance of 40km (physical route kilometers) between the locations involved. ISC3 is delivered over a single-port interface only.

Fast Ethernet* – for 100 Mbps transmission of Ethernet. Fast Ethernet is delivered over a single-port or multi-port interface.

Gigabit Ethernet* – for 1.0 Gbps transmission of Ethernet. Gigabit Ethernet is delivered over a single-port interface only.

10 Gigabit Ethernet LAN-PHY – 10GBASE-R (LAN PHY) interfaces offer an effective line rate of 10.3125 Gbps (10 Gbps of data traffic encoded in a 64B/66B protocol compared to the traditional 8B/10B protocol of Gigabit Ethernet). 10 Gigabit Ethernet LAN-PHY is delivered over a single-port interface only.

10 Gigabit Ethernet WAN-PHY – 10GigE data rate and format compatible with the SONET OC192c transmission format defined by ANSI. 10 Gigabit Ethernet WAN-PHY is delivered over a single-port interface only.

D1 Video* – for uncompressed digital transmission of video signals operating at 270 Mbps. D1 Video is delivered over a single-port or multi-port interface.

* Denotes a data optical transport channel.
# Service availability limited. Refer to # footnote on Page 20-80.

© 2022 Frontier Communications Parent, Inc. All rights reserved.

ACCESS SERVICE

20. **Ethernet Private Line** (Cont'd)

20.1 **Dedicated SONET Optical Transport Service (DSOTS)**#(Cont'd)

(C) Service Components (Cont'd)

(4) (Cont'd)

The technical specifications for the protocols transmitted over DSOTS optical transport channels are delineated in the following Technical References:

Protocol Transmitted	Technical Reference
SONET OC3, OC12, OC48	GR-253-CORE, Issue 4
SONET OC3c, OC12c, OC48c	GR-253-CORE, Issue 4
SONET OC192, OC192c	GR-253-CORE, Issue 4
ESCON, FICON	SA23-0394-06
	GA23-0367-12
	ANSI INCITS 296-1997 (R2007)
ISC	SG24-5638-00
ISC3	SA23-0395-05
ETR/CLO	SG24-2070-00
Fiber Channel	ANSI INCITS 303-1998 (R2003)
FDDI	IEEE 802.3u-1995
	ANSI INCITS 166-1989 (R2005)
	ANSI INCITS 148-1988 (R2004)
Fast Ethernet	IEEE 802.3-2005/Cor2/D2.0-2007
	IEEE 802.3z-1998
Gigabit Ethernet	IEEE 802.3-2005/Cor2-2007
	IEEE 802.3z-1998
10 Gigabit Ethernet WAN-PHY	IEEE 802.3ae-2002 with WAN Interface Sublayer
10 Gigabit Ethernet LAN-PHY	IEEE 802.3ae-2002 with LAN Interface Sublayer
D1 Video	SMPTE 0259M-2008

Service availability limited. Refer to # footnote on Page 20-80.

(

© 2022 Frontier Communications Parent, Inc. All rights reserved.

ACCESS SERVICE

20. **Ethernet Private Line** (Cont'd)

20.1 **Dedicated SONET Optical Transport Service (DSOTS)#** (Cont'd)

(C) Service Components (Cont'd)

(5) An example of an Dedicated SONET Optical Transport Service Ring is diagrammed below:

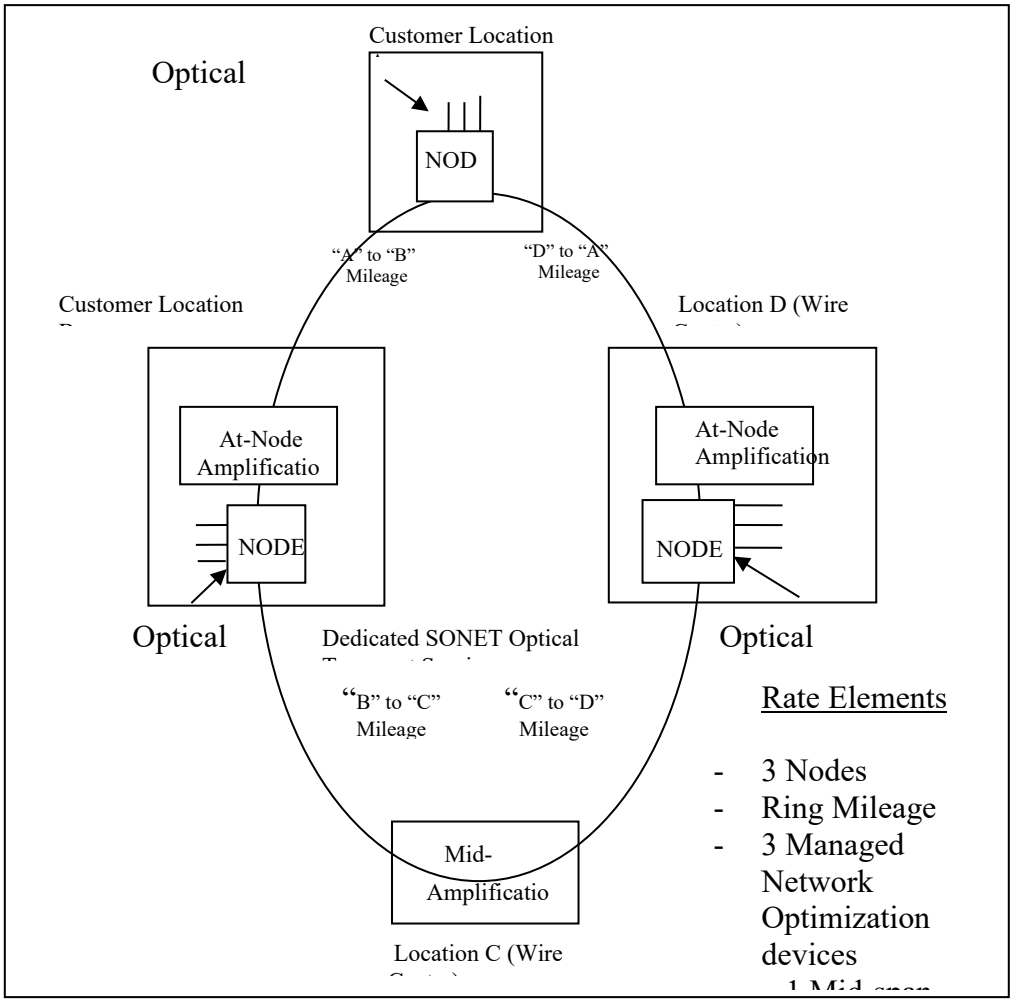

Service availability limited. Refer to # footnote on Page 20-80.

© 2022 Frontier Communications Parent, Inc. All rights reserved.

ACCESS SERVICE

20. **Ethernet Private Line** (Cont'd)

20.1 **Dedicated SONET Optical Transport Service (DSOTS)#** (Cont'd)

(D) Application of Rates and Charges

(1) DSOTS is available for 3, 5 and 7 year commitment periods for the nodes, ring mileage, network optimization at-node amplification (subject to (D)(10) following), network optimization mid-span amplification and optical transport channels.

(2) Nodes, network optimization mid-span amplification and SONET optical transport channels added subsequent to the initial installation may be coterminous to the expiration date of the DSOTS at the rates and charges specified for the term plan on the existing DSOTS or may require an extension to the existing plan as follows. If the addition is prior to the 21st month for an existing 3-year plan, prior to the 36th month for an existing 5-year plan, or prior to the 50th month for an existing 7-year plan, the addition will be coterminous to the expiration date of the DSOTS. If the addition is after the aforementioned periods, the customer must extend the commitment period of its existing plan for an additional one-year for a 3-year plan, an additional 2 years for a 5-year plan, or an additional 3 years for a 7-year plan. SONET services associated with DSOTS are subject to the termination liability set forth in Section 20(G) preceding.

(3) Effective August 16, 2005, separate rates and charges for network optimization at-node amplification apply subject to (D)(10) following.

(4) Data optical transport channels added subsequent to the initial installation will be coterminous to the expiration date of the DSOTS at the rates and charges specified for the term plan on the existing DSOTS. These channels are subject to a minimum service period of three months.

(5) The addition of SONET and/or Data optical transport channels subsequent to the initial installation of service may also require the addition of an expansion node(s) and/or network optimization device(s) to accommodate the increase in channels. The addition of an expansion node or network optimization is subject to the conditions set forth above.

(6) Monthly recurring charges apply for the nodes, ring mileage, network optimization and optical transport channels. The monthly rate for an optical transport channel applies for the entire point-to-point connection. Once a term period expires, the prevailing rates of the current plan will continue until the customer cancels service or requests a new term plan.

(7) When the optical transport channel is provided with a multi-port interface, rates and charges apply for the multi-port facility and for each multi-port channel riding the multi-port facility. When an optical transport channel is delivered over a multi-port interface, the multi-port facility and each multi-port channel riding the multi-port facility must be billed to the same customer who subscribes to the DSOTS ring.

Service availability limited. Refer to # footnote on Page 20-80.

© 2022 Frontier Communications Parent, Inc. All rights reserved.

ACCESS SERVICE

20. **Ethernet Private Line** (Cont'd)

20.1 **Dedicated SONET Optical Transport Service (DSOTS)#** (Cont'd)

(D) Application of Rates and Charges (Cont'd)

(8) The rate and charges for optical transport channels delivered over a single-port or multi-port interface are set forth in Section 20.1(K)(4) or 20.1(K)(5), respectively, following.

(9) Nonrecurring charges for DSOTS apply for the initial installation of service and for any subsequent network optimization mid-span amplification or optical transport channel that is added at any time after the initial installation of service. A nonrecurring charge also applies to upgrade a 4 channel primary node to a 16 channel primary node or a 4 channel expansion node to a 16 channel expansion node.

(10) Rates and charges for DSOTS nodes, ring mileage, network optimization at-node amplification, network optimization mid-span amplification and optical transport channels which are in-service as of, or ordered prior to August 16, 2005 are subject to Category I rates, unless the customer has converted to Category II rates under (D)(10)(c) following.

Rates and charges for DSOTS nodes, ring mileage, network optimization mid-span amplification and optical transport channels which are installed on or after August 16, 2005 are subject to Category II rates. Category II rates also apply to DSOTS which are converted from Category I under (D)(10)(c) following.

(a) Category I rates are grandfathered as of August 16, 2005 and apply to DSOTS that is in-service as of, or ordered prior to, August 16, 2005 under this Section 20, unless the customer elects to convert DSOTS billing to Category II rates in accordance with (D)(10)(c) following. Category I rates are subject to separate rates and charges for network optimization at-node amplification.

(b) Category II rates apply to each DSOTS which is ordered on or after August 16, 2005 under this Section 20.1. Category II rates also apply to nodes, network optimization, mileage, and optical transport channels which are ordered on or after August 16, 2005 as an addition to an existing DSOTS, regardless of whether or not such existing DSOTS is subject to Category I or Category II rates. When the Telephone Company's network design for such addition to an existing DSOTS requires that a network optimization at-node amplifier be added to an existing node that is billed at Category I rates, the billing for such node will be converted to the Category II node rate element, which node rate element includes amplification at the node.

Category II rates also apply to DSOTS that are converted from Category I rates to Category II rates in accordance with (D)(10)(c) following. Category II rates do not include separate rates and charges for network optimization at-node amplification which is provided as part of the node rate element on or after August 16, 2005.

Service availability limited. Refer to # footnote on Page 20-80.

© 2022 Frontier Communications Parent, Inc. All rights reserved.

ACCESS SERVICE

20. **Ethernet Private Line** (Cont'd)

20.1 **Dedicated SONET Optical Transport Service (DSOTS)#** (Cont'd)

(D) Application of Rates and Charges (Cont'd)

(10) (Cont'd)

(c) A customer subject to Category I rates under (a) preceding may convert to Category II rates subject to the following:

(1) The customer must submit an access order for the conversion to Category II rates.

(2) Separate rates and charges applicable to network optimization at-node amplification under Category I rates shall cease coincident with the date that billing at Category II rates commences.

(3) A new commitment period commences with the conversion from Category I rates to Category II rates. The customer must select a new commitment period from those offered under (D)(1) preceding. The new commitment period must be equal to, or longer than, the commitment period for the DSOTS that was subject to the Category I rates. For example, an DSOTS under a 5-year commitment period at Category I rates may only convert to a new 5-year commitment period or a new 7-year commitment period upon conversion to Category II rates.

(4) There can be no physical work activity (e.g., moves, additions, changes) associated with the orders for conversion to Category II rates. Upon conversion, all terms and conditions of this Guide shall apply to the converted DSOTS service, including any applicable termination liability and minimum period obligations.

(5) When the conversion is ordered between the period beginning August 16, 2005 and ending November 16, 2005, the conversion will not be subject to minimum period and/or termination liability as they may otherwise apply for early termination of the Category I term plan, provided that the conditions set forth in (1) through (4) preceding are met.

Conversion from Category I rates to Category II rates that is ordered after November 16, 2005 is subject to all minimum period and/or termination liability as they apply for early termination of the Category I term plan. Additionally, conversion to Category II rates ordered after November 16, 2005 is subject to the requirements set forth in (1) through (4) preceding.

Service availability limited. Refer to # footnote on Page 20-80.

© 2022 Frontier Communications Parent, Inc. All rights reserved.

ACCESS SERVICE

20. **Ethernet Private Line** (Cont'd)

20.1 **Dedicated SONET Optical Transport Service (DSOTS)#** (Cont'd)

(D) Application of Rates and Charges (Cont'd)

(11) A change in the type (e.g., Fiber Channel to FICON) or optical carrier rate (e.g., OC3 to OC12) of optical transport channel is treated as a discontinuance of the existing channel and an installation of a new optical transport channel.

(12) When an optical transport channel is ordered to connect with SONET Services, the optical transport channel will be billed to the SONET customer. Optical transport channels ordered on or after August 16, 2005 are provided at Category II rates.

(13) When an optical transport channel is ordered to connect to a Telephone Company provided dedicated SONET ring, Telephone Company provided point-to-point SONET service, or Telephone Company Ethernet private line service, the optical channel will be billed to the dedicated SONET ring, point-to-point SONET service, or Ethernet private line service customer.

Termination Liability

(E)

(1) Termination liability applies to DSOTS and is charged per monthly rate element on all nodes, network optimization, SONET optical transport channels and Network Management Methods. SONET services associated with DSOTS are subject to the termination liability in Section 20(G)(5). Data optical transport channels as set forth in (C) preceding are not subject to termination liability; however, such channels are subject to a minimum service period of three-months.

(2) A separate termination liability charge is assessed for each rate element associated with the disconnected DSOTS or a Network Management Method. For example, assume that the customer subscribes to an DSOTS ring that is arranged with the Direct TL1 Monitoring Optional Feature, as set forth in (L)(2) following. Further, assume that the customer disconnects the DSOTS ring along with the Direct TL1 Monitoring Optional Feature prior to the end of the commitment period. Then, the customer shall pay termination liability on the nodes, network optimization, partial ring high-speed interfaces, optical transport channels and the Direct TL1 Monitoring Optional Feature monthly recurring rate elements as set forth in this section.

Reserved for Future Use (C).

(3) Termination liability will not apply on any DSOTS service or Network Management Method if (1) a customer changes its term plan to a longer commitment period; or (2) a 4 channel primary node is upgraded to a 16 channel primary node; (3) a 4 channel expansion node is upgraded to a 16 channel expansion node; or (4) a term plan subject to Category I rates is converted to a new term plan subject to Category II rates, when such conversion satisfies the conditions in (D)(10)(c) preceding and is ordered on or before November 16, 2005.

(4) Termination liability will apply when the conditions above are not met and the customer cancels service prior to expiration of the plan period. If the cancellation occurs within the first two years of a term plan, termination liability is equal to 100 percent of the monthly charges for the unexpired portion of the first two years, and 25 percent of the monthly charges for the remainder of the plan. If the customer cancels after the first two years of service, then termination liability is equal to 25 percent of the monthly charges for the remaining life of the term.

Service availability limited. Refer to # footnote on Page 20-80.

(5)

© 2024 Frontier Communications Parent, Inc. All rights reserved.

ACCESS SERVICE

20. **Ethernet Private Line** (Cont'd)

20.1 **Dedicated SONET Optical Transport Service (DSOTS)#** Cont'd)

(E) Termination Liability (Cont'd)

(6) For DSOTS with a commitment period which was extended under (I) following, termination liability is calculated as the difference between (1) the monthly rates for the highest Term Pricing Plan commitment period that could have been satisfied prior to disconnection of the service or cancellation of the plan and (2) the monthly rates already paid during both the initial commitment period and the extended commitment period for the period of time the service was in effect.

(F) Conversions

(1) Customers who wish to move or convert existing SONET, High Capacity Switched Access Entrance Facilities or High Capacity Special Access Services to DSOTS may do so without conversion charges (termination liability and installation charges) as long as the total capacity of the SONET, Switched Access Entrance Facility or Special Access Service purchased by the customer does not decrease.

(2) Customers who wish to convert existing DSOTS under a term plan with Category I rates to a new term plan with Category II rates may do so without conversion charges (minimum period obligations, termination liability, and installation charges) as long as the requirements set forth in (D)(10)(c) are met and is ordered on or before November 16, 2005.

(G) Deployment and Availability

Since DSOTS is a dedicated high capacity customized network, it is deployed upon customer request. Where suitable facilities are not generally available, rates and charges as set forth in the Telephone Company's TARIFF F.C.C. NO. 7, Special Construction, may apply.

DSOTS is available based on negotiated intervals as described in 3.2.1 preceding.

(H) Shared Use

The general regulations applicable to the shared use of Ethernet Private Line are set forth in Section 20(I) preceding. In the case of DSOTS, the monthly rate for the Switched Access DSOTS Service ring mileage, node and network optimization rates will be reduced accordingly based upon the total channel capacity of the DSOTS ring and the monthly rate for the equivalent Special Access ring mileage, node and network optimization rate elements will apply. The total channel capacity for an DSOTS ring is measured in terms of the total number of optical transport channels that can be transported over the ring.

Service availability limited. Refer to # footnote on Page 20-80.

© 2022 Frontier Communications Parent, Inc. All rights reserved.

ACCESS SERVICE

20. **Ethernet Private Line** (Cont'd)

20.1 **Dedicated SONET Optical Transport Service (DSOTS)#**(Cont'd)

(I) Extension of a Commitment Period

(1) The customer has the option, at any time prior to the expiration date for its commitment period, to extend its Term Pricing Plan to a plan with a longer commitment period, for which time-in-service credit will be allowed for the plan being extended. The commitment period selected for the extended plan must be longer than the commitment period of the plan being extended.

- A 3-Year Term may be extended to either a 5-Year or 7-Year Term Plan.
- A 5-Year Term may be extended to a 7-Year Term Plan.

(2) Time-in-service credit on the plan being extended will be granted and applied towards the new extended plan. For example, an DSOTS with a 3-Year term plan that has been in-service for 18 months will allow for 18 months of time-in-service credit towards the extended plan.

(3) A Category I term plan that is converted under (D)(10)(c) preceding to a Category II term plan is not eligible for time-in-service credit on the Category II term plan.

(4) The rate for the longer commitment period will apply effective with the first bill day following the order to extend the plan and continue through the remainder of the commitment period associated with the extended plan. No adjustment for the increased discount associated with the extended plan will be made to the monthly rates already billed on the plan being extended.

(5) The customer may also extend the commitment period in order to install additional nodes, network optimization devices or SONET optical channels as described in (D) preceding.

(6) Extension of a term pricing plan subject to Category I rates will be extended at Category I rates. However, nodes, network optimization, ring mileage and optical transport channels added during the period of extension are subject to Category II rates unless otherwise specified.

(7) Extension of a term pricing plan under Category II rates will be extended at Category II rates.

Service availability limited. Refer to # footnote on Page 20-80.

© 2022 Frontier Communications Parent, Inc. All rights reserved.

ACCESS SERVICE

20. **Ethernet Private Line** (Cont'd)

20.1 **Dedicated SONET Optical Transport Service (DSOTS)#**(Cont'd)

(J) Channel Interface Codes

The following channel interface codes is used for the DSOTS ring:

NCI
02FMF.4 for 4 Channel Node (Primary or Expansion)
02FMF.16 for 16 Channel Node (Primary or Expansion)

The following channel interface codes are used for channels using wavelengths on the DSOTS ring:

02FCF.10C (FDDI SM 125 Mbps)
02FCF.10D (FDDI MM 125 Mbps)
02FCF.15 (SONET OC3/OC3c)
02FCF.62 (SONET OC12/OC12c)
02FCF.25 (SONET OC48/OC48c)
02SOF.B,D,F,X (SONET OC192/192c)
02FCF.CCS (ESCON)
02FCF.CTS (ETR/CLO)
02FCF.FC (1.0625 Gbps Fiber Channel)
02FCF.FC1 (133 Mbps Fiber Channel)
02FCF.FC2 (266 Mbps Fiber Channel)
02FCF.FC5 (531 Mbps Fiber Channel)
02OPF.A02, A04, A07 (2.125 Gbps Fibre Channel)
02FCF.GFM (1Gbps FICON)
02OPF.A02, A04, A07 (2.125 Gbps FICON)
02FCF.GIS (ISC)
02OPF.A02, A04, A07 (ISC3 at 2.125Gbps)
02FMF.S (DWDM 4-Port 1.25 Gbps)
02LNF.100 (Fast Ethernet)
02LNF.1GE (Gigabit Ethernet)
02LNF.A02 (10 Gigabit Ethernet WAN-PHY)
02LNF.A02 (10 Gigabit Ethernet LAN-PHY)
02TD6.E (D1 Video)

Service availability limited. Refer to # footnote on Page 20-80.

© 2022 Frontier Communications Parent, Inc. All rights reserved.

ACCESS SERVICE

20. **Ethernet Private Line** (Cont'd)

20.1 **Dedicated SONET Optical Transport Service (DSOTS)#** (Cont'd)

(K) Rates and Charges

(1) Nodes, per node
(Jurisdiction: Illinois)

	Monthly	Category I Nonrecurring Rate	Category I Initial Charge
3-Year Term/4 Channel Nodes			
Primary or Expansion Customer Premises Node		$ 7,500.00	$1.00
Primary or Expansion Central Office Node		7,500.00	1.00
3-Year Term/16 Channel Nodes			
Primary Customer Premises Node		12,500.00	1.00
Primary Central Office Node		12,500.00	1.00
Expansion Customer Premises Node		12,500.00	1.00
Expansion Central Office Node		12,500.00	1.00
5-Year Term/4 Channel Nodes			
Primary or Expansion Customer Premises Node		3,900.00	1.00
Primary or Expansion Central Office Node		3,900.00	1.00
5-Year Term/16 Channel Nodes			
Primary Customer Premises Node		6,500.00	1.00
Primary Central Office Node		6,500.00	1.00
Expansion Customer Premises Node		6,500.00	1.00
Expansion Central Office Node		6,500.00	1.00
7-Year Term/4 Channel Nodes			
Primary or Expansion Customer Premises Node		3,480.00	1.00
Primary or Expansion Central Office Node		3,480.00	1.00
7-Year Term/16 Channel Nodes			
Primary Customer Premises Node		5,800.00	1.00
Primary Central Office Node		5,800.00	1.00
Expansion Customer Premises Node		5,800.00	1.00
Expansion Central Office Node		5,800.00	1.00

Service availability limited. Refer to # footnote on Page 20-80.

© 2022 Frontier Communications Parent, Inc. All rights reserved.

ACCESS SERVICE

20. **Ethernet Private Line** (Cont'd)

20.1 **Dedicated SONET Optical Transport Service (DSOTS)#** (Cont'd)

(K) Rates and Charges (Cont'd)

(1) Nodes, per node (Cont'd)
(Jurisdiction: Illinois)

	Monthly	Category II Nonrecurring Rate	Category II Initial Charge
3-Year Term/4 Channel Nodes			
Primary or Expansion Customer Premises Node		$ 8,000.00	$1.00
Primary or Expansion Central Office Node		8,000.00	1.00
3-Year Term/16 Channel Nodes			
Primary Customer Premises Node		11,130.00	1.00
Primary Central Office Node		11,130.00	1.00
Expansion Customer Premises Node		11,130.00	1.00
Expansion Central Office Node		11,130.00	1.00
5-Year Term/4 Channel Nodes			
Primary or Expansion Customer Premises Node		6,000.00	1.00
Primary or Expansion Central Office Node		6,000.00	1.00
5-Year Term/16 Channel Nodes			
Primary Customer Premises Node		8,350.00	1.00
Primary Central Office Node		8,350.00	1.00
Expansion Customer Premises Node		8,350.00	1.00
Expansion Central Office Node		8,350.00	1.00
7-Year Term/4 Channel Nodes			
Primary or Expansion Customer Premises Node		5,500.00	1.00
Primary or Expansion Central Office Node		5,500.00	1.00
7-Year Term/16 Channel Nodes			
Primary Customer Premises Node		8,250.00	1.00
Primary Central Office Node		8,250.00	1.00
Expansion Customer Premises Node		8,250.00	1.00
Expansion Central Office Node		8,250.00	1.00

Service availability limited. Refer to # footnote on Page 20-80.

© 2022 Frontier Communications Parent, Inc. All rights reserved.

ACCESS SERVICE

20. **Ethernet Private Line** (Cont'd)

20.1 **Dedicated SONET Optical Transport Service (DSOTS)#** (Cont'd)

(K) Rates and Charges (Cont'd)

(1 Nodes, per node (Cont'd)
(Jurisdiction: Illinois)

		Category I
Subsequent Installation or Augmentation, per 4 channel or 16 channel Primary or Expansion node		Nonrecurring Charge $ 1,600.00
Upgrade to 16 channel Primary or Expansion Node, Per 4 channel Primary or Expansion Node Upgraded	T	20,000.00

		Category II
Subsequent Installation or Augmentation, per 4 channel or 16 channel Primary or Expansion node	I	Nonrecurring Charge 1,600.00
Upgrade to 16 channel Primary or Expansion Node, Per 4 channel Primary or Expansion Node Upgraded		20,000.00

Service availability limited. Refer to # footnote on Page 20-80.

© 2022 Frontier Communications Parent, Inc. All rights reserved.

ACCESS SERVICE

20. **Ethernet Private Line** (Cont'd)

20.1 **Dedicated SONET Optical Transport Service (DSOTS)#** (Cont'd)

(K) Rates and Charges (Cont'd)

(2) Ring Mileage, per mile

(Jurisdiction: Illinois)

	Category I Monthly Rate
3-Year Term	
Mile 1 – 20	$1,100.00
Mile 21 and Over	520.00
5-Year Term	
Mile 1 – 20	639.00
Mile 21 and Over	300.00
7-Year Term	
Mile 1 – 20	575.00
Mile 21 and Over	270.00

Ring Mileage, per mile

	Category II Monthly Rate
3-Year Term	
Mile 1 – 20	310.00
Mile 21 and Over	310.00
5-Year Term	
Mile 1 – 20	230.00
Mile 21 and Over	230.00
7-Year Term	
Mile 1 – 20	225.00
Mile 21 and Over	225.00

Service availability limited. Refer to # footnote on Page 20-80.

© 2022 Frontier Communications Parent, Inc. All rights reserved.

ACCESS SERVICE

20. **Ethernet Private Line** (Cont'd)

20.1 **Dedicated SONET Optical Transport Service (DSOTS)**#(Cont'd)

(K) Rates and Charges (Cont'd)

(3) Network Optimization,
per amplification device

(Jurisdiction: Illinois)

Category I

	Monthly Rate	Initial Nonrecurring Charge
At Node 3-Year Term	$5,000.00	$1.00
At Node 5-Year Term	2,650.00	1.00
At Node 7-Year Term	2,400.00	1.00
Mid-span 3-Year Term	5,400.00	1.00
Mid-span 5-Year Term	2,800.00	1.00
Mid-span 7-year Term	2,600.00	1.00

Category II

	Monthly Rate	Initial Nonrecurring Charge
Mid-span 3-Year Term	6,200.00	1.00
Mid-span 5-Year Term	4,650.00	1.00
Mid-span 7-year Term	4,600.00	1.00

(4)

Category I

	Nonrecurring Charge
Subsequent installation, per amplification device	$1,600.00

Category II

	Nonrecurring Charge
Subsequent installation, per amplification device	1,600.00

Service availability limited. Refer to # footnote on Page 20-80.

© 2022 Frontier Communications Parent, Inc. All rights reserved.

ACCESS SERVICE

20. **Ethernet Private Line** (Cont'd)

20.1 **Dedicated SONET Optical Transport Service (DSOTS)#** (Cont'd)

(K) Rates and Charges (Cont'd)

(5) Optical Transport Channels
Single/Multi-Port Interface

(a) Monthly Rates
(Jurisdiction: Illinois)

Interface Type		Category I Monthly Rate 3-Year Term
Unprotected SONET OC3/OC3c	*	$ 850.00
Unprotected SONET OC12/OC12c	*	1,400.00
Unprotected SONET OC48/OC48c	*	3,450.00
Unprotected SONET OC192/OC192c	*	5,800.00
Unprotected 1 Gbps FICON		3,450.00
Unprotected 2 Gbps FICON		3,450.00
Unprotected Fiber Channel		3,450.00
Unprotected 2Gbps Fiber Channel		3,450.00
Unprotected ETR/CLO		3,450.00
Unprotected FDDI		3,450.00
Unprotected 1.06 Gbps ISC		3,450.00
Unprotected 2Gbps ISC3		3,450.00
Unprotected Fast Ethernet		3,450.00
Unprotected Gigabit Ethernet		3,450.00
Unprotected 10 Gigabit Ethernet LAN-PHY/WAN-PHY		5,800.00
Unprotected D1 Video		3,450.00
Unprotected Multi-Port Facility		4,700.00
Unprotected Multi-Port Channel		
ESCON		225.00
Fiber Channel		225.00
FDDI		225.00
Fast Ethernet		225.00
D1 Video		225.00

* Concatenation not available on Switched interfaces.

Service availability limited. Refer to # footnote on Page 20-80.

© 2022 Frontier Communications Parent, Inc. All rights reserved.

ACCESS SERVICE

20. **Ethernet Private Line** (Cont'd)

20.1 **Dedicated SONET Optical Transport Service (DSOTS)#** (Cont'd)

(K) Rates and Charges (Cont'd)

(5) Optical Transport Channels
Single/Multi-Port Interface (Cont'd)

(a) Monthly Rates (Cont'd)
(Jurisdiction: Illinois)

Interface Type		Category I Monthly Rate 3-Year Term
Protected SONET OC3/OC3c	*	$1,400.00
Protected SONET OC12/OC12c	*	1,950.00
Protected SONET OC48/OC48c	*	4,100.00
Protected SONET OC192/OC192c		7,000.00
Protected 1 Gbps FICON		4,200.00
Protected 2 Gbps FICON		4,200.00
Protected Fiber Channel		4,200.00
Protected 2 Gbps Fiber Channel		4,200.00
Protected FDDI		4,200.00
Protected 1.06 Gbps ISC		4,200.00
Protected 2 Gbps ISC3		4,200.00
Protected Fast Ethernet		4,200.00
Protected Gigabit Ethernet		4,200.00
Protected 10 Gigabit Ethernet LAN-PHY/WAN-PHY		7,000.00
Protected D1 Video		4,200.00
Protected Multi-Port Facility		5,700.00
Protected Multi-Port Channel		
ESCON		225.00
Fiber Channel		225.00
FDDI		225.00
Fast Ethernet		225.00
D1 Video		225.00

* Concatenation not available on Switched interfaces.

Service availability limited. Refer to # footnote on Page 20-80.

© 2022 Frontier Communications Parent, Inc. All rights reserved.

ACCESS SERVICE

20. **Ethernet Private Line** (Cont'd)

20.1 **Dedicated SONET Optical Transport Service (DSOTS)#** (Cont'd)

(K) Rates and Charges (Cont'd)

(5) Optical Transport Channels
Single/Multi-Port Interface (Cont'd)

(a) Monthly Rates (Cont'd)
(Jurisdiction: Illinois)

Interface Type		Category I Monthly Rate 5-Year Term
Unprotected SONET OC3/OC3c	*	$ 450.00
Unprotected SONET OC12/OC12c	*	725.00
Unprotected SONET OC48/OC48c	*	1,870.00
Unprotected SONET OC192/OC192c	*	4,100.00
Unprotected 1 Gbps FICON		1,800.00
Unprotected 2 Gbps FICON		1,900.00
Unprotected Fiber Channel		1,800.00
Unprotected 2 Gbps Fiber Channel		1,900.00
Unprotected ETR/CLO		1,800.00
Unprotected FDDI		1,800.00
Unprotected 1.06 Gbps ISC		1,800.00
Unprotected 2 Gbps ISC3		1,900.00
Unprotected Fast Ethernet		1,800.00
Unprotected Gigabit Ethernet		1,800.00
Unprotected 10 Gigabit Ethernet		
LAN-PHY/WAN-PHY		4,100.00
Unprotected D1 Video		1,800.00
Unprotected Multi-Port Facility		2,500.00
Unprotected Multi Port Channel		
ESCON		225.00
Fiber Channel		225.00
FDDI		225.00
Fast Ethernet		225.00
D1 Video		225.00

* Concatenation not available on Switched interfaces.

Service availability limited. Refer to # footnote on Page 20-80.

© 2022 Frontier Communications Parent, Inc. All rights reserved.

ACCESS SERVICE

20. **Ethernet Private Line** (Cont'd)

20.1 **Dedicated SONET Optical Transport Service (DSOTS)#** (Cont'd)

(K) Rates and Charges (Cont'd)

(5) Optical Transport Channels
Single/Multi-Port Interface (Cont'd)

(a) Monthly Rates (Cont'd)
(Jurisdiction: Illinois)

Interface Type		Category I Monthly Rate 5-Year Term
Protected SONET OC3/OC3c	*	$ 725.00
Protected SONET OC12/OC12c	*	1,000.00
Protected SONET OC48/OC48c	*	2,150.00
Protected SONET OC192/OC192		5,600.00
Protected 1 Gbps FICON		2,200.00
Protected 2 Gbps FICON		2,300.00
Protected Fiber Channel		2,200.00
Protected 2Gbps Fiber Channel		2,300.00
Protected FDDI		2,200.00
Protected 1.06 Gbps ISC		2,200.00
Protected 2 Gbps ISC3		2,300.00
Protected Fast Ethernet		2,200.00
Protected Gigabit Ethernet		2,200.00
Protected 10 Gigabit Ethernet		
LAN-PHY/WAN-PHY		5,600.00
Protected D1 Video		2,200.00
Protected Multi-Port Facility		3,000.00
Protected Multi-Port Channel		
ESCON		225.00
Fiber Channel		225.00
FDDI		225.00
Fast Ethernet		225.00
D1 Video		225.00

* Concatenation not available on Switched interfaces.

Service availability limited. Refer to # footnote on Page 20-80.

© 2022 Frontier Communications Parent, Inc. All rights reserved.

ACCESS SERVICE

20. **Ethernet Private Line** (Cont'd)

20.1 **Dedicated SONET Optical Transport Service (DSOTS)#**(Cont'd)

(K) Rates and Charges (Cont'd)

(5) Optical Transport Channels
Single/Multi-Port Interface (Cont'd)

(a) Monthly Rates (Cont'd)
(Jurisdiction: Illinois)

Interface Type		Category I Monthly Rate 7-Year Term
Unprotected SONET OC3/OC3c	*	$ 400.00
Unprotected SONET OC12/OC12c	*	650.00
Unprotected SONET OC48/OC48c	*	1,625.00
Unprotected SONET OC192OC192c	*	3,250.00
Unprotected 1 Gbps FICON		1,600.00
Unprotected 2 Gbps FICON		1,600.00
Unprotected Fiber Channel		1,600.00
Unprotected 2 Gbps Fiber Channel		1,600.00
Unprotected ETR/CLO		1,600.00
Unprotected FDDI		1,600.00
Unprotected 1.06 Gbps ISC		1,600.00
Unprotected 2 Gbps ISC3		1,600.00
Unprotected Fast Ethernet		1,600.00
Unprotected Gigabit Ethernet		1,600.00
Unprotected 10 Gigabit Ethernet		
LAN-PHY/WAN-PHY		3,250.00
Unprotected D1 Video		1,600.00
Unprotected Multi-Port Facility		2,200.00
Unprotected Multi-Port Channel		
ESCON		225.00
Fiber Channel		225.00
FDDI		225.00
Fast Ethernet		225.00
D1 Video		225.00

* Concatenation not available on Switched interfaces.

Service availability limited. Refer to # footnote on Page 20-80.

© 2022 Frontier Communications Parent, Inc. All rights reserved.

ACCESS SERVICE

20. **Ethernet Private Line** (Cont'd)

20.1 **Dedicated SONET Optical Transport Service (DSOTS)#**(Cont'd)

(K) Rates and Charges (Cont'd)

(5) Optical Transport Channels
Single/Multi-Port Interface (Cont'd)

(a) Monthly Rates (Cont'd)
(Jurisdiction: Illinois)

Interface Type		Category I Monthly Rate 7-Year Term
Protected SONET OC3/OC3c	*	$ 650.00
Protected SONET OC12/OC12c	*	900.00
Protected SONET OC48/OC48c	*	1,925.00
Protected SONET OC192/OC192c		4,750.00
Protected 1 Gbps FICON		1,950.00
Protected 2 Gbps FICON		1,950.00
Protected Fiber Channel		1,950.00
Protected 2 Gbps Fiber Channel		1,950.00
Protected FDDI		1,950.00
Protected 1.06 Gbps ISC		1,950.00
Protected 2 Gbps ISC3		1,950.00
Protected Fast Ethernet		1,950.00
Protected Gigabit Ethernet		1,950.00
Protected 10 Gigabit Ethernet		
LAN-PHY/WAN-PHY		4,750.00
Protected D1 Video		1,950.00
Protected Multi-Port Facility		2,700.00
Protected Multi-Port Channel		
ESCON		225.00
Fiber Channel		225.00
FDDI		225.00
Fast Ethernet		225.00
D1 Video		225.00

* Concatenation not available on Switched interfaces.

Service availability limited. Refer to # footnote on Page 20-80.

© 2022 Frontier Communications Parent, Inc. All rights reserved.

ACCESS SERVICE

20. **Ethernet Private Line** (Cont'd)

20.1 **Dedicated SONET Optical Transport Service (DSOTS)#** (Cont'd)

(K) Rates and Charges (Cont'd)

(5) Optical Transport Channels
Single/Multi-Port Interface (Cont'd)

(a) Monthly Rates (Cont'd)
(Jurisdiction: Illinois)

Interface Type		Category II Monthly Rate 3-Year Term
Unprotected SONET OC3/OC3c	*	$1,270.00
Unprotected SONET OC12/OC12c	*	1,400.00
Unprotected SONET OC48/OC48c	*	2,130.00
Unprotected SONET OC192/OC192c	*	7,330.00
Unprotected 1 Gbps FICON		2,400.00
Unprotected 2 Gbps FICON		2,400.00
Unprotected Fiber Channel		2,400.00
Unprotected 2Gbps Fiber Channel		2,400.00
Unprotected ETR/CLO		2,400.00
Unprotected FDDI		2,400.00
Unprotected 1.06 Gbps ISC		2,400.00
Unprotected 2Gbps ISC3		2,400.00
Unprotected Fast Ethernet		2,400.00
Unprotected Gigabit Ethernet		2,400.00
Unprotected 10 Gigabit Ethernet LAN-PHY/WAN-PHY		7,330.00
Unprotected D1 Video		2,400.00
Unprotected Multi-Port Facility		3,330.00
Unprotected Multi-Port Channel		
ESCON		225.00
Fiber Channel		225.00
FDDI		225.00
Fast Ethernet		225.00
D1 Video		225.00

* Concatenation not available on Switched interfaces.

Service availability limited. Refer to # footnote on Page 20-80.

© 2022 Frontier Communications Parent, Inc. All rights reserved.

ACCESS SERVICE

20. **Ethernet Private Line** (Cont'd)

20.1 **Dedicated SONET Optical Transport Service (DSOTS)#** (Cont'd)

(K) Rates and Charges (Cont'd)

(5) Optical Transport Channels
Single/Multi-Port Interface (Cont'd)

(a) Monthly Rates (Cont'd)
(Jurisdiction: Illinois)

Interface Type		Category II Monthly Rate 3-Year Term
Protected SONET OC3/OC3c	*	$ 1,600.00
Protected SONET OC12/OC12c	*	2,470.00
Protected SONET OC48/OC48c	*	3,330.00
Protected SONET OC192/OC192c		14,530.00
Protected 1 Gbps FICON		2,930.00
Protected 2 Gbps FICON		4,070.00
Protected Fiber Channel		2,930.00
Protected 2 Gbps Fiber Channel		4,070.00
Protected FDDI		2,930.00
Protected 1.06 Gbps ISC		4,070.00
Protected 2 Gbps ISC3		4,070.00
Protected Fast Ethernet		2,930.00
Protected Gigabit Ethernet		2,930.00
Protected 10 Gigabit Ethernet LAN-PHY/WAN-PHY		14,530.00
Protected D1 Video		2,930.00
Protected Multi-Port Facility		4,000.00
Protected Multi-Port Channel		
ESCON		225.00
Fiber Channel		225.00
FDDI		225.00
Fast Ethernet		225.00
D1 Video		225.00

* Concatenation not available on Switched interfaces.

Service availability limited. Refer to # footnote on Page 20-80.

© 2022 Frontier Communications Parent, Inc. All rights reserved.

ACCESS SERVICE

20. **Ethernet Private Line** (Cont'd)

20.1 **Dedicated SONET Optical Transport Service (DSOTS)#**(Cont'd)

(K) Rates and Charges (Cont'd)

(5) Optical Transport Channels
Single/Multi-Port Interface (Cont'd)

(a) Monthly Rates (Cont'd)
(Jurisdiction: Illinois)

Interface Type		Category II Monthly Rate 5-Year Term
Unprotected SONET OC3/OC3c	*	$ 950.00
Unprotected SONET OC12/OC12c	*	1,050.00
Unprotected SONET OC48/OC48c	*	1,600.00
Unprotected SONET OC192/OC192c	*	5,500.00
Unprotected 1 Gbps FICON		1,800.00
Unprotected 2 Gbps FICON		1,800.00
Unprotected Fiber Channel		1,800.00
Unprotected 2 Gbps Fiber Channel		1,800.00
Unprotected ETR/CLO		1,800.00
Unprotected FDDI		1,800.00
Unprotected 1.06 Gbps ISC		1,800.00
Unprotected 2 Gbps ISC3		1,800.00
Unprotected Fast Ethernet		1,800.00
Unprotected Gigabit Ethernet		1,800.00
Unprotected 10 Gigabit Ethernet		
LAN-PHY/WAN-PHY		5,500.00
Unprotected D1 Video		1,800.00
Unprotected Multi-Port Facility		2,500.00
Unprotected Multi Port Channel		
ESCON		225.00
Fiber Channel		225.00
FDDI		225.00
Fast Ethernet		225.00
D1 Video		225.00

* Concatenation not available on Switched interfaces.

Service availability limited. Refer to # footnote on Page 20-80.

© 2022 Frontier Communications Parent, Inc. All rights reserved.

ACCESS SERVICE

20. **Ethernet Private Line** (Cont'd)

20.1 **Dedicated SONET Optical Transport Service (DSOTS)#**(Cont'd)

(K) Rates and Charges (Cont'd)

(5) Optical Transport Channels
Single/Multi-Port Interface (Cont'd)

(a) Monthly Rates (Cont'd)
(Jurisdiction: Illinois)

Interface Type		Category II Monthly Rate 5-Year Term
Protected SONET OC3/OC3c	*	$ 1,200.00
Protected SONET OC12/OC12c	*	1,850.00
Protected SONET OC48/OC48c	*	2,500.00
Protected SONET OC192/OC192		10,900.00
Protected 1 Gbps FICON		2,200.00
Protected 2 Gbps FICON		3,050.00
Protected Fiber Channel		2,200.00
Protected 2Gbps Fiber Channel		3,050.00
Protected FDDI		2,200.00
Protected 1.06 Gbps ISC		3,050.00
Protected 2 Gbps ISC3		3,050.00
Protected Fast Ethernet		2,200.00
Protected Gigabit Ethernet		2,200.00
Protected 10 Gigabit Ethernet LAN-PHY/WAN-PHY		10,900.00
Protected D1 Video		2,200.00
Protected Multi-Port Facility		3,000.00
Protected Multi-Port Channel		
ESCON		225.00
Fiber Channel		225.00
FDDI		225.00
Fast Ethernet		225.00
D1 Video		225.00

* Concatenation not available on Switched interfaces.

Service availability limited. Refer to # footnote on Page 20-80.

© 2022 Frontier Communications Parent, Inc. All rights reserved.

ACCESS SERVICE

20. **Ethernet Private Line** (Cont'd)

20.1 **Dedicated SONET Optical Transport Service (DSOTS)#**(Cont'd)

(K) Rates and Charges (Cont'd)

(5) Optical Transport Channels
Single/Multi-Port Interface (Cont'd)

(a) Monthly Rates (Cont'd)
(Jurisdiction: Illinois)

Interface Type		Category II Monthly Rate 7-Year Term
Unprotected SONET OC3/OC3c	*	$ 850.00
Unprotected SONET OC12/OC12c	*	950.00
Unprotected SONET OC48/OC48c	*	1,400.00
Unprotected SONET OC192OC192c	*	5,300.00
Unprotected 1 Gbps FICON		1,600.00
Unprotected 2 Gbps FICON		1,600.00
Unprotected Fiber Channel		1,600.00
Unprotected 2 Gbps Fiber Channel		1,600.00
Unprotected ETR/CLO		1,600.00
Unprotected FDDI		1,600.00
Unprotected 1.06 Gbps ISC		1,600.00
Unprotected 2 Gbps ISC3		1,600.00
Unprotected Fast Ethernet		1,600.00
Unprotected Gigabit Ethernet		1,600.00
Unprotected 10 Gigabit Ethernet		
LAN-PHY/WAN-PHY		5,300.00
Unprotected D1 Video		1,600.00
Unprotected Multi-Port Facility		2,200.00
Unprotected Multi-Port Channel		
ESCON		225.00
Fiber Channel		225.00
FDDI		225.00
Fast Ethernet		225.00
D1 Video		225.00

* Concatenation not available on Switched interfaces.

Service availability limited. Refer to # footnote on Page 20-80.

© 2022 Frontier Communications Parent, Inc. All rights reserved.

ACCESS SERVICE

20. **Ethernet Private Line** (Cont'd)

20.1 **Dedicated SONET Optical Transport Service (DSOTS)#** (Cont'd)

(K) Rates and Charges (Cont'd)

(5) Optical Transport Channels
Single/Multi-Port Interface (Cont'd)

(a) Monthly Rates (Cont'd)
(Jurisdiction: Illinois)

Interface Type		Category II Monthly Rate 7-Year Term
Protected SONET OC3/OC3c	*	$ 1,100.00
Protected SONET OC12/OC12c	*	1,750.00
Protected SONET OC48/OC48c	*	2,300.00
Protected SONET OC192/OC192c		10,700.00
Protected 1 Gbps FICON		1,950.00
Protected 2 Gbps FICON		3,000.00
Protected Fiber Channel		1,950.00
Protected 2 Gbps Fiber Channel		3,000.00
Protected FDDI		1,950.00
Protected 1.06 Gbps ISC		3,000.00
Protected 2 Gbps ISC3		3,000.00
Protected Fast Ethernet		1,950.00
Protected Gigabit Ethernet		1,950.00
Protected 10 Gigabit Ethernet		
LAN-PHY/WAN-PHY		10,700.00
Protected D1 Video		1,950.00
Protected Multi-Port Facility		2,700.00
Protected Multi-Port Channel		
ESCON		225.00
Fiber Channel		225.00
FDDI		225.00
Fast Ethernet		225.00
D1 Video		225.00

* Concatenation not available on Switched interfaces.

Service availability limited. Refer to # footnote on Page 20-80.

© 2022 Frontier Communications Parent, Inc. All rights reserved.

ACCESS SERVICE

20. **Ethernet Private Line** (Cont'd)

20.1 **Dedicated SONET Optical Transport Service (DSOTS)#** (Cont'd)

(K) Rates and Charges (Cont'd)

(5) Optical Transport Channels
Single/Multi-Port Interface (Cont'd)

(b) Nonrecurring Charges
(Jurisdiction: Illinois)

(1) Initial Installation Charges,
Per optical transport channel

Interface Type			Category I Nonrecurring Charge
Unprotected SONET OC3/OC3c		*	$1.00
Unprotected SONET OC12/OC12c		*	1.00
Unprotected SONET OC48/OC48c		*	1.00
Unprotected SONET OC192/OC192c	*		1.00
Unprotected 1 Gbps FICON			1.00
Unprotected 2 Gbps FICON			1.00
Unprotected Fiber Channel			1.00
Unprotected 2 Gbps Fiber Channel			1.00
Unprotected ETR/CLO			1.00
Unprotected FDDI			1.00
Unprotected 1.06 Gbps ISC			1.00
Unprotected 2 Gbps ISC3			1.00
Unprotected Fast Ethernet			1.00
Unprotected Gigabit Ethernet			1.00
Unprotected 10 Gigabit Ethernet			
LAN-PHY/WAN-PHY			1.00
Unprotected D1 Video			1.00
Unprotected Multi-Port Facility			1.00
Unprotected Multi-Port Channel			
ESCON			1.00
Fiber Channel			1.00
FDDI			1.00
Fast Ethernet			1.00
D1 Video			1.00

* Concatenation not available on Switched interfaces.

Service availability limited. Refer to # footnote on Page 20-80.

© 2022 Frontier Communications Parent, Inc. All rights reserved.

ACCESS SERVICE

20. **Ethernet Private Line** (Cont'd)

20.1 **Dedicated SONET Optical Transport Service (DSOTS)#**(Cont'd)

(K) Rates and Charges (Cont'd)

(5) Optical Transport Channels
Single/Multi-Port Interface (Cont'd)

(b) Nonrecurring Charges (Cont'd)
(Jurisdiction: Illinois)

(1) Initial Installation Charges,
Per optical transport channel (Cont'd)

Interface Type		Category I Nonrecurring Charge
Protected SONET OC3/OC3c	*	$1.00
Protected SONET OC12/OC12c	*	1.00
Protected SONET OC48/OC48c	*	1.00
Protected SONET OC192/OC192c		1.00
Protected 1 Gbps FICON		1.00
Protected 2 Gbps FICON		1.00
Protected Fiber Channel		1.00
Protected 2 Gbps Fiber Channel		1.00
Protected FDDI		1.00
Protected 1.06 Gbps ISC		1.00
Protected 2 Gbps ISC3		1.00
Protected Fast Ethernet		1.00
Protected Gigabit Ethernet		1.00
Protected 10 Gigabit Ethernet		
LAN-PHY/WAN-PHY		1.00
Protected D1 Video		1.00
Protected Multi-Port Facility		1.00
Protected Multi-Port Channel		
ESCON		1.00
Fiber Channel		1.00
FDDI		1.00
Fast Ethernet		1.00
D1 Video		1.00

* Concatenation not available on Switched interfaces.

Service availability limited. Refer to # footnote on Page 20-80.

© 2022 Frontier Communications Parent, Inc. All rights reserved.

ACCESS SERVICE

20. **Ethernet Private Line** (Cont'd)

20.1 **Dedicated SONET Optical Transport Service (DSOTS)#**(Cont'd)

(K) Rates and Charges (Cont'd)

(5) Optical Transport Channels
Single/Multi-Port Interface (Cont'd)

(b) Nonrecurring Charges (Cont'd)
(Jurisdiction: Illinois)

(1) Initial Installation Charges,
Per optical transport channel (Cont'd)

Interface Type			Category II Nonrecurring Charge
Unprotected SONET OC3/OC3c		*	$1.00
Unprotected SONET OC12/OC12c		*	1.00
Unprotected SONET OC48/OC48c		*	1.00
Unprotected SONET OC192/OC192c	*		1.00
Unprotected 1 Gbps FICON			1.00
Unprotected 2 Gbps FICON			1.00
Unprotected Fiber Channel			1.00
Unprotected 2 Gbps Fiber Channel			1.00
Unprotected ETR/CLO			1.00
Unprotected FDDI			1.00
Unprotected 1.06 Gbps ISC			1.00
Unprotected 2 Gbps ISC3			1.00
Unprotected Fast Ethernet			1.00
Unprotected Gigabit Ethernet			1.00
Unprotected 10 Gigabit Ethernet			
LAN-PHY/WAN-PHY			1.00
Unprotected D1 Video			1.00
Unprotected Multi-Port Facility			1.00
Unprotected Multi-Port Channel			
ESCON			1.00
Fiber Channel			1.00
FDDI			1.00
Fast Ethernet			1.00
D1 Video			1.00

* Concatenation not available on Switched interfaces.

Service availability limited. Refer to # footnote on Page 20-80.

© 2022 Frontier Communications Parent, Inc. All rights reserved.

ACCESS SERVICE

20. **Ethernet Private Line** (Cont'd)

20.1 **Dedicated SONET Optical Transport Service (DSOTS)#** (Cont'd)

(K) Rates and Charges (Cont'd)

(5) Optical Transport Channels
Single/Multi-Port Interface (Cont'd)

(b) Nonrecurring Charges (Cont'd)
(Jurisdiction: Illinois)

(1) Initial Installation Charges,
Per optical transport channel (Cont'd)

Interface Type		Category II Nonrecurring Charge
Protected SONET OC3/OC3c	*	$1.00
Protected SONET OC12/OC12c	*	1.00
Protected SONET OC48/OC48c	*	1.00
Protected SONET OC192/OC192c		1.00
Protected 1 Gbps FICON		1.00
Protected 2 Gbps FICON		1.00
Protected Fiber Channel		1.00
Protected 2 Gbps Fiber Channel		1.00
Protected FDDI		1.00
Protected 1.06 Gbps ISC		1.00
Protected 2 Gbps ISC3		1.00
Protected Fast Ethernet		1.00
Protected Gigabit Ethernet		1.00
Protected 10 Gigabit Ethernet		
LAN-PHY/WAN-PHY		1.00
Protected D1 Video		1.00
Protected Multi-Port Facility		1.00
Protected Multi-Port Channel		
ESCON		1.00
Fiber Channel		1.00
FDDI		1.00
Fast Ethernet		1.00
D1 Video		1.00

* Concatenation not available on Switched interfaces.

Service availability limited. Refer to # footnote on Page 20-80.

© 2022 Frontier Communications Parent, Inc. All rights reserved.

ACCESS SERVICE

20. **Ethernet Private Line** (Cont'd)

20.1 **Dedicated SONET Optical Transport Service (DSOTS)#** (Cont'd)

(K) Rates and Charges (Cont'd)

(5) Optical Transport Channels
Single/Multi-Port Interface (Cont'd)

(b) Nonrecurring Charges (Cont'd)
(Jurisdiction: Illinois)

(2) Subsequent Installation Charges,
Per optical transport channel

Interface Type		Category I Nonrecurring Charge
Unprotected SONET OC3/OC3c	*	$1.00
Unprotected SONET OC12/OC12c	*	1.00
Unprotected SONET OC48/OC48c	*	1.00
Unprotected SONET OC192/OC192c	*	1.00
Unprotected 1 Gbps FICON		1.00
Unprotected 2 Gbps FICON		1.00
Unprotected Fiber Channel		1.00
Unprotected 2 Gbps Fiber Channel		1.00
Unprotected ETR/CLO		1.00
Unprotected FDDI		1.00
Unprotected 1.06 Gbps ISC		1.00
Unprotected 2 Gbps ISC3		1.00
Unprotected Fast Ethernet		1.00
Unprotected Gigabit Ethernet		1.00
Unprotected 10 Gigabit Ethernet		
LAN-PHY/WAN-PHY		1.00
Unprotected D1 Video		1.00
Unprotected Multi-Port Facility		1.00
Unprotected Multi-Port Channel		
ESCON		1.00
Fiber Channel		1.00
FDDI		1.00
Fast Ethernet		1.00
D1 Video		1.00

* Concatenation not available on Switched interfaces.

Service availability limited. Refer to # footnote on Page 20-80.

© 2022 Frontier Communications Parent, Inc. All rights reserved.

ACCESS SERVICE

20. **Ethernet Private Line** (Cont'd)

20.1 **Dedicated SONET Optical Transport Service (DSOTS)#**(Cont'd)

(K) Rates and Charges (Cont'd)

(5) Optical Transport Channels
Single/Multi-Port Interface (Cont'd)

(b) Nonrecurring Charges (Cont'd)
(Jurisdiction: Illinois)

(2) Subsequent Installation Charges,
Per optical transport channel (Cont'd)

Interface Type		Category I Nonrecurring Charge
Protected SONET OC3/OC3c	*	$1.00
Protected SONET OC12/OC12c	*	1.00
Protected SONET OC48/OC48c	*	1.00
Protected SONET OC192/OC192c		1.00
Protected 1 Gbps FICON		1.00
Protected 2 Gbps FICON		1.00
Protected Fiber Channel		1.00
Protected 2 Gbps Fiber Channel		1.00
Protected FDDI		1.00
Protected 1.06 Gbps ISC		1.00
Protected 2 Gbps ISC3		1.00
Protected Fast Ethernet		1.00
Protected Gigabit Ethernet		1.00
Protected 10 Gigabit Ethernet		
LAN-PHY/WAN-PHY		1.00
Protected D1 Video		1.00
Protected Multi-Port Facility		1.00
Protected Multi-Port Channel		
ESCON		1.00
Fiber Channel		1.00
FDDI		1.00
Fast Ethernet		1.00
D1 Video		1.00

* Concatenation not available on Switched interfaces.

Service availability limited. Refer to # footnote on Page 20-80.

© 2022 Frontier Communications Parent, Inc. All rights reserved.

ACCESS SERVICE

20. **Ethernet Private Line** (Cont'd)

20.1 **Dedicated SONET Optical Transport Service (DSOTS)#** (Cont'd)

(K) Rates and Charges (Cont'd)

(5) Optical Transport Channels
Single/Multi-Port Interface (Cont'd)

(b) Nonrecurring Charges (Cont'd)
(Jurisdiction: Illinois)

(2) Subsequent Installation Charges,
Per optical transport channel (Cont'd)

Interface Type		Category II Nonrecurring Charge
Unprotected SONET OC3/OC3c	*	$1.00
Unprotected SONET OC12/OC12c	*	1.00
Unprotected SONET OC48/OC48c	*	1.00
Unprotected SONET OC192/OC192c	*	1.00
Unprotected 1 Gbps FICON		1.00
Unprotected 2 Gbps FICON		1.00
Unprotected Fiber Channel		1.00
Unprotected 2 Gbps Fiber Channel		1.00
Unprotected ETR/CLO		1.00
Unprotected FDDI		1.00
Unprotected 1.06 Gbps ISC		1.00
Unprotected 2 Gbps ISC3		1.00
Unprotected Fast Ethernet		1.00
Unprotected Gigabit Ethernet		1.00
Unprotected 10 Gigabit Ethernet		
LAN-PHY/WAN-PHY		1.00
Unprotected D1 Video		1.00
Unprotected Multi-Port Facility		1.00
Unprotected Multi-Port Channel		
ESCON		1.00
Fiber Channel		1.00
FDDI		1.00
Fast Ethernet		1.00
D1 Video		1.00

* Concatenation not available on Switched interfaces.

Service availability limited. Refer to # footnote on Page 20-80.

© 2022 Frontier Communications Parent, Inc. All rights reserved.

ACCESS SERVICE

20. **Ethernet Private Line** (Cont'd)

20.1 **Dedicated SONET Optical Transport Service (DSOTS)#** (Cont'd)

(K) Rates and Charges (Cont'd)

(5) Optical Transport Channels
Single/Multi-Port Interface (Cont'd)

(b) Nonrecurring Charges (Cont'd)
(Jurisdiction: Illinois)

(2) Subsequent Installation Charges,
Per optical transport channel (Cont'd)

Interface Type		Category II Nonrecurring Charge
Protected SONET OC3/OC3c	*	$1.00
Protected SONET OC12/OC12c	*	1.00
Protected SONET OC48/OC48c	*	1.00
Protected SONET OC192/OC192c		1.00
Protected 1 Gbps FICON		1.00
Protected 2 Gbps FICON		1.00
Protected Fiber Channel		1.00
Protected 2 Gbps Fiber Channel		1.00
Protected FDDI		1.00
Protected 1.06 Gbps ISC		1.00
Protected 2 Gbps ISC3		1.00
Protected Fast Ethernet		1.00
Protected Gigabit Ethernet		1.00
Protected 10 Gigabit Ethernet		
LAN-PHY/WAN-PHY		1.00
Protected D1 Video		1.00
Protected Multi-Port Facility		1.00
Protected Multi-Port Channel		
ESCON		1.00
Fiber Channel		1.00
FDDI		1.00
Fast Ethernet		1.00
D1 Video		1.00

* Concatenation not available on Switched interfaces.

Service availability limited. Refer to # footnote on Page 20-80.

© 2022 Frontier Communications Parent, Inc. All rights reserved.

ACCESS SERVICE

20. **Ethernet Private Line** (Cont'd)

20.1 **Dedicated SONET Optical Transport Service (DSOTS)#** (Cont'd)

(L) Network Management Methods

The customer has the option of purchasing one of the following Network Management Methods for use with a Special Access DSOTS network provided by the Telephone Company in accordance with this Section 20.1. Only one of these features may be provided on a single DSOTS. In order to purchase one of the features, the customer must be subscribed to DSOTS and must use such DSOTS in conjunction with the selected feature.

- Customer Service Management (CSM) Optional Feature, as set forth in (L)(1) following.
- Direct TL1 Monitoring (DTM) Optional Feature, as set forth in (L)(2) following.

(1) Customer Service Management (CSM) Optional Feature

(a) Description

CSM provides a customer with real time information about the operational status of its DSOTS network. CSM provides a network view of real-time detection and reporting of network alarm conditions within the customer's DSOTS network. In addition, CSM provides the customer the ability for the customer to generate basic network performance reports for its DSOTS network. The customer may also request network performance reports that are customized to meet their specific needs under Section 20.1(L)(3)and 20.1(L)(4) following for Rates and Charges.

(b) Application of Rates and Charges

(1) A CSM monthly recurring charge applies, per full or partial ring, for each DSOTS provided with the CSM optional feature.

(2) A Node Setup charge applies, per primary or expansion node, for each node that is equipped with CSM at the time that CSM is initially established on the DSOTS.

(3) An Initial CSM Setup charge applies for establishment of the customer's initial CSM database partition. The initial CSM database partition includes setup for up to six (6) users.

(4) A Setup of Additional Users charge applies for the setup of up to six (6) additional users beyond those provided with the initial or additional database partitions.

(5) A Setup of Additional Partition charge applies for the setup of an additional CSM database partition created for the same customer. Each additional CSM database partition provides for the setup of up to six (6) additional users.

(6) An Add/Remove Node charge applies, per primary and expansion node, for each node that is added to, or removed from, an DSOTS ring equipped with CSM subsequent to the initial establishment of CSM. This charge also applies, per primary and expansion node, when the customer requests a change in Network Management Method (e.g., from CSM to DTM).

(7) A Consultation and Support charge applies for each thirty (30) minutes or fraction thereof that the customer requests Telephone Company consultation and support of its CSM network. This charge does not apply during initial setup of CSM.

Service availability limited. Refer to # footnote on Page 20-80.

© 2022 Frontier Communications Parent, Inc. All rights reserved.

ACCESS SERVICE

20. **Ethernet Private Line** (Cont'd)

20.1 **Dedicated SONET Optical Transport Service (DSOTS)#** (Cont'd)

(L) Network Management Methods (Cont'd)

(1) Customer Service Management (CSM) Optional Feature (Cont'd)

(c) Rate Regulations

(1) CSM is provided under a term plan of 3 years, 5 years or 7 years, as described following:

- The duration of the term plan for CSM must be the same duration as the term plan for the DSOTS nodes provided with CSM. At the expiration of its 3, 5 or 7 year term plans for CSM, the customer has the option of extending CSM with a coterminous end date as described following;

- The expiration date of each CSM added subsequent to the initial installation must be coterminous to the expiration date of the associated DSOTS, provided the addition is prior to the 21st month for a 3-year plan, prior to the 36th month for a 5-year plan, or prior to the 50th month for a 7-year plan. A CSM added after the aforementioned periods requires extension of the commitment period for the associated DSOTS in accordance with 20.1(l) preceding. Such extension results in the establishment of a new plan that includes both the DSOTS and the CSM under the same plan with the same expiration date.

(2) The customer may retrieve basic reports containing performance-monitoring information on its DSOTS network. Basic reports are available at no additional charge to the customer. The customer may also request that a report be customized to meet its particular needs. Rates and charges for customized reports are provided on an individual case basis (ICB) only.

(3) CSM is subject to termination liability if the service is disconnected prior to completion of the existing commitment period. The terms and conditions in (d) following apply to termination of CSM prior to completion of the existing commitment period. Changes in Network Management Method (e.g., from CSM to DTM) will be made without termination liability subject to the Add/Remove Node charge set forth in (L)(1)(b)(6) preceding.

(d) Terms and Conditions

(1) The customer must utilize Internet web access to connect its customer-provided terminal equipment to the Telephone Company's CSM management system. Access to the internet and any associated rates and charges are the responsibility of the customer. The customer is also responsible for obtaining communications software that is compatible with the software the Telephone Company utilizes to provide CSM. The Telephone Company will work cooperatively with the customer to determine compatibility of its communications software.

- Subject to the restrictions set forth in (L)(1)(c)(1) preceding, CSM is provided coincident with the installation of the associated DSOTS ring or may be added to an existing ring.

Service availability limited. Refer to # footnote on Page 20-80.

© 2022 Frontier Communications Parent, Inc. All rights reserved.

ACCESS SERVICE

20. **Ethernet Private Line** (Cont'd)

20.1 **Dedicated SONET Optical Transport Service (DSOTS)#** (Cont'd)

(L) Network Management Methods (Cont'd)

(2) Direct TL1 Monitoring (DTM) Optional Feature

(a) Description

DTM provides a customer with near real time information about the operational status of its DSOTS network over a TL1 connection. A TL1 connection is a machine-to-machine communication language protocol. The connection allows a customer to monitor its DSOTS network via a limited set of executable TL1 commands in order to query alarm and performance criteria.

(1) DTM enables the following:

- Near real time access to system-generated alarm and performance messages originating from the customer's DSOTS network elements.
- Query and response capability that enables two-way communications with the capability to poll and retrieve messages, such as command alarms and performance messages.
- Access to ring inventory information that will enable the customer to maintain its own inventory database containing network element configurations and usage records for active service channels.
- Notification that a power failure has occurred at an DSOTS network element and that the affected network element has reverted to battery backup.
- Ability to monitor the ring, as well as all service channels riding the ring.

(b) Application of Rates and Charges

(1) A DTM monthly recurring rate applies for each DSOTS provided with the DTM optional feature.

(2) A Node Setup charge applies, per primary or expansion node, for each node that is equipped with DTM at the time that DTM is initially established on the DSOTS.

(3) An Initial DTM Setup charge applies for establishment of the customer's initial DTM database partition.

(4) An Add/Remove Node charge applies, per primary and expansion node, for each node that is added to, or removed from, an DSOTS ring equipped with DTM subsequent to the initial establishment of DTM. This charge also applies, per primary and expansion node, when the customer requests a change in Network Management Method (e.g., from DTM to CSM).

(5) A Consultation and Support charge applies for each thirty (30) minutes or fraction thereof that the customer requests Telephone Company consultation and support of its DTM network. This charge does not apply during initial setup of DTM.

Service availability limited. Refer to # footnote on Page 20-80.

© 2022 Frontier Communications Parent, Inc. All rights reserved.

ACCESS SERVICE

20. **Ethernet Private Line** (Cont'd)

20.1 **Dedicated SONET Optical Transport Service (DSOTS)#** (Cont'd)

(L) Network Management Methods (Cont'd)

(2) Direct TL1 Monitoring (DTM) Optional Feature (Cont'd)

(c) Rate Regulations

(1) DTM is provided under a term plan of 3 years, 5 years or 7 years, as described following.

- The duration of the term plan for DTM must be the same duration as the term plan for the DSOTS nodes provided with DTM. At the expiration of its 3, 5 or 7 year term plans for DTM, the customer has the option of extending DTM with a coterminous end date as described following.

- The expiration date of each DTM added subsequent to the initial installation must be coterminous to the expiration date of the associated DSOTS, provided the addition is prior to the 21st month for a 3-year plan, prior to the 36th month for a 5-year plan, or prior to the 50th month for a 7-year plan. A DTM added after the aforementioned periods requires extension of the commitment period for the associated DSOTS in accordance with 20.1(I) preceding. Such extension results in the establishment of a new plan that includes both the DSOTS and the DTM under the same plan with the same expiration date.

(2) Termination liability will apply if DTM is removed prior to completion of the existing commitment period. The terms and conditions in 20.1(E) preceding apply to termination of DTM prior to completion of the existing commitment period. Changes in Network Management Method (e.g., from DTM to CSM) will be made without termination liability subject to the Add/Remove Node charge set forth in (L)(2)(b)(4) preceding.

(d) Terms and Conditions

(1) The customer must order two (2) Special Access Services as provided by the Telephone Company under Section 7 or provided by another carrier, in order to ensure secure, dedicated private line access and enable full redundancy for DTM. These Special Access lines must originate at the customer's designated premises and terminate at a DTM site designated by the Telephone Company with the terms and conditions of this Guide. The customer is responsible for procuring any additional services that may be necessary to connect the Special Access Service to the customer's designated premises.

(2) When requested by the customer, and where technically feasible to do so, the Telephone Company will provide encryption capabilities on the Special Access Services used to access DTM. The Telephone Company will specify any equipment or software required to provide encryption. Obtaining such equipment or software is the responsibility of the customer. The customer is also responsible for:

- security of any equipment, servers, systems or other facilities provided by the customer and which have access to the DTM network; and
- monitoring access to the DTM service using the facilities, systems, equipment or servers provided by the customers

Service availability limited. Refer to # footnote on Page 20-80.

© 2022 Frontier Communications Parent, Inc. All rights reserved.

ACCESS SERVICE

20. **Ethernet Private Line** (Cont'd)

20.1 **Dedicated SONET Optical Transport Service (DSOTS)#** (Cont'd)

(L) Network Management Methods (Cont'd)

(3) Rates and Charges, Customer Service Management Optional Feature (CSM)
(Jurisdiction: Illinois)

(a)	CSM, per primary ring		Monthly Rate
	3 year		$450.00
	5 year		450.00
	7 year		450.00
(b)	Customized Reports	(NOTE)	ICB
			Nonrecurring Charge
(c)	Node Setup, per primary or expansion node on the ring equipped during initial Cthod establishment		$200.00
(d)	Initial CSM Setup, first partition with up to 6 users		500.00
(e)	Setup of Additional Partition		500.00
(f)	Setup of Additional Users, up to 6 additional users		$350.00
(g)	Add/Remove Node, per primary or expansion node added to, or removed from, the CSM ring subsequent to initial establishment or for a Change in Network Management Method		200.00
(h)	Consultation and Support, each 30 minutes or fraction thereof		100.00
(i)	Change Network Management Method, from CSM to DTM, per node		200.00

NOTE to be assigned with the associated ICB.

Service availability limited. Refer to # footnote on Page 20-80.

© 2022 Frontier Communications Parent, Inc. All rights reserved.

ACCESS SERVICE

20. **Ethernet Private Line** (Cont'd)

20.1 **Dedicated SONET Optical Transport Service (DSOTS)#** (Cont'd)

(L) Network Management Methods (Cont'd)

(4) Rates and Charges, Direct TL1 Monitoring Optional Feature (DTM)
(Jurisdiction: Illinois)

		Monthly Rate
(a)	DTM, per primary ring	
	3 year	$450.00
	5 year	450.00
	7 year	450.00

		Nonrecurring Charge
(b)	Node Setup, per primary or expansion node on the ring equipped during initial establishment	$200.00
(c)	Initial DTM Setup, first partition with up to 6 users	500.00
(d)	Add/Remove Node, per primary or expansion node added to, or removed from, the DTM ring subsequent to initial establishment or for a Change in Network Management Method	200.00
(e)	Consultation and Support, each 30 minutes or fraction thereof	100.00
(f)	Change Network Management Method, from DTM to CSM, per node	200.00

Service availability limited. Refer to # footnote on Page 20-80.

© 2022 Frontier Communications Parent, Inc. All rights reserved.

ACCESS SERVICE

20. **Ethernet Private Line** (Cont'd)

20.2 **Dedicated SONET Ring (DSR) #**

(A) General

(1) Dedicated SONET Ring (DSR) provides a customer a dedicated high capacity customized network. The network is in a ring architecture or topology that assures survivability. Full rings may subtend (interconnect with) each other as described in (B)(4) following.

(2) DSR is an alternative to basic High Capacity Special Access point-to-point services between multiple customer locations. It is, therefore, rated discretely. Rate elements include enhanced nodes, ports and mileage between enhanced nodes. Rates are specified in 20.2(K) following.

(3) Definitions

Add/Drop Multiplexing, (ADM): a multiplexing function that allows lower level signals to be added or dropped from an optical carrier channel.

Enhanced node: a DSR rate element and a designation of either a customer location or Company wire center on a SONET ring that has Next Generation Add Drop Multiplexer (NGADM) capability. It is also the address of where a channelized (lower speed) service originates or terminates on a ring. Generally, the ring capacity determines the type of node.

Fiber path diversity: the provision of service using at least two fibers placed on physically separate paths, i.e., different conduit runs that do not pass through the same manhole(s). The cable paths are separated by at least 25 feet.

The following footnote is not applicable to the DS1, DS3, DS3 Transmux or STS1 Port, DS1, DS3 or STS1 Partial Ring Channel Mapping rate elements of DSR. Effective May 31, 2007, orders for new DSR are no longer permitted. The Telephone Company will continue to provide DSR pursuant to this Section 20.2 on any existing DSR that is in-service as of May 31, 2007, or any order for DSR that is placed with the Telephone Company prior to May 31, 2007 (collectively, Existing DSR), subject to the following conditions:

a. For any Existing DSR that is currently subscribed to a term plan (i.e., commitment periods of 3-, 5-, and 7-years), the Telephone Company will continue to provide the Existing DSR for an additional six (6) months beyond the expiration date of the customer's current commitment period, or until the customer replaces the Existing DSR with a comparable Telephone Company provided service, or discontinues service, whichever comes first. Subject to the availability of facilities and equipment, additions and/or changes to the Existing DSR are permitted during the current commitment period provided that such additions do not require a new commitment period or an extension to an existing commitment period.

b. For any Existing DSR whose term plan expired prior to May 31, 2007, but the Existing DSR continued on a month-to-month basis at prevailing rates, the Telephone Company will continue to provide the Existing DSR until November 30, 2007, or until the customer replaces the Existing DSR with a comparable Telephone Company provided service, or discontinues service, whichever comes first. Additions and/or changes are not permitted.

© 2022 Frontier Communications Parent, Inc. All rights reserved.

ACCESS SERVICE

20. **Ethernet Private Line** (Cont'd)

20.2 **Dedicated SONET Ring (DSR) #**

(A) General (Cont'd)

(3) Definitions (Cont'd)

Optical Carrier Rate, (OCn#): a SONET transmission signal/speed, line rate, or service. The rates are in multiples of an OC1, which is equivalent to an STS1 (51.84 Mbps), SONET's basic rate.

OC(#) Rate	Bandwidth Capacity
3	155.52 Mbps
12	622.08 Mbps
48	2.488 Gbps
192	9.952 Gbps

Optical Carrier Rate Concatenated, (OCn#c): a "clear channel" SONET transmission using only one framing format. Generally, an OC3 signal provides three STS1s frame formats with 3 overheads for a total capacity of 2268 bytes per Synchronous Payload envelope (SPE) frame; in an OC3c signal, one STS3c frame format is used with one overhead, increasing the total payload capacity to 2340 bytes per SPE frame.

OC48+3,OC192+3,OC192+12,and OC192+48: designations for enhanced nodes in ring-on-ring designs; the higher speed NGADM is part of the true ring, and the lower speed NGADM is connected for the purpose of mapping lower speed services onto the STS1s of the OC12, OC48 or OC192. Both nodes, the lower and higher speed node, of a ring-on-ring arrangement must be located in the same customer premises or wire center.

Port: a DSR rate element that denotes the interface at which a channelized or lower speed service terminates or originates at a DSR node.

Service availability limited. Refer to # footnote on Page 20-128.

© 2022 Frontier Communications Parent, Inc. All rights reserved.

ACCESS SERVICE

20. **Ethernet Private Line** (Cont'd)

20.2 **Dedicated SONET Ring (DSR) #** (Cont'd)

(A) General (Cont'd)

(3) Definitions (Cont'd)

Port Node: an arrangement on a DSR that interconnects the main DSR ring with a subtending DSR ring.

SONET, (Synchronous Optical NETwork): an international standard for the transmission of high capacity bandwidth over optical facilities. This synchronous transmission platform utilizes a modular multiplexing approach. Because of the large bandwidth, some of the payload is used to monitor, protect, manage and improve the transmission of the signal.

Subtending Ring: a DSR Service that subtends (interconnects with) a DSR main ring.

Synchronous Transport Signal Level, (STS1): a 51.84 Mbps signal that is the electrical equivalent of the OC1 or a DS3 with additional Mbps devoted to SONET overhead information. An STS1 can carry a DS3 or 28 DS1s when specifically formatted (Mapped). These DS1s may be accessed off-ring using the tariffed DS3 to DS1 multiplexing optional service or at an enhanced node via a DSR DS3 Transmux Port.

Virtual Tributary, (VT): A SONET structure designed for transport of sub-STS1 payloads. A DS1 is mapped into the SONET format using a VT1.5 as a packaging mechanism that is internal to the SONET signal.

GigE: an ethernet circuit offered at the port level over DSR rings. Ethernet frames are mapped into STS1, STS-N or STS-Nc SONET frames.

GigE Channel	Transport Bandwidth	Approximate Throughput	Effective SONET Payload Capacity
GigE-1	(1) STS1	50 Mbps	49.536 Mbps
GigE-3	(1) STS-3	150 Mbps	149.760 Mbps
GigE-6	(1) STS-6	300 Mbps	299.520 Mbps
GigE-9	(1) STS-9	450 Mbps	449.280 Mbps
GigE-12	(1) STS-12	600 Mbps	599.040 Mbps
GigE-24	(1) STS-24	1000 Mbps	1,198.080 Mbps

Service availability limited. Refer to # footnote on Page 20-128.

© 2022 Frontier Communications Parent, Inc. All rights reserved.

ACCESS SERVICE

20. **Ethernet Private Line** (Cont'd)

20.2 **Dedicated SONET Ring (DSR)** #(Cont'd)

(B) Service Description

(1) Full Ring

(a) DSR may provide connectivity to multiple customer designated locations (nodes). The minimum node requirement for a full ring DSR is as follows:

(1) For DSR rings provided wholly by the Telephone Company, the ring must be configured with a minimum of three nodes that are provided by the Telephone Company and are at different locations. One or more full rings may interconnect with each other in a subtending ring configuration as described in (B)(4) following. At least one of these nodes must be located in a Telephone Company central office (CO) and one must be located at a customer's designated location; or

(2) For DSR rings provided jointly by the Telephone Company and one or more other exchange telephone companies, the ring must be configured with a minimum of three nodes. A minimum of one node must be provided by the Telephone Company with that node being located in a Telephone Company CO and the remaining nodes may be provided by one or more of the other exchange telephone companies jointly providing the service. If more than one node is provided by the Telephone Company, the additional nodes may be located at either a customer designated location or in a Telephone Company CO. Jointly provided DSR rings must meet all of the same requirements that are set forth in this Guide for wholly provided DSR rings. This configuration is only allowed when the DSR ring is jointly provided by the Telephone Company and one or more other exchange telephone companies in a multiple company billing arrangement as set forth in Section 2.4.7.

Service availability limited. Refer to # footnote on Page 20-128.

© 2022 Frontier Communications Parent, Inc. All rights reserved.

ACCESS SERVICE

20. **Ethernet Private Line** (Cont'd)

20.2 **Dedicated SONET Ring (DSR)** # (Cont'd)

(B) Service Description (Cont'd)

(1) Full Ring (Cont'd)

(b) An example of a full Dedicated SONET Ring (DSR) is diagrammed below:

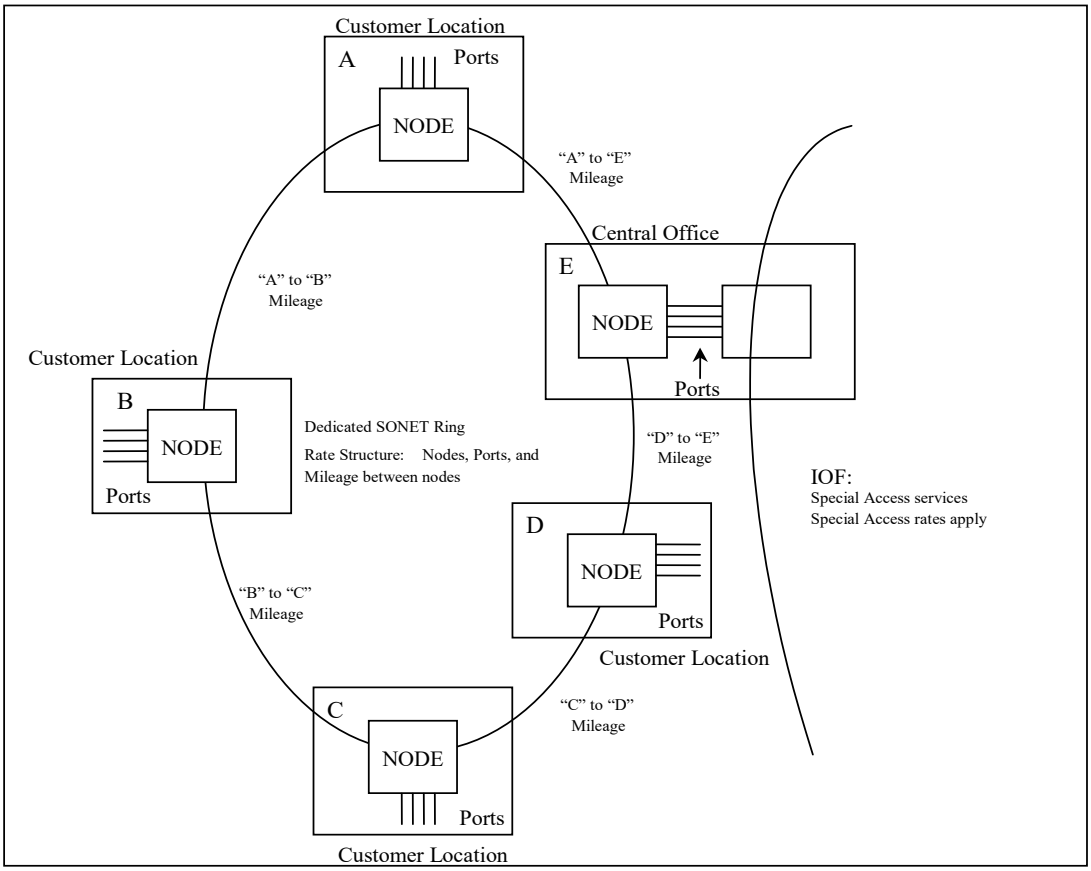

(T)

Service availability limited. Refer to # footnote on Page 20-128.

© 2022 Frontier Communications Parent, Inc. All rights reserved.

ACCESS SERVICE

20. **Ethernet Private Line** (Cont'd)

20.2 **Dedicated SONET Ring (DSR)** # (Cont'd)

(B) Service Description (Cont'd)

Partial Ring

(2)

(a) A partial DSR ring provides connectivity to multiple customer designated locations (nodes) between fiber meet locations at which high speed interconnection of the Telephone Company's backbone network facilities to the customer's facilities or the facilities of a third party occurs. Partial ring service may only be interconnected to (1) another partial ring provided by the Telephone Company or (2) ring facilities provided by the customer or third party. Subtending rings as described in (B)(4) following may not interconnect with, or be associated with, a partial ring. The portion of the ring provided by the customer or third party must use vendor equipment that matches the equipment used by the Telephone Company and must maintain the same vintage in software release as the Telephone Company. Upon written notice by the Telephone Company, the customer or third party will have sixty (60) days in which to complete the change out of any software release deployed by the Telephone Company.

(b) The partial ring must have a minimum of two devices provided by the Telephone Company (enhanced nodes or high speed interfaces) with a device at each fiber meet location and at least one node on the partial ring must be in a CO. When the partial ring is provided over a Dedicated SONET Optical Transport Service (DSOTS)or a Telephone Company provided DWDM ring service, the DSOTS/DWDM ring service device(s) are counted towards satisfying the minimum device requirement at each fiber meet location on the DSR partial ring. High speed interconnection may occur at a customer's designated premises, a Telephone Company central office or a location that is mutually agreeable to both the customer and the Telephone Company (such location will be designated as a premises for the purpose of administering the general regulations set forth in this Guide).

Fiber Meet

(c) When the fiber meet occurs at a customer's designated premises, the point of interconnection between the Telephone Company's facilities and the facilities of the customer or of a third party shall be a node.

(1)

(2) When the fiber meet occurs in a Telephone Company wire center, high speed interconnection from the device (DSR node, DSOTS/DWDM ring service node or DSOTS/DWDM ring service amplifier, as applicable) occurs at a collocation arrangement via fiber cross-connects between the Telephone Company's fiber optic facilities and the customer's or third party's facilities. Fiber Cross-connects are provided under Section 19.2 preceding.

Service availability limited. Refer to # footnote on Page 20-128.

© 2022 Frontier Communications Parent, Inc. All rights reserved.

ACCESS SERVICE

20. **Ethernet Private Line** (Cont'd)

20.2 **Dedicated SONET Ring (DSR)** #(Cont'd)

(B) Service Description (Cont'd)

(2) Partial Ring (Cont'd)

(c) Fiber Meet (Cont'd)

(3) When the fiber meet occurs at a mutually agreed upon location, the point of interconnection shall be a high speed (pass-through) interface.

(4) The Telephone Company's network design will define the optical parameters at the fiber meet locations. The Telephone Company is responsible for the quality and integrity of the high speed optical signal at the fiber meet where its facilities are interconnected to the facilities of the customer or of the third party. The Telephone Company bears no responsibility for the optical parameters beyond the fiber meet (i.e., in the facilities of the customer or of the third party). In the case of DSR ring that is jointly provided by the Telephone Company and one or more other exchange telephone companies in a multiple billing arrangement, as set forth in Section 2.4.7 preceding, the overall design and configuration of the DSR ring must be mutually agreeable to the Telephone Company, any other exchange telephone company(s) involved, and to the customer. The customer or third party is responsible for engineering its portion of the jointly provided ring. At customer or third-party's option, the Telephone Company will engineer the customer or third party's portion of the ring within the LATA subject to charges for Additional Labor as set forth in Section 6 preceding.

Service availability limited. Refer to # footnote on Page 20-128.

© 2022 Frontier Communications Parent, Inc. All rights reserved.

ACCESS SERVICE

20. **Ethernet Private Line** (Cont'd)

20.2 **Dedicated SONET Ring (DSR)** #(Cont'd)

(C) Service Components (Cont'd)

(2) Ports (Cont'd)

(c) Asymmetrical Ports (Cont'd)

(3) (Cont'd)

(c) When the APF is located in a Telephone Company wire center and the APF connects to a customer designated premises that is served by a different wire center, an asymmetrical port channel extension and mileage applies to extend the APF to the customer designated premises. Rates and charges for the asymmetrical port channel extension and mileage apply in addition to the rates and charges for the port as set forth in (D) following.

(d) When the APF is located in a Telephone Company wire center and the APF connects to an Expanded Interconnection arrangement that is located within the same wire center as the node, a port charge applies as set forth in (D) following.

(e) When the APF is located in a Telephone Company wire center and the APF connects to an Expanded Interconnection arrangement that is not located within the same wire center as the node, mileage applies to extend the APF to the Collocated Interconnection arrangement. Rates and charges for the mileage apply in addition to the rates and charges for the port as set forth in (D) following.

(f) For (C)(2)(c)(3)(c) through (e) preceding, channel termination or cross-connect charges apply in addition to the port, asymmetrical port channel extension, and mileage charges. Channel termination charges apply in accordance with Sections 6 and 7 preceding. Cross-connection to Expanded Interconnection Service arrangements apply in accordance with Section 17 preceding.

Service availability limited. Refer to # footnote on Page 20-128.

© 2022 Frontier Communications Parent, Inc. All rights reserved.

ACCESS SERVICE

20. **Ethernet Private Line** (Cont'd)

20.2 **Dedicated SONET Ring (DSR)** #(Cont'd)

(C) Service Components (Cont'd)

(2) Ports (Cont'd)

(c) Asymmetrical Ports (Cont'd)

(4) Asymmetrical ports are available in the following combinations:

Ring Capacity	APF Rate	Asymmetrical Port Combinations**
OC3 DSR Ring	N/A	DS3 Transmux - DS1*
	STS-1	STS1 - DS3 STS1 - DS1*
OC12 DSR Ring	N/A	STS1 - DS3 DS3 Transmux - DS1*
	OC3	OC3 - STS1 OC3 – DS3 OC3 - DS1* OC3 - GigE3* OC3 - GigE1*
OC48 DSR Ring	N/A	STS1 - DS3 DS3 Transmux - DS1*
	OC12	OC12 - OC3 OC12 – OC3c OC12 - STS1 OC12 - DS3 OC12 - DS1* OC12 – GigE12* OC12 – GigE9* OC12 - GigE6* OC12 - GigE3* OC12 - GigE1*
	OC3	OC3 - STS1 OC3 - DS3 OC3 - DS1* OC3 - GigE3* OC3 - GigE1*

* Requires enhanced node. For Ethernet (GigE) port options, the associated Ethernet Service must be SONET mapped.
** Concatenation is not available on Switched Access Ports
# Service availability limited. Refer to # footnote on Page 20-128.

© 2022 Frontier Communications Parent, Inc. All rights reserved.

ACCESS SERVICE

20. **Ethernet Private Line** (Cont'd)

20.2 **Dedicated SONET Ring (DSR)** #(Cont'd)

(C) Service Components (Cont'd)

(2) Ports (Cont'd)

(c) Asymmetrical Ports (Cont'd)

(4) (Cont'd)

Ring Capacity	APF Rate	Asymmetrical Port Combinations**
OC192 DSR Ring	N/A	STS1 - DS3
		DS3 Transmux - DS1*
	OC48	OC48 – OC12
		OC48 – OC12c
		OC48 – OC3
		OC48 – OC3c
		OC48 – STS1
		OC48 - DS3
		OC48 – DS1*
		OC48 – GigE24*
		OC48 – GigE12*
		OC48 – GigE9*
		OC48 - GigE6*
		OC48 - GigE3*
		OC48 - GigE1*
	OC12	OC12 – OC3
		OC12 – OC3c
		OC12 – STS1
		OC12 - DS3
		OC12 – DS1*
		OC12 – GigE12*
		OC12 – GigE9*
		OC12 - GigE6*
		OC12 - GigE3*
		OC12 - GigE1*
	OC3	OC3 – STS1
		OC3 - DS3
		OC3 – DS1*
		OC3 - GigE3*
		OC3 - GigE1*

* Requires enhanced node. For Ethernet (GigE) port options, the associated Ethernet Service must be SONET mapped.
** Concatenation is not available on Switched Access Ports
# Service availability limited. Refer to # footnote on Page 20-128.

© 2022 Frontier Communications Parent, Inc. All rights reserved.

ACCESS SERVICE

20. **Ethernet Private Line** (Cont'd)

20.2 **Dedicated SONET Ring (DSR)** #(Cont'd)

(C) Service Components (Cont'd)

(2) Ports (Cont'd)

(d) Transmux Ports

(1) The DS3 Transmux Port performs a DS3 to a DS1 conversion at a DSR node. The DS3 to DS1 conversion allows a single DSR DS3 Transmux port (which includes a DS3 Transmux Facility to which the DS1 circuits are mapped) to be a facility associated with up to twenty-eight (28) VT1.5 mapped DSR DS1 ports. Such DS3 Transmux facility will be provisioned upon ordering the associated DS3 Transmux port. Transmuxing is only available where suitable facilities and equipment exist to provide the DS3 Transmux Port. The DS3 Transmux port facility may connect to Switched or Special Access DS3 service as specified in Sections 6 and 7 preceding.

Service availability limited. Refer to # footnote on Page 20-128.

© 2022 Frontier Communications Parent, Inc. All rights reserved.

ACCESS SERVICE

20. **Ethernet Private Line** (Cont'd)

20.2 **Dedicated SONET Ring (DSR)** #(Cont'd)

(B) Service Description (Cont'd)

(2) Partial Ring (Cont'd)

(c) Fiber Meet (Cont'd)

(5) The customer must provide the Telephone Company with its fiber optic facility requirements (i.e., whether it will use single mode fiber or multi-mode fiber) prior to the Telephone Company ordering the necessary SONET network equipment to provide the requested service. The customer may utilize its own fiber optic facilities or the facilities of a third party.

(6) Interconnection to DSR partial ring services may occur (i) at the customer's designated premises for which interconnection will occur via a node; (ii) in a Telephone Company wire center for which interconnection from a device will occur at a collocation arrangement via fiber cross-connects as described in Section 17 preceding; or (iii) at a mutually agreed upon location where interconnection occurs via a high speed (pass-through) interface. Interconnection to other Telephone Company services may not occur at the mutually agreed upon fiber meet location utilizing a high speed interface.

(7) Interconnection to DSR partial ring service is limited to high speed fiber interconnection of the Telephone Company's backbone network fiber optic facilities and the fiber optic facilities of the customer or of a third party.

Service availability limited. Refer to # footnote on Page 20-128.

© 2022 Frontier Communications Parent, Inc. All rights reserved.

ACCESS SERVICE

20. **Ethernet Private Line** (Cont'd)

20.2 **Dedicated SONET Ring (DSR)** #(Cont'd)

(B) Service Description (Cont'd)

(2) Partial Ring (Cont'd)

(d) When ordering lower speed channels that originate at and terminate to nodes which are not within the partial ring provided by the Telephone Company, the customer must provide the Telephone Company with a copy of the order. This order provides the Telephone Company with authority to perform the necessary mapping of the channel through the partial ring to ensure continuity of the signal over the jointly provided ring. A Channel Mapping nonrecurring charge will apply for each channel mapped through the Telephone Company provided partial ring. Channel mapping charges do not apply when ordering channels that originate at and/or terminate to nodes on the Telephone Company's portion of the partial ring.

Service availability limited. Refer to # footnote on Page 20-128.

© 2022 Frontier Communications Parent, Inc. All rights reserved.

ACCESS SERVICE

20. **Ethernet Private Line** (Cont'd)

20.2 **Dedicated SONET Ring (DSR)** #(Cont'd)

(B) Service Description (Cont'd)

(2) Partial Ring (Cont'd)

(e) An example of a partial Dedicated SONET Ring is diagrammed below:

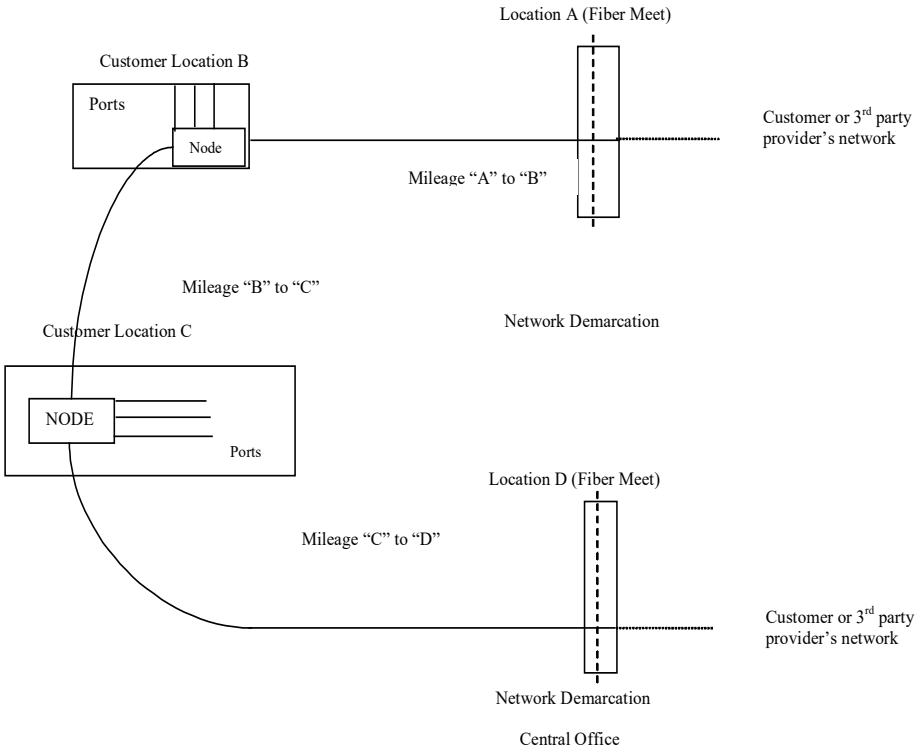

Service availability limited. Refer to # footnote on Page 20-128.

© 2022 Frontier Communications Parent, Inc. All rights reserved.

ACCESS SERVICE

20. **Ethernet Private Line** (Cont'd)

20.2 **Dedicated SONET Ring (DSR)** #(Cont'd)

(B) Service Description (Cont'd)

(3) Ring-On-Ring

When DSR is provided in a ring on ring design the following requirements apply:

- The lower speed ring must have a minimum of two enhanced nodes located at the customer premises or Company wire center; and
- The Company must provide the lower speed enhanced nodes; and
- Each lower speed node must be located at the same customer premises or Company wire center as its corresponding higher speed node.

(4) Subtending Rings

The customer may interconnect two (2) or more full rings in a subtending ring configuration subject to the following:

(a) One (1) of the DSR full rings must be designated by the customer as the main ring from which the other DSR full ring(s) will subtend. The main ring must be of equal or greater capacity than each DSR full ring that subtends the main ring. For example, a main ring that is an OC12 DSR can have an OC3 and/or OC12 subtending ring but can not have an OC48 subtending ring. The number of rings that can subtend a main ring may be limited by the type and capacity of the nodes and port configuration specific to the customer's overall DSR service configuration.

(b) Interconnection between the main ring and the subtending ring occurs via a port node. A port node provides high speed interconnection between an enhanced node on the main ring and the high speed facilities on the subtending ring, and applies in lieu of the enhanced node on the subtending ring at that location. Each subtending ring requires one port node at the point of interconnection to the enhanced node on the main ring. Interconnection between the main ring and a subtending ring may occur at a customer designated premises or within a Telephone Company wire center where such nodes are located. Up to two (2) points of interconnection are allowed per subtending ring. A port node is required per point of interconnection.

(c) Only DSR full rings that utilize suitably equipped enhanced nodes can be arranged in subtending ring configurations.

Service availability limited. Refer to # footnote on Page 20-128.

© 2022 Frontier Communications Parent, Inc. All rights reserved.

ACCESS SERVICE

20. **Ethernet Private Line** (Cont'd)

20.2 **Dedicated SONET Ring (DSR)** #(Cont'd)

(B) Service Description (Cont'd)

(4) Subtending Rings (Cont'd)

(d) Each ring included in a subtending ring configuration must be arranged as a unidirectional path switched ring (UPSR) and must use enhanced nodes. Bidirectional line switched rings (BLSR) may not be arranged in subtending ring configurations.

(e) DSR partial rings may not be arranged in subtending ring configurations.

(f) Where two (2) points of interconnection between the subtending ring and the main ring are provided, circuits originating on the main ring may be mapped to the subtending ring and circuits originating on the subtending ring may be mapped to the main ring. Channels mapped across the two (2) interconnecting nodes are subject to Dual Node Cross-connect Channel Mapping charges as described in (B)(4)(m) following.

(g) The main ring and any subtending rings associated with the main ring must individually meet the minimum requirement of three (3) nodes except that only one (1) node for the entire service configuration must be located in a Telephone Company wire center. For example, if the main ring has one (1) node located in a Telephone Company wire center and two (2) nodes located at customer designated premises, the subtending ring(s) need not have a node that is located in a Telephone Company wire center.

(1) When determining if the minimum number of nodes on a subtending ring has been met, the port node providing interconnection to the main ring is included in the count.

(2) When determining if the minimum number of nodes on a subtending ring has been met, the enhanced node on the main ring that interconnects with the subtending ring is not included in the count.

Service availability limited. Refer to # footnote on Page 20-128.

© 2022 Frontier Communications Parent, Inc. All rights reserved.

ACCESS SERVICE

20. **Ethernet Private Line** (Cont'd)

20.2 **Dedicated SONET Ring (DSR)** #(Cont'd)

(B) Service Description (Cont'd)

(4) Subtending Rings (Cont'd)

(h) Each subtending ring may only interconnect with one (1) main ring.

(i) Subtending ring configurations may be established using new DSR full rings, existing DSR full rings, or a combination of new and existing DSR full rings.

(j) All DSR rings in the same subtending ring configuration must be billed to the same customer.

(k) An example of a subtending ring configuration with two (2) points of interconnection to the main ring is diagrammed below:

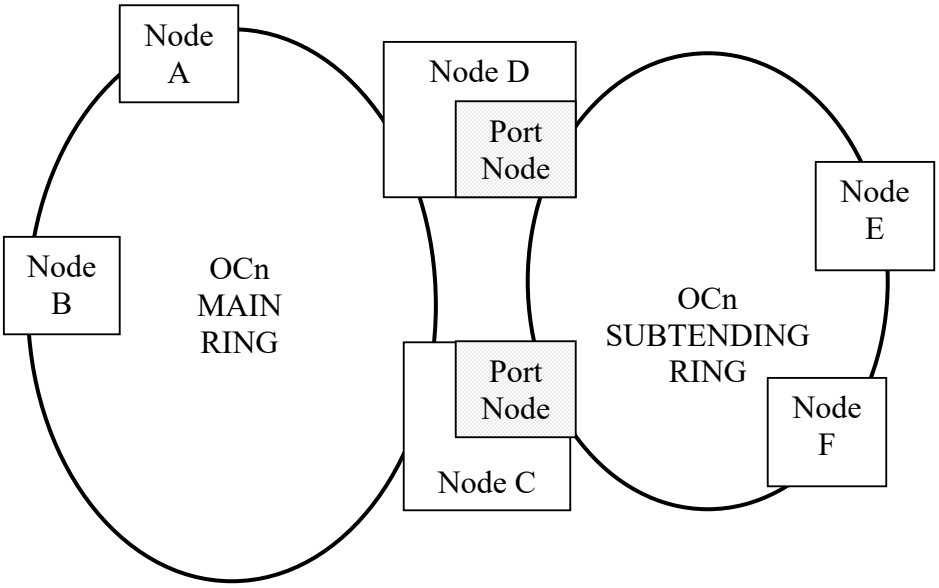

Applicable rate elements:
- Nodes (6)
- Port Node (2)
- Mileage for circumference of Main Ring
- Mileage for circumference of Subtending Ring

Service availability limited. Refer to # footnote on Page 20-128.

© 2022 Frontier Communications Parent, Inc. All rights reserved.

ACCESS SERVICE

20. **Ethernet Private Line** (Cont'd)

20.2 **Dedicated SONET Ring (DSR)** #(Cont'd)

(B) Service Description (Cont'd)

(4) Subtending Rings (Cont'd)

(l) Lower speed services provided over DSR must ingress at a node on either ring (the main ring or the subtending ring) and egress at a node on either ring (the subtending ring or the main ring). A single port charge applies at the point of ingress and a single port charge applies at the point of egress, unless the ingress and/or egress occurs via an asymmetrical port facility in which case a separate port charge will not apply for each such ingress or egress.

(m) At the customer's option, a lower level service may interconnect the main and one (1) or more of the subtending ring(s) through two (2) separate points of interconnection with each subtending ring. In this case, a single Dual Node Cross-connect Charge applies per lower level service provided across the interconnecting port nodes, regardless of the number of subtending rings involved. The Dual Node Cross-connect Charge does not apply when a lower level service interconnects the main and subtending ring(s) through a single point of interconnection.

(n) In the event that the customer elects to make a subtending ring an independent full DSR, the independent full DSR ring must meet all of the requirements for a DSR full ring as set forth in (B)(1) preceding. This may require an additional node in order to satisfy the minimum node requirement for a single, independent ring.

Service availability limited. Refer to # footnote on Page 20-128.

© 2022 Frontier Communications Parent, Inc. All rights reserved.

ACCESS SERVICE

20. **Ethernet Private Line** (Cont'd)

20.2 **Dedicated SONET Ring (DSR)** #(Cont'd)

(B) Service Description (Cont'd)

(5) The customer must provide, at no cost to the Telephone Company, suitable and secure space, suitable environmental conditions, and uninterrupted power supply, building entrance facilities, and conduit for placement of the facilities and network equipment at its locations as necessary to provide the service.

(6) The customer will be billed additional charges for any charges levied the Telephone Company for space and power required to place ADMs on the Company's side of the network interface.

(7) Connections to Other Services

(a) DSR may connect to Dedicated SONET Optical Transport Service (DSOTS)optical transport channels as set forth in 20.1, preceding. DSOTS combines Dense Wave Division Multiplexing (DWDM) and SONET technologies to create a high-speed backbone network configured in a ring architecture.

(b) Reserved for Future Use

(c) Reserved for Future Use

(d) Ethernet Private Line STS1, OC3, OC3c, OC12, OC12c, and OC48 Ethernet-to-SONET mapped services (as set forth in Section 20.3 following) may be connected to Special Access STS1, OC3, OC3c, OC12, OC12c, and OC48 ports, respectively, via symmetrical or asymmetrical port arrangements.

(1) In a symmetrical port arrangement, one (1) of such ports applies on the higher-speed node at the Telephone Company wire center where the service enters the ring, and a second port of the same capacity applies on the higher-speed node where the service exits the ring. For example, a Ethernet Private Line OC3c Ethernet-to-SONET mapped service would require two (2) OC3c ports in a symmetrical port arrangement (one port to enter the ring and one port to exit the ring).

Service availability limited. Refer to # footnote on Page 20-128.

© 2022 Frontier Communications Parent, Inc. All rights reserved.

ACCESS SERVICE

20. **Ethernet Private Line** (Cont'd)

20.2 **Dedicated SONET Ring (DSR)** #(Cont'd)

(B) Service Description (Cont'd)

(7) Connections to Other Services (Cont'd)

(d) (Cont'd)

(2) In an asymmetrical port arrangement, one of such ports referenced above applies on the higher-speed node at the Telephone Company wire center where the service enters the ring, and the service exits the ring via the OCn port associated with the Asymmetrical Port Facility. More than one such service referenced above may utilize the same Asymmetrical Port Facility and OCn Port of that Asymmetrical Port Facility. For example, three (3) Ethernet Private Line OC12 Ethernet-to-SONET mapped services require 3 OC12 ports (one port for each service) to enter the ring, and all 3 of such services could be provided over an OC48 Asymmetrical Port Facility, and exit the ring via the same OC48 port of that facility. The number of services that can exit the ring via the same port is limited by the STS1 capacity utilized for the connecting service.

(e) Ethernet services are provided on a point-to-point basis (i.e., native Ethernet to native Ethernet) between two suitably equipped DSR enhanced nodes. Additionally, Ethernet Private Line Gigabit Ethernet (transmitted at 50, 150, 300, 450, 600 Mbps or Full Rate) may be connected to a DSR CO Node. Native to native Ethernet services may not be provided over an asymmetrical port facility.

The connection of Ethernet Private Line Gigabit Ethernet to DSR will occur via a DSR GigE-1, 3, 6, 9, 12 or 24 port on the CO Node. When customers who subscribe to Ethernet Private Line under a one-year commitment period connect their Ethernet Private Line Gigabit Ethernet service to DSR, the DSR GigE ports will be billed at month-to-month rates. Ethernet Private Line Gigabit Ethernet is further described in Section 20.3 following.

(f) Reserved for Future Use

(g) Extended Superframe Format (ESF) is preferred on all DS1 circuits in order to ensure performance objectives.

(h) DSR may also be connected to the following Telephone Company provided services, provided that such connections are technically and operationally feasible, as determined by the Telephone Company:

- DWDM ring service
- point-to-point SONET service
- ethernet private line service
- dedicated SONET ring service

Service availability limited. Refer to # footnote on Page 20-128.

© 2022 Frontier Communications Parent, Inc. All rights reserved.

ACCESS SERVICE

20. **Ethernet Private Line** (Cont'd)

20.2 **Dedicated SONET Ring (DSR)** #(Cont'd)

(C) Service Components

The service components of DSR include:

- Nodes and Subtending Nodes
- Port Nodes
- Ports
- High Speed Interfaces (certain partial ring configurations only)
- Mileage between nodes
- Optional Features

(1) Nodes and Subtending Nodes

(a) The customer specifies the ring capacity in terms of optical carrier rates. DSR is available in capacities of OC3, OC12, OC48 and OC192. Lower speed channel services are provided between nodes via port designations.

(b) When two nodes are located in the same building, there will be no diversity between the two nodes.

Service availability limited. Refer to # footnote on Page 20-128.

© 2022 Frontier Communications Parent, Inc. All rights reserved.

ACCESS SERVICE

20. **Ethernet Private Line** (Cont'd)

20.2 **Dedicated SONET Ring (DSR)** #(Cont'd)

(C) Service Components (Cont'd)

(1) Nodes and Subtending Nodes (Cont'd)

(c) Accepted port speeds are as follows:

Enhanced Nodes:	OC3	OC12	OC48	OC192
DS1 Ports	X	X	X	X
DS3 Ports	X	X	X	X
STS1 Ports	X	X	X	X
DS3 Transmux Ports	X	X	X	X
OC3 Ports		X	X	X
OC12 Ports			X	X
OC48 Ports				X
Ethernet Ports				
GigE-1 Ports	X	X	X	X
GigE-3 Ports		X	X	X
GigE-6 Ports		X	X	X
GigE-9 Ports		X	X	X
GigE-12 Ports			X	X
GigE-24 Ports			X	X

(d) Additional nodes could be required to maintain service quality levels. Generally, a transmission of 20 or more miles or a transmission through 6 or more COs will be subject to loss of signal integrity, and would require an additional node. A regeneration node requires a full capacity node, i.e., an OC3 node cannot be used to regenerate transmission on an OC12 ring.

Service availability limited. Refer to # footnote on Page 20-128.

© 2022 Frontier Communications Parent, Inc. All rights reserved.

ACCESS SERVICE

20. **Ethernet Private Line** (Cont'd)

20.2 **Dedicated SONET Ring (DSR)** #(Cont'd)

(C) Service Components (Cont'd)

(1) Nodes and Subtending Nodes (Cont'd)

(e) The customer may provide a single node and associated port equipment at one of its premises subject to compatibility with the Company's equipment in the COs. This compatibility requires that the customer, at its own expense, uses matching vendor's equipment and maintains the same vintage in software release as the Company. Upon written notification from the Company, the customer has 60 days in which to complete the change out of software. In addition, the customer must configure the node to limit access to the data communications channel of the node.

(f) The Company can not ensure the performance monitoring of the ring when it is equipped with customer provided nodes.

(g) Subtending Nodes

(1) A subtending node is an enhanced node that subtends another enhanced node of a higher speed (e.g., an OC12 enhanced node may subtend an OC192 enhanced node).

(2) More than one (1) lower speed enhanced node may subtend the same higher speed enhanced node.

(3) The connection between the higher and lower speed enhanced nodes is a SONET facility (Subtending Node Facility) between an OCn port on the higher speed node and the lower speed node which must be of the same optical carrier rate as the OCn port on the higher speed node.

(4) When the higher speed enhanced node is located at a customer designated premises, the subtending node(s) must be located at the same customer designated premises.

(5) When the higher speed enhanced node is located at a Telephone Company wire center, the subtending node(s) may be located within that same wire center or extended to a customer designated premises that is served by that wire center or by a different wire center. When extending the subtending node to a customer designated premises, the subtending node facility is subject to a channel extension charge. When the customer designated premises is not served by the same wire center as the higher speed enhanced node, mileage applies between the wire centers involved. Mileage applies in addition to the channel extension charge.

Service availability limited. Refer to # footnote on Page 20-128.

© 2022 Frontier Communications Parent, Inc. All rights reserved.

ACCESS SERVICE

20. **Ethernet Private Line** (Cont'd)

20.2 **Dedicated SONET Ring (DSR)** #(Cont'd)

(C) Service Components (Cont'd)

(1) Nodes and Subtending Nodes (Cont'd)

(h) When a customer premises node is located in the same building as a CO node, there will be no diversity between the two nodes.

(i) When DSR is ordered under a meet point billing arrangement in which the Telephone Company acts as an intermediate carrier as set forth in Section 2.7.3 preceding, at least one node of the DSR ring must be in a Company CO.

(2) Ports

(a) Ports may be ordered in a symmetrical arrangement (e.g., DS3 Port to DS3 Port), an asymmetrical arrangement (e.g., OC12 Port to DS3 Port) as set forth in (C)(2)(c) following, or in certain transmuxing arrangements as set forth in (C)(2)(d) following. Ports are not provided at mutually agreed upon locations where a high speed (pass-through) interface is utilized.

(b) (Reserved for Future Use)

Service availability limited. Refer to # footnote on Page 20-128.

© 2022 Frontier Communications Parent, Inc. All rights reserved.

ACCESS SERVICE

20. **Ethernet Private Line** (Cont'd)

20.2 **Dedicated SONET Ring (DSR)** #(Cont'd)

(C) Service Components (Cont'd)

(2) Ports (Cont'd)

(c) Asymmetrical Ports

(1) Asymmetrical ports allow lower level services to be added to, and dropped from, DSR using ports with different transmission rates. For example, a DS1 channel can be added to the ring via a DS3 port and dropped from the ring via a DS1 port. These lower level services may originate and/or terminate at locations that are on or off of the DSR.

(2) For OCn ports, the port with the higher transmission rate uses a facility (Asymmetrical Port Facility or (APF), which is also referred to as a Stub Hub), which is channelized to individual services requiring lower capacity facilities and lower capacity ports. Only one (1) such higher transmission rate OCn port applies per asymmetrical port facility. The number of lower capacity services that can utilize the same APF is limited by the total STS1 capacity of the connecting services. Available transmission rates for the APF are dependent on the capacity of the port to which it is connected. For example, an OC12 APF cannot be established on an OC3 Port. Additionally, the capacity of the port is dependent on the capacity of the node involved.

(3) The APF provides a two-point channelized facility between a customer designated premises or an Expanded Interconnection arrangement and the OCn higher transmission rate port of the asymmetrical port combination. Such port may be associated with a node that is located at either the customer designated premises or within a Telephone Company wire center.

(a) When the APF is located at the customer's designated premises, the APF is provided between the customer's designated premises and the port on the associated node located at that same premises. Rates and charges for the port apply as set forth in (D) following.

(b) When the APF is located in a Telephone Company wire center and the APF connects to a customer designated premises that is served by the same wire center, an asymmetrical port channel extension applies to extend the APF to the customer designated premises. Rates and charges for the asymmetrical port channel extension apply in addition to the rates and charges for the port as set forth in (D) following.

Service availability limited. Refer to # footnote on Page 20-128.

© 2022 Frontier Communications Parent, Inc. All rights reserved.

ACCESS SERVICE

20. **Ethernet Private Line** (Cont'd)

20.2 **Dedicated SONET Ring (DSR)** #(Cont'd)

(C) Service Components (Cont'd)

(2) Ports (Cont'd)

(d) Transmux Ports (Cont'd)

(2) DS3 Transmux Ports utilize a DS3 Transmux Facility to which VT1.5 mapped DSR DS1 ports are associated. Such facility will be provisioned upon ordering the associated DS3 Transmux port.

(3) When transmuxing arrangements are ordered in symmetrical or asymmetrical port combinations, the following conditions apply:

- A DS1 port associated with a DS3 Transmux port and facility may not coexist as a separate DS1 port within the same DSR node.
- An end-to-end DS1 service provided over DSR may not be associated with more than one DS3 Transmux port or DS3 Transmux facility.
- DS3 Transmux ports are available at a premises node or at a wire center node.
- When a DS3 Transmux port is utilized on an enhanced node located in a Telephone Company wire center, such port must be connected to DS3 High Capacity Service as set forth in Section 6 and Section 7 preceding.
- The higher speed port of an asymmetrical port combination will be mapped based on the speed of the connecting service and port.

(e) The maximum number of ports that are supported on a node may be limited by the number and type of ports that are provided on that node. Upon installation of a new ring, the Customer must provide the Telephone Company with an initial port requirement and a forecast of future port requirements on each node which the Telephone Company will utilize when engineering the port configuration for that node.

(f) Engineering requirements must be taken into consideration when planning port configurations on enhanced nodes. Each NG-ADM platform has different port capacities. Upon installation of the ring, the customer shall provide initial port requirements and forecasts for each node to allow to design the network most efficiently.

OC12 and OC48c ports may also be utilized with service connecting to certain advanced data services.

(g)

Service availability limited. Refer to # footnote on Page 20-128.

© 2022 Frontier Communications Parent, Inc. All rights reserved.

ACCESS SERVICE

20. **Ethernet Private Line** (Cont'd)

20.2 **Dedicated SONET Ring (DSR)** #(Cont'd)

(C) Service Components (Cont'd)

(3) High Speed (Pass-Through) Interfaces

A high-speed (pass-through) interface is a device placed at a mutually agreed upon fiber-meet location where interconnection between the facilities of the Telephone Company and those of the customer or of a third party provider occurs. The high-speed (pass-through) interface will not be utilized when such interconnection occurs within a Telephone Company CO (for which a node and fiber cross-connects apply) or at a customer's designated premises for which interconnection via a node occurs. Connection to other Telephone Company services is prohibited at locations utilizing a high-speed (pass-through) interface.

(4) Mileage

(a) DSR Mileage is the total of airline distances between enhanced nodes rounded up to the nearest mile. The mileage rate is based on total ring capacity and not on individual services between nodes.

(b) DSR Mileage on a Partial ring is the total of airline distances between devices nodes and the designated fiber meet locations (customer designated premises, wire center or mutually agreed upon pass-through location, as applicable) on the partial ring. The total mileage is then rounded up to the nearest mile.

(c) The mileage charge for a four-node OC3 ring with 5.1 miles between each node (20.4 total miles) would be calculated by multiplying the OC3 mileage rate in 20.2(K)(3) by 21 miles. This mileage calculation applies regardless of the number of services (e.g., DS3s) on the ring.

(d) Connection of DSR to an DSOTS ring is provided over an equal speed, unprotected optical transport channel (e.g. a 155.52 Mbps unprotected channel would connect to an OC3 DSR node). When DSR is provided entirely or in part over an DSOTS backbone network, connection between the DSR nodes is provided using DSOTS unprotected optical transport channels in lieu of DSR channel mileage between the nodes. Each node on the DSR ring must be located at the same customer designated premises or in the same Telephone Company wire center as its corresponding DSOTS node.

(e) When DSR is provided entirely or in part over a Telephone Company provided DWDM ring service backbone network, no DSR channel mileage will apply between the nodes.

(5) Optional Features

Optional features are described in (J) following.

(6) Port Nodes

A port node allows interconnection between two (2) full DSR rings. One (1) of the rings will be designated as the main ring and the other ring is designated as a subtending ring. Subtending rings are described in (B)(4) preceding.

Service availability limited. Refer to # footnote on Page 20-128.

© 2022 Frontier Communications Parent, Inc. All rights reserved.

ACCESS SERVICE

20. **Ethernet Private Line** (Cont'd)

20.2 **Dedicated SONET Ring (DSR)** #(Cont'd)

(D) Application of Rates and Charges

(1) All monthly recurring rate elements for DSRs are available for 3, 5 and 7-year commitment periods. DSR ports and asymmetrical port facilities are also available on monthly terms. Nodes, optional features, subtending node facilities, asymmetrical port facilities, and ports added subsequent to the initial installation may be coterminous to the expiration date of the DSR provided the addition is prior to the 21st month for a 3-year plan, prior to the 36th month for a 5-year plan, or prior to the 50th month for a 7-year plan. Nodes, optional features, subtending node facilities, and asymmetrical port facilities added after the aforementioned periods require extending the commitment period for an additional one year for a 3-year plan, an additional 2 years for a 5-year plan, or an additional 3 years for a 7-year plan. However, ports and asymmetrical port facilities in a Month-to-Month plan may be added at any time.

(2) Once a term period expires, the prevailing monthly rates of the current plan will continue until the customer cancels service or requests a new term plan.

(3) Nonrecurring Charges

(a) First and Additional Nonrecurring Charges for Ports

(1) The First Nonrecurring Charge applies to the first of each port type and speed installed at a node. The Additional Nonrecurring Charge applies for each additional port of the same type and same speed added at the same node on the same order. For example, if a customer places an order for ten (10) GigE3 Ports at the same OC48 node, one First Nonrecurring Charge and nine Additional Nonrecurring Charges will apply for the GigE3 Ports. The charge will vary based on whether the installation is in connection with the initial installation of the DSR service or a subsequent installation of ports.

(2) Changes in Month-to-Month billed ports or asymmetrical port facilities are treated as disconnects and subsequent installations for which subsequent nonrecurring charges apply.

(b) Nonrecurring charges for DSR nodes apply to all nodes installed subsequent to the initial installation of DSR.

(c) A Channel Mapping nonrecurring charge as set forth in (K)(b) following applies for each channel which the Telephone Company must map over the partial ring. Channel mapping is only required on channels that originate at and terminate to devices that are not within the partial ring.

Service availability limited. Refer to # footnote on Page 20-128.

© 2022 Frontier Communications Parent, Inc. All rights reserved.

ACCESS SERVICE

20. **Ethernet Private Line** (Cont'd)

20.2 **Dedicated SONET Ring (DSR)** #(Cont'd)

(D) Application of Rates and Charges (Cont'd)

(3) Nonrecurring Charges (Cont'd)

(d) When a lower capacity service is dropped from a DSR, the associated ports will be billed to the lower capacity service. Lower capacity services may not be dropped at locations utilizing a pass-through interface. However, a Channel Mapping charge will apply for each lower capacity service that originates at and terminates to devices that are not within the partial ring provided by the Telephone Company. The Channel Mapping Charge is billed to the lower capacity service.

(e) When a lower capacity service is provided between two (2) separate asymmetric port facilities (APF) on the same DSR, the Telephone Company must map the facility assignment on the first APF to the facility assignment on the second APF for which an Asymmetrical Port Mapping Nonrecurring Charge applies per lower capacity service mapped.

(f) Nonrecurring charges apply for the installation of an Optional Feature as described in (J)(1) and (J)(2) following.

(g) A single Dual Node Cross-connect Charge applies per lower level service provided across the interconnecting port nodes of a subtending ring(s) configuration, regardless of the number of subtending rings involved. Dual Node Cross-connect Charges as set forth in (K)(11) following apply for each channel which the Telephone Company must cross-connect between the port nodes of the interconnecting ring(s).

(4) When a node is disconnected prior to the end of the commitment period, the node is subject to termination liability under (E)(1) following.

(5) Reserved

(6) Where an Ethernet, Fibre Channel, or FICON signal is mapped to a SONET service, and that SONET service is provided in a symmetrical port arrangement, two (2) OCn ports apply (one where the mapped signal enters the ring and one where the mapped signal exits the ring).

(7) Where one or more Ethernet, Fibre Channel or FICON signals are mapped to a SONET service, and that SONET service utilizes an asymmetrical port combination (e.g., the signals enter the ring mapped to an OC12 SONET service and exit the ring via an OC48 port associated with an asymmetrical port facility), only one OCn port applies per mapped signal to enter the ring and the signal exits the ring over the asymmetrical port facility. The total number of such mapped Ethernet, Fibre Channel, or FICON signals that can be associated with the OCn Port of the asymmetrical port facility is limited by the STS1 capacity required to map each signal into the SONET service. For example, assume that an OC48 APF is ordered for which an OC48 port, OC48 mileage, and, when applicable, an OC48 Extension applies (an OC48 has a capacity of 48 STS1s). Further assume that 2 Ethernet Private Line 600 Mbps Ethernet-to-SONET mapped services are ordered, each of which requires 6 STS1s when mapped into an OC12 SONET signal. In this example, the OC48 asymmetrical port arrangement would still have 36 available STS1s.

Changes in Month-to-Month billed asymmetrical port facilities are treated as disconnects and subsequent installations.

(8) # Service availability limited. Refer to # footnote on Page 20-128.

© 2022 Frontier Communications Parent, Inc. All rights reserved.

20. **Ethernet Private Line** (Cont'd)

20.2 **Dedicated SONET Ring (DSR)** #(Cont'd)

(E) Termination Liability

(1) Unless otherwise set forth in this section, termination liability applies when DSR service or a Customer Network Management Optional Feature is terminated prior to the end of the applicable commitment term. Termination liability is charged per monthly rate element on all nodes, high speed (pass-through) interfaces, port nodes, optional features, subtending node facilities, asymmetrical port facilities, and ports (other than Month-to-Month billed ports for which the one month minimum service charges applies).

(2) A separate termination liability charge is assessed for each rate element associated with the disconnected DSR service or a Customer Network Management Optional Feature.

(3) Reserved for Future Use (C)

(4) Termination liability will not apply on any DSR service or Customer Network Management Optional Feature if a customer changes to a longer term commitment period for such service.

Service availability limited. Refer to # footnote on Page 20-128.

© 2024 Frontier Communications Parent, Inc. All rights reserved.

ACCESS SERVICE

20. **Ethernet Private Line** (Cont'd)

20.2 **Dedicated SONET Ring (DSR)** #(Cont'd)

(E) Termination Liability (Cont'd)

(5) Termination liability will not apply to a customer upgrade (change to a higher capacity DSR service), if all of the following conditions are met. These conditions do not apply to Optional Features.

(a) A new commitment period commenced with the upgrade.
(b) The new expiration date extends beyond the discontinued plan date.
(c) The upgrade consists of one (1) existing DSR service being upgraded into a higher capacity DSR service or two (2) existing DSR services being upgraded into a single, higher capacity DSR service.
(d) The new DSR service has at least one customer premises Node and one CO Node in common with the discontinued service(s).
(e) When two (2) existing DSR services are being upgraded into a single, higher capacity DSR service, the aggregate amount of all monthly charges for the nodes and ports included under the new commitment period is at least 25% greater than the aggregate amount of the monthly charges remaining in the commitment period for the nodes and ports being disconnected.

For illustrative purposes, assume the following:

- Customer has 2 separate OC3 DSR services
- One OC3 DSR is in its twenty-fourth (24th) month of a 3-year term plan (i.e., 12 months remain in the term commitment period) and is configured with 3 nodes and 6 ports (Ring A)
- The other OC3 DSR is in its twenty-first (21st) month of a 3-year term plan (i.e., 15 months remain in the term commitment period) and is configured with 3 nodes and 6 ports (Ring B)
- The customer is upgrading Rings A & B to a single OC12 DSR with a term plan of 3 years that is to be configured with 3 nodes and 6 ports (Ring C)

Based on the above assumptions, the following calculations are used to determine if the aggregate amount of monthly charges for the commitment period of Ring C is greater than the combined aggregate amount of monthly charges for the remainder of the commitment periods on Rings A & B and therefore, whether or not termination liability will apply to Rings A & B for the upgrade.

Service availability limited. Refer to # footnote on Page 20-128.

© 2022 Frontier Communications Parent, Inc. All rights reserved.

ACCESS SERVICE

20. **Ethernet Private Line** (Cont'd)

20.2 **Dedicated SONET Ring (DSR)** #(Cont'd)

(E) Termination Liability (Cont'd)

(5) (Cont'd)

Step 1 – Determine the amount of monthly charges remaining on Ring A for the balance of the term commitment by multiplying the monthly rates for the 3 nodes and 6 ports (assume $4680 per month) by the 12 months remaining in the term commitment = $56,160.

Step 2 - Determine the amount of monthly charges remaining on Ring B for the balance of the term commitment by multiplying the monthly rates for the 3 nodes and 6 ports (assume $4680 per month) by the 15 months remaining in the term commitment = $70,200.

Step 3 – Determine the combined aggregate amount of monthly charges remaining for Rings A & B by summing the amounts determined in Steps 1 and 2 ($56,160 + $70,200 = $126,360).

Step 4 – Determine the aggregate amount of monthly charges associated with Ring C by multiplying the monthly rates (assume $9390) by 36 months for the term commitment = $338,040.

Step 5 – Determine the difference between the monthly charges for the existing service and the monthly charges for the upgraded service by subtracting the combined aggregate amount determined in Step 3 from the aggregate amount determined in Step 4 ($338,040 - $126,360 = $211,680).

Step 6 - Divide the result obtained in Step 5 by the aggregate amount determined in Step 3 ($211,680/$126,360 = 1.675). Convert the decimal amount to a percentage by multiplying by 100 (1.675 x 100 = 167.5%).

If the result is equal to or greater than 25%, then the upgrade occurs without the application of termination liability on Rings A & B. If the result is less than 25%, termination liability applies to Rings A & B in accordance with this Section 20.2(E). Standard rounding rules apply. For this example, the result is 167.5%; therefore, termination liability does not apply.

Additional nodes and ports added at the time of the upgrade incur all applicable rates.

Service availability limited. Refer to # footnote on Page 20-128.

© 2022 Frontier Communications Parent, Inc. All rights reserved.

ACCESS SERVICE

20. **Ethernet Private Line** (Cont'd)

20.2 **Dedicated SONET Ring (DSR)** #(Cont'd)

(E) Termination Liability (Cont'd)

(5) (Cont'd)

(f) Termination liability will apply when none of the conditions above are met and the customer cancels service prior to expiration of the plan period. If the cancellation occurs within the first two years of a term plan, termination liability is equal to 100 percent of the monthly charges for the unexpired portion of the first two years, and 25 percent of the monthly charges for the remainder of the plan. If the customer cancels after the first two years of service, then termination liability is equal to 25 percent of the monthly charges for the remaining life of the term.

(g) For Dedicated SONET Ring (DSR) with a commitment period which was extended under (I) following, termination liability is calculated as the difference between the monthly rates for the highest Term Pricing Plan commitment period that could have been satisfied prior to disconnection of the service or cancellation of the plan and the monthly rates already paid for the expired commitment period and the extended commitment period for the period of time the service was in effect.

Service availability limited. Refer to # footnote on Page 20-128.

© 2022 Frontier Communications Parent, Inc. All rights reserved.

ACCESS SERVICE

20. **Ethernet Private Line** (Cont'd)

20.2 **Dedicated SONET Ring (DSR)** #(Cont'd)

(F) Conversions

Customers who wish to move or convert existing High Capacity Special Access Services to DSR may do so without conversion charges (termination liability and installation charges) as long as the total capacity of Special Access services purchased by the customer does not change.

Customers who wish to move or convert existing Custom Connect to a DSR may do so without Custom Connect initial termination liability charges as set forth in 20(G)(5) preceding or DSR installation charges as long as the total capacity of Special Access services purchased by the customer does not decrease. The customer also has the option to select a Term Pricing Plan (TPP) for their DSR that is longer than the TPP on Custom Connect.

When the following conditions are met, a customer who converts a Custom Connect Ring to DSR is also eligible to receive credit towards the commitment period of the replacing DSR TPP for the actual time that the Custom Connect Ring was in effect under its current TPP (i.e., time-in-service credit). Time-in-service associated with prior TPPs for Custom Connect are not eligible for time-in-service credit. Time-in-service credit is further described in (I) following. Such credit is not allowed unless the conditions set forth in (1) through (5) following are met.

(1) All rate elements associated with the Custom Connect Ring must have been in service under its TPP for at least 10 months.

(2) The commitment period selected for the DSR TPP must be longer than the commitment period of the TPP for the Custom Connect Ring being converted as follows:

(a) Custom Connect Ring under a 1 year TPP may be converted to DSR under a 3, 5 or 7 year Term Plan.

(b) Custom Connect Ring under a 3 year TPP may be converted to DSR under a 5 or 7 year TPP.

(c) Custom Connect Ring under a 5 year TPP may be converted to DSR under a 7 year TPP.

(3) The Custom Connect Ring being converted to DSR must utilize enhanced nodes. Enhanced nodes are OCn nodes that meet the technical requirements to provide DSR. These nodes are technically capable of providing DS1 and DS3 drops directly from an OCn node terminal as delineated in this Section 20.2 and in Section 20(D)(1)(j) preceding.

(4) The enhanced nodes utilized on the Custom Connect Ring must be capable of being upgraded to the OCn enhanced nodes required for DSR. The technical ability to upgrade such nodes will be determined by the Telephone Company during the planning session with the customer.

(5) The customer acknowledges that portions of the ring will experience a service outage during those times when the nodes are being upgraded. Service outages that occur during such periods of upgrade are not subject to credit for a service interruption as set forth in Section 2.7.1.1 preceding.

Service availability limited. Refer to # footnote on Page 20-128.

© 2022 Frontier Communications Parent, Inc. All rights reserved.

ACCESS SERVICE

20. **Ethernet Private Line** (Cont'd)

20.2 **Dedicated SONET Ring (DSR)** #(Cont'd)

(G) Deployment and Availability

Since DSR service provides a dedicated high capacity customized network, it is deployed upon customer request. Where suitable facilities are not available to provide DSR, the Telephone Company will construct facilities for DSR in the same manner in which it constructs facilities for DSOTS under Section 20.1(G) preceding.

DSR is available based on negotiated intervals as described in 5.1.7, preceding.

(H) Shared Use

Shared use is permitted whenever Special Access and Switched Access are provided over the same DSR. At least one channel of a service (e.g., DS1 or DS3) on the ring must be Special Access for the service to be billed as Special Access.

The node, mileage and port rate elements are reduced (ratcheted) to offset the Switched Access charges for the entrance facility, and mileage. Two separate reduction ratios are used. The reduction ratio for the node and mileage charges is calculated by dividing the number of switched DS0 equivalents in use on the DSR by the total DS0 equivalent quantities for the ring; see the table below.

Ring Type	DS3 Quantities	DS1 Quantities	DS0 Quantities
OC3	3	84	2,016
OC12	12	336	8,064
OC48	48	1,344	32,256
OC192	192	5,370	129,024

The reduction ratio for the port charge is calculated by dividing the number of switched DS0 equivalents in use on the channelized services on the DSR (the lower speed services on the ring) by the total number of DS0 equivalents that are in use on the channelized services on the DSR.

If the DSR is used to route Switched Access traffic between Telephone Company Wire Centers, then Switched Access Direct Trunk Transport rates are also applied.

Service availability limited. Refer to # footnote on Page 20-128.

© 2022 Frontier Communications Parent, Inc. All rights reserved.

ACCESS SERVICE

20. **Ethernet Private Line** (Cont'd)

20.2 **Dedicated SONET Ring (DSR)** #(Cont'd)

(I) Extension of a Commitment Period

(1) For Dedicated SONET Ring (DSR), the customer also has the option, within sixty (60) days prior to the expiration date for its commitment period, to extend its expiring Term Pricing Plan to a plan with a longer commitment period, for which time-in-service credit will be allowed for the expiring plan. The commitment period selected for the extended plan must be longer than the commitment period of the expiring plan as follows:

- An expiring 3-Year Term may be extended to either a 5-Year or 7-Year Term Plan.
- An expiring 5-Year Term may be extended to a 7-Year Term Plan.

(2) Time-in-service credit on the expiring plan will be granted and applied towards the new extended plan. For example, an expiring 3-Year term plan will allow for 3 years of time-in-service credit towards the extended plan.

(3) The discount percentage associated with the extended plan will apply effective with the first bill day following expiration of the commitment period for the existing plan and continue through the remainder of the commitment period associated with the extended plan. No adjustment for the increased discount percentage associated with the extended plan will be made to the monthly rates already billed on the expiring plan.

Service availability limited. Refer to # footnote on Page 20-128.

© 2022 Frontier Communications Parent, Inc. All rights reserved.

ACCESS SERVICE

20. **Ethernet Private Line** (Cont'd)

20.2 **Dedicated SONET Ring (DSR)** #(Cont'd)

(J) Optional Features

The customer has the option of purchasing a Customer Network Management Optional Feature for use with a DSR service provided by the Telephone Company in accordance with this Section 20.2. In order to purchase an Optional Feature, the customer must be subscribed to a DSR service and must use such DSR service in conjunction with the selected Optional Feature.

(1) Customer Service Management Optional Feature

(a) Description

Customer Service Management Optional Feature (CSM) provides a customer with real-time information about the operational status of its DSR network and the ability to reconfigure lower level services riding the DSR ring. Three (3) Service Levels of support are offered for CSM. Each Service Level provides different functionalities to which the customer may gain access. These functionalities are described following and include access to real-time information about the customer's DSR network, the ability to generate reports, and the ability to reconfigure lower level services riding the DSR ring. When ordering CSM, the customer must specify the level of CSM support as one of the following three (3) Service Levels.

(1) Level 1 support provides a network view of real-time detection and reporting of network alarm conditions within the customer's DSR network.

(2) Level 2 support provides the same support described in Level 1 along with the ability for the customer to generate basic network performance reports for its DSR network. In accordance with (J)(1)(c)(5), the customer may also request network performance reports that are customized to meet their specific needs.

(3) Level 3 support provides the same support described in Levels 1 and 2 along with the ability to reconfigure (re-map) the end points of lower level services riding the ring.

(a) Reconfiguration using CSM consists of re-mapping the end point of a primary circuit to its preplanned (backup) port location. The customer must specify a preplanned port location for each primary circuit installed. The preplanned port location is a backup location that is activated and de-activated when a primary circuit is reconfigured at the request of the customer via the CSM platform. A reconfiguration is limited to the mapping of one primary circuit to its assigned preplanned location. For each preplanned port location, a monthly recurring rate and a nonrecurring installation charge apply per port in accordance with (J)(1)(b) following. When the primary circuit and preplanned port are billed to a customer other than the DSR customer (Service User), the Service User must provide a Letter of Authorization (LOA) signed by both the Service User and the DSR customer (Host Customer). The LOA must include an acknowledgment that the Host Customer has the ability to perform CSM functions (e.g., reconfiguration) on the portion of the Service User's service that rides the DSR.

Service availability limited. Refer to # footnote on Page 20-128.

© 2022 Frontier Communications Parent, Inc. All rights reserved.

ACCESS SERVICE

20. **Ethernet Private Line** (Cont'd)

20.2 **Dedicated SONET Ring (DSR)** #(Cont'd)

(J) Optional Features (Cont'd)

(1) Customer Service Management Optional Feature (Cont'd)

(a) Description (Cont'd)

(3) (Cont'd)

(b) A Telephone Company Performed Reconfiguration charge, as described in (J)(1)(b)(2)(g) following, will apply when the customer requests that the Telephone Company perform a reconfiguration of service on its behalf. This charge does not apply when a customer performs its own service reconfiguration.

(c) Reconfiguration is not permitted on services arranged in the following service configurations:

Switched Access Service;
service provided under a shared use arrangement;
service associated with Centrex-CO or Primary Rate ISDN service; or
primary circuits for which the customer has not specified a preplanned backup location.

(d) The type of nodes deployed within the DSR network may limit reconfiguration of OC12/OC12c circuits within an OC48 DSR. CSM is not available on partial ring configurations.

(e) When CSM is added to an existing ring, existing circuits that are being made reconfigurable will require that an Access Order be issued to designate the circuit as reconfigurable. Nonrecurring charges as set forth in Section 5 preceding may apply. The Telephone Company's ability to provide CSM on a particular ring may be limited by the overall configuration of that ring. Reconfiguration is limited to those circuits that originate and/or terminate on the ring (i.e., at locations served by a node on the ring) and utilize ports that are symmetrical. For circuits that originate or terminate off the ring (i.e., at locations not served by a node on the ring), the reconfiguration is limited to customer premises node locations on the ring.

(b) Rate Regulations

CSM rates and charges are set forth in (K)(7)(a) following, unless noted otherwise. CSM rates and charges apply in addition to any applicable DSR rates and charges as described in (K) following. Unless otherwise indicated below, CSM rates and charges apply regardless of the Service Level selected by the customer.

(1) Monthly Recurring Rate

(a) A CSM Service Level rate applies for each DSR ring provided with CSM.

(b) For customers subscribing to Service Level 3 support, a Preplanned Port rate, as set forth in (K)(7)(a)(2) following, applies for each preplanned port location established.

Service availability limited. Refer to # footnote on Page 20-128.

© 2022 Frontier Communications Parent, Inc. All rights reserved.

ACCESS SERVICE

20. **Ethernet Private Line** (Cont'd)

20.2 **Dedicated SONET Ring (DSR)** #(Cont'd)

(J) Optional Features (Cont'd)

(1) Customer Service Management Optional Feature (Cont'd)

(b) Rate Regulations (Cont'd)

(2) Nonrecurring Charge

(a) A Node Setup charge applies for each node that is equipped with CSM at the time that CSM is initially established on the ring.

(b) An Add/Remove Node charge applies for each node that is subsequently added to, or removed from, a ring that has already been equipped to provide CSM.

(c) An Initial CSM Setup charge applies for establishment of the customer's initial CSM database partition. The initial CSM database partition includes setup for up to six (6) users.

(d) A Setup of Additional Users charge applies for the setup of up to six (6) additional users beyond those provided with the initial database setup when CSM is initially established on the ring.

(e) A Setup of Additional Partition or Change in CSM Service Level charge applies for the setup of an additional CSM database partition created for the same customer or to change from one CSM service level to another (e.g., change Service Level 2 to Service Level 3). Each additional CSM database provides for the setup of up to six (6) additional users.

Service availability limited. Refer to # footnote on Page 20-128.

© 2022 Frontier Communications Parent, Inc. All rights reserved.

ACCESS SERVICE

20. **Ethernet Private Line** (Cont'd)

20.2 **Dedicated SONET Ring (DSR)** #(Cont'd)

(J) Optional Features (Cont'd)

(1) Customer Service Management Optional Feature (Cont'd)

(b) Rate Regulations (Cont'd)

(2) Nonrecurring Charges (Cont'd)

(f) A Consultation and Support charge applies for each thirty (30) minutes or fraction thereof that the customer requests Telephone Company consultation and support of its CSM network. This charge does not apply during initial setup of CSM on the ring.

(g) A Telephone Company Performed Reconfiguration charge applies for Service Level 3 customers only when the customer requests that the Telephone Company perform a reconfiguration based on its pre-mapping instructions.

(h) A Preplanned Port charge in (K)(7)(a)(2) following, applies for Service Level 3 customers only for each port associated with a preplanned location that is established during the initial establishment of CSM on the ring.

(c) Terms and Conditions

(1) The customer must utilize Internet web access to connect its customer-provided terminal equipment to the Telephone Company's CSM management system. Access to the Internet and any associated rates and charges are the responsibility of the customer. The customer is also responsible for obtaining communications software that is compatible with the software the Telephone Company utilizes to provide CSM. The Telephone Company will work cooperatively with the customer to determine compatibility of its communications software.

(2) CSM is provided only when the Telephone Company provides all nodes on the ring.

(3) Subject to the restrictions set forth in (J)(1)(c)(4) following, CSM is provided coincident with the installation of the associated DSR ring or may be added to an existing ring. The customer will be responsible for the rates and charges set forth in (J)(1)(b) preceding (Rate Regulations).

(4) CSM Service Level is provided under a term plan of 3 years, 5 years, or 7 years, as described following.

(1) The duration of the term plan for CSM Service Level must be the same duration as the term plan for the DSR nodes provided with CSM. The customer has the option of subscribing to Preplanned Ports on a month-to-month basis or under a term plan of 3, 5, or 7 years. At the expiration of its 3, 5, or 7 year term plans for CSM Service Levels or Preplanned Ports, the customer has the option of extending CSM Service Level or Preplanned Ports with a coterminous end date as described in (J)(1)(c)(4)(b) following.

(2) The expiration date of each CSM Service Level added subsequent to the initial installation must be coterminous to the expiration date of the associated DSR service, provided that the addition is prior to the 21st month for a 3-year plan, prior to the 36th month for a 5-year plan, or prior to the 50th month for a 7-year plan. A CSM added after the aforementioned periods requires extension of the commitment period for the associated DSR service in accordance with this Section 20.2. Such extension results in the establishment of a new plan that includes both the DSR and the CSM under the same plan with the same expiration date.
Service availability limited. Refer to # footnote on Page 20-128.

© 2022 Frontier Communications Parent, Inc. All rights reserved.

ACCESS SERVICE

20. **Ethernet Private Line** (Cont'd)

20.2 **Dedicated SONET Ring (DSR)** #(Cont'd)

(J) Optional Features (Cont'd)

(1) Customer Service Management Optional Feature (Cont'd)

(c) Terms and Conditions (Cont'd)

(5) With Service Level 2 or 3 support, the customer may retrieve certain basic reports containing performance-monitoring information on its DSR network, as designated and provided by the Telephone Company. Basic reports are available at no additional charge to the customer. The customer may also request that a report be customized to meet its particular needs. Rates and charges for customized reports are provided on an individual case basis (**ICB**) only. Reports are not provided with Level 1 support.

(6) CSM is subject to termination liability if CSM is removed prior to completion of the existing commitment period. The terms and conditions in (E) preceding, as applicable, apply to removal of CSM prior to completion of the existing commitment period.

(7) When the primary circuit and preplanned port are billed to a customer other than the DSR customer (Service User), the Service User must provide a Letter of Authorization (LOA) signed by both the Service User and the DSR customer (Host Customer). The LOA must include an acknowledgment that the Host Customer has the ability to perform CSM functions (e.g., reconfiguration) on the portion of the Service User's service that rides the DSR.

Service availability limited. Refer to # footnote on Page 20-128.

© 2022 Frontier Communications Parent, Inc. All rights reserved.

ACCESS SERVICE

20. **Ethernet Private Line** (Cont'd)

20.2 **Dedicated SONET Ring (DSR)** #(Cont'd)

(K) Rates & Charges

(1) Enhanced Node Monthly Rates, per Node
(Jurisdiction: All Jurisdictions)

Enhanced Node Type	3-Year Term	5-Year Term	7-Year Term
OC3	$1,330.00	$1,290.00	$1,186.00
OC12	$2,900.00	$2,700.00	$2,430.00
OC48	$4,800.00	$4,604.00	$4,143.00
OC192	$10,000.00	$9,200.00	$8,280.00

Enhanced Node Subsequent Installation , per node (any capacity)*

	Nonrecurring Rates
:	$1,599.00

(2)

Service availability limited. Refer to # footnote on Page 20-128.

© 2022 Frontier Communications Parent, Inc. All rights reserved.

ACCESS SERVICE

20. **Ethernet Private Line** (Cont'd)

20.2 **Dedicated SONET Ring (DSR) #**(Cont'd)

(K) Rates & Charges (Cont'd)

(2) Mileage - Monthly Rates, per mile between nodes
(Jurisdiction: All Jurisdictions)

Ring Type	3-Year Term	5-Year Term	7-Year Term
OC3	$325.00	$300.00	$275.00
OC12	$335.00	$320.00	$300.00
OC48	$450.00	$420.00	$400.00
OC192	$1,390.00	$1,279.00	$1,215.00

Service availability limited. Refer to # footnote on Page 20-128.

© 2022 Frontier Communications Parent, Inc. All rights reserved.

ACCESS SERVICE

20. **Ethernet Private Line** (Cont'd)

20.2 **Dedicated SONET Ring (DSR)** #(Cont'd)

(K) Rates & Charges (Cont'd)

(3) Ports – Monthly Rates per Enhanced Node
(Jurisdiction: All Jurisdictions)

Port Type	3-Year Term	5-Year Term	7-Year Term
DS1at OC3 Node	$28.00	$28.00	$28.00
DS1at OC12 Node	$28.00	$28.00	$28.00
DS1at OC48 Node	$28.00	$28.00	$28.00
DS1at OC192 Node	$28.00	$28.00	$28.00
DS3 or STS1 at OC3 Node	$115.00	$115.00	$115.00
DS3 or STS1 at OC12 Node	$115.00	$115.00	$115.00
DS3 or STS1 at OC48 Node	$115.00	$115.00	$115.00
DS3 or STS1 at OC192 Node	$115.00	$115.00	$115.00
DS3 Transmux at OC3 Node*	$400.00	$400.00	$400.00
DS3 Transmux at OC12 Node	$400.00	$400.00	$400.00
DS3 Transmux at OC48 Node	$400.00	$400.00	$400.00
DS3 Transmux at OC192 Node	$400.00	$400.00	$400.00

Service availability limited. Refer to # footnote on Page 20-128.

© 2022 Frontier Communications Parent, Inc. All rights reserved.

ACCESS SERVICE

20. **Ethernet Private Line** (Cont'd)

20.2 **Dedicated SONET Ring (DSR)** #(Cont'd)

(K) Rates & Charges (Cont'd)

(3) Ports – Monthly Rates per Enhanced Node (Cont'd)
(Jurisdiction: All Jurisdictions)

Port Type	Month to Month
DS1 at OC3 Node	$28.00
DS1 at OC12 Node	$28.00
DS1 at OC48 Node	$28.00
DS1 at OC192 Node	$28.00
DS3 or STS1 at OC3 Node	$115.00
DS3 or STS1 at OC12 Node	$115.00
DS3 or STS1 at OC48 Node	$115.00
DS3 or STS1 at OC192 Node	$115.00
DS3 Transmux at OC3 Node*	$400.00
DS3 Transmux at OC12 Node	$400.00
DS3 Transmux at OC48 Node	$400.00
DS3 Transmux at OC192 Node	$400.00

Service availability limited. Refer to # footnote on Page 20-128.

© 2022 Frontier Communications Parent, Inc. All rights reserved.

ACCESS SERVICE

20. **Ethernet Private Line** (Cont'd)

20.2 **Dedicated SONET Ring (DSR)** #(Cont'd)

(K) Rates & Charges (Cont'd)

(3) Ports – Monthly Rates per Node (Cont'd)

Port Type	3 Year Term	5-Year Term	7-Year Term
OC3 at OC12 Node	$343.00	$343.00	$343.00
OC3 at OC48 Node	$343.00	$343.00	$343.00
OC3 at OC192 Node	$343.00	$343.00	$343.00
OC3c at OC12 Node	$274.00	$274.00	$274.00
OC3c at OC48 Node	$274.00	$274.00	$274.00
OC3c at OC192Node	$274.00	$274.00	$274.00
OC12 at OC48 Node	$642.00	$642.00	$642.00
OC12 at OC192 Node	$642.00	$642.00	$ 642.00
OC12c at OC48 Node	$514.00	$514.00	$514.00
OC12c at OC192Node	$514.00	$514.00	$514.00
OC48 at OC192 Node	$1,400.00	$1,400.00	$1,400.00
OC48c at OC192Node	$1,200.00	$1,200.00	$1,200.00

Service availability limited. Refer to # footnote on Page 20-128.

© 2022 Frontier Communications Parent, Inc. All rights reserved.

ACCESS SERVICE

20. **Ethernet Private Line** (Cont'd)

20.2 **Dedicated SONET Ring (DSR)** #(Cont'd)

(K) Rates & Charges (Cont'd)

(3) Ports – Monthly Rates perEnhanced Node (Cont'd)

Port Type	Month to Month
OC3 at OC12 Node	$343.00
OC3 at OC48 Node	$343.00
OC3 at OC192 Node	$343.00
OC3c at OC12 Node	$274.00
OC3c at OC48 Node	$274.00
OC3c at OC192Node	$274.00
OC12 at OC48 Node	$642.00
OC12 at OC192 Node	$642.00
OC12c at OC48 Node	$514.00
OC12c at OC192Node	$514.00
OC48 at OC192 Node	$1,400.00
OC48c at OC192Node	$1,200.00

Service availability limited. Refer to # footnote on Page 20-128.

© 2022 Frontier Communications Parent, Inc. All rights reserved.

ACCESS SERVICE

20. **Ethernet Private Line** (Cont'd)

20.2 **Dedicated SONET Ring (DSR)** #(Cont'd)

(K) Rates & Charges (Cont'd)

(3) Ports – Monthly Rates per Enhanced Node (Cont'd)

Port Type -Special	Month to Month	3-Year Term	5-Year Term	7-Year Term
Gigabit Ethernet				
GigE1 at OC3 Node*	$230.00	$230.00	$230.00	$230.00
GigE1 at OC12 Node	$230.00	$230.00	$230.00	$230.00
GigE1 at OC48 Node	$230.00	$230.00	$230.00	$230.00
GigE1 at OC192 Node	$230.00	$230.00	$230.00	$230.00
GigE3 at OC12 Node	$345.00	$345.00	$345.00	$345.00
GigE3 at OC48 Node	$345.00	$345.00	$345.00	$345.00
GigE3 at OC192 Node	$345.00	$345.00	$345.00	$345.00
GigE6 at OC12 Node	$455.00	$455.00	$455.00	$455.00
GigE6 at OC48 Node	$455.00	$455.00	$455.00	$455.00
GigE6 at OC192 Node	$455.00	$455.00	$455.00	$455.00
GigE9 at OC12 Node	$535.00	$535.00	$535.00	$535.00
GigE9 at OC48 Node	$535.00	$535.00	$535.00	$535.00
GigE9 at OC192 Node	$535.00	$535.00	$535.00	$535.00

Service availability limited. Refer to # footnote on Page 20-128.

© 2022 Frontier Communications Parent, Inc. All rights reserved.

ACCESS SERVICE

20. **Ethernet Private Line** (Cont'd)

20.2 **Dedicated SONET Ring (DSR)** #(Cont'd)

(K) Rates & Charges (Cont'd)

(3) Ports – Monthly Rates perEnhanced Node (Cont'd)

Port Type -Special	Month to Month	3-Year Term	5-Year Term	7-Year Term
Gigabit Ethernet				
GigE12 at OC48 Node	$645.00	$645.00	$645.00	$645.00
GigE12 at OC192 Node	$645.00	$645.00	$645.00	$645.00
GigE24 at OC48 Node	$880.00	$880.00	$880.00	$880.00
GigE24 at OC192 Node	$880.00	$880.00	$880.00	$880.00

Service availability limited. Refer to # footnote on Page 20-128.

© 2022 Frontier Communications Parent, Inc. All rights reserved.

ACCESS SERVICE

20. **Ethernet Private Line** (Cont'd)

20.2 **Dedicated SONET Ring (DSR)** #(Cont'd)

(K) Rates & Charges (Cont'd)

(4) Ports – Nonrecurring Charges

(a) Initial Installation Charges: Month-to-Month ports only
(Jurisdiction: All Jurisdictions)

Port Type	First	Additional
DS1 at OC3 Node	$525.00	$210.00
DS1 at OC12 Node	525.00	210.00
DS1 at OC48 Node	525.00	210.00
DS1 at OC192 Node	525.00	210.00
DS3 or STS1 at OC3 Node	805.00	343.00
DS3 or STS1 at OC12 Node	805.00	343.00
DS3 or STS1 at OC48 Node	805.00	343.00
DS3 or STS1 at OC192 Node	805.00	343.00
DS3 Transmux at OC3 Node*	805.00 805.00	343.00 210.00
DS3 Transmux at OC12 Node	805.00 805.00	343.00 210.00
DS3 Transmux at OC48 Node	805.00 805.00	343.00 210.00
DS3 Transmux at OC192 Node	805.00 805.00	343.00 210.00

Service availability limited. Refer to # footnote on Page 20-128.

© 2022 Frontier Communications Parent, Inc. All rights reserved.

ACCESS SERVICE

20. **Ethernet Private Line** (Cont'd)
Dedicated SONET Ring (DSR) #(Cont'd)

20.2

Rates & Charges (Cont'd)

K)

Ports – Nonrecurring Charges (Cont'd)

(4)

Initial Installation Charges: Month-to-Month ports only (Cont'd)

(a) (Jurisdiction: All Jurisdictions)

Port Type	First	Additional
OC3 at OC12 Node	$805.00	$343.00
OC3 at OC48 Node	805.00	343.00
OC3 at OC192 Node	805.00	343.00
OC3c at OC12 Node	805.00	343.00
OC3c at OC48 Node	805.00	343.00
OC3c at OC192 Node	805.00	343.00
OC12 at OC48 Node	767.00	327.00
OC12 at OC192 Node	767.00	327.00
OC12c at OC48 Node	767.00	327.00
OC12c at OC192 Node	767.00	327.00
OC48 at OC192 Node	767.00	327.00
OC48c at OC192 Node	767.00	327.00

Service availability limited. Refer to # footnote on Page 20-128.

© 2022 Frontier Communications Parent, Inc. All rights reserved.

ACCESS SERVICE

20. **Ethernet Private Line** (Cont'd)

20.2 **Dedicated SONET Ring (DSR)** #(Cont'd)

(K) Rates & Charges (Cont'd)

(4) Ports – Nonrecurring Charges (Cont'd)

(a) Initial Installation Charges: Month-to-Month ports only (Cont'd)
(Jurisdiction: All Jurisdictions)

Port Type	I	First	Additional
Gigabit Ethernet*			
GigE1 at OC3 Node		$767.00	$327.00
GigE1 at OC12 Node		767.00	327.00
GigE1 at OC48 Node		767.00	327.00
GigE1 at OC192 Node		767.00	327.00
GigE3 at OC12 Node		767.00	327.00
GigE3 at OC48 Node		767.00	327.00
GigE3 at OC192 Node		767.00	327.00
GigE6 at OC12 Node		767.00	327.00
GigE6 at OC48 Node		767.00	327.00
GigE6 at OC192 Node		767.00	327.00
GigE9 at OC12 Node		767.00	327.00
GigE9 at OC48 Node		767.00	327.00
GigE9 at OC192 Node		767.00	327.00
GigE12 at OC48 Node		767.00	327.00
GigE12 at OC192 Node		767.00	327.00
GigE24 at OC48 Node		767.00	327.00
GigE24 at OC192 Node		767.00	327.00

Service availability limited. Refer to # footnote on Page 20-128.

© 2022 Frontier Communications Parent, Inc. All rights reserved.

ACCESS SERVICE

20. **Ethernet Private Line** (Cont'd)

20.2 **Dedicated SONET Ring (DSR)** #(Cont'd)

(K) Rates & Charges (Cont'd)

(5) Partial Ring Pass-Through interface, per Interface
(Jurisdiction: All Jurisdictions)

	Monthly Rate
3-Year Term	
OC3	$1,330.00
OC12	2,900.00
OC48	4,800.00
OC192	10,000.00
5-Year Term	
OC3	$1,290.00
OC12	2,700.00
OC48	4,604.00
OC192	9,200.00
7-Year Term	
OC3	$1,186.00
OC12	2,430.00
OC48	4,143.00
OC192	8,280.00

(6) Partial Ring Channel Mapping,
per channel mapped on a partial ring

Channel Type	Nonrecurring Charge
DS1	$150.00
DS3 or STS1	150.00
OC3	150.00
OC3c	150.00
OC12	150.00
OC12c	150.00
OC48	150.00
OC48c	150.00
GigE1	150.00
GigE3	150.00
GigE6	150.00
GigE9	150.00
GigE12	150.00
GigE24	150.00

Service availability limited. Refer to # footnote on Page 20-128.

© 2022 Frontier Communications Parent, Inc. All rights reserved.

ACCESS SERVICE

20. **Ethernet Private Line** (Cont'd)

20.2 **Dedicated SONET Ring (DSR)** #(Cont'd)

(K) Rates and Charges (Cont'd)

(7) Optional Features

(a) Customer Service Management Optional Feature

(1) Service Level, per ring

Service Level	Monthly Rate
Level 1: Network View only	
3-Year	$250.00
5-Year	250.00
7-Year	250.00
Level 2: Network View and Basic Reports	
3-Year	$450.00
5-Year	450.00
7-Year	450.00
Level 3: Network View, Basic Reports and Reconfiguration	
3-Year	$850.00
5-Year	850.00
7-Year	850.00

Service availability limited. Refer to # footnote on Page 20-128.

© 2022 Frontier Communications Parent, Inc. All rights reserved.

ACCESS SERVICE

20. **Ethernet Private Line** (Cont'd)

20.2 **Dedicated SONET Ring (DSR)** #(Cont'd)

(K) Rates and Charges (Cont'd)

(7) Optional Features (Cont'd)

(a) Customer Service Management Optional Feature (Cont'd)

(2) Preplanned Port, per port

(Rates and Charges are the same as those set forth in 20.2(K)(4) preceding)

		Nonrecurring Charge
(3)	Node Setup, per node on the ring equipped during initial establishment	$200.00
(4)	Initial CSM Setup, first partition with up to 6 users	$500.00
(5)	Setup of additional Partition or change in CSM Service Level, each	$500.00
(6)	Setup of Additional Users, up to 6 additional users	$350.00
(7)	Add/remove Node, per node added to, or removed from, the CSM ring	$200.00
(8)	Telephone Company performed Reconfiguration, per mapping	$300.00
(9)	Consultation and support, each 30 minutes or fraction thereof	$100.00

Service availability limited. Refer to # footnote on Page 20-128.

© 2022 Frontier Communications Parent, Inc. All rights reserved.

ACCESS SERVICE

20. **Ethernet Private Line** (Cont'd)

20.2 **Dedicated SONET Ring (DSR)** #(Cont'd)

(K) Rates and Charges (Cont'd)

(8) Asymmetrical Port Facility (APF)

(a) Monthly Rates, per APF

(1) Month to Month Billing

APF Type	Monthly Rate
OC3 APF	
- OC3 Mileage, per mile	$ 500.00
- OC3 Channel Extension, each	3,800.00
OC12 APF	
- OC12 Mileage, per mile	1,000.00
- OC12 Channel Extension, each	7,000.00
OC48 APF	
- OC48 Mileage, per mile	3,500.00
- OC48 Channel Extension, each	11,000.00

(2) Term Plan Billing

APF Type	Monthly Rate 3-Year Term
OC3 APF	
- OC3 Mileage, per mile	$ 375.00
- OC3 Channel Extension, each	2,850.00
OC12 APF	
- OC12 Mileage, per mile	750.00
- OC12 Channel Extension, each	5,500.00
OC48 APF	
- OC48 Mileage, per mile	2,625.00
- OC48 Channel Extension, each	7,500.00

Service availability limited. Refer to # footnote on Page 20-128.

© 2022 Frontier Communications Parent, Inc. All rights reserved.

ACCESS SERVICE

20. **Ethernet Private Line** (Cont'd)

20.2 **Dedicated SONET Ring (DSR)** #(Cont'd)

(K) Rates and Charges (Cont'd)

(8) Asymmetrical Port Facility (APF) (Cont'd)

(a) Monthly Rates, per APF (Cont'd)

(2) Term Plan Billing (Cont'd)

APF Type	Monthly Rate 5-Year Term
OC3 APF	
- OC3 Mileage, per mile	$ 337.50
- OC3 Channel Extension, each	2,565.00
OC12 APF	
- OC12 Mileage, per mile	675.00
- OC12 Channel Extension, each	4,500.00
OC48 APF	
- OC48 Mileage, per mile	2,362.50
- OC48 Channel Extension, each	6,350.00

APF Type	Monthly Rate 7-Year Term
OC3 APF	
- OC3 Mileage, per mile	$ 303.75
- OC3 Channel Extension, each	2,308.50
OC12 APF	
- OC12 Mileage, per mile	607.50
- OC12 Channel Extension, each	4,050.00
OC48 APF	
- OC48 Mileage, per mile	2,126.25
- OC48 Channel Extension, each	5,715.00

Service availability limited. Refer to # footnote on Page 20-128.

© 2022 Frontier Communications Parent, Inc. All rights reserved.

ACCESS SERVICE

20. **Ethernet Private Line** (Cont'd)

20.2 **Dedicated SONET Ring (DSR)** #(Cont'd)

(K) Rates and Charges (Cont'd)

(8) Asymmetrical Port Facility (APF) (Cont'd)

(b) Nonrecurring Charges

(1) APF Mapping Charge,
- per lower capacity channel mapped between two APFs on the same DSR

Channel Type	Nonrecurring Charge
All Channel Types	$ 500.00

Service availability limited. Refer to # footnote on Page 20-128.

© 2022 Frontier Communications Parent, Inc. All rights reserved.

ACCESS SERVICE

20. **Ethernet Private Line** (Cont'd)

20.2 **Dedicated SONET Ring (DSR)** #(Cont'd)

(K) Rates and Charges (Cont'd)

(9) Subtending Node Facility (SNF)

(a) Monthly Rates, per SNF extended

(1) Term Plan Billing

SNF Type	3-Year Term	Monthly Rate
OC3 SNF		
- OC3 Mileage, per mile		$ 375.00
- OC3 Channel Extension, each		2,850.00
OC12 SNF		
- OC12 Mileage, per mile		750.00
- OC12 Channel Extension, each		5,500.00
OC48 SNF		
- OC48 Mileage, per mile		2,625.00
- OC48 Channel Extension, each		7,500.00

SNF Type	5-Year Term	Monthly Rate
OC3 SNF		
- OC3 Mileage, per mile		$ 337.50
- OC3 Channel Extension, each		2,565.00
OC12 SNF		
- OC12 Mileage, per mile		675.00
- OC12 Channel Extension, each		4,500.00
OC48 SNF		
- OC48 Mileage, per mile		2,362.50
- OC48 Channel Extension, each		6,350.00

Service availability limited. Refer to # footnote on Page 20-128.

© 2022 Frontier Communications Parent, Inc. All rights reserved.

ACCESS SERVICE

20. **Ethernet Private Line** (Cont'd)

20.2 **Dedicated SONET Ring (DSR)** # (Cont'd)

(K) Rates and Charges (Cont'd)

(9) Subtending Node Facility (SNF) (Cont'd)

(a) Monthly Rates, per SNF extended (Cont'd)

(1) Term Plan Billing (Cont'd)

SNF Type	Monthly Rate 7-Year Term
OC3 SNF	
- OC3 Mileage, per mile	$ 303.75
- OC3 Channel Extension, each	2,308.50
OC12 SNF	
- OC12 Mileage, per mile	607.50
- OC12 Channel Extension, each	4,050.00
OC48 SNF	
- OC48 Mileage, per mile	2,126.25
- OC48 Channel Extension, each	5,715.00

Service availability limited. Refer to # footnote on Page 20-128.

© 2022 Frontier Communications Parent, Inc. All rights reserved.

ACCESS SERVICE

20. **Ethernet Private Line** (Cont'd)

20.2 **Dedicated SONET Ring (DSR)** #(Cont'd)

(K) Rates & Charges (Cont'd)

(9) Subtending Node Facility (SNF) (Cont'd)

(b) Monthly Rates, per port node

Port Node Type	Monthly Rate 3-Year Rate
OC3 at OC3 Node	$ 600.00
OC3 at OC12 Node	600.00
OC3 at OC48 Node	600.00
OC3 at OC192 Node	600.00
OC12 at OC12 Node	850.00
OC12 at OC48 Node	850.00
OC12 at OC192 Node	850.00
OC48 at OC48 Node	1,800.00
OC48 at OC192 Node	1,800.00
OC192 at OC192 Node	4,500.00

Service availability limited. Refer to # footnote on Page 20-128.

© 2022 Frontier Communications Parent, Inc. All rights reserved.

ACCESS SERVICE

20. **Ethernet Private Line** (Cont'd)

20.2 **Dedicated SONET Ring (DSR)** #(Cont'd)

(K) Rates & Charges (Cont'd)

(9) Subtending Node Facility (SNF) (Cont'd)

(b) Monthly Rates, per port node (Cont'd)

Port Node Type	Monthly Rate 5-Year Rate
OC3 at OC3 Node	$ 500.00
OC3 at OC12 Node	500.00
OC3 at OC48 Node	500.00
OC3 at OC192 Node	500.00
OC12 at OC12 Node	750.00
OC12 at OC48 Node	750.00
OC12 at OC192 Node	750.00
OC48 at OC48 Node	1,600.00
OC48 at OC192 Node	1,600.00
OC192 at OC192 Node	3,800.00

Service availability limited. Refer to # footnote on Page 20-128.

© 2022 Frontier Communications Parent, Inc. All rights reserved.

ACCESS SERVICE

20. **Ethernet Private Line** (Cont'd)

20.2 **Dedicated SONET Ring (DSR)** #(Cont'd)

(K) Rates & Charges (Cont'd)

(9) Subtending Node Facility (SNF) (Cont'd)

(b) Monthly Rates, per port node (Cont'd)

Port Node Type	Monthly Rate 7-Year Rate
OC3 at OC3 Node	$ 450.00
OC3 at OC12 Node	450.00
OC3 at OC48 Node	450.00
OC3 at OC192 Node	450.00
OC12 at OC12 Node	700.00
OC12 at OC48 Node	700.00
OC12 at OC192 Node	700.00
OC48 at OC48 Node	1,500.00
OC48 at OC192 Node	1,500.00
OC192 at OC192 Node	3,000.00

Service availability limited. Refer to # footnote on Page 20-128.

© 2022 Frontier Communications Parent, Inc. All rights reserved.

ACCESS SERVICE

20. **Ethernet Private Line** (Cont'd)

20.2 **Dedicated SONET Ring (DSR)** #(Cont'd)

(K) Rates & Charges (Cont'd)

(10) Dual Node Cross-Connect Charge,
- per lower capacity channel provided through two interconnecting nodes in a subtending ring arrangement

Channel Type	Nonrecurring Charge
All Channel Types	$500.00

Service availability limited. Refer to # footnote on Page 20-128.

© 2022 Frontier Communications Parent, Inc. All rights reserved.

ACCESS SERVICE

20. **Ethernet Private Line** (Cont'd)

20.3 **Ethernet Private Line#**

(A) General

(1) Ethernet Private Line service provides managed optical transport of data signals of various speeds over the Telephone Company's shared network. Ethernet Private Line architecture allows for point-to-point transmissions of varying bandwidths between customer designated locations.

(2) Ethernet Private Line is provided where Telephone Company fiber optic facilities and equipment with sufficient bandwidth capacity permit.

(B) Service Description

(1) Ethernet Private Line service consists of 3 components, an On-Net Channel Extension, On-Net Channel Mileage, and an Access Aggregation Port.

(a) **On-Net Channel Extension** provides the communications path and interface termination from a customer's location to the serving wire center. The On-Net Channel Extension utilizes a Telephone Company optical network element at the customer-designated location.

(b) **On-Net Channel Mileage** provides transport between two telephone company Serving Wire Centers (SWCs). On-Net Channel Mileage is measured in airline miles between the SWCs involved.

(c) **Access Aggregation Ports** support multiple Ethernet signal(s) that are mapped into SONET at one end of the channel.

(2) Ethernet Private Line Channel Extensions may be available as protected or unprotected.

(a) For protected services, the Telephone Company will provision the service over diversely routed, self-healing architecture. Protected services allow for a near 100% availability and restoration in the event of a network failure.

(b) For unprotected services, the Telephone Company does not guarantee the service will be provisioned over diversely routed facilities.

Effective March 30, 2007, orders for new Ethernet Private Line are no longer permitted. The Telephone Company will continue to provide Ethernet Private Line pursuant to this Section 20.3 on any existing Ethernet Private Line that is in-service as of March 30, 2007, or any order for Ethernet Private Line that is placed with the Telephone Company prior to March 29, 2007 (collectively, Existing Ethernet Private Line), subject to the following conditions:

a. For any Existing Ethernet Private Line that is currently subscribed to a term plan (i.e., commitment periods of 1-, 3-, 5-, and 7-years), the Telephone Company will continue to provide the Existing Ethernet Private Line for an additional six (6) months beyond the expiration date of the customer's current commitment period, or until the customer replaces the Existing Ethernet Private Line with a comparable Telephone Company provided service, or discontinues service, whichever comes first. Effective March 30, 2007, moves, additions, and/or changes are not permitted.

b. For any Existing Ethernet Private Line whose term plan expired prior to March 30, 2007, but the Existing Ethernet Private Line continued on a month-to-month basis at prevailing rates, the Telephone Company will continue to provide the Existing Ethernet Private Line until September 30, 2007, or until the customer replaces the Existing Ethernet Private Line with a comparable Telephone Company provided service, or discontinues service, whichever comes first. Effective March 30, 2007, moves, additions, and/or changes are not permitted.

© 2022 Frontier Communications Parent, Inc. All rights reserved.

ACCESS SERVICE

20. **Ethernet Private Line** (Cont'd)

20.3 **Ethernet Private Line** # (Cont'd)

(B) Service Description (Cont'd)

(3) The On-Net Aggregation Port will only be permitted at a customer premises location.

(a) This port must utilize a SONET interface (i.e., OC3, OC12, OC48) at the customer demarcation point. A Ethernet Private Line Aggregation Port can only reside at one end of a Ethernet Private Line circuit. The end of a Ethernet Private Line circuit that is not assigned to a Ethernet Private Line Access Aggregation Port must have a native Ethernet hand-off.

(4) Channel Interfaces

SONET Mapped Interface	SONET Mappings & Ports	
	STS1s	Aggregation Port
100 Mbps Ethernet (50Mb) Mapped to STS1	1 - STS1	OC3, OC12, OC48
100 Mbps Ethernet (Full Rate) Mapped to OC3c	3 - STS1s	OC12, OC48
1 Gbps Ethernet (50Mb) Mapped to OC3	1 - STS1	OC3, OC12, OC48
1 Gbps Ethernet (150Mb) Mapped to OC3	3 - STS1s	OC12, OC48
1 Gbps Ethernet (300Mb) Mapped to OC12	6 - STS1s	OC12, OC48
1 Gbps Ethernet (450Mb) Mapped to OC12	9 - STS1s	OC12, OC48
1 Gbps Ethernet (600Mb) Mapped to OC12	12 - STS1s	OC48
1 Gbps Ethernet (Full Rate) Mapped to OC48	21 - STS1s	OC48
1 Gbps Fibre Channel (Full Rate) Mapped to OC48	19 - STS1s	OC48
1 Gbps FICON (Full Rate) Mapped to OC48	19 - STS1s	OC48

Aggregation Ports	Total STS1s	
OC3 Port - Supports Up to 3 Total Mapped STS1s	3 - Total STS1s	N/A
OC12 Port - Supports Up to 12 Mapped STS1s	12 - Total STS1s	N/A
OC48 Port - Supports Up to 48 Mapped STS1s	48 - Total STS1s	N/A

Service availability limited. Refer to # footnote on Page 20-192.

© 2022 Frontier Communications Parent, Inc. All rights reserved.

ACCESS SERVICE

20. **Ethernet Private Line** (Cont'd)

20.3 **Ethernet Private Line #** (Cont'd)

(B) Service Description (Cont'd)

(5) Ethernet Private Line service transmissions are provided in the following protocols/data interfaces:

- Ethernet: transmits Ethernet at 10 Mbps
- Fast Ethernet: transmits at 100 Mbps
- Gigabit Ethernet: transmits at 1 Gbps.
- Gigabit Fibre Channel: transmits at 1 Gbps.
- Gigabit FICON: transmits at 1 Gbps.
- Ethernet mapped to STS1
- Fast Ethernet Mapped to STS1
- Fast Ethernet Mapped to OC3c
- Gigabit Ethernet Mapped to OC3
- Gigabit Ethernet Mapped to OC12
- Gigabit Ethernet Mapped to OC12c
- Gigabit Ethernet Mapped to OC48
- Gigabit Fibre Channel Mapped to OC48
- Gigabit FICON Mapped to OC48
- Ethernet Private Line Services Mapped to OC3 Access Aggregation Port
- Ethernet Private Line Services Mapped to OC12 Access Aggregation Port
- Ethernet Private Line Services Mapped to OC48 Access Aggregation Port

Service availability limited. Refer to # footnote on Page 20-192.

© 2022 Frontier Communications Parent, Inc. All rights reserved.

ACCESS SERVICE

20. **Ethernet Private Line** (Cont'd)

20.3 **Ethernet Private Line** #(Cont'd)

(B) Service Description (Cont'd)

(6) Ethernet Private Line services may connect to other Telephone Company services capable of transmitting the specified protocol.

(a) A Ethernet Private Line Ethernet to SONET mapped service may be multiplexed onto an Express Connect of a higher bit rate or a Flex Express Connect of a higher bit rate.

(b) A Ethernet Private Line Ethernet to SONET mapped service may connect to an equal speed Custom Connect Rider at a Single Route CDL, Diverse Route CDL, or a CO Node. When connecting to Custom Connect services a CDL Link or Rider as set forth in Section 20(D)(j) preceding will apply. Ethernet Private Line services cannot terminate on a customer provided node of a connecting service.

(c) A Ethernet Private Line Ethernet mapped to STS1; Fast Ethernet mapped to STS1 and/or OC3c; Gigabit Ethernet mapped to OC3, OC12, OC12c and/or OC48 service may be multiplexed onto a port on a higher speed node of a Dedicated SONET Ring (DSR) service for transport over the higher bit rate DSR.

(d) An Ethernet Private Line Gigabit Ethernet service may be multiplexed onto a port of a higher speed node of a Dedicated SONET Ring (DSR) service for transport over the higher bit rate DSR at an equivalent speed GigE.

(e) An Ethernet Private Line Fast Ethernet mapped to OC3c and/or Gigabit Ethernet mapped to OC12c service may connect to an equal speed Optical Transport Channel of a Dedicated SONET Optical Transport Service (DSOTS)ring at a node on the DSOTS ring.

(f) An Ethernet Private Line Gigabit Ethernet Full Rate may connect to Gigabit Ethernet Optical Transport Channel of a Dedicated SONET Optical Transport Service (DSOTS)at a node on the DSOTS ring.

(g) An Ethernet Private Line Gigabit Fibre Channel and/or Gigabit FICON service may be connected to a Gigabit Fibre Channel and/or Gigabit FICON Optical Transport Channel on a Dedicated SONET Optical Transport Service (DSOTS)ring at a node on the DSOTS ring.

(h) Ethernet Private Line may also be connected to the following Telephone Company provided services, where such connections are technically and operationally feasible, as determined by the Telephone Company.

- dedicated SONET ring service
- point-to-point SONET service
-- DWDM ring service
- SONET entrance facility service

Service availability limited. Refer to # footnote on Page 20-192.

© 2022 Frontier Communications Parent, Inc. All rights reserved.

ACCESS SERVICE

20. **Ethernet Private Line** (Cont'd)

20.3 **Ethernet Private Line** #(Cont'd)

(C) Technical Specifications

The technical specifications for the protocols transmitted over Ethernet Private Line are delineated in the following Technical References:

Protocol	Technical Reference
SONET	GR-253-CORE, Issue 4
10 Mbps Ethernet	IEEE 802.3-2005/Cor2/D2.0-2007
100 Mbps Fast Ethernet	IEEE 802.3u-1995
1 Gbps Ethernet	IEEE 802.3z-1998
1 Gbps Fibre Channel	ANSI INCITS 303-1998 (R2003)
1 Gbps FICON	ANSI INCITS 296-1997 (R2007)

(D) Terms and Conditions

(1) A planning session is required prior to the submission of an order for Ethernet Private Line. Ethernet Private Line is available based on negotiated intervals as described in Section 5.1.7 preceding.

(2) Where distance limitations affect the Telephone Company's ability to engineer end-to-end transport of some protocols, the Telephone Company will notify the customer that it cannot provide the requested service.

(3) All signals generated by the customer's equipment (CPE/customer provided equipment) must meet industry standards and specifications. See (C) of this section preceding.

(4) The customer is responsible to ensure that its equipment meets any applicable technical requirements or limitations for the protocol being transmitted.

(5) The customer is responsible for any error detection and error correction of the data generated by its equipment.

(6) The Telephone company assumes no responsibility for the quality of the signal generated by CPE and will deliver the signal in the format provided by the customer.

Service availability limited. Refer to # footnote on Page 20-192.

© 2022 Frontier Communications Parent, Inc. All rights reserved.

ACCESS SERVICE

20. **Ethernet Private Line** (Cont'd)

20.3 **Ethernet Private Line #**(Cont'd)

(D) Terms and Conditions (Cont'd)

(7) When requested by the customer, one or more Ethernet Private Line Ethernet, Fast Ethernet, Gigabit Ethernet, Gigabit Fibre Channel, and/or FICON signal(s) may be mapped into a SONET signal. The options for mapping a single signal are:

- 10 Mbps Ethernet to STS1
- 100 Mbps Fast Ethernet to STS1, OC3c
- 1 Gbps Gigabit Ethernet to OC3, OC12, OC12c, OC48
- 1 Gbps Gigabit Fibre Channel to OC48
- 1 Gbps Gigabit FICON to OC48

The options for mapping multiple signals are:

- 10 Mbps Ethernet to OC3, OC12, OC48
- 100 Mbps Fast Ethernet to OC3, OC12, OC48
- 1 Gbps Gigabit Ethernet to OC3, OC12, OC48
- 1 Gbps Gigabit Fibre Channel to OC48
- 1 Gbps Gigabit FICON to OC48

Only one end of an Ethernet Private Line channel may be Ethernet-to-SONET mapped. Mapping of multiple signals requires placement of an Ethernet Private Line Access Aggregation Port as described in (B)(1) preceding.

(8) Where facilities, conditions, and/or sufficient bandwidth capacity permit, the Telephone Company, upon customer request, may provide a diverse fiber path between the customer designated location and its Serving Wire Center. Rates and charges may apply as specified in the Special Construction tariff.

(E) Rate Regulations

(1) Ethernet Private Line is available for 1, 3, 5, and 7-year commitment periods/term plans.

(2) The minimum service period for Ethernet Private Line is one year.

(3) Upon expiration of a commitment period, the customer may choose to continue service under a new commitment period or cancel service. If the customer does not choose one of these options, the Telephone Company will continue the service at the monthly rate for the commitment period.

]

Service availability limited. Refer to # footnote on Page 20-192.

© 2022 Frontier Communications Parent, Inc. All rights reserved.

ACCESS SERVICE

20. **Ethernet Private Line** (Cont'd)

20.3 **Ethernet Private Line#** (Cont'd)

(E) Rate Regulations (Cont'd)

(4) The customer has the option, within sixty (60) days prior to the expiration date for its commitment period, to extend its expiring Plan to a longer commitment period, for which time-in-service credit will be allowed for the expiring plan. The commitment period selected for the extended plan must be longer than the commitment period of the expiring plan, e.g., an expiring 1-Year Term may be extended to either a 3-Year, 5-Year, or 7-Year Commitment period. Time-in-service credit lessens the actual time commitment for the extended plan. For example, Time in Service Credit for an expiring 3-Year term plan applied toward a new 7-year plan equals a new commitment period of 4 years at the 7-year plan rate. The rate for the longer commitment period will apply effective with the first bill day following expiration of the commitment period for the existing plan and continue through the remainder of the commitment period associated with the extended plan. No adjustment for the increased discount associated with the extended plan will be made to the monthly rates already billed on the expiring plan.

(5) A change in protocol of an On-Net Channel Extension is treated as a discontinuance of service and an installation of both, a new On-Net Channel Extension and the appropriate On-Net Channel Mileage, and will result in Termination Liability Charges applied for the discontinuance of the existing service.

(6) Monthly recurring charges (MRCs) apply for On-Net Channel Extensions, On-Net Channel Mileage, and Access Aggregation Ports.

(7) The MRC for the Channel Extension applies per channel extension and at the specified term plan rate. The On-Net Channel Extension charge is also dependent on the type of facility interface provided.

(8) The MRC for the Channel Mileage applies on a fixed and on a per mile basis for the airline miles between the Serving Wire Centers. The fixed portion of Channel Mileage is applied at each termination of the interoffice portion of the circuit. When the mileage calculation results in a fraction of a mile, it is rounded up to the next whole mile.

Service availability limited. Refer to # footnote on Page 20-192.

© 2022 Frontier Communications Parent, Inc. All rights reserved.

ACCESS SERVICE

20. **Ethernet Private Line** (Cont'd)

20.3 **Ethernet Private Line #** (Cont'd)

(E) Rate Regulations (Cont'd)

(9) The MRC for the Access Aggregation Port applies per port and at the specified term plan rate. The Access Aggregation Port charge is also dependent on the type of facility interface provided.

(10) Nonrecurring charges (apply for the initial installation of On-Net Channel Extensions, On-Net Channel Mileage, and Access Aggregation Ports.

(11) When connecting Ethernet Private Line services to other Telephone Company provided services, the rates and charges, and terms and conditions of the connecting services also apply.

Service availability limited. Refer to # footnote on Page 20-192.

© 2022 Frontier Communications Parent, Inc. All rights reserved.

ACCESS SERVICE

20. **Ethernet Private Line** (Cont'd)

20.3 **Ethernet Private Line #**(Cont'd)

(F) Termination Liability

(1) Cancellation charges as set forth in Section 5.3.2 preceding apply if an ASR for Ethernet Private Line is cancelled.

(2) The MRCs and for Ethernet Private Line are listed in (H) following.

(3) Termination liability applies to On-Net Channel Mileage, On-Net Channel Extension and Access Aggregation Port service components and applies when either is disconnected prior to expiration of the commitment period, i.e., term plan.

(4) The termination liability charge is equal to 25% of the remaining monthly charges for the balance of the commitment period beginning with the date of disconnection or cancellation, and ending with the expiration date of the commitment period.

(5) Termination liability applies in addition to any charges associated with satisfying the minimum period obligation.

(6) When the service includes connection to another service, termination liability for the connecting service also applies in accordance with the regulations specified for that connecting service.

(7) Termination liability will not apply to the existing service when; (1) an Ethernet Private Line Ethernet service is upgraded to a higher bit rate Ethernet Private Line Ethernet service (e.g., an Ethernet Private Line Ethernet 10 Mbps service is changed to a Ethernet Private Line Ethernet 100 Mbps service or to a Ethernet Private Line Ethernet 1 Gbps service), and (2), the new term is equal to or of greater length than the term for the terminating service.

(8) Termination liability will not apply to the existing service when a Ethernet Private Line Ethernet service is rearranged to enable interconnection with an Enhanced Central Office Node on a Dedicated SONET Ring (DSR) as specified in 20.2, preceding, provided that (1) the rearrangement occurs at the same time as the DSR is being established, (2) a new commitment period is established for the Ethernet Private Line Ethernet service that matches the commitment period of the DSR, and (3) the change does not result in a change of either of the end points of the circuit.

(9) Termination liability will not apply if a customer changes its term plan to a longer commitment period as explained in (E) preceding.

(10) Termination liability will not apply to the existing service when; (1) a Ethernet Private Line Ethernet service is upgraded to a higher bit rate Ethernet Private Line Ethernet service (e.g., a Ethernet Private Line Ethernet 10 Mbps service is changed to a Ethernet Private Line Ethernet 100 Mbps service or to a Ethernet Private Line Ethernet 1 Gbps service), and (2) the new term is equal to or of greater length than the term for the terminating service.

Service availability limited. Refer to # footnote on Page 20-192.

© 2022 Frontier Communications Parent, Inc. All rights reserved.

ACCESS SERVICE

20. **Ethernet Private Line** (Cont'd)

20.3 **Ethernet Private Line #** (Cont'd)

(G) Channel Interfaces

The channel interfaces for Ethernet Private Line are as follows.

CIs	CIs	CIs
04LN9.04LN9.10T		
02LNF.A07	02LNF.A02	02LNF.A04
02SOF.F	02SOF.B	02SOF.X
04SOF.F	04SOF.B	02SOF.D
04SOF.X	04SOF.D	02OPF.A02
02OPF.A04	02OPF.A07	04CMF.C3
04CMF.C12	04CMF.C48	

Service availability limited. Refer to # footnote on Page 20-192.

© 2022 Frontier Communications Parent, Inc. All rights reserved.

ACCESS SERVICE

20. **Ethernet Private Line** (Cont'd)

20.3 **Ethernet Private Line #** (Cont'd)

(H) Rates and Charges

(1) On-Net Channel Extensions, per channel extension

(a) **Protected** Channel Extensions

(Jurisdiction: Arizona, California, Illinois, Indiana, Nevada, and North Carolina) (C)

(1) 1-year Commitment Period/Term Plan

Interface Type		Monthly Rate	Nonrecurring Charge
10 Mbps Ethernet (Full Rate)		$1,200.00	$1.00
100 Mbps Ethernet (50 Mbps)*		1,920.00	1.00
100 Mbps Ethernet (Full Rate)		2,630.00	1.00
1 Gbps Ethernet (50 Mbps)*		1,920.00	1.00
1 Gbps Ethernet (150 Mbps)*		2,790.00	1.00
1 Gbps Ethernet (300 Mbps)*		3,660.00	1.00
1 Gbps Ethernet (450 Mbps)*		4,530.00	1.00
1 Gbps Ethernet (600 Mbps)	5,400.00	1.00	
1 Gbps Ethernet (Full Rate)*	7,560.00	1.00	
1 Gbps Fibre Channel (Full Rate)*	8,320.00	1.00	
1 Gbps FICON (Full Rate)*	8,320.00	1.00	
(Mapped to SONET at one end)			
10 Mbps Ethernet (Full Rate) to STS1	1,200.00	1.00	
100 Mbps Ethernet (50 Mbps) to STS1*	1,920.00	1.00	
100 Mbps Ethernet (Full Rate) to OC3c	2,630.00	1.00	
1 Gbps Ethernet (50 Mbps) to OC3*	1,920.00	1.00	
1 Gbps Ethernet (150 Mbps) to OC3*	2,790.00	1.00	
1 Gbps Ethernet (300 Mbps) to OC12*	3,660.00	1.00	
1 Gbps Ethernet (450 Mbps) to OC12*	4,530.00	1.00	
1 Gbps Ethernet (600 Mbps) to OC12*	5,400.00	1.00	
1 Gbps Ethernet (600 Mbps) to OC12c	5,400.00	1.00	
1 Gbps Ethernet (Full Rate) to OC48*	7,560.00	1.00	
1 Gbps Fibre Channel (Full Rate) to OC48*	8,320.00	1.00	
1 Gbps FICON (Full Rate) to OC48*	8,320.00	1.00	

Service availability limited. Refer to # footnote on Page 20-192.

© 2022 Frontier Communications Parent, Inc. All rights reserved.

ACCESS SERVICE

20. **Ethernet Private Line** (Cont'd)

20.3 **Ethernet Private Line #**(Cont'd)

(H) Rates and Charges (Cont'd)

(1) On-Net Channel Extensions, per channel extension (Cont'd)

(a) **Protected** Channel Extensions (Cont'd)

(Jurisdiction: Arizona, California, Illinois, Indiana, Nevada, and North Carolina) (C)

(2) 3-year Commitment Period/Term Plan

Interface Type	Monthly Rate	Nonrecurring Charge
10 Mbps Ethernet (Full Rate)	$ 900.00	$1.00
100 Mbps Ethernet (50 Mbps)*	1,470.00	1.00
100 Mbps Ethernet (Full Rate)	2,030.00	1.00
1 Gbps Ethernet (50 Mbps)*	1,470.00	1.00
1 Gbps Ethernet (150 Mbps)*	2,310.00	1.00
1 Gbps Ethernet (300 Mbps)*	3,140.00	1.00
1 Gbps Ethernet (450 Mbps)*	3,970.00	1.00
1 Gbps Ethernet (600 Mbps)	4,800.00	1.00
1 Gbps Ethernet (Full Rate)*	6,720.00	1.00
1 Gbps Fibre Channel (Full Rate)*	7,400.00	1.00
1 Gbps FICON (Full Rate)*	7,400.00	1.00
(Mapped to SONET at one end)		
10 Mbps Ethernet (Full Rate) to STS1	900.00	1.00
100 Mbps Ethernet (50 Mbps) to STS1*	1,470.00	1.00
100 Mbps Ethernet (Full Rate) to OC3c	2,030.00	1.00
1 Gbps Ethernet (50 Mbps) to OC3*	1,470.00	1.00
1 Gbps Ethernet (150 Mbps) to OC3*	2,310.00	1.00
1 Gbps Ethernet (300 Mbps) to OC12*	3,140.00	1.00
1 Gbps Ethernet (450 Mbps) to OC12*	3,970.00	1.00
1 Gbps Ethernet (600 Mbps) to OC12	4,800.00	1.00
1 Gbps Ethernet (600 Mbps) to OC12c	4,800.00	1.00
1 Gbps Ethernet (Full Rate) to OC48*	6,720.00	1.00
1 Gbps Fibre Channel (Full Rate) to OC48*	7,400.00	1.00
1 Gbps FICON (Full Rate) to OC48*	7,400.00	1.00

Service availability limited. Refer to # footnote on Page 20-192.

© 2022 Frontier Communications Parent, Inc. All rights reserved.

ACCESS SERVICE

20. **Ethernet Private Line** (Cont'd)

20.3 **Ethernet Private Line #** (Cont'd)

(H) Rates and Charges (Cont'd)

(1) On-Net Channel Extensions, per channel extension (Cont'd)

(a) **Protected** Channel Extensions (Cont'd)

(Jurisdiction: Arizona, California, Illinois, Indiana, Nevada and North Carolina) (C)

(3) 5-year Commitment Period/Term Plan

Interface Type	Monthly Rate	Nonrecurring Charge
10 Mbps Ethernet (Full Rate)	$ 720.00	$1.00
100 Mbps Ethernet (50 Mbps)	1,200.00	1.00
100 Mbps Ethernet (Full Rate)	1,680.00	1.00
1 Gbps Ethernet (50 Mbps)	1,200.00	1.00
1 Gbps Ethernet (150 Mbps)	2,000.00	1.00
1 Gbps Ethernet (300 Mbps)	2,790.00	1.00
1 Gbps Ethernet (450 Mbps)	3,590.00	1.00
1 Gbps Ethernet (600 Mbps)	4,380.00	1.00
1 Gbps Ethernet (Full Rate)	6,140.00	1.00
1 Gbps Fibre Channel (Full Rate)	6,760.00	1.00
1 Gbps FICON (Full Rate)	6,760.00	1.00
(Mapped to SONET at one end)		
10 Mbps Ethernet (Full Rate) to STS1	720.00	1.00
100 Mbps Ethernet (50 Mbps) to STS1	1,200.00	1.00
100 Mbps Ethernet (Full Rate) to OC3c	1,680.00	1.00
1 Gbps Ethernet (50 Mbps) to OC3	1,200.00	1.00
1 Gbps Ethernet (150 Mbps) to OC3	2,000.00	1.00
1 Gbps Ethernet (300 Mbps) to OC12	2,790.00	1.00
1 Gbps Ethernet (450 Mbps) to OC12	3,590.00	1.00
1 Gbps Ethernet (600 Mbps) to OC12	4,380.00	1.00
1 Gbps Ethernet (600 Mbps) to OC12c	4,380.00	1.00
1 Gbps Ethernet (Full Rate) to OC48	6,140.00	1.00
1 Gbps Fibre Channel (Full Rate) to OC48	6,760.00	1.00
1 Gbps FICON (Full Rate) to OC48	6,760.00	1.00

Service availability limited. Refer to # footnote on Page 20-192.

© 2022 Frontier Communications Parent, Inc. All rights reserved.

ACCESS SERVICE

20. **Ethernet Private Line** (Cont'd)

20.3 **Ethernet Private Line #**(Cont'd)

(H) Rates and Charges (Cont'd)

(1) On-Net Channel Extensions, per channel extension (Cont'd)

(a) **Protected** Channel Extensions (Cont'd)

(Jurisdiction: Arizona, California, Illinois, Indiana, Nevada and North Carolina) (C)

7-year Commitment Period/Term Plan

(4)

Interface Type	Monthly Rate	Nonrecurring Charge
10 Mbps Ethernet (Full Rate)	$ 600.00	$1.00
100 Mbps Ethernet (50 Mbps)*	1,020.00	1.00
100 Mbps Ethernet (Full Rate)	1,430.00	1.00
1 Gbps Ethernet (50 Mbps)*	1,020.00	1.00
1 Gbps Ethernet (150 Mbps)*	1,840.00	1.00
1 Gbps Ethernet (300 Mbps)*	2,660.00	1.00
1 Gbps Ethernet (450 Mbps)*	3,480.00	1.00
1 Gbps Ethernet (600 Mbps)	4,300.00	1.00
1 Gbps Ethernet (Full Rate)*	6,020.00	1.00
1 Gbps Fibre Channel (Full Rate)*	6,630.00	1.00
1 Gbps FICON (Full Rate)*	6,630.00	1.00
(Mapped to SONET at one end)		
10 Mbps Ethernet (Full Rate) to STS1	600.00	1.00
100 Mbps Ethernet (50 Mbps) to STS1*	1,020.00	1.00
100 Mbps Ethernet (Full Rate) to OC3c	1,430.00	1.00
1 Gbps Ethernet (50 Mbps) to OC3*	1,020.00	1.00
1 Gbps Ethernet (150 Mbps) to OC3*	1,840.00	1.00
1 Gbps Ethernet (300 Mbps) to OC12*	2,660.00	1.00
1 Gbps Ethernet (450 Mbps) to OC12*	3,480.00	1.00
1 Gbps Ethernet (600 Mbps) to OC12*	4,300.00	1.00
1 Gbps Ethernet (600 Mbps) to OC12c	4,300.00	1.00
1 Gbps Ethernet (Full Rate) to OC48*	6,020.00	1.00
1 Gbps Fibre Channel (Full Rate) to OC48*	6,630.00	1.00
1 Gbps FICON (Full Rate) to OC48*	6,630.00	1.00

Service availability limited. Refer to # footnote on Page 20-192.

© 2022 Frontier Communications Parent, Inc. All rights reserved.

ACCESS SERVICE

20. **Ethernet Private Line** (Cont'd)

20.3 **Ethernet Private Line #**(Cont'd)

(H) Rates and Charges

(1) On-Net Channel Extensions, per channel extension

(b) **Unprotected** Channel Extensions

(Jurisdiction: Arizona, California, Illinois, Indiana, Nevada and North Carolina) (C)

(1) 1-year Commitment Period/Term Plan

Interface Type	Monthly Rate	Nonrecurring Charge
10 Mbps Ethernet (Full Rate)	$ 900.00	$1.00
100 Mbps Ethernet (50 Mbps)*	1,470.00	1.00
100 Mbps Ethernet (Full Rate)	2,030.00	1.00
1 Gbps Ethernet (50 Mbps)*	1,470.00	1.00
1 Gbps Ethernet (150 Mbps)*	2,160.00	1.00
1 Gbps Ethernet (300 Mbps)*	2,840.00	1.00
1 Gbps Ethernet (450 Mbps)*	3,520.00	1.00
1 Gbps Ethernet (600 Mbps)	4,200.00	1.00
1 Gbps Ethernet (Full Rate)*	5,880.00	1.00
1 Gbps Fibre Channel (Full Rate)*	6,470.00	1.00
1 Gbps FICON (Full Rate)*	6,470.00	1.00
(Mapped to SONET at one end)		
10 Mbps Ethernet (Full Rate) to STS1	900.00	1.00
100 Mbps Ethernet (50 Mbps) to STS1*	1,470.00	1.00
100 Mbps Ethernet (Full Rate) to OC3c	2,030.00	1.00
1 Gbps Ethernet (50 Mbps) to OC3*	1,470.00	1.00
1 Gbps Ethernet (150 Mbps) to OC3*	2,160.00	1.00
1 Gbps Ethernet (300 Mbps) to OC12*	2,840.00	1.00
1 Gbps Ethernet (450 Mbps) to OC12*	3,520.00	1.00
1 Gbps Ethernet (600 Mbps) to OC12*	4,200.00	1.00
1 Gbps Ethernet (600 Mbps) to OC12c	4,200.00	1.00
1 Gbps Ethernet (Full Rate) to OC48*	5,880.00	1.00
1 Gbps Fibre Channel (Full Rate) to OC48*	6,470.00	1.00
1 Gbps FICON (Full Rate) to OC48*	6,470.00	1.00

Service availability limited. Refer to # footnote on Page 20-192.

© 2022 Frontier Communications Parent, Inc. All rights reserved.

ACCESS SERVICE

20. **Ethernet Private Line** (Cont'd)

20.3 **Ethernet Private Line #**(Cont'd)

(H) Rates and Charges (Cont'd)

(1) On-Net Channel Extensions, per channel extension (Cont'd)

(b) **Unprotected** Channel Extensions (Cont'd)

(Jurisdiction: Arizona, California, Illinois, Indiana, Nevada and North Carolina) (C)

(2) 3-year Commitment Period/Term Plan

Interface Type	Monthly Rate	Nonrecurring Charge
10 Mbps Ethernet (Full Rate)	$ 740.00	$1.00
100 Mbps Ethernet (50 Mbps)*	1,180.00	1.00
100 Mbps Ethernet (Full Rate)	1,620.00	1.00
1 Gbps Ethernet (50 Mbps)*	1,180.00	1.00
1 Gbps Ethernet (150 Mbps)*	1,840.00	1.00
1 Gbps Ethernet (300 Mbps)*	2,490.00	1.00
1 Gbps Ethernet (450 Mbps)*	3,150.00	1.00
1 Gbps Ethernet (600 Mbps)	3,800.00	1.00
1 Gbps Ethernet (Full Rate)*	5,320.00	1.00
1 Gbps Fibre Channel (Full Rate)*	5,860.00	1.00
1 Gbps FICON (Full Rate)*	5,860.00	1.00
(Mapped to SONET at one end)		
10 Mbps Ethernet (Full Rate) to STS1	740.00	1.00
100 Mbps Ethernet (50 Mbps) to STS1*	1,180.00	1.00
100 Mbps Ethernet (Full Rate) to OC3c	1,620.00	1.00
1 Gbps Ethernet (50 Mbps) to OC3*	1,180.00	1.00
1 Gbps Ethernet (150 Mbps) to OC3*	1,840.00	1.00
1 Gbps Ethernet (300 Mbps) to OC12*	2,490.00	1.00
1 Gbps Ethernet (450 Mbps) to OC12*	3,150.00	1.00
1 Gbps Ethernet (600 Mbps) to OC12*	3,800.00	1.00
1 Gbps Ethernet (600 Mbps) to OC12c	3,800.00	1.00
1 Gbps Ethernet (Full Rate) to OC48*	5,320.00	1.00
1 Gbps Fibre Channel (Full Rate) to OC48*	5,860.00	1.00
1 Gbps FICON (Full Rate) to OC48*	5,860.00	1.00

Service availability limited. Refer to # footnote on Page 20-192.

© 2022 Frontier Communications Parent, Inc. All rights reserved.

ACCESS SERVICE

20. **Ethernet Private Line** (Cont'd)

20.3 **Ethernet Private Line #**(Cont'd)

(H) Rates and Charges (Cont'd)

(1) On-Net Channel Extensions, per channel extension (Cont'd)

(b) **Unprotected** Channel Extensions (Cont'd)

(Jurisdiction: Arizona, California, Illinois, Indiana, Nevada and North Carolina) (C)

(3) 5-year Commitment Period/Term Plan

Interface Type	Monthly Rate	Nonrecurring Charge
10 Mbps Ethernet (Full Rate)	$ 590.00	$1.00
100 Mbps Ethernet (50 Mbps)*	960.00	1.00
100 Mbps Ethernet (Full Rate)	1,320.00	1.00
1 Gbps Ethernet (50 Mbps)*	960.00	1.00
1 Gbps Ethernet (150 Mbps)*	1,600.00	1.00
1 Gbps Ethernet (300 Mbps)*	2,230.00	1.00
1 Gbps Ethernet (450 Mbps)*	2,860.00	1.00
1 Gbps Ethernet (600 Mbps)	3,490.00	1.00
1 Gbps Ethernet (Full Rate)*	4,890.00	1.00
1 Gbps Fibre Channel (Full Rate)*	5,380.00	1.00
1 Gbps FICON (Full Rate)*	5,380.00	1.00
(Mapped to SONET at one end)		
10 Mbps Ethernet (Full Rate) to STS1	590.00	1.00
100 Mbps Ethernet (50 Mbps) to STS1*	960.00	1.00
100 Mbps Ethernet (Full Rate) to OC3c	1,320.00	1.00
1 Gbps Ethernet (50 Mbps) to OC3*	960.00	1.00
1 Gbps Ethernet (150 Mbps) to OC3*	1,600.00	1.00
1 Gbps Ethernet (300 Mbps) to OC12*	2,230.00	1.00
1 Gbps Ethernet (450 Mbps) to OC12*	2,860.00	1.00
1 Gbps Ethernet (600 Mbps) to OC12*	3,490.00	1.00
1 Gbps Ethernet (600 Mbps) to OC12c	3,490.00	1.00
1 Gbps Ethernet (Full Rate) to OC48*	4,890.00	1.00
1 Gbps Fibre Channel (Full Rate) to OC48*	5,380.00	1.00
1 Gbps FICON (Full Rate) to OC48*	5,380.00	1.00

Service availability limited. Refer to # footnote on Page 20-192.

© 2022 Frontier Communications Parent, Inc. All rights reserved.

ACCESS SERVICE

20. **Ethernet Private Line** (Cont'd)

20.3 **Ethernet Private Line #**(Cont'd)

(H) Rates and Charges (Cont'd)

(1) On-Net Channel Extensions, per channel extension (Cont'd)

(b) **Unprotected** Channel Extensions (Cont'd)

(Jurisdiction: Arizona, California, Illinois, Indiana, Nevada and North Carolina) (C)

7-year Commitment Period/Term Plan

(4)

Interface Type	Monthly Rate	Nonrecurring Charge
10 Mbps Ethernet (Full Rate)	$ 480.00	$1.00
100 Mbps Ethernet (50 Mbps)*	790.00	1.00
100 Mbps Ethernet (Full Rate)	1,100.00	1.00
1 Gbps Ethernet (50 Mbps)*	790.00	1.00
1 Gbps Ethernet (150 Mbps)*	1,450.00	1.00
1 Gbps Ethernet (300 Mbps)*	2,100.00	1.00
1 Gbps Ethernet (450 Mbps)*	2,750.00	1.00
1 Gbps Ethernet (600 Mbps)	3,400.00	1.00
1 Gbps Ethernet (Full Rate)*	4,760.00	1.00
1 Gbps Fibre Channel (Full Rate)*	5,240.00	1.00
1 Gbps FICON (Full Rate)*	5,240.00	1.00
(Mapped to SONET at one end)		
10 Mbps Ethernet (Full Rate) to STS1	480.00	1.00
100 Mbps Ethernet (50 Mbps) to STS1*	790.00	1.00
100 Mbps Ethernet (Full Rate) to OC3c	1,100.00	1.00
1 Gbps Ethernet (50 Mbps) to OC3*	790.00	1.00
1 Gbps Ethernet (150 Mbps) to OC3*	1,450.00	1.00
1 Gbps Ethernet (300 Mbps) to OC12*	2,100.00	1.00
1 Gbps Ethernet (450 Mbps) to OC12*	2,750.00	1.00
1 Gbps Ethernet (600 Mbps) to OC12*	3,400.00	1.00
1 Gbps Ethernet (600 Mbps) to OC12c	3,400.00	1.00
1 Gbps Ethernet (Full Rate) to OC48*	4,760.00	1.00
1 Gbps Fibre Channel (Full Rate) to OC48*	5,240.00	1.00
1 Gbps FICON (Full Rate) to OC48*	5,240.00	1.00

Service availability limited. Refer to # footnote on Page 20-192.

© 2022 Frontier Communications Parent, Inc. All rights reserved.

ACCESS SERVICE

20. **Ethernet Private Line** (Cont'd)

20.3 **Ethernet Private Line #** (Cont'd)

(H) Rates and Charges (Cont'd)

(2) On-Net Channel Mileage

(a) **Protected** Channel Mileage

(Jurisdiction: Arizona, California, Illinois, Indiana, Nevada and North Carolina) (C)

(1) 1-year Commitment Period/Term Plan

Interface Type	Monthly Rate Per Mile	Monthly Rate Fixed
10 Mbps Ethernet (Full Rate)	$ 96.00	$ 180.00
100 Mbps Ethernet (50 Mbps)*	120.00	280.00
100 Mbps Ethernet (Full Rate)	143.00	375.00
1 Gbps Ethernet (50 Mbps)*	120.00	280.00
1 Gbps Ethernet (150 Mbps)*	155.00	410.00
1 Gbps Ethernet (300 Mbps)*	190.00	540.00
1 Gbps Ethernet (450 Mbps)*	225.00	670.00
1 Gbps Ethernet (600 Mbps)	260.00	800.00
1 Gbps Ethernet (Full Rate)*	364.00	1,120.00
1 Gbps Fibre Channel (Full Rate)*	401.00	1,235.00
1 Gbps FICON (Full Rate)*	401.00	1,235.00
(Mapped to SONET at One End)		
10 Mbps Ethernet (Full Rate) to STS1	96.00	180.00
100 Mbps Ethernet (50 Mbps) to STS1*	120.00	280.00
100 Mbps Ethernet (Full Rate) to OC3c	143.00	375.00
1 Gbps Ethernet (50 Mbps) to OC3*	120.00	280.00
1 Gbps Ethernet (150 Mbps) to OC3*	155.00	410.00
1 Gbps Ethernet (300 Mbps) to OC12*	190.00	540.00
1 Gbps Ethernet (450 Mbps) to OC12*	225.00	670.00
1 Gbps Ethernet (600 Mbps) to OC 12*	260.00	800.00
1 Gbps Ethernet (600 Mbps) to OC12c	260.00	800.00
1 Gbps Ethernet (Full Rate) to OC48*	364.00	1,120.00
1 Gbps Fibre Channel (Full Rate) to OC48*	401.00	1,235.00
1 Gbps FICON (Full Rate) to OC48*	401.00	1,235.00

Service availability limited. Refer to # footnote on Page 20-192.

© 2022 Frontier Communications Parent, Inc. All rights reserved.

ACCESS SERVICE

20. **Ethernet Private Line** (Cont'd)

20.3 **Ethernet Private Line #** (Cont'd)

(H) Rates and Charges (Cont'd)

(2) On-Net Channel Mileage (Cont'd)

(a) **Protected** Channel Mileage (Cont'd)

(Jurisdiction: Arizona, California, Illinois, Indiana, Nevada and North Carolina) (C)

3-year Commitment Period/Term Plan

(2)

Interface Type	Monthly Rate Per Mile	Monthly Rate Fixed
10 Mbps Ethernet (Full Rate)	$ 74.00	$ 135.00
100 Mbps Ethernet (50 Mbps)*	91.00	220.00
100 Mbps Ethernet (Full Rate)	108.00	305.00
1 Gbps Ethernet (50 Mbps)*	91.00	220.00
1 Gbps Ethernet (150 Mbps)*	126.00	340.00
1 Gbps Ethernet (300 Mbps)*	161.00	460.00
1 Gbps Ethernet (450 Mbps)*	196.00	580.00
1 Gbps Ethernet (600 Mbps)	230.00	700.00
1 Gbps Ethernet (Full Rate)*	322.00	980.00
1 Gbps Fibre Channel (Full Rate)*	355.00	1,080.00
1 Gbps FICON (Full Rate)*	355.00	1,080.00
(Mapped to SONET at One End)		
10 Mbps Ethernet (Full Rate) to STS1	74.00	135.00
100 Mbps Ethernet (50 Mbps) to STS1*	91.00	220.00
100 Mbps Ethernet (Full Rate) to OC3c	108.00	305.00
1 Gbps Ethernet (50 Mbps) to OC3*	91.00	220.00
1 Gbps Ethernet (150 Mbps) to OC3*	126.00	340.00
1 Gbps Ethernet (300 Mbps) to OC12*	161.00	460.00
1 Gbps Ethernet (450 Mbps) to OC12*	196.00	580.00
1 Gbps Ethernet (600 Mbps) to OC 12*	230.00	700.00
1 Gbps Ethernet (600 Mbps) to OC12c	230.00	700.00
1 Gbps Ethernet (Full Rate) to OC48*	322.00	980.00
1 Gbps Fibre Channel (Full Rate) to OC48*	355.00	1,080.00
1 Gbps FICON (Full Rate) to OC48*	355.00	1,080.00

Service availability limited. Refer to # footnote on Page 20-192.

© 2022 Frontier Communications Parent, Inc. All rights reserved.

ACCESS SERVICE

20. **Ethernet Private Line** (Cont'd)

20.3 **Ethernet Private Line #**(Cont'd)

(H) Rates and Charges (Cont'd)

(2) On-Net Channel Mileage (Cont'd)

(a) **Protected** Channel Mileage (Cont'd)

(Jurisdiction: Arizona, California, Illinois, Indiana, Nevada, and North Carolina) (C)

5-year Commitment Period/Term Plan

(3)

Interface Type	Monthly Rate Per Mile	Monthly Rate Fixed
10 Mbps Ethernet (Full Rate)	$ 63.00	$ 90.00
100 Mbps Ethernet (50 Mbps)*	77.00	165.00
100 Mbps Ethernet (Full Rate)	90.00	240.00
1 Gbps Ethernet (50 Mbps)*	77.00	165.00
1 Gbps Ethernet (150 Mbps)*	113.00	290.00
1 Gbps Ethernet (300 Mbps)*	148.00	410.00
1 Gbps Ethernet (450 Mbps)*	184.00	530.00
1 Gbps Ethernet (600 Mbps)	219.00	650.00
1 Gbps Ethernet (Full Rate)*	307.00	910.00
1 Gbps Fibre Channel (Full Rate)*	338.00	1,005.00
1 Gbps FICON (Full Rate)*	338.00	1,005.00
(Mapped to SONET at One End)		
10 Mbps Ethernet (Full Rate) to STS1	63.00	90.00
100 Mbps Ethernet (50 Mbps) to STS1*	77.00	165.00
100 Mbps Ethernet (Full Rate) to OC3c	90.00	240.00
1 Gbps Ethernet (50 Mbps) to OC3*	77.00	165.00
1 Gbps Ethernet (150 Mbps) to OC3*	113.00	290.00
1 Gbps Ethernet (300 Mbps) to OC12*	148.00	410.00
1 Gbps Ethernet (450 Mbps) to OC12*	184.00	530.00
1 Gbps Ethernet (600 Mbps) to OC 12*	219.00	650.00
1 Gbps Ethernet (600 Mbps) to OC12c	219.00	650.00
1 Gbps Ethernet (Full Rate) to OC48*	307.00	910.00
1 Gbps Fibre Channel (Full Rate) to OC48*	338.00	1,005.00
1 Gbps FICON (Full Rate) to OC48*	338.00	1,005.00

Service availability limited. Refer to # footnote on Page 20-192.

© 2022 Frontier Communications Parent, Inc. All rights reserved.

ACCESS SERVICE

20. **Ethernet Private Line** (Cont'd)

20.3 **Ethernet Private Line #** (Cont'd)

(H) Rates and Charges (Cont'd)

(2) On-Net Channel Mileage (Cont'd)

(a) **Protected** Channel Mileage (Cont'd)

(Jurisdiction: Arizona, California, Illinois, Indiana, Nevada, and North Carolina) (C)

7-year Commitment Period/Term Plan

(4)

Interface Type	Monthly Rate Per Mile	Monthly Rate Fixed
10 Mbps Ethernet (Full Rate)	$ 48.00	$ 80.00
100 Mbps Ethernet (50 Mbps)	63.00	150.00
100 Mbps Ethernet (Full Rate)	77.00	220.00
1 Gbps Ethernet (50 Mbps)	63.00	150.00
1 Gbps Ethernet (150 Mbps)	100.00	275.00
1 Gbps Ethernet (300 Mbps)	137.00	400.00
1 Gbps Ethernet (450 Mbps)	174.00	525.00
1 Gbps Ethernet (600 Mbps)	210.00	650.00
1 Gbps Ethernet (Full Rate)	294.00	910.00
1 Gbps Fibre Channel (Full Rate)	324.00	1,005.00
1 Gbps FICON (Full Rate)	324.00	1,005.00
(Mapped to SONET at One End)		
10 Mbps Ethernet (Full Rate) to STS1	48.00	80.00
100 Mbps Ethernet (50 Mbps) to STS1	63.00	150.00
100 Mbps Ethernet (Full Rate) to OC3c	77.00	220.00
1 Gbps Ethernet (50 Mbps) to OC3	63.00	150.00
1 Gbps Ethernet (150 Mbps) to OC3	100.00	275.00
1 Gbps Ethernet (300 Mbps) to OC12	137.00	400.00
1 Gbps Ethernet (450 Mbps) to OC12	174.00	525.00
1 Gbps Ethernet (600 Mbps) to OC 12	210.00	650.00
1 Gbps Ethernet (600 Mbps) to OC12c	210.00	650.00
1 Gbps Ethernet (Full Rate) to OC48	294.00	910.00
1 Gbps Fibre Channel (Full Rate) to OC48	324.00	1,005.00
1 Gbps FICON (Full Rate) to OC48	324.00	1,005.00

Service availability limited. Refer to # footnote on Page 20-192.

© 2022 Frontier Communications Parent, Inc. All rights reserved.

ACCESS SERVICE

20. **Ethernet Private Line** (Cont'd)

20.3 **Ethernet Private Line #** (Cont'd)

(H) Rates and Charges (Cont'd)

(3) Access Aggregation Ports, Per Port

(Jurisdiction: Arizona, California, Illinois, Indiana, Nevada and North Carolina) (C)

	Interface Type	Monthly Rate	Nonrecurring Charge
	1-year Commitment Period/Term Plan		
(a)			
	OC3 (Supports Up to 3 Mapped STS1s)	$ 50.00	$1.00
	OC12 (Supports Up to 12 Mapped STS1s)	100.00	1.00
	OC48 (Supports Up to 48 Mapped STS1s)	300.00	1.00
	3-year Commitment Period/Term Plan		
(b)			
	OC3 (Supports Up to 3 Mapped STS1s)	50.00	1.00
	OC12 (Supports Up to 12 Mapped STS1s)	100.00	1.00
	OC48 (Supports Up to 48 Mapped STS1s)	300.00	1.00
	5-year Commitment Period/Term Plan		
(c)			
	OC3 (Supports Up to 3 Mapped STS1s)	50.00	1.00
	OC12 (Supports Up to 12 Mapped STS1s)	100.00	1.00
	OC48 (Supports Up to 48 Mapped STS1s)	300.00	1.00
	7-year Commitment Period/Term Plan		
(d)			
	OC3 (Supports Up to 3 Mapped STS1s)	50.00	1.00
	OC12 (Supports Up to 12 Mapped STS1s)	100.00	1.00
	OC48 (Supports Up to 48 Mapped STS1s)	300.00	1.00

Service availability limited. Refer to # footnote on Page 20-192.

© 2022 Frontier Communications Parent, Inc. All rights reserved.

ACCESS SERVICE

20. Ethernet Private Line (Cont'd)

20.4 Dedicated SONET Entrance Facilities

(A) General

Dedicated SONET Entrance Facilities (DSEF) provides high capacity DS3s with enhanced survivability between a Customer Designated Location (CDL) and the Serving Wire Center (SWC) of that CDL. DSEF is provisioned over the Telephone Company's shared SONET network that includes a self-healing ring that passes through the CDL, the SWC of that CDL, and another wire center as determined by the Telephone Company.

(B) DSEF Components

(1) DSEF consists of two basic service components:

- DSEF Terminations
- DSEF Interfaces

(a) DSEF Terminations

DSEF Terminations provide STS1 bandwidth between the CDL and the SWC of that CDL. The DSEF Terminations carry DS3 services and are delivered with enhanced survivability over the Telephone Company's self-healing SONET network. As a result, the Customer is assured continuity of communication for the DS3 service even if there is a fiber facility failure between the CDL and the SWC of that CDL.

(b) DSEF Interfaces

The DSEF Interface defines the engineering characteristics of the service hand-off at the CDL. The Customer must specify an electrical or optical interface for each DSEF Termination.

(i) Electrical Interface

The electrical DSEF Interface defines the type of service that is to be provided over the Telephone Company provided SONET network. The electrical interface type that is available is DS3 (44.736 Mbps).

The electrical DSEF Interface is used for connecting a DS3 service to a DSEF Termination at the CDL.

(ii) Optical Interface

The optical DSEF Interface defines the optical handoff at the CDL. The optical interface is used for DS3 services connecting to DSEF Terminations and being mapped to an optical interface at OC3, OC12, or OC48 bandwidth. For example, Customer has the option of connecting multiple DS3 services to DSEF Terminations and mapping multiple DS3 services to a single OC3 optical interface.

© 2022 Frontier Communications Parent, Inc. All rights reserved.

ACCESS SERVICE

20. Ethernet Private Line (Cont'd)

20.4 Dedicated SONET Entrance Facilities (Cont'd)

(B) DSEF Components (Cont'd)

(2) A network diagram of a DSEF with DS3 electrical interface and OC3 and OC12 optical interfaces is illustrated below:

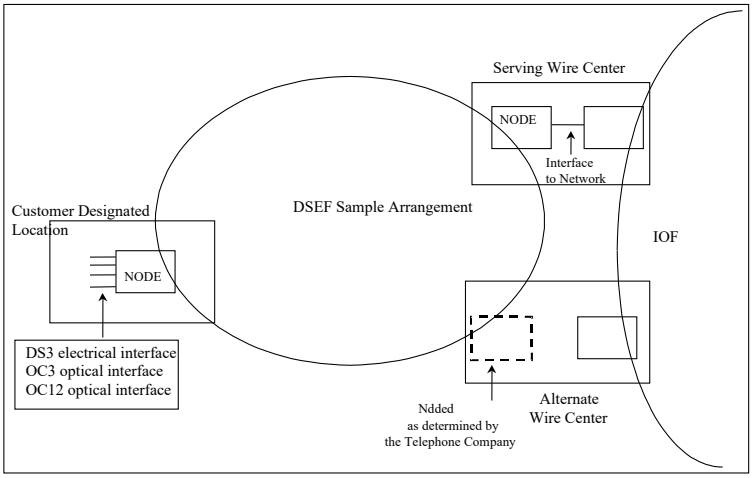

(3) A network diagram of the DSEF with an OC48 optical interface is illustrated below:

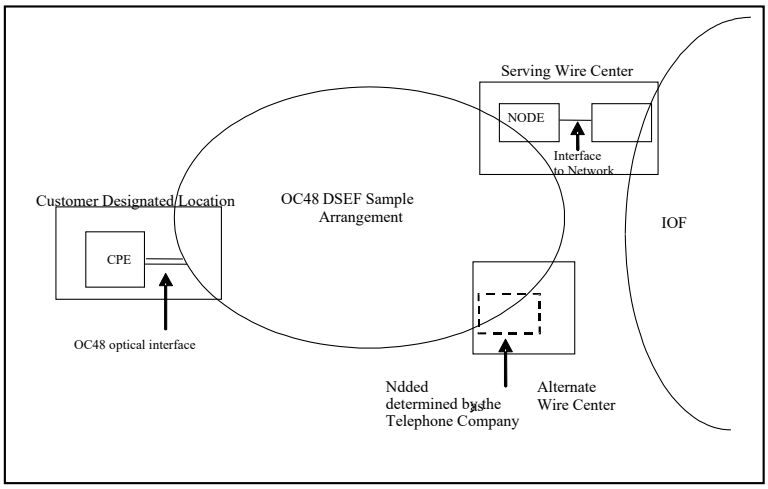

(C) Technical Specifications

Technical specifications for DSEF are set forth in Technical Reference GR-253-CORE, Issue 4.

© 2022 Frontier Communications Parent, Inc. All rights reserved.

ACCESS SERVICE

20. Ethernet Private Line (Cont'd)

20.4 Dedicated SONET Entrance Facilities (Cont'd)

(D) Terms and Conditions

(1) Deployment and Availability

(a) DSEF is provided where SONET facilities and bandwidth are available to provide the requested DSEF Interface. The Telephone Company will work cooperatively with the Customer in determining the availability of such facilities and if service can be provided.

(b) DSEF is available based on negotiated intervals, as described in Section 5.1.7 preceding.

(c) Regulations for moves or rearrangements of DS3s are described in Section 7.2.1 preceding.

(2) Service Limitations

If the CDL is located in the same building as the SWC, the diversity between the SWC and the CDL may be limited by the physical paths available to connect the SWC and the CDL, and there may not be fiber diversity routed through an alternate wire center.

(3) Connection to Other Services

(a) Connection of DS3 Services to DSEF Terminations is provided by the Telephone Company. Interoffice mileage, when applicable, will apply at Circuit Mileage rates, as set forth in Section 7.11.5 preceding, for the appropriate DS3 service being transported over the interoffice facilities

Asynchronous multiplexing of DS1s into a DS3 occurs outside the DSEF and all terms and rates as set forth in Section 7.11 preceding are applicable for such multiplexing.

(b) DSEF may also be connected to the following Telephone Company provided services, where such connections are technically and operationally feasible, as determined by the Telephone Company.

- ethernet private line service
- point-to-point SONET service

(4) Space and Power

The Customer will be billed additional charges for any charges levied on the Telephone Company for space and power required to place equipment on the Telephone Company's side of the network interface.

(5) Conversions

Customers who wish to convert existing DS1 and lower bandwidth special access services to a DSEF may do so without termination liability as long as the total capacity of converted services at the CDL does not decrease. A new commitment period commences with the conversion and no credit is given for time-in-service on the new term plan. Applicable nonrecurring charges for installations will apply.

© 2022 Frontier Communications Parent, Inc. All rights reserved.

ACCESS SERVICE

20. Ethernet Private Line (Cont'd)

20.4 Dedicated SONET Entrance Facilities (Cont'd)

(E) Application of Rates and Charges

(1) Rate Structure

(a) DSEF Terminations

Monthly recurring charges (MRCs) apply for DSEF Terminations. The MRCs are differentiated by the term plan and DSEF Interface selected by the Customer. Nonrecurring charges apply for installations of DSEF Terminations.

Additionally, the MRCs for DSEF Terminations apply on a tapered schedule basis as set forth in (F) following. The rate to be billed for each DSEF Termination is based on the total number of DSEF Terminations that are in-service as of each billing date, on a per CDL basis, and per Billing Account Number (BAN) basis. To determine the total number of DSEF Terminations, the Telephone Company will count all DSEF Terminations and Telephone Company provided SONET entrance facilities provided in connection with a Telephone Company provided point-to-point SONET service or ethernet private line service that terminate at such CDL that are in service and billed under the same BAN.

For example, a Customer purchases five (5) DSEFs that are in-service at three (3) different CDLs, with the 5 DSEFs being billed under two (2) different BANs.

(i) The first CDL has two (2) DSEFs, one with fifteen (15) in-service STS1 DSEF Terminations and the other with 5 in-service STS1 DSEF Terminations for a total of twenty (20) STS1 DSEF Terminations. Both DSEFs are under the same BAN. The rate to be billed for each DSEF Termination in the 2 DSEFs at the first CDL is the rate shown for 20 STS1 DSEF Terminations, as set forth in (F) following.

(ii) The second CDL has two (2) DSEFs, one with twenty (20) in-service STS1 DSEF Terminations and the other with twenty-two (22) in-service STS1 DSEF Terminations, for a total of forty-two (42) STS1 DSEF Terminations. The DSEFs at the second CDL are under separate BANs. The rate to be billed for each DSEF Termination in the first DSEF is the rate shown for 20 STS1 DSEF Terminations. The rate to be billed for each DSEF Termination in the second DSEF is the rate shown for 22 STS1 DSEF Terminations, as set forth in (F) following.

(iii) The third CDL has one (1) DSEF with nine (9) in-service STS1 DSEF Terminations on the same BAN. The rate to be billed for each DSEF Termination on the DSEF is the rate shown for 9 STS1 DSEF Terminations, as set forth in (F) following.

(b) DSEF Interfaces

MRCs for electrical DSEF Interfaces shall apply as set forth in (F)(2) following. When a customer orders a DSEF with a STS1 termination and an electrical interface, both the MRC for electrical DSEF interface (as set forth in (F)(2) following), and the MRC for STS1 Termination (as set forth in (F)(1) following) shall apply. The MRCs are differentiated by the term plan selected by the Customer. Nonrecurring charges apply for installations of electrical DSEF Interfaces, as set forth in (F)(3) following.

© 2022 Frontier Communications Parent, Inc. All rights reserved.

ACCESS SERVICE

20. Ethernet Private Line (Cont'd)

20.4 Dedicated SONET Entrance Facilities (Cont'd)

(E) Application of Rates and Charges

(2) Term Plans

DSEF is available for term plans of three (3) year and five (5) year commitment periods.

(3) Connection to Other Services

When a Customer connects a DSEF Termination to a DS3 service under a one (1) year commitment period, the DSEF Termination and Interface will be provided under a three (3) year commitment period.

When a Customer connects a DSEF Termination to a DS3 service under a three (3) year or five (5) year commitment period, the DSEF Termination and Interface will be provided under the same length commitment period.

When a Customer connects a DSEF Termination to a DS3 service under a seven (7) year commitment period, the DSEF Termination and Interface will be provided under a five (5) year commitment period.

(4) Expiration of Commitment Period

Upon expiration of the term plan, the Telephone Company will continue to provide DSEF on a month-to-month basis under the same rates, terms and conditions of the current term plan until the earliest to occur of: (a) the Customer cancels service or (b) a valid order for a new term plan is requested by the Customer.

(5) Termination Liability

(a) A Customer must fulfill the term plan for each DSEF Termination and Interface, or be subject to termination liability for each DSEF Termination and Interface that was not in service for the entire commitment period. If a Customer disconnects service during the first year, termination liability will be calculated at one hundred percent (100%) of the MRCs for the unexpired portion of the first year, and at fifteen percent (15%) for the remainder of the term. If the disconnection takes place after the first year, termination liability is calculated at 15% of the MRCs for the remainder of the term.

(b) Termination liability will not apply to DSEF when:

(i) Reserved for Future Use (C)

(ii) a Customer changes its term plan to a longer commitment period and the CDL does not change.

Certain material now appearing on this page formerly appeared on Page 20-335.
(y) Reissued material became effective May 11, 2007 under Transmittal No. 800.

© 2024 Frontier Communications Parent, Inc. All rights reserved.

ACCESS SERVICE

20. Ethernet Private Line (Cont'd)

20.4 Dedicated SONET Entrance Facilities (Cont'd)

(F) Rates and Charges

(1) DSEF Terminations
(Jurisdiction: Arizona, California, Illinois, Indiana, Nevada and North Carolina) (C)

Per STS1/51.84 Mbps DSEF Termination
(a) With a DS3 Electrical Interface

	Monthly Rate 3 Year Term	Monthly Rate 5 Year Term
1	$2,150.00	$1,800.00
2	2,100.00	1,600.00
3	1,700.00	1,500.00
4	1,175.00	1,100.00
5	1,000.00	890.00
6	783.00	750.00
7	699.00	640.00
8	636.00	560.00
9	588.00	500.00
10	548.00	440.00
11	516.00	395.00
12	489.00	365.00
13	480.00	362.00
14	477.00	358.00
15	475.00	355.00
16	472.00	353.00
17	470.00	350.00
18	467.00	348.00
19	465.00	345.00
20	462.00	340.00
21	459.00	338.00
22	456.00	336.00
23	454.00	333.00
24	451.00	331.00

© 2022 Frontier Communications Parent, Inc. All rights reserved.

ACCESS SERVICE

20. Ethernet Private Line (Cont'd)

20.4 Dedicated SONET Entrance Facilities (Cont'd)

(F) Rates and Charges (Cont'd)

(1) DSEF Terminations (Cont'd)

(Jurisdiction: Arizona, California, Illinois, Indiana, Nevada and North Carolina) (C)

Per STS1/51.84 Mbps DSEF Termination
(a) With a DS3 Electrical Interface (Cont'd)

	Monthly Rate 3 Year Term	Monthly Rate 5 Year Term
25	$449.00	$329.00
26	446.00	327.00
27	444.00	325.00
28	441.00	323.00
29	438.00	321.00
30	435.00	319.00
31	433.00	317.00
32	430.00	315.00
33	428.00	312.00
34	425.00	310.00
35	423.00	308.00
36	420.00	306.00
37	407.00	304.00
38	404.00	302.00
39	402.00	298.00
40	399.00	294.00
41	396.00	288.00
42	393.00	283.00
43	391.00	278.00
44	388.00	273.00
45	386.00	267.00
46	383.00	262.00
47	381.00	257.00
48 and up	378.00	252.00

© 2022 Frontier Communications Parent, Inc. All rights reserved.

ACCESS SERVICE

20. Ethernet Private Line (Cont'd)

20.4 Dedicated SONET Entrance Facilities (Cont'd)

(F) Rates and Charges (Cont'd)

(1) DSEF Terminations (Cont'd)

(Jurisdiction: Arizona, California, Illinois, Indiana, Nevada and North Carolina) (C)

(b) Per STS1/51.84 Mbps DSEF Termination
With an OC3 Optical Interface

	Monthly Rate 3 Year Term	Monthly Rate 5 Year Term
1	$2,310.00	$1,905.00
2	2,260.00	1,705.00
3	1,860.00	1,605.00
4	1,335.00	1,205.00
5	1,175.00	855.00
6	971.00	690.00
7	891.00	633.00
8	831.00	590.00
9	785.00	557.00
10	747.00	530.00
11	717.00	508.00
12	691.00	490.00
13	683.00	488.00
14	680.00	486.00
15	678.00	484.00
16	675.00	482.00
17	673.00	480.00
18	670.00	478.00
19	668.00	476.00
20	665.00	474.00
21	663.00	472.00
22	660.00	470.00
23	658.00	468.00
24	655.00	466.00

© 2022 Frontier Communications Parent, Inc. All rights reserved.

ACCESS SERVICE

20. Ethernet Private Line (Cont'd)

20.4 Dedicated SONET Entrance Facilities (Cont'd)

(F) Rates and Charges (Cont'd)

(1) Terminations (Cont'd)

(Jurisdiction: Arizona, California, Illinois, Indiana, Nevada and North Carolina) (C)

Per STS1/51.84 Mbps DSEF Termination
(b) With an OC3 Optical Interface (Cont'd)

	Monthly Rate 3 Year Term	Monthly Rate 5 Year Term
25	$653.00	$464.00
26	650.00	462.00
27	648.00	460.00
28	645.00	458.00
29	643.00	456.00
30	640.00	454.00
31	638.00	452.00
32	635.00	450.00
33	633.00	448.00
34	630.00	446.00
35	628.00	444.00
36	625.00	442.00
37	613.00	440.00
38	610.00	438.00
39	608.00	434.00
40	605.00	430.00
41	603.00	425.00
42	600.00	420.00
43	598.00	415.00
44	595.00	410.00
45	593.00	405.00
46	590.00	400.00
47	588.00	395.00
48 and up	585.00	390.00

© 2022 Frontier Communications Parent, Inc. All rights reserved.

ACCESS SERVICE

20. Ethernet Private Line (Cont'd)

20.4 Dedicated SONET Entrance Facilities (Cont'd)

(F) Rates and Charges (Cont'd)

(1) DSEF Terminations (Cont'd)

(Jurisdiction: Arizona, California, Illinois, Indiana, Nevada and North Carolina) (C)

(c) Per STS1/51.84 Mbps DSEF Termination
With an OC12 Optical Interface

	Monthly Rate 3 Year Term	Monthly Rate 5 Year Term
1	$2,310.00	$1,905.00
2	2,260.00	1,705.00
3	1,860.00	1,605.00
4	1,335.00	1,205.00
5	1,175.00	970.00
6	896.00	855.00
7	816.00	745.00
8	756.00	665.00
9	710.00	605.00
10	672.00	545.00
11	642.00	500.00
12	616.00	470.00
13	608.00	465.00
14	605.00	455.00
15	603.00	450.00
16	600.00	445.00
17	598.00	440.00
18	595.00	435.00
19	593.00	430.00
20	590.00	424.00
21	588.00	422.00
22	585.00	420.00
23	583.00	418.00
24	580.00	416.00

© 2022 Frontier Communications Parent, Inc. All rights reserved.

ACCESS SERVICE

20. Ethernet Private Line (Cont'd)

20.4 Dedicated SONET Entrance Facilities (Cont'd)

(F) Rates and Charges (Cont'd)

(1) DSEF Terminations (Cont'd)

(Jurisdiction: Arizona, California, Illinois, Indiana, Nevada and North Carolina) (C)

Per STS1/51.84 Mbps DSEF Termination
(c) With an OC12 Optical Interface (Cont'd)

	Monthly Rate 3 Year Term	Monthly Rate 5 Year Term
25	$578.00	$414.00
26	575.00	412.00
27	573.00	410.00
28	570.00	408.00
29	568.00	406.00
30	565.00	404.00
31	563.00	402.00
32	560.00	400.00
33	558.00	398.00
34	555.00	396.00
35	553.00	394.00
36	550.00	392.00
37	538.00	390.00
38	535.00	388.00
39	533.00	384.00
40	530.00	380.00
41	528.00	375.00
42	525.00	370.00
43	523.00	365.00
44	520.00	360.00
45	518.00	355.00
46	515.00	350.00
47	513.00	345.00
48 and up	510.00	340.00

© 2022 Frontier Communications Parent, Inc. All rights reserved.

ACCESS SERVICE

20. Ethernet Private Line (Cont'd)

20.4 Dedicated SONET Entrance Facilities (Cont'd)

(F) Rates and Charges (Cont'd)

(1) DSEF Terminations (Cont'd)

(Jurisdiction: Arizona, California, Illinois, Indiana, Nevada and North Carolina) (C)

(d) Per STS1/51.84 Mbps DSEF Termination
With an OC48 Optical Interface

	Monthly Rate 3 Year Term	Monthly Rate 5 Year Term
1	$6,288.00	$4,488.00
2	3,144.00	2,244.00
3	2,096.00	1,496.00
4	1,572.00	1,122.00
5	1,258.00	898.00
6	1,048.00	748.00
7	898.00	641.00
8	786.00	561.00
9	699.00	499.00
10	629.00	449.00
11	572.00	408.00
12	524.00	343.33
13	517.00	342.41
14	515.00	340.58
15	513.00	338.74
16	510.00	337.82
17	509.00	335.99
18	506.00	334.15
19	505.00	333.23
20	502.00	331.40
21	500.00	329.56
22	498.00	327.73
23	496.00	326.81
24	493.00	324.97

© 2022 Frontier Communications Parent, Inc. All rights reserved.

ACCESS SERVICE

20. Ethernet Private Line (Cont'd)

20.4 Dedicated SONET Entrance Facilities (Cont'd)

(F) Rates and Charges (Cont'd)

(1) DSEF Terminations (Cont'd)

(Jurisdiction: Arizona, California, Illinois, Indiana, Nevada and North Carolina) (C)

Per STS1/51.84 Mbps DSEF Termination
(d) With an OC48 Optical Interface (Cont'd)

	Monthly Rate 3 Year Term	Monthly Rate 5 Year Term
25	$492.00	$323.14
26	489.00	322.22
27	488.00	320.38
28	485.00	318.55
29	483.00	317.63
30	481.00	315.79
31	479.00	313.96
32	476.00	312.12
33	475.00	311.20
34	472.00	309.37
35	471.00	307.53
36	468.00	306.61
37	458.00	304.78
38	455.00	302.94
39	454.00	300.19
40	451.00	296.51
41	449.00	292.84
42	447.00	289.17
43	445.00	285.50
44	442.00	280.91
45	441.00	277.24
46	438.00	273.56
47	437.00	269.89
48 and up	434.00	265.30

© 2022 Frontier Communications Parent, Inc. All rights reserved.

ACCESS SERVICE

20. Ethernet Private Line (Cont'd)

20.4 Dedicated SONET Entrance Facilities (Cont'd)

(F) Rates and Charges (Cont'd)

(2) DSEF Electrical Interfaces

(Jurisdiction: Arizona, California, Illinois, Indiana, Nevada and North Carolina) (C)

(a) DS3 Interface Monthly Recurring Charge

	3-Year Term
	$157.00

	5-Year Term
	$105.00

(3) Installation Charges

(Jurisdiction: Arizona, California, Illinois, Indiana, Nevada and North Carolina) (C)

(a) Per DSEF Termination

	Nonrecurring Charges
STS1 w/ separate Interface	$1.00

(b) Per electrical DSEF Interface

	3-Year Term Nonrecurring Charges
per electrical DSEF Interface - DS3	$1.00

	5-Year Term Nonrecurring Charges
per electrical DSEF Interface - DS3	$1.00

© 2022 Frontier Communications Parent, Inc. All rights reserved.

21. Operating Territories of the Frontier Telephone Companies

The operating territory of the Telephone Company is comprised of the operating territories of Frontier Communications of the Southwest Inc., Frontier Communications of the Carolinas LLC, and Frontier North Inc. (C)

© 2022 Frontier Communications Parent, Inc. All rights reserved.

ACCESS SERVICE

21. **Operating Territories of the Frontier Telephone Companies** (Cont'd)

(A) Operating Territory of Frontier Communications of the Southwest Inc

The operating territory of Frontier Communications of the Southwest Inc. is comprised of the following locations, defined by the names of rate centers, for Arizona, California and Nevada.

(1) Operating Territory of Arizona (4419)

Bouse
Cibola
Ehrenberg
Parker
Parker Dam
Poston

© 2022 Frontier Communications Parent, Inc. All rights reserved.

21. **Operating Territories of the Frontier Telephone Companies** (Cont'd)

(A) Operating Territory of Frontier Communications of the Southwest Inc. (Cont'd)

(2) Operating Territory of California (863F)

Alpine
Big River
Blythe
Havasu Landing
Coleville
Palo Verde

© 2022 Frontier Communications Parent, Inc. All rights reserved.

ACCESS SERVICE

21. **Operating Territories of the Frontier Telephone Companies** (Cont'd)

(A) Operating Territory of Frontier Communications of the Southwest Inc. (Cont'd)

(3) Operating Territory of Nevada (4421)

Garnerville
Glenbrook
Jacks Valley
Mina
Smith Valley
Stateline
Sweetwater
Topaz Lake
Yerington

© 2022 Frontier Communications Parent, Inc. All rights reserved.

ACCESS SERVICE

21. **Operating Territories of the Frontier Telephone Companies** (Cont'd)

(B) Operating Territory of. Frontier North Inc.

The operating territory of Frontier North Inc. is comprised of the following locations, defined by the names of rate centers, for Illinois and Indiana.

(1) Operating Territory of Illinois (1036)

Albers
Alvin
Amboy
Annapolis
Apple Canyon
Apple River
Ashton
Birds
Bismarck
Calhoun
Cedar Point
Cedarville
Chauncey
Creston
Dakota
Davis
Dekalb
Dundas
Durand
Elizabeth
Fayetteville
Forreston
Franklin Grove
Freeport
Galva
Genoa
German Valley
Granville
Hanover
Hardinville
Hecker
Henning
Hinckley
Hutsonville
Kirkland
Lena
Malta
Maple Park
Mascoutah
Massbach
McConnell
Millstadt
Monroe Center
Mount Morris
New Baden
New Haven
Norris City
Okwaville
Omaha
Orangeville
Oregon
Palestine
Parkersburg
Paulton
Pearl City
Pectaonica
Putnam
Raleigh
Rochelle
Rossville
Sailor Springs
Scales Mound
Seward
Shabbona
Steward
Stockton
Sublette
Summerfield
Sycamore
Warren
Waterman
Wendelin
West Salem
Winslow

© 2022 Frontier Communications Parent, Inc. All rights reserved.

ACCESS SERVICE

21. **Operating Territories of the Frontier Telephone Companies** (Cont'd)

(B) Operating Territory of Frontier North Inc. (Cont'd)

(2) Operating Territory of Indiana (0779)

Austin
Batesville
Bicknell
Birdseye
Brownstown
Butlerville
Campbellsburg
Carlisle
Central
Clearspring
Corydon
Crandall
Crane
Crothersville
Cynthiana
Decker
Dubois
Elberfeld
Elizabeth
English
Fairbanks
Farmersburg
Ferdinand
Fort Branch
Francisco
Fredericksburg
Freelandville
Freetown
Fritchton
Georgetown
Greensburg
Hanover
Haysville
Hazleton
Henryville
Huntingburg
Jasper
Laconia
Lanesville
Leavenworth
Lexington
Loogootee
Lynnville
Mackey
Madison-North Madison
Marengo
Medora
Merom
Milan
Milltown
Mitchell
Monroe City
New Middletown
North Vernon
Oakland City
Oaktown (Carlisle)
Orleans
Owensville
Palmyra
Paoli
Patoka
Petersburg
Princeton
Ramsey
Reddington
Salem
Scipio
Scottsburg
Seymour
Shelburn
Shoals
Spurgeon
St. Anthony
Versailles
Westport
Wheatlan
Worthington

© 2022 Frontier Communications Parent, Inc. All rights reserved.

ACCESS SERVICE

21. **Operating Territories of the Frontier Telephone Companies** (Cont'd)

(D)

(C) RESERVED

(D)

© 2022 Frontier Communications Parent, Inc. All rights reserved.

21. **Operating Territories of the Frontier Telephone Companies** (Cont'd)

(D) Operating Territory of Frontier Communications of the Carolinas LLC (C)

(1) Operating Territory of North Carolina (0509)

Andrews
Bakersville
Bryson City
Burnsville
Cashiers
Cherokee
Cuilowhee
Fontana Village
Franklin
Garden City
Glenwood Providence
Guntertown
Hayesville
Highlands
Hot Springs
Knotts Island
Marion
Mars Hill
Marshall
Micaville
Murphy
Old Fort
Robbinsville
Sevier
Suit
Sylva
Weaverville

© 2022 Frontier Communications Parent, Inc. All rights reserved.

ACCESS SERVICE

21. **Operating Territories of the Frontier Telephone Companies** (Cont'd)

21.1 Competitive Counties for Special Access (N)

21.1.1 General

Certain Special Access rates and charges are applied based on whether the End User Channel Termination is served from a "Competitive County." Competitive Counties are defined in Section 2.6, and the wire centers within such counties are listed in Section 10.2 below.

21.1.2 Competitive County List

(A) The following wire centers are in Competitive Counties:

State	County	Wire Center
AZ	Yuma	CIBLAZXC
CA	Riverside	BLYTCAXF
CA	Riverside	PLVRCAXF
CA	San Bernardino	BGRVCAXF
CA	San Bernardino	HVSUCAXF
IL	Clinton	ALBRILXE
IL	Clinton	NWBDILXE
IL	Crawford	ANNPILXE
IL	Crawford	HAVLILXE
IL	Crawford	HTSVILXE
IL	Crawford	PLSTILXE
IL	Edwards	WSLMILXE
IL	Jo Daviess	ACLKILXA
IL	Jo Daviess	APRVILXA
IL	Jo Daviess	ELZBILXA
IL	Jo Daviess	HNVRILXA
IL	Jo Daviess	MSBCILXA
IL	Jo Daviess	SCMNILXA
IL	Jo Daviess	SKTNILXA

(N)

© 2022 Frontier Communications Parent, Inc. All rights reserved.

ACCESS SERVICE

21. **Operating Territories of the Frontier Telephone Companies** (Cont'd)

21.1 Competitive Counties for Special Access (Cont'd) (N)

21.1.2 Competitive County List (Cont'd)

(A) The following wire centers are in Competitive Counties: (Cont'd)

State	County	Wire Center
IL	Jo Daviess	WRRNILXA
IL	Kane	MAPKILXA
IL	Livingston	CLLMILXA
IL	McLean	CKVLILXD
IL	Richland	CLHNILXE
IL	Richland	DNDSILXE
IL	Richland	PRBGILXE
IL	St. Clair	FYVLILXE
IL	St. Clair	MLSTILXE
IL	St. Clair	MSCTILXE
IL	St. Clair	SRFDILXE
IL	Williamson	PLTNILXE
IL	Winnebago	DRNDILXA
IL	Winnebago	PCTNILXA
IL	Winnebago	SWRDILXA
IN	Clark	HEVLINXA
IN	Crawford	ENGLINXB
IN	Crawford	LVWOINXA
IN	Crawford	MLTWINXA
IN	Crawford	MRNGINXA
IN	Decatur	GNBGINXB
IN	Decatur	WSPTINXA
IN	Dubois	BRDSINXA
IN	Dubois	DUBSINXA
IN	Dubois	FDNDINXA
IN	Dubois	HGBGINXA
IN	Dubois	HYVLINXA
IN	Dubois	JSPRINXA
IN	Dubois	STATINXA
IN	Floyd	GRTWINXA

(N)

© 2022 Frontier Communications Parent, Inc. All rights reserved.

ACCESS SERVICE

21. **Operating Territories of the Frontier Telephone Companies** (Cont'd) (N)

21.1 Competitive Counties for Special Access (Cont'd)

21.1.2 Competitive County List (Cont'd)

(A) The following wire centers are in Competitive Counties: (Cont'd)

State	County	Wire Center
IN	Gibson	FRNCINXA
IN	Gibson	FTBRINXA
IN	Gibson	HZTNINXA
IN	Gibson	MCKYINXA
IN	Gibson	OKCYINXA
IN	Gibson	OWVLINXA
IN	Gibson	PATKINXA
IN	Gibson	PRTNINXA
IN	Gibson	SPRGINXA
IN	Harrison	CENTINXA
IN	Harrison	CRNDINXA
IN	Harrison	CYDNINXA
IN	Harrison	ELZBINXA
IN	Harrison	LACNINXA
IN	Harrison	LNVLINXA
IN	Harrison	NWMLINXA
IN	Harrison	PLMYINXA
IN	Harrison	RMSYINXA
IN	Jackson	BRTWINXA
IN	Jackson	CLSPINXA
IN	Jackson	COVLINXA
IN	Jackson	FRTWINXA
IN	Jackson	FTTNINXA
IN	Jackson	MEDRINXA
IN	Jackson	RDTNINXA
IN	Jackson	SYMRINXA
IN	Jefferson	HNVRINXA
IN	Jefferson	MDSNINXA
IN	Jennings	BTVIINXA
IN	Jennings	NVRNINXA
IN	Jennings	SCIPINXA
IN	Knox	BCKNINXA
IN	Knox	DCKRINXA
IN	Knox	FNVLINXA
IN	Knox	MNCYINXA
IN	Knox	OKTWINXB
IN	Knox	WTLDINXA

(N)

© 2022 Frontier Communications Parent, Inc. All rights reserved.

ACCESS SERVICE

21. Operating Territories of the Frontier Telephone Companies (Cont'd)

21.1 Competitive Counties for Special Access (Cont'd)

21.1.2 Competitive County List (Cont'd)

(A) The following wire centers are in Competitive Counties: (Cont'd)

State	County	Wire Center
IN	Martin	CRANINXA
IN	Martin	LOGTINXA
IN	Martin	SHLSINXA
IN	Pike	PTBGINXB
IN	Posey	CYNTINXA
IN	Ripley	BTVLINXA
IN	Ripley	MILNINXA
IN	Ripley	VRSLINXA
IN	Scott	AUSTINXA
IN	Scott	LXTNINXA
IN	Scott	SCBGINXA
IN	Warrick	ELBRINXA
IN	Warrick	LYVLINXA
IN	Washington	CMBGINXA
IN	Washington	FRBGINXB
IN	Washington	SALMINXA
NC	Buncombe	WVVLNCXA
NC	Macon	FKLNNCXA
NC	Macon	HGLNNCXA
NC	Madison	HTSPNCXA
NC	Madison	MRHLNCXA
NC	Madison	MRSHNCXA
NC	McDowell	GRCYNCXA
NC	McDowell	GWPRNCXA
NC	McDowell	MARNNCXB
NC	McDowell	OLFTNCXA
NC	McDowell	SEVRNCXA
NC	Rockingham	GTTWNCXA
NV	Douglas	GLBKNVXF
NV	Douglas	GRDVNVXA
NV	Douglas	GVRSNVXF
NV	Douglas	JKVYNVXF
NV	Douglas	STLNNVXF
NV	Douglas	TPLKNVXA

© 2022 Frontier Communications Parent, Inc. All rights reserved.

ACCESS SERVICE

21. **Operating Territories of the Frontier Telephone Companies** (Cont'd)

21.1 Competitive Counties for Special Access (Cont'd)

21.1.2 Competitive County Lists (Cont'd)

(A) The following wire centers are in Competitive Counties: (Cont'd)

State	County	Wire Center
IN	Martin	CRANINXA
IN	Martin	LOGTINXA
IN	Martin	SHLSINXA
IN	Pike	PTBGINXB
IN	Posey	CYNTINXA
IN	Ripley	BTVLINXA
IN	Ripley	MILNINXA
IN	Ripley	VRSLINXA
IN	Scott	AUSTINXA
IN	Scott	LXTNINXA
IN	Scott	SCBGINXA
IN	Warrick	ELBRINXA
IN	Warrick	LYVLINXA
IN	Washington	CMBGINXA
IN	Washington	FRBGINXB
IN	Washington	SALMINXA
NC	Buncombe	WVVLNCXA
NC	Macon	FKLNNCXA
NC	Macon	HGLNNCXA
NC	Madison	HTSPNCXA
NC	Madison	MRHLNCXA
NC	Madison	MRSHNCXA
NC	McDowell	GRCYNCXA
NC	McDowell	GWPRNCXA
NC	McDowell	MARNNCXB
NC	McDowell	OLFTNCXA
NC	McDowell	SEVRNCXA
NC	Rockingham	GTTWNCXA
NV	Douglas	GLBKNVXF
NV	Douglas	GRDVNVXA
NV	Douglas	GVRSNVXF
NV	Douglas	JKVYNVXF
NV	Douglas	STLNNVXF
NV	Douglas	TPLKNVXA

© 2022 Frontier Communications Parent, Inc. All rights reserved.

ACCESS SERVICE

21. **Operating Territories of the Frontier Telephone Companies** (Cont'd)

21.1 RESERVED

(D)

(D)

© 2022 Frontier Communications Parent, Inc. All rights reserved.

ACCESS SERVICE

22. RESERVED

© 2022 Frontier Communications Parent, Inc. All rights reserved.

ACCESS SERVICE

23. Service Components

The Tariffed Service Components offered in this Section 23 are for the exclusive use of customers for connecting to the interstate services provided by the Telephone Company as described in more detail herein.

23.1 Integrated Optical Service Riders *

23.1.1 General

(A) Telephone Company provided integrated optical service, which is provided where technically and operationally feasible as determined by the Telephone Company, provides a customer with a single network platform that is capable of converging SONET, Dense Wave Division Multiplexing, and Ethernet technologies.

(B) An Integrated Optical Service Rider is a service component provided under tariff that allows a lower level signal to be transported only between two points (nodes) on a Telephone Company provided integrated optical service.

(C) Integrated Optical Service Riders are provided in the following protocols:

(1) DS1 Special Access – for transmission of isochronous serial data at a rate of 1.544 Mbps.

(2) DS3 Special Access – for transmission of isochronous serial data at a rate of 44.736 Mbps.

(D) Integrated Optical Service Riders are only available on a protected basis. A protected rider allows for a single signal from the customer to be duplicated and sent over separate diverse routes (working and protect).

23.1.2 Deployment and Availability

Integrated Optical Service Riders may only be added to an in-service Telephone Company provided integrated optical service. Integrated Optical Service Riders are provided based on negotiated intervals.

23.1.3 Connection to Other Services

(A) A High Capacity Special Access DS1/DS3 service may be connected to an in-service Telephone Company provided integrated optical service to be originated or terminated to an integrated optical service customer designated premises node via an Integrated Optical Service DS1/DS3 Rider.

(B) The High Capacity Special Access Service must be ordered with the same length Commitment Period as the Integrated Optical Service Rider.

(C) For purposes of administering the regulations and rates contained in this Guide, the portion of the High Capacity Special Access Service which is delivered over the Telephone Company provided integrated optical service is considered to be a High Capacity Special Access service, except as follows: Rates and charges for the High Capacity Special Access service are not applicable to the portion of the service which is delivered over the Telephone Company provided integrated optical service. Rates for the Integrated Optical Service Rider are applicable to the portion of the service which is delivered over the Telephone Company provided integrated optical service.
*(All jurisdictions)

© 2022 Frontier Communications Parent, Inc. All rights reserved.

ACCESS SERVICE

23. **Service Components** (Cont'd)

23.1 **Integrated Optical Service Riders** * (Cont'd)

23.1.4 **Responsibility of the Customer**

All Integrated Optical Service Rider signals generated by CPE and delivered to the Telephone Company for multiplexing on to an integrated optical service must meet industry standards and specifications for the underlying protocol. The customer is responsible to perform any error detection and error correction of the data generated by its equipment. The Telephone Company assumes no responsibility for the quality of the signal generated by the customer or any CPE and will deliver the signal to the receiving location in the same format and condition as generated by the customer.

23.1.5 **Conversions**

(A) Customers who wish to convert both points of termination of an existing High Capacity Special Access Service to an Integrated Optical Service Rider may do so without termination liability as long as the capacity of the Integrated Optical Service Rider purchased by the customer is equal to or greater than the capacity of the converted High Capacity Special Access Service.

(B) Customers who wish to convert one point of termination of an existing High Capacity Special Access Service to an Integrated Optical Service Rider, as specified in Section 23.1.3 preceding, may do so without termination liability.

23.1.6 **Application of Rates**

(A) For each Integrated Optical Service Rider, monthly recurring rates apply at the ingress and egress locations (Appearances) on the integrated optical service. Two Appearances (one for ingress and one for egress) apply for an Integrated Optical Service Rider provided in a point-to-point (node-to-node) configuration.

(B) When a High Capacity Special Access Service is ordered to connect to a Telephone Company provided integrated optical service as specified in Section 23.1.3 preceding, the Integrated Optical Service Rider rates will be billed to the customer of record for the associated High Capacity Special Access service.

23.1.7 **Term Plans**

(A) Integrated Optical Service Riders are available for term plan lengths of one (1) year, two (2) years, three (3) years, five (5) years, or seven (7) years (Commitment Periods).

23.1.8 **Expiration of Commitment Period**

Upon expiration of any Commitment Period, the Telephone Company will continue to provide Integrated Optical Service Riders on a month-to-month basis, under the prevailing rates of the current term plan, until the customer cancels service or requests a new term plan.

(All jurisdictions)

© 2022 Frontier Communications Parent, Inc. All rights reserved.

ACCESS SERVICE

23. **Service Components** (Cont'd)

23.1 **Integrated Optical Service Riders** * (Cont'd)

23.1.9 **Termination Liability**

(A) Only Integrated Optical Service Riders are subject to termination liability if service is disconnected prior to the end of the Commitment Period. Termination liability is calculated as follows:

(1) If the disconnection occurs during the first year of the Commitment Period, the Minimum Period obligation specified in Section 23.1.10 following applies for the unexpired portion of the first year. Termination liability is calculated at one hundred percent (100%) of the monthly recurring rates for the second year and twenty-five percent (25%) of the monthly recurring rates for the 25th month through the remainder of the Commitment Period, as applicable.

(2) If the disconnection occurs during the second year of the Commitment Period, termination liability is calculated at one hundred percent (100%) of the monthly recurring rates for the unexpired portion of the second year and twenty-five percent (25%) of the monthly recurring rates for the 25th month through the remainder of the Commitment Period,asf applicable.

(3) If the disconnection occurs after the first two (2) years of the Commitment Period, termination liability is calculated at twenty-five (25%) of the monthly recurring rates from the date of disconnection through the remainder of the Commitment Period.

(B) Termination liability will not apply in the following situations:

(1) An Integrated Optical Service Rider is upgraded to a higher capacity Integrated Optical Service Rider (i.e., DS1 to DS3), and the following conditions are met:

(a) The new Integrated Optical Service Rider has an equal or longer Commitment Period than the existing Integrated Optical Service Rider; and

(b) All of the locations of the existing Integrated Optical Service Rider and new Integrated Optical Service Rider are the same.

The Customer remains responsible for satisfying any outstanding Minimum Period obligations.

(2) The customer cancels its term plan in order to establish a new term plan with a Commitment Period that is equal to, or longer than, the term plan being cancelled.

23.1.10 **Minimum Period**

(A) If an Integrated Optical Service Rider is disconnected during the Minimum Period, the customer shall pay to the Telephone Company one hundred percent (100%) of the monthly recurring rates from the date of disconnection through the end of the Minimum Period.

(B) Integrated Optical Service Riders are subject to a one (1) year Minimum Period.

*(All jurisdictions)

(

© 2022 Frontier Communications Parent, Inc. All rights reserved.

ACCESS SERVICE

23. **Service Components** (Cont'd)

23.1 **Integrated Optical Service Riders *** (Cont'd)

23.1.11 **Rates and Charges**

Integrated Optical Service Riders
(All jurisdictions)

Protected
- Per appearance

	Nonrecurring Charge	Monthly Recurring Rates
DS1		
1-Year Term	$0.00	$75.00
2-Year Term	$0.00	$75.00
3-Year Term	$0.00	$75.00
5-Year Term	$0.00	$75.00
7-Year Term	$0.00	$75.00
DS3		
1-Year Term	$0.00	$150.00
2-Year Term	$0.00	$150.00
3-Year Term	$0.00	$150.00
5-Year Term	$0.00	$150.00
7-Year Term	$0.00	$150.00

*(All jurisdictions)

© 2022 Frontier Communications Parent, Inc. All rights reserved.