Interstate Service Guide and Pricelist
for Customers of Detariffed Access Services
within the operating territories
listed on the Title Pages

LEGAL NOTICE

The FRONTIER Interstate Service Guide and Pricelist (Guide) applies to the FRONTIER "Detariffed Services" (as defined below) and other telecommunications services that are set forth in this Guide.

Detariffed Services, as described in this document, are interstate special access services for which tariffs were withdrawn pursuant to FCC Report and Order, FCC 17-43, released April 28, 2017.

Beginning upon the effectiveness of the withdrawal of Detariffed Service tariffs, Detariffed Services will be subject to and provided pursuant to the rates, terms and conditions of this Guide, unless a separately executed service agreement between you and Frontier provides otherwise.

Prospective customers wishing to purchase services at the rates, terms and conditions in the Guide may do so by initiating orders through the same processes used to order services from FRONTIER's interstate access tariffs.

Service that is ordered without a separately executed service agreement between you and FRONTIER that applies to that order, will also be subject to the FRONTIER Interstate Access Service Agreement at https://wholesale.frontier.com/docs/wholesaledocs/frontier-interstate-access-service-agreement.pdf.

The services described in the Guide may be available through negotiated agreements, which may include rates, terms or conditions more favorable to you than those in the Guide. Prospective customers wishing to purchase Guide services at rates, terms or conditions different from those described in the Guide and the applicable FRONTIER Interstate Access Service Agreement may contact their FRONTIER service representative or go to the FRONTIER website at https://wholesale.frontier.com/wholesale/access-services/interstate-service-guide.

FRONTIER reserves the right to change the rates, terms and conditions in the Guide from time to time. Notification of Guide changes will be made available at the FRONTIER website.

DISCLAIMER: THIS DOCUMENTATION IS FOR INFORMATIONAL PURPOSES ONLY AND DOES NOT OBLIGATE FRONTIER TO PROVIDE SERVICES IN THE MANNER DESCRIBED IN THIS DOCUMENT. FRONTIER RESERVES THE RIGHT AS ITS SOLE OPTION TO MODIFY OR REVISE THE INFORMATION IN THIS DOCUMENT AT ANY TIME WITHOUT PRIOR NOTICE. IN NO EVENT SHALL FRONTIER OR ITS AGENTS, EMPLOYEES, DIRECTORS, OFFICERS, REPRESENTATIVES OR SUPPLIERS BE LIABLE UNDER CONTRACT, WARRANTY, TORT (INCLUDING BUT NOT LIMITED TO NEGLIGENCE OF FRONTIER), OR ANY OTHER LEGAL THEORY, FOR ANY DAMAGES ARISING FROM OR RELATING TO THIS DOCUMENT OR ITS CONTENTS, EVEN IF ADVISED OF THE POSSIBLITY OF SUCH DAMAGES.

© 2022 Frontier Communications Parent, Inc. All rights reserved..

FACILITIES FOR INTERSTATE ACCESS

Regulations, Rates and Charges Applicable to

Facilities for Interstate Access, Ancillary and Miscellaneous Services

provided by

Frontier Telephone Companies

to Interstate Customers

The geographical applications are as indicated following the names of the issuing carriers listed below:

ISSUING CARRIERS

Frontier California Inc.
For the State of: California (OCN 2319) (T)

Frontier Florida LLC d/b/a Frontier Communications of Florida
For the State of: Florida (OCN 0328) (T)

Frontier Southwest Incorporated
For the State of: Texas (OCN 4344) (T)

Services herein are provided by means of wire, fiber optics, radio or any other suitable technology or a combination thereof.

© 2022 Frontier Communications Parent, Inc. All rights reserved..

FACILITIES FOR INTERSTATE ACCESS

TABLE OF CONTENTS

	Page No.
ISSUING CARRIERS	Title 2
Table of Contents	2
Registered Trademarks	12
Concurring Carriers	12
Connecting Carriers	12
Other Participating Carriers	12
Explanation of Symbols	12
Explanation of Abbreviations	13
Reference to Other Tariffs	18
Reference to Other Publications	18
1. APPLICATION OF GUIDE	1-1
2. GENERAL REGULATIONS	2-1
2.1 Undertaking of the Telephone Company	2-1
2.1.1 Scope	2-1
2.1.2 Limitations	2-1
2.1.3 Liability	2-2
2.1.4 Provision of FIA	2-4
2.1.5 Installation and Termination of FIA	2-4
2.1.6 Maintenance of FIA	2-4
2.1.7 Changes and Substitutions	2-5
2.1.8 Discontinuance and Refusal of FIA	2-6
2.1.9 Preemption of FIA	2-8
2.1.10 Limitation of Use of Metallic Facilities	2-8
2.2 Use	2-9
2.2.1 Interference or Impairment	2-9
2.2.2 Unlawful Use of FIA	2-9
2.2.3 Commingling	2-10

© 2022 Frontier Communications Parent, Inc. All rights reserved..

FACILITIES FOR INTERSTATE ACCESS

TABLE OF CONTENTS (Cont'd)

Page No.

2. GENERAL REGULATIONS (Cont'd)

2.3 Obligation of the Customer 2-11

2.3.1 Damages 2-11
2.3.2 Theft 2-11
2.3.3 Equipment Space and Power 2-11
2.3.4 Space and Power for Expanded Interconnection Service 2-12
2.3.5 Availability for Testing 2-12
2.3.6 Balance 2-12
2.3.7 Design of Customer Services 2-12
2.3.8 References to Telephone Company 2-12
2.3.9 Claims and Demands for Damages 2-13
2.3.10 Coordination With Respect to Network Contingencies 2-13

2.4 Payment Arrangements 2-14
2.4.1 Payment of Charges and Deposits 2-14
2.4.2 Minimum Periods 2-19
2.4.3 Cancellation of an ASR 2-19

2.5 Connections 2-20

2.5.1 General 2-20
2.5.2 Standard Access Service Connections 2-20

2.6 Definitions 2-21

2.7 FIA Services Provided By More Than One Telephone Company 2-50

2.7.1 General 2-50
2.7.2 Reserved 2-50
2.7.3 Meet Point Billing 2-50
2.7.4 Zone Density Meet Point Billing 2-60

© 2022 Frontier Communications Parent, Inc. All rights reserved..

TABLE OF CONTENTS (Cont'd)

		Page No.	
2.	GENERAL REGULATIONS (Cont'd)		
2.8	Service Level Agreements	2-61	
2.8.1	Basic Service Level Agreements (Basic SLAs)	2-61	
2.8.1.1	Credit Allowance for FIA Interruptions	2-62	
2.8.1.2	Reserved For Future Use	2-70	(C)
2.8.2	Enhanced Service Level Agreements (Enhanced SLAs)	2-71	
2.8.2.1	Integrated Optical Service Rider SLAs	2-72	
2.8.3	Reserved for Future Use	2-76	
2.8.4	When a Credit Allowance Does Not Apply	2-77	
2.9	Sale or Transfer of an Operating Telephone Company's Assets and/or Stock to an Unaffiliated Third Party	2-81	
2.9.1	General	2-81	
2.9.2	Undertaking of the Telephone Company Following a Transfer	2-82	
2.10	Technology Migration	2-89	
2.10.1	Service Under a DS3 Minimum Service Period	2-90	
2.10.2	Service Under a DS1 Term Volume Plan (DS1 TVP/ETTVP)	2-90	
2.10.3	Service Under a DS3 Term Volume Plan	2-91	
2.10.4	Service Under a National Discount Plan	2-92	
2.10.5	Requirements for a Technology Migration	2-93	
2.11	Initial Transfer of Assets from Predecessor Company	2-100	

© 2023 Frontier Communications Parent, Inc. All rights reserved..

FACILITIES FOR INTERSTATE ACCESS

TABLE OF CONTENTS (Cont'd)

Page No.

3. ORDERING OPTIONS FOR FIA (C)

3.1 General 3-1

3.1.1 Ordering Conditions 3-1
3.1.2 Provision of Other Services 3-8
3.1.3 Special Construction 3-8

3.2 Access Service Request 3-8.1

3.2.1 Service Date Intervals 3-9
3.2.2 ASR Modifications 3-10
3.2.3 Selection of Facilities for Access Service 3-13
3.2.4 Minimum Period 3-14
3.2.5 Minimum Period Charges 3-15
3.2.6 Cancellation of an ASR 3-16
3.2.7 Discontinuance of Switched Access FGD or BSA-D 3-23

3.3 Access Service Requests For Services Provided By More Than One Telephone Company ..... 3-25 (C)

4. RESERVED FOR FUTURE USE 4-1

5. SPECIAL ACCESS 5-1
5.1 General 5-1

5.1.1 Rate Elements 5-2
5.1.2 Special Access Configurations 5-9
5.1.3 Special Facilities Routing 5-13
5.1.4 Design Layout Report 5-13
5.1.5 Acceptance Testing 5-14
5.1.6 Ordering Conditions 5-15

5.2 Description of Special Access 5-16

5.2.1 Voiceband 5-17
5.2.2 Reserved for Future Use 5-17
5.2.3 Program Audio 5-18
5.2.4 Video Digital Transport Service 5-20
5.2.5 Reserved for Future Use 5-23
5.2.6 Reserved for Future Use 5-23
5.2.7 High Capacity Digital 5-24
5.2.8 DS1/DS3/FiberConnect Enhanced Access Diversity (EAD) 5-26
5.2.9 Digital Data Service 5-29
5.2.10 Bonded Digital Link Service (BDLS) 5-30
5.2.11 Miscellaneous Special Access Services 5-32

© 2022 Frontier Communications Parent, Inc. All rights reserved..

TABLE OF CONTENTS (Cont'd)

			Page No.
5.	SPECIAL ACCESS (cont'd)		
5.3	Description of Terminating Options		5-33
	5.3.1	Reserved for Future Use	5-33
	5.3.2	Voice Grade	5-33
	5.3.3	Program Audio	5-35
	5.3.4	Video Digital Transport Service	5-35
	5.3.5	Reserved for Future Use	5-35
	5.3.6	High Capacity Digital	5-36
	5.3.7	Digital Data Service (DDS)	5-37
5.4	Description of Supplemental Features		5-38
	5.4.1	Bridging	5-38
	5.4.2	Conditioning Arrangements Data	5-40
	5.4.3	Conditioning Program Audio	5-41
	5.4.4	Signaling Arrangements	5-42
	5.4.5	Echo Control	5-44
	5.4.6	Improved Return Loss	5-44
	5.4.7	Voiceband Facility Switching Arrangement	5-44
	5.4.8	Automatic Protection Switch	5-45
	5.4.9	Improved Termination Option	5-45
	5.4.10	Improved Equal Level Echo Path Loss Option ELEPL 2	5-46
	5.4.11	Digital Data Service Secondary Channel	5-46
5.5	Description of Multiplexing Arrangements		5-47
5.6	Rate Regulations		5-50
	5.6.1	Types of Rates and Charges	5-50
	5.6.2	Minimum Periods	5-64
	5.6.3	Mileage Measurement	5-65
	5.6.4	Moves	5-65
	5.6.5	Rates and Charges on an Individual Case Basis	5-67
	5.6.6	Hub Wire Centers	5-68
	5.6.7	Shared Use Analog and Digital High Capacity Services	5-70
	5.6.8	Video Digital Transport Services	5-72
	5.6.9	Special Access Surcharge	5-92
	5.6.10	Message Station Equipment Recovery Charge	5-93
	5.6.11	DS3 High Capacity Service	5-94
	5.6.12	Optional Payment Plan (OPP)	5-105
	5.6.13	Four-Wire Voiceband and Digital Data Service (DDS) Rate Stability Plan (RSP)	5-109
	5.6.14	DS1 Term Volume Plans (TVP)	5-118
	5.6.15	E1 (2.048 Mbps) High Capacity Service	5-141
	5.6.16	Reserved	5-143
	5.6.17	High Voltage Protection	5-158
	5.6.18	Reserved for Future Use	5-161
	5.6.19	DS3 Term Volume Plan	5-162

© 2022 Frontier Communications Parent, Inc. All rights reserved..

TABLE OF CONTENTS (Cont'd)

Page No.

5. SPECIAL ACCESS (Cont'd)

5.7 Rates and Charges

5.7.1	Nonrecurring Charges	5-182
5.7.2	Voiceband Facilities	5-183
5.7.3	Program Audio Facilities	5-192
5.7.4	Reserved	5-198
5.7.5	Digital Data Service Facilities	5-231
5.7.5.1	Bonded Digital Link Service	5-238
5.7.6	Multiplexing Arrangements	5-239
5.7.7	High Capacity Digital DS1 (1.544 Mbps) Facilities	5-245
5.7.8	High Capacity Digital FiberConnect (4 x1.544 Mbps) Facilities	5-251
5.7.9	Reserved for Future Use	5-252
5.7.10	High Capacity Digital DS3 (44.736 Mbps) Facilities Three System	5-253
5.7.11	High Capacity Digital DS3 (44.736 Mbps) Facilities Unlimited System	5-261
5.7.12	High Capacity Digital DS3 (44.736 Mbps) Facilities Individual System	5-269
5.7.13	High Capacity Digital DS3 (44.736 Mbps) Facilities - Group Systems	5-273
5.7.14	High Capacity Digital DS3 (44.736 Mbps) Facilities - Special Transport	5-281
5.7.15	High Capacity Digital DS3 (44.736 Mbps) Facilities DS3 Multiplexer Cross Connect Arrangement	5-286
5.7.16	Four-Wire Voiceband and Digital Data Service (DDS) Rate Stability Plan (RSP)	5-287
5.7.17	DS1/DS3/FiberConnect Enhanced Access Diversity (EAD)	5-291
5.7.18	DS1 Term Volume Plan (TVP)	5-292
5.7.19	High Capacity Digital E1 (2.048 Mbps) Facilities	5-324
5.7.20	High Voltage Protection	5-325
5.7.21	Reserved for Future Use	5-325
5.7.22	DS3 Term Volume Plan	5-326

© 2022 Frontier Communications Parent, Inc. All rights reserved..

TABLE OF CONTENTS (Cont'd)

Page No.

5. SPECIAL ACCESS (Cont'd)

5.8 Miscellaneous Special Access Services 5-344

5.8.1 Reserved for Future Use 5-344
5.8.2 Reserved for Future Use 5-344
5.8.3 Reserved for Future Use 5-344
5.8.4 Telephoto Conditioning 5-344
5.8.5 Clear Channel Capability 5-344

© 2022 Frontier Communications Parent, Inc. All rights reserved..

TABLE OF CONTENTS (Cont'd)

		Page No.
6.	MISCELLANEOUS SERVICES	6-1
6.1	Reserved for Future Use	6-1
6.2	Additional Labor	6-1
6.3	Maintenance of Service Charge	6-6
6.4	Telecommunications Service Priority (TSP) System	6-7
6.5	Additional Testing	6-13
6.6	End User/Agent Lists	6-17
6.7	Denial/Restoral Service	6-19
6.8	DS1 Span Power	6-20

© 2022 Frontier Communications Parent, Inc. All rights reserved..

TABLE OF CONTENTS (Cont'd)

		Page No.
7.	RESERVED FOR FUTURE USE	7-1
8.	RESERVED FOR FUTURE USE	8-1
9.	RESERVED FOR FUTURE USE	9-1
10.	RESERVED FOR FUTURE USE	10-1
11.	RESERVED FOR FUTURE USE	11-1
12.	RESERVED FOR FUTURE USE	12-1
13.	RESERVED FOR FUTURE USE	13-1
14.	RESERVED FOR FUTURE USE	14-1
15.	RESERVED FOR FUTURE USE	15-1
16.	RESERVED FOR FUTURE USE	16-1
17.	RESERVED FOR FUTURE USE	17-1
18.	RESERVED FOR FUTURE USE	18-1
19.	WIRE CENTER INFORMATION	19-1
19.1	RESERVED FOR FUTURE USE	19-1
19.2	Competitive Counties	19-25
20.	OPTICAL NETWORKING	20-1
20(A)	General	20-1
20(B)	Description	20-1
20(C)	Conditions	20-2
20(D)	Application of Rates and Charges	20-3
20(E)	Reserved for Future Use	20-11
20(F)	Reserved for Future Use	20-11
20(G)	Rate Regulations	20-12
20(H)	Off-Net Wire Center	20-15
20(I)	Shared Use	20-15
20(J)	Reserved for Future Use	20-15
20(K)	Optical Networking LANs	20-16
20(L)	Rates and Charges	20-24
20.1	Reserved for Future Use	20-59
20.2	Reserved for Future Use	20-59
20.3	Reserved for Future Use	20-59
20.4	Dedicated SONET Entrance Facilities	20-60

© 2022 Frontier Communications Parent, Inc. All rights reserved..

FACILITIES FOR INTERSTATE ACCESS

TABLE OF CONTENTS (Cont'd)

		Page No.	
21.	RESERVED FOR FUTURE USE	21-1	(Z)
22.	OPERATING TERRITORIES OF THE FRONTIER TELEPHONE COMPANIES	22-1	(Z)
22.1	General	22-1	
22.2	Operating Territory of Frontier California Inc.	22-2	
22.3	Operating Territory of Frontier Florida LLC	22-3	
22.4	Operating Territory of Frontier Southwest Incorporated	22-4	
23.	NATIONAL DISCOUNT PLAN#	23-1	(Z)
24.	RESERVED FOR FUTURE USE	24-1	(Z)

© 2022 Frontier Communications Parent, Inc. All rights reserved..

FACILITIES FOR INTERSTATE ACCESS

REGISTERED TRADEMARKS

Telcordia® and Common Language® are registered trademarks and iconectiv, CLCI, CLEI, CLFI, CLLI, USOC, FID, NC, NCI and NC/NCI, are trademarks of Telcordia Technologies, Inc. The Common Language codes identified in this Guide are the proprietary information of Telcordia Technologies, Inc. dba iconectiv and are licensed to the Telephone Company. The Common Language codes are provided herein solely for the purpose of this Guide filing and may not be reproduced, stored, or used for any other purpose without the express, written consent of inconectiv.

CONCURRING CARRIERS

No Concurring Carriers

CONNECTING CARRIERS

No Connecting Carriers

OTHER PARTICIPATING CARRIERS

No Other Participating Carriers

EXPLANATION OF SYMBOLS

(C)	To signify changed regulation
(D)	To signify discontinued rate or regulation
(I)	To signify increase
(M)	To signify matter relocated without change
(N)	To signify new rate or regulation
(R)	To signify reduction
(S)	To signify reissued matter
(T)	To signify a change in text but no change in rate or regulation
(Z)	To signify a correction

© 2022 Frontier Communications Parent, Inc. All rights reserved..

FACILITIES FOR INTERSTATE ACCESS

EXPLANATION OF ABBREVIATIONS

AAM	Assumed Access Minutes
ac	alternating current
ACAT	Additional Cooperative Acceptance Testing
ACD	Automatic Call Distributor
ACNA	Access Customer Name Abbreviation
ACTL	Access Customer Terminal Location
ADM	Add/Drop Multiplexing
AIOD	Automatic Identification of Outward Dialed
AM	Access Minutes
ANI	Automatic Number Identification
ARC	Access Recovery Charge
ARD	Automatic Ringdown
ASG	Access Services Group
ASR	Access Service Request
AST	Automatic Scheduled Testing
ATM	Asynchronous Transfer Mode
AT&TC	American Telephone and Telegraph Communications, Inc.
BAN	Billing Account Number
BHMC	Busy Hour Minutes of Capacity
BP	Billing Percentage
BSA	Basic Serving Arrangement
BSE	Basic Service Element
CAC	Carrier Access Code
CCS	Centum Call Seconds
CCSA	Common Control Switching Arrangement(s)
CDL	Customer Designated Location
CDM	Call Days in Month
CFA	Connecting Facility Assignment
CIC	Carrier Identification Code
CIP	Carrier Identification Parameter
CLO	Control Link Oscillator
CMF	Chargeable Minimum Factor
CNM	Customer Network Management Optional Feature
COMPS	Central Office Maintenance Planning System
Cont'd	Continued
CSM	Customer Service Management Optional Feature
CST	Cooperative Scheduled Testing
CSU	Circuit Switching Unit
C-TISC	Conversion Time-In-Service Credit

© 2022 Frontier Communications Parent, Inc. All rights reserved..

FACILITIES FOR INTERSTATE ACCESS

EXPLANATION OF ABBREVIATIONS (Cont'd)

DA	Digital Data Access
DAM	Distance in Airline Miles
dB	Decibel
dBm	Decibels below one milliwatt
dBmO	Transmission Level Referred to the Zero Transmission Level Point
dBrnCO	Decibel Reference Noise C Message Weighted O
dBv	Decibels Referred to One Volt
dc	direct current
DDS	Digital Data Service
DTM	Direct TL1 Monitoring Optional Feature
DTMF	Dual Tone Multifrequency
DX	Duplex
DWDM	Dense Wave Division Multiplexing
ECCKT	Exchange Carrier Circuit ID
ELEPL	Equal Level Echo Path Loss
E&M	The Receive and Transmit Leads of a Signaling System
EML	Expected Measured Loss
EPL	Echo Path Loss
ERL	Echo Return Loss
ESCON	Enterprise Systems CONnection
f	frequency
FCC	Federal Communications Commission
FCO	Foreign Central Office Service
FIA	Facilities for Interstate Access
FICON	Fibre CONnection
FNPA	Foreign Numbering Plan Area
GTOC	Operating Telephone Companies of GTE Corporation
GSEC	General Services and Equipment Code
HC	High Capacity
HNPA	Home Numbering Plan Area
Hz	Hertz
IA	Interface Arrangement
IC	Interexchange Carrier
ICB	Individual Case Basis
IDDD	International Direct Distance Dialing
ILP	Initial Liability Period
IP	Interconnection Point
ISC	InterSystem Channel
kbps	kilobits per second
kHz	kilohertz
LATA	Local Access and Transport Area
LEC	Local Exchange Carrier

© 2022 Frontier Communications Parent, Inc. All rights reserved..

FACILITIES FOR INTERSTATE ACCESS

EXPLANATION OF ABBREVIATIONS (Cont'd)

Ma	Milliamperes
Mbps	Megabits per second
MHz	Megahertz
MJU	Multi Junction Unit
MRC	Monthly Recurring Charge
MST	Manual Scheduled Testing
MTL	Maximum Termination Liability
NA	Not Available
NANP	North American Numbering Plan
NDP	National Discount Plan
NECA	National Exchange Carrier Association
N-MSA	Non Qualifying Metropolitan Statistical Area
NMM	Network Management Methods
NG-ADM	Next Generation Add/Drop Multiplexing
NPA	Numbering Plan Area
NRC	Nonrecurring Charge
NST	Nonscheduled Testing
NXX	Three Digit Central Office Codes'
OC-n	Optical Carrier Rate
OPS	Off Premises Station
PBX	Private Branch Exchange
PCM	Pulse Code Modulation
PON	Purchase Order Number
POT	Point of Termination
RMC	Recurring Monthly Charge
rms	root mean square
RPON	Related Purchase Order Number

© 2022 Frontier Communications Parent, Inc. All rights reserved..

FACILITIES FOR INTERSTATE ACCESS

EXPLANATION OF ABBREVIATIONS (Cont'd)

SAL	Special Access Line
SASG	Special Access Service Guarantee
SCFA	Secondary Connecting Facility Assignment
SED	Service Establishment Date
SF	Single Frequency
SLA	Service Level Agreement
SONET	Synchronous Optical Network
SPNP	Service Provider Number Portability
SRL	Singing Return Loss
STR	Switched Transport Rate
STS1	Synchronous Transport Signal 1
STS1-nV	Synchronous Transport Signal 1 with Virtual Concatenation
TDCF	Total Day Conversion Factor
TISC	Time-In-Service Credit
TLP	Transmission Level Point
TV	Television
TVP	Term Volume Plan
UL	Under Utilization Liability
VG	Voice Grade
V&H	Vertical & Horizontal
WATS	Wide Area Telecommunications Service

© 2022 Frontier Communications Parent, Inc. All rights reserved..

FACILITIES FOR INTERSTATE ACCESS

EXPLANATION OF ABBREVIATIONS (Cont'd)
STATE ABBREVIATIONS

AL Alabama
AK Alaska
AR Arkansas
AZ Arizona
CA California
CO Colorado
CT Connecticut
DE Delaware
FL Florida
GA Georgia
HI Hawaii
IA Iowa
ID Idaho
IL Illinois
IN Indiana
KS Kansas
KY Kentucky
LA Louisiana
MA Massachusetts
MD Maryland
ME Maine
MI Michigan
MN Minnesota
MO Missouri
MS Mississippi
MT Montana
NE Nebraska
NC North Carolina
ND North Dakota
NH New Hampshire
NJ New Jersey
NM New Mexico
NV Nevada
NY New York
OH Ohio
OK Oklahoma
OR Oregon
PA Pennsylvania
RI Rhode Island
SC South Carolina
SD South Dakota
TN Tennessee
TX Texas
UT Utah
VA Virginia
VT Vermont
WA Washington
WI Wisconsin
WV West Virginia
WY Wyoming

© 2022 Frontier Communications Parent, Inc. All rights reserved..

FACILITIES FOR INTERSTATE ACCESS

REFERENCE TO OTHER TARIFFS

Whenever reference is made in this Guide to other tariffs, the reference is to the tariffs in force as of the effective date of this Guide, and to amendments thereto and successive issues thereof.

The following tariff is referenced in this Guide and may be obtained from the National Exchange Carrier Association, 80 South Jefferson Road, Whippany, NJ 07981-1009, 800-228-8597, or on the Internet at www.neca.org.

National Exchange Carrier Association, Inc. (NECA)
Tariff F.C.C. No. 4

REFERENCE TO OTHER PUBLICATIONS

The following technical publications are referenced in this Guide and may be obtained from the National Exchange Carrier Association, Inc., 80 South Jefferson Road, Whippany, NJ 07981-1009 or in electronic format on the Internet at www.neca.org.

PUB AS No. 1, ISSUE II Access Service
Issued: May 1984

PUB AS No. 1, ISSUE II Access Service Addendum
Issued: March 1987

The following technical publications are referenced in this Guide and may be obtained from Testmark Labs, 3050 Harrodsburg Rd., Lexington, Kentucky 40503.

GTE Technical Interface Reference Manual, Issue 2; Sections 3300, 6000, 6103, and 7000
Issued: August 1984, Revised December 1985, August 1986, and October 1988

GTE Telephone Companies - Traffic Grade of Service Standards
Issued: April 1985; entire issue

The following technical publications are referenced in this Guide and may be obtained from the Alliance for Telecommunications Industry Solutions (ATIS), 1200 G Street NW, Suite 500, Washington, DC 20005, or on the Internet at www.atis.org.

Multiple Exchange Carrier Access Billing (MECAB) Guidelines,
ATIS/OBF – MECAB 009, Issue 9
Issued: January 2007

Multiple Exchange Carrier Ordering and Design (MECOD) Guidelines,
ATIS – 0404120-0007, Issue 7
Issued: April 2009

© 2022 Frontier Communications Parent, Inc. All rights reserved..

FACILITIES FOR INTERSTATE ACCESS

REFERENCE TO OTHER PUBLICATIONS (Cont'd)

The following technical publications are referenced in this Guide and may be obtained from Telcordia Technologies Inc., Customer Service, One Telcordia Drive, RRC 1B-180, Piscataway, NJ 08854-4156, 866-672-6997, or on the Internet at www.telcordia.com.

GR-63-CORE, Issue 3
Issued: March 2006

GR-253-CORE, Issue 4
Issued: December 2005

GR-320-CORE, Issue 1
Issued: August 2003

GR-487-CORE, Issue 3
Issued: April 2009

GR-499-CORE, Issue 3
Issued: September 2004

GR-905-CORE, Issue 11
Issued: December 2008

GR-1089-CORE, Issue 4
Issued: June 2006

GR-1149-CORE, Issue 7
Issued: December 2008

GR-1312-CORE, Issue 3
Issued: April 1999

GR-1374-CORE, Issue 1
Issued: December 1994

© 2022 Frontier Communications Parent, Inc. All rights reserved..

REFERENCE TO OTHER PUBLICATIONS (Cont'd)

GR-1400-CORE, Issue 3
Issued: July 2006

GR-2918-CORE, Issue 6
Issued: January 2003

GR-2979-CORE, Issue 5
Issued: March 2005

Network Equipment Building System (NEBS), SR-3580, Issue 3
Issued: June 2007

SR-TAP-000191, Issue 2
Issued: December 1989

The following technical publications are referenced in this Guide and may be obtained from American National Standards Institute (ANSI), 25 West 43rd Street, 4th Floor, New York, NY 10036 or on the Internet at www.ansi.org.

ANSI T1.102 - 1993 (R2005) Digital Hierarchy Electrical Interfaces Issued: 2005

ANSI T1.105.01 – 2000 (R2005) Synchronous Optical Network (SONET) - Basic Description Including Multiplex Structure, Rates and Formats Issued: 2005

ANSI T1.107 – 2002 (R2006) Digital Hierarchy - Format Specifications Issued: 2006

ANSI INCITS 148-1998 (R2004) Information Systems - Fiber Distributed Data Interface (FDDI) - Token Ring Physical Layer Protocol (PHY) Issued: 2004

ANSI INCITS 166-1989 (R2005) Information Systems - Fibre Data Distributed Interface (FDDI) - Token Ring Physical Layer Medium Dependent (PMD) Issued: 2005

ANSI INCITS 296-1997 (R2007) Information Technology – Single-Byte Command Code Sets Connection (SBCON) Architecture Issued: 2007

ANSI INCITS 303 – 1998 (R2003) Third Generation Fibre Channel Physical and Signaling Interface-3 (FC-PH-3) Issued: 2003

© 2022 Frontier Communications Parent, Inc. All rights reserved..

FACILITIES FOR INTERSTATE ACCESS

REFERENCE TO OTHER PUBLICATIONS (Cont'd)

The following technical publications are referenced in this Guide and may be obtained from the Institute of Electrical and Electronics Engineers, Inc., IEEE Standards Association, 445 Hoes Lane, PO Box 1331, Piscataway, NJ, 08855-1331, or on the Internet at www.ieee.org.

IEEE 802.3-2005/Cor2/D2.0-2007 Telecommunications and information exchange between systems-Local and Metropolitan Area Networks-Specific Requirements-Part 3
Issued: August 2007

IEEE 802.3u-1995 Supplement to Standard for Information Technology-Local and Metropolitan Area Networks, Part 3
Issued: October 1995

IEEE 802.3z-1998 Supplement to Standard for Information Technology-Local and Metropolitan Area Networks, Part 3
Issued: 1998

IEEE 802.3ae-2002 Supplement to Standard for Information Technology-Local and Metropolitan Area Networks, Part 3
Issued: August 2002

The following technical publications are referenced in this Guide and may be obtained from the Internet Engineering Task Force (IETF) at IETF Secretariat, c/o Association Management Solutions, LLC (AMS), 48377 Fremont Blvd., Suite 117, Fremont, California 94538, or on the Internet at www.ietf.org.

STD 0001, Internet Official Protocol Standards, J. Postel, Editor
Issued: May 2008

RFC 2138, Remote Authentication Dial-In User Service (RADIUS), C. Rigney, A. Rubens, W. Simpson, S. Willens
Issued: April 1997

The following publications are referenced in this Guide and may be obtained from the Government Printing Office, Superintendent of Documents, Document Control Branch, 941 N. Capitol St., N.E., Washington, D.C. 20401.

Telecommunications Service Priority (TSP) System for National Security Emergency Preparedness (NSEP) Service Vendor Handbook, National Communications System (NCS) H 3-1-2
Issued: December 2000

Telecommunication Service Priority (TSP) System for National Security Emergency Preparedness (NSEP) Service User Manual, National Communications System (NCS) M 3-1-1
Issued: May 2000

© 2022 Frontier Communications Parent, Inc. All rights reserved..

FACILITIES FOR INTERSTATE ACCESS

REFERENCE TO OTHER PUBLICATIONS (Cont'd)

The following technical publication is referenced in this Guide and may be obtained from the Society of Motion Picture and Television Engineers (SMPTE), 3 Barker Avenue, 5th Floor, White Plains, NY 10601, (914)761-1100, or on the Internet at www.smpte.org.

SMPTE 0259M-2008
Issued: 2008

The following publications referenced in this Guide may be obtained from IBM North America, 590 Madison Avenue, New York, NY 10022; 1-800-426-4968 or on the Internet at www.ibm.com/us. Note: ESCON® is a registered trademark of the International Business Machines (IBM) Corporation.

Enterprise Systems Architecture/390 ESCON I/O Interface, Physical Layer (Seventh Edition)
SA23-0394-06 Issued: July 2008
Coupling Facility Channel Physical Layer (Sixth Edition)
SA23-0395-05 Issued: July 2008
S/390 Time Management and IBM 9037 Sysplex Timer
SG24-2070-00 Issued: May 1999
Planning Fiber Optic Channel Links (Thirteenth Edition)
GA23-0367-12 Issued: July 2009
OS/390 Parallel Sysplex Configuration Volume 2: Cookbook
SG24-5638-00 Issued: August 2000

The following technical publications are referenced in this Guide and may be obtained from International Telecommunications Union (ITU), Place des Nations, CH-1211, Geneva 20, Switzerland or on the Internet at www.itu.int.net

Optical Interfaces for Multichannel Systems with Optical Amplifiers, ITU-T G.692
Issued: October 1998, Amendment 1 January 2005

Optical Transport Network Physical Layer Interfaces, ITU-T G.959.1
Issued: December 2003

© 2022 Frontier Communications Parent, Inc. All rights reserved..

FACILITIES FOR INTERSTATE ACCESS

REFERENCE TO OTHER PUBLICATIONS (Cont'd)

The following technical publication is referenced in this Guide and may be obtained from Frontier Carrier Services, 1919 McKinney Ave, Dallas, TX 75201. (T)

Technical Memorandum for Incidental InterLATA Call Management Signaling Service associated with the Verizon FCC Short Term Notice of Network Change
Issued: March 2007

The following technical publication is referenced in this Guide and may be obtained from Telcordia Routing Administration, 8 Corporate Place PYA 3N-141, Piscataway, NJ 08854-4156, 1(866) 672-4156.

The Local Exchange Routing Guide (LERG)
Issued: August 1, 2009, and as issued from time to time

The following publication is referenced in this Guide and may be obtained from the COMM 2000, 1414 Brook Drive, Downers Grove, IL 60515 (888)-UL33503 or on the Internet at www.comm-2000.com.

UL 94, Edition 5Issued: October 1996

The following technical publication is referenced in this Guide and may be obtained from the Telecommunications Industry Association, 2500 Wilson Blvd., Suite 300, Arlington, VA 22201.

Electrical Performance for Television Transmission Systems (EIA/TIA-250-C)
Issued: February 1990

© 2022 Frontier Communications Parent, Inc. All rights reserved..

FACILITIES FOR INTERSTATE ACCESS

1. APPLICATION OF TARIFF

1.1 This Guide contains regulations, rates and charges applicable to Special Access, Ethernet Private Line Access Service and other miscellaneous services, hereinafter referred to collectively as service(s)or, in combination, as Facilities for Interstate Access, hereinafter referred to as FIA, provided by the issuing carriers of this Guide, hereinafter referred to as the Telephone Company to customers. This Guide further provides for Ancillary and Miscellaneous Services. This Guide does not apply to other services offered by the Telephone Company.

1.2 Regulations, rates and charges as specified in this Guide apply to FIA and shall not serve as a substitute for IC guide offerings of services to end users. The provision of such FIA by the Telephone Company as set forth in this Guide does not constitute a joint undertaking with an IC for the furnishing of any service.

1.3 References in this Guide to a Special Construction Tariff refers to the following tariff as effective in its respective territories:

TARIFF F.C.C. NO. 7	for Frontier California Inc., Frontier Florida LLC, and Frontier Southwest Incorporated.

© 2022 Frontier Communications Parent, Inc. All rights reserved..

2. GENERAL REGULATIONS

2.1 Undertaking of the Telephone Company

2.1.1 Scope

(A) The Telephone Company does not undertake to transmit calls or offer a telecommunications service under this Guide.

(B) The Telephone Company shall be responsible only for the installation, operation, and maintenance of the services which it provides.

(C) The Telephone Company will, for maintenance purposes, test its FIA only to the extent necessary to detect and/or clear troubles. Testing beyond normal parameters will be done as described in Section 6.

(D) FIA are provided twenty-four hours daily, seven days per week.

2.1.2 Limitations

(A) The customer may not assign or transfer the use of FIA provided under this Guide except that, where there is no interruption of use or relocation of the FIA, such assignment or transfer may be made to:

- another customer, whether an individual, partnership, association or corporation, provided the assignee or transferee assumes all outstanding indebtedness for such FIA, and the unexpired portion of the minimum period and the termination liability applicable to such FIA, if any; or

- a court appointed receiver, trustee or other person acting pursuant to law in bankruptcy, receivership, reorganization, insolvency, liquidation or other similar proceedings, provided the assignee or transferee assumes the unexpired portion of the minimum period and the termination liability applicable to such FIA, if any.

In all cases of assignment or transfer, the written acknowledgment of the Telephone Company is required prior to such assignment or transfer which acknowledgment shall be made within 15 days from the receipt of notification. All regulations and conditions contained in this Guide shall apply to such assignee or transferee. The assignment or transfer of FIA does not relieve or discharge the assignor or transferor from remaining jointly or severally liable with the assignee or transferee for any obligations existing at the time of the assignment or transfer.

© 2022 Frontier Communications Parent, Inc. All rights reserved..

2. GENERAL REGULATIONS (Cont'd)

2.1 Undertaking of the Telephone Company (Cont'd)

2.1.2 Limitations (Cont'd)

(B) The emergency provisioning and restoration of FIA shall be in accordance with Part 64, Subpart D, Paragraph 64.401, of the FCC's Rules and Regulations, which specifies the priority system for such activities. Section 6.4 describes the service arrangement.

(C) The Telephone Company does not warrant that its facilities and services meet standards other than those in this Guide.

2.1.3 Liability

(A) The Telephone Company's liability, if any, for willful misconduct is not limited by this Guide. With respect to any other claim or suit by a customer for damages associated with the installation, provision, termination, maintenance, repair or restoration of FIA, and subject to the provisions of (B) and (C), the Telephone Company's liability, if any, shall not exceed an amount equal to the proportionate charge for the FIA for the period during which the provision of FIA was affected. This liability for damages shall be in addition to any amounts that may otherwise be due the customer under this Guide as a credit allowance for a provision of FIA interruption.

(B) The Telephone Company shall not be liable for any act or omission of any other carrier or customer providing a portion of a service, nor shall the Telephone Company, for its own act or omission, hold liable any other carrier or customer providing a portion of a service.

(C) The Telephone Company shall be indemnified, defended and held harmless by the customer against any claim, loss or damage arising from the use of FIA offered under this Guide. The foregoing indemnity shall issue on the customer separately, each being responsible for its own acts and omissions, involving:

- Claims for libel, slander, invasion of privacy, or infringement of copyright arising from any communications

- Claims for patent infringement arising from combining or using the FIA furnished by the Telephone Company in connection with facilities or equipment furnished by the customer; or

- All other claims arising out of any act or omission of the customer in the course of using FIA provided pursuant to this Guide.

© 2022 Frontier Communications Parent, Inc. All rights reserved..

2. GENERAL REGULATIONS (Cont'd)

2.1 Undertaking of the Telephone Company (Cont'd)

2.1.3 Liability (Cont'd)

(D) The Telephone Company does not guarantee or make any warranty with respect to its FIA when used in an explosive atmosphere. The Telephone Company shall be indemnified, defended and held harmless by the customer from any and all claims by any person relating to the FIA so provided. The foregoing indemnity shall issue on the customer separately, each being responsible for its own acts and omissions.

(E) Except in the case of willful misconduct, under no circumstances whatever shall the Telephone Company be liable for indirect, incidental, special or consequential damages; and this disclaimer shall be effective notwithstanding any other provisions hereof.

(F) No license under patents is granted by the Telephone Company to the customer or shall be implied or arise by estoppel in the customer's favor with respect to any circuit, apparatus, system or method used by the customer in connection with FIA provided under this Guide. With respect to claims of patent infringement made by third persons, the Telephone Company will defend, indemnify, protect and save harmless the customer from and against all claims arising out of the use by the customer of FIA provided under this Guide.

(G) The Telephone Company's failure to provide or maintain FIA under this Guide shall be excused by labor difficulties, governmental orders, civil commotions, acts of God and other circumstances beyond the Telephone Company's reasonable control, subject to the interruption allowance provisions.

(H) The Telephone Company shall reimburse the customer for damages to premises or equipment of the customer resulting from the provision of FIA by the Telephone Company on such premises, or by the installation or removal thereof, caused by the negligence or willful act of the Telephone Company.

© 2022 Frontier Communications Parent, Inc. All rights reserved..

2. GENERAL REGULATIONS (Cont'd)

2.1 Undertaking of the Telephone Company (Cont'd)

2.1.4 Provision of FIA

(A) The Telephone Company, to the extent that such FIA are or can be made available with reasonable effort, and after provisions have been made for the Telephone Company's local service, will provide to the customer, upon reasonable notice, FIA offered in other applicable sections of this Guide at rates and charges specified therein.

(B) FIA provided to a customer under this Guide may be connected directly to customer facilities and/or may be connected to access facilities of another telephone company or companies in the joint provision of interstate access.

2.1.5 Installation and Termination of FIA

Except as provided for Expanded Interconnection Service specified in Section 17, the FIA provided under this Guide (A) will include any entrance cable or drop wiring and wire or intrabuilding cable to that point where provision is made for termination of the Telephone Company's outside distribution network facilities at a suitable location inside a customer designated location, and (B) will be installed by the Telephone Company to such point of termination.

2.1.6 Maintenance of FIA

(A) The FIA provided under this Guide shall be maintained by the Telephone Company. The customer or others may not rearrange, move, disconnect, remove or attempt to repair any FIA provided by the Telephone Company, other than by connection or disconnection to any interface means used, except with the written consent of the Telephone Company.

(B) Customer provided transmission facilities and equipment terminating in the Telephone Company wire center, access tandem, manhole or similar location for purposes of virtual Expanded Interconnection Service (EIS), as set forth in Section 17, will be maintained by the Telephone Company. Customer provided transmission facilities and equipment terminating in the Telephone Company wire center or access tandem for purposes of physical EIS will not be maintained by the Telephone Company.

© 2022 Frontier Communications Parent, Inc. All rights reserved..

2. GENERAL REGULATIONS (Cont'd)

2.1 Undertaking of the Telephone Company (Cont'd)

2.1.7 Changes and Substitutions

Except as provided for equipment and systems subject to Part 68 of the FCC Rules and Regulations in 47 C.F.R. Paragraph 68.110 (b), the Telephone Company may, where such action is reasonably required in the operation of its business, substitute, change, or rearrange any telephone plant used in providing FIA under this Guide, change minimum network protection criteria, change operating or maintenance characteristics of facilities, or change operations or procedures of the Telephone Company. In case of any such substitution, change or rearrangement, the facility parameters will be within generally accepted standards. The Telephone Company shall not be responsible if any such substitution, change or rearrangement renders any customer furnished services obsolete or requires modification or alteration thereof or otherwise affects their use or performance. If such substitution, change, or rearrangement materially affects the operating characteristics or technical parameters of the FIA, as originally ordered by the customer, the Telephone Company will notify the customer in writing prior to making such substitution, change or rearrangement. Notification will be given as follows:

- Should a major change occur, the Telephone Company shall notify the customer at least one year in advance. A major change is described as any change in telephone plant which will affect the technical parameters of the interface (e.g., level, impedance, signaling, interface, bandwidth, two-wire, four-wire, etc.).

- Should a minor change occur, the Telephone Company shall notify the customer at least thirty days in advance. A minor change is described as any change in telephone plant which will not affect the technical parameters of the interface (e.g., level, impedance, signaling, interface, bandwidth, two-wire, four-wire, etc.).

The Telephone Company will work cooperatively with the customer relative to the redesign and implementation required by the change in operating characteristics.

© 2022 Frontier Communications Parent, Inc. All rights reserved..

2. GENERAL REGULATIONS (Cont'd)

2.1 Undertaking of the Telephone Company (Cont'd)

2.1.8 Discontinuance and Refusal of FIA

(A) Unless the provisions of 2.2.1(B) or 2.5.1 apply, if the customer fails to comply with the provisions of 2.1.6, 2.3.1, and 2.4.1(D), or if applicable, 2.5.3, 2.5.4, 17.3.4 and 17.7.6(D) including any payments to be made by it on the dates or at the times herein specified, and fails within thirty (30) days after written notice, by certified mail, from the Telephone Company to a person designated by the customer to correct such noncompliance, the Telephone Company may discontinue the provision of the FIA to the noncomplying customer. In case of such discontinuance, all applicable charges shall become due.

(B) If the customer repeatedly fails to comply with the provisions of this Guide in connection with the provision of a FIA or group of FIA, and fails to correct such course of action after notice as in (A), the Telephone Company may refuse applications for additional FIA to the noncomplying customer until the course of action is corrected.

(C) In addition to and not in limitation of the provisions of 2.1.8(A) and 2.1.8(B), unless the provisions of 2.2.1(B) or 2.5.1 following apply, if a customer fails to comply with 2.4.1(A) or 2.4.1(D) following, including any bill payments to be made by it on the dates and times herein specified, the Telephone Company may take the actions specified in sections 2.1.8(A) and 2.1.8(B) with regard to services provided hereunder to that customer on fifteen (15) calendar days written notice, such notice period to start the day after the notice is sent by Overnight Delivery, if the customer has not complied with respect to amounts due in a subject bill and either:

© 2022 Frontier Communications Parent, Inc. All rights reserved..

2. GENERAL REGULATIONS (Cont'd)

2.1 Undertaking of the Telephone Company (Cont'd)

2.1.8 Discontinuance and Refusal of FIA (Cont'd)

(C) (Cont'd)

(1) the Telephone Company has sent the subject bill to the customer within seven (7) business days from the bill date: or

(2) the Telephone Company has sent the subject bill to the customer more than thirty (30) calendar days before the notice under this section is given.

In all other cases, the Telephone Company will give thirty (30) calendar days written notice pursuant to 2.1.8 (A) or 2.1.8(B). The Telephone Company will maintain records sufficient to validate the date upon which a bill was sent to a customer. Action will not be taken as specified in 2.1.8(A) or 2.1.8(B) with regard to the subject bill if the customer cures the noncompliance prior to the expiration of the fifteen (15) or thirty (30) days' notice period, as applicable.

(D) If the Telephone Company provided notice pursuant to 2.1.8(A), (B), or (C) preceding, does not refuse additional applications for FIA service or discontinue the provision of the FIA services on the date specified, and the customer's noncompliance continues, nothing contained herein shall preclude the Telephone Company's right to refuse additional applications for FIA service or to discontinue the provision of the FIA services, including the provision of Physical or Virtual Expanded Interconnection services.

(E) If notice is given by Overnight Delivery under this section, it shall be performed by a reputable overnight delivery service such as, or comparable to, the U.S. Postal Service Express Mail, United Parcel Service, or Federal Express.

(F) The provisions of 2.1.8(A), (B), or (C) shall not apply to charges that customer does not pay based on submission of a good faith dispute pursuant 2.4.1(D)(2).

© 2022 Frontier Communications Parent, Inc. All rights reserved..

2. GENERAL REGULATIONS (Cont'd)

2.1 Undertaking of the Telephone Company (Cont'd)

2.1.9 Preemption of FIA

In certain instances, i.e., when spare facilities and/or equipment are not available, it may be necessary to preempt existing services to provision or restore National Security Emergency Preparedness (NSEP) Services. If, in its best judgment, the Telephone Company deems it necessary to preempt, then the Telephone Company will ensure that:

(A) A sufficient number of public switched services are available for public use if preemption of such services is necessary to provision or restore NSEP Service.

(B) The service(s) preempted have a lower or do not contain NSEP assigned priority levels.

(C) A reasonable effort is made to notify the preempted service customer of the action to be taken.

(D) A credit allowance for any preempted service shall be made in accordance with the provisions in Section 2.8.1.1.

2.1.10 Limitation of Use of Metallic Facilities

Except for loop and duplex (DX) type signaling, metallic facilities shall not be used for ground return or split pair operation. Signals applied to the metallic facility shall conform to minimum protection criteria for direct electrical connections as in Part 68 of the FCC Rules and Regulations.

© 2022 Frontier Communications Parent, Inc. All rights reserved..

2. GENERAL REGULATIONS (Cont'd)

2.2 Use

2.2.1 Interference or Impairment

(A) The characteristics and methods of operation of any circuits, facilities or equipment provided by other than the Telephone Company, including customer transmission equipment and facilities used with EIS, and associated with the FIA provided under this Guide shall not interfere with or impair service over any facilities of the Telephone Company, its connecting and concurring carriers, or other telephone companies involved in its services, cause damage to their plant, impair the privacy of any communications carried over their facilities or create hazards to their employees or to the public.

(B) Except as provided for equipment or systems subject to Part 68 of the FCC Rules and Regulations in 47 C.F.R. Paragraph 68.108, if such characteristics or methods of operation are not in accordance with (A), the Telephone Company will, where practicable, notify the customer, as appropriate, that temporary discontinuance of the use of FIA may be required; however, where prior notice is not practicable, nothing contained herein shall be deemed to preclude the Telephone Company's right to temporarily discontinue forthwith the use of FIA if such action is reasonable in the circumstances. In case of such temporary discontinuance the customer will be promptly notified and afforded the opportunity to correct the condition which gave rise to the temporary discontinuance. During such period of temporary discontinuance, credits as set forth in Section 2.8 following, are not applicable.

2.2.2 Unlawful Use of FIA

The FIA are furnished subject to the condition that they will not be used for an unlawful purpose. FIA will be discontinued if any law enforcement agency, acting within its apparent jurisdiction, advises in writing that such FIA are being used in violation of law. The Telephone Company will refuse to furnish FIA when it has reasonable grounds to believe that such FIA will be used in violation of law.

© 2022 Frontier Communications Parent, Inc. All rights reserved..

2. GENERAL REGULATIONS (Cont'd)

2.2 Use (Cont'd)

2.2.3 Commingling

Except as provided in Section 51.318 of the Federal Communications Commission's rules, telecommunications carriers who obtain unbundled network elements or combinations of unbundled network elements pursuant to a Statement of Generally Available Terms, under Section 252 of the Act, or pursuant to an interconnection agreement with the Telephone Company, may connect, combine, or otherwise attach such unbundled network elements or combinations of unbundled network elements to access services purchased under this Guide except to the extent such agreement (1) expressly prohibits such commingling; or (2) does not address commingling and the requesting carrier has not negotiated an interconnection agreement (or amendment) expressly permitting such commingling. The rates, terms and conditions of this Guide will apply to the access services that are commingled. Unbundled network elements or combinations of unbundled network elements that are commingled with access services do not constitute a shared use arrangement as set forth in this Guide, and are therefore not eligible for adjustment of charges under such provisions.

© 2022 Frontier Communications Parent, Inc. All rights reserved..

2. GENERAL REGULATIONS (Cont'd)

2.3 Obligation of the Customer

2.3.1 Damages

The customer shall reimburse the Telephone Company for damages to the Telephone Company facilities utilized to provide FIA under this Guide caused by:

- the negligence or willful act of the customer, or
- resulting from the customer's improper use of the Telephone Company facilities, or
- due to malfunction of any facilities or equipment provided by other than the Telephone Company.

Nothing in the foregoing provision shall be interpreted to hold one customer liable for another customer's actions. The Telephone Company will, upon reimbursement for damages, cooperate with the customer in prosecuting a claim against the person causing such damage and the customer shall be subrogated to the right of recovery by the Telephone Company for the damages to the extent of such payment. The amount of reimbursement shall be the actual cost of repair to the damaged facilities including labor costs as specified in 6.2(G).

2.3.2 Theft

The customer shall reimburse the Telephone Company for any loss through theft of facilities, apparatus, or equipment utilized to provide FIA under this Guide at the customer designated location or at the end user's premises. The amount of reimbursement shall be the actual cost for replacement of facilities, apparatus, or equipment lost, plus labor costs as specified in 6.2(G).

2.3.3 Equipment Space and Power

Except as specified in 2.3.4, the customer shall furnish or arrange to have furnished to the Telephone Company at no charge, equipment space and electrical power required by the Telephone Company to provide FIA under this Guide at the points of termination of such FIA. The equipment space provided shall meet industry standard environmental conditions. The selection of ac or dc power shall be mutually agreed to by the customer and the Telephone Company. The customer shall also make necessary arrangements in order that the Telephone Company will have access to such spaces at reasonable times for installing, repairing or removing facilities of the Telephone Company.

© 2022 Frontier Communications Parent, Inc. All rights reserved..

2. GENERAL REGULATIONS (Cont'd)

2.3 Obligation of the Customer (Cont'd)

2.3.4 Space and Power for Expanded Interconnection Service

Where available, the Telephone Company shall make available wire center or access tandem floor space and electrical power required by the customer for the provision of Expanded Interconnection Service at charges set forth in Section 17.

2.3.5 Availability for Testing

The FIA provided under this Guide shall be available to the Telephone Company at times mutually agreed upon in order to permit the Telephone Company to make tests and adjustments appropriate for maintaining the FIA in satisfactory operating condition. Such tests and adjustments shall be completed within a reasonable time. No credit will be allowed for any interruptions involved during such tests and adjustments.

2.3.6 Balance

All signals for transmission over the FIA provided under this Guide shall be delivered by the customer balanced to ground except for ground start and duplex (DX) and McCulloh-loop (alarm system) type signaling.

2.3.7 Design of Customer Services

Subject to the provisions of 2.1.7, the customer shall be solely responsible at its expense for the overall design of its services. The customer shall be responsible at its own expense, for any redesigning or rearrangement of its services which may be required because of changes in FIA, operations or procedures of the Telephone Company, minimum network protection criteria or operating or maintenance characteristics of the FIA.

2.3.8 References to Telephone Company

The customer may advise its end users that certain FIA are provided by the Telephone Company in connection with the service the customer furnishes to its end user; however, the customer shall not represent that the Telephone Company jointly participates in the customer's services.

© 2022 Frontier Communications Parent, Inc. All rights reserved..

2. GENERAL REGULATIONS (Cont'd)

2.3 Obligation of the Customer (Cont'd)

2.3.9 Claims and Demands for Damages

(A) With respect to claims of patent infringement made by third persons, the customer shall defend, indemnify, protect and save harmless the Telephone Company from and against all claims arising out of the combining with, or use in connection with, the FIA provided under this Guide, any circuit, apparatus, system or method provided by the customer, the IC or its end users.

(B) The customer shall defend, indemnify and save harmless the Telephone Company from and against suits, claims, and demands by third persons arising out of the construction, installation, operation, maintenance, or removal of the customer's circuits, facilities, or equipment connected to the Telephone Company's FIA provided under this Guide including, without limitation, Workmen's Compensation claims, actions for infringement of copyright and/or unauthorized use of program material, libel and slander actions based on the content of communications transmitted over the customer's circuits, facilities or equipment, and proceedings to recover taxes, fines, or penalties for failure of the customer to obtain or maintain in effect any necessary certificates, permits, licenses or other authority to acquire or operate the FIA provided under this Guide; provided, however, the foregoing indemnification shall not apply to suits, claims, and demands to recover damages for damage to property, death, or personal injury unless such suits, claims or demands are based on the tortuous conduct of the customer, its officers, agents or employees.

2.3.10 Coordination With Respect to Network Contingencies

The customer shall, in cooperation with the Telephone Company, coordinate in planning the actions to be taken to maintain maximum network capability following natural or man-made disasters which affect telecommunications services.

© 2022 Frontier Communications Parent, Inc. All rights reserved..

2. GENERAL REGULATIONS (Cont'd)

2.4 Payment Arrangements

2.4.1 Payment of Charges and Deposits

(A) The Telephone Company may, in order to safeguard its interests, require a customer, which has a proven history of late payments to the Telephone Company or does not have established credit, to make a deposit prior to or at any time after the provision of the FIA to the customer to be held by the Telephone Company as a guarantee of the payment of rates and charges. The Telephone Company will notify the customer of a deposit requirement by Overnight Delivery. The customer will be required to make payment of such deposit prior to the provision of service in those cases where the customer has not established credit with the Telephone Company, or otherwise within fifteen (15) business days of such notice. Such notice to start the day after the notice is sent by Overnight Delivery. No such deposit will be required of a customer which is a successor of a company which has established credit and has no history of late payments to the Telephone Company.

A deposit may not exceed the actual or estimated rates and charges for the FIA for a two month period. The fact that a deposit has been made in no way relieves the customer from complying with the Telephone Company's regulations as to the prompt payment of bills.

At such time as the provision of the FIA to the customer is terminated, the amount of the deposit will be credited to the customer's account and any credit balance which may remain will be refunded. After the customer has established a one year prompt payment record, such a deposit will be refunded or credited to the customer account at any time prior to the termination of the provision of the FIA to the customer.

In case of a cash deposit, for the period the deposit is held by the Telephone Company, the customer will receive simple annual interest at the percentage rate specified in the Telephone Company General and/or Local Tariff.

(B) Where the provision of FIA requires construction of facilities in order to satisfy a customer's request for service, Special Construction charges as described in Section 3.1.3 following may apply.

© 2022 Frontier Communications Parent, Inc. All rights reserved..

2. GENERAL REGULATIONS (Cont'd)

2.4 Payment Arrangements (Cont'd)

2.4.1 Payment of Charges and Deposits (Cont'd)

(C) The Telephone Company shall bill FIA services on a current basis for (a) all charges incurred, (b) applicable taxes, and (c) credits due the customer.

- Switched Access (except for the Entrance Facility, Direct-Trunked Transport and Multiplexing elements), Ancillary and Miscellaneous services shall be billed in arrears.

- Special Access, monthly EIS elements, Switched Access Entrance Facility, Direct-Trunked Transport and Multiplexing elements shall be billed in advance except for the charges and credits associated with the initial or final bills. The initial bill will also include charges for the actual period of service up to, but not including, the bill date. The unused portion of the FIA already billed will be credited on the final bill.

The customer will receive its bill in: 1) a standard paper format, 2) a paper format bill summary with an electronic transmission to provide the detailed information of the bill, or 3) a storage device (CD ROM). Such bills are due when rendered regardless of the media utilized. Adjustments for the quantities of FIA established or discontinued in any billing period beyond the minimum period in 2.4.2 will be prorated to the number of days based on a 30 day month. The Telephone Company will, upon request and if available, furnish such detailed information as may reasonably be required for verification of any bill.

© 2022 Frontier Communications Parent, Inc. All rights reserved..

2. GENERAL REGULATIONS (Cont'd)

2.4 Payment Arrangements (Cont'd)

2.4.1 Payment of Charges and Deposits (Cont'd)

(D) All bills to the customer are due 31 days (payment date) after the bill date or by the next bill date (i.e., same date in the following month as the bill date), whichever is the shortest interval. In the event the customer does not remit payment in immediately available funds by the payment date, the FIA may be discontinued as specified in 2.1.8.

(1) If the entire amount billed is not received by the Telephone Company in immediately available funds by the payment date, an additional charge (late payment charge) equal to 1/365th of the percentage rate for deposit interest as that in 2.4.1(A) of the unpaid balance will be applied for each day or portion thereof that an outstanding balance remains.

If such payment date would cause payment to be due on a Saturday, Sunday or Holiday (i.e., New Year's Day, Independence Day, Labor Day, Thanksgiving Day, Christmas Day, the second Tuesday in November and a day when Washington's Birthday, Memorial Day or Columbus Day is legally observed), payment for such bills will be due from the customer as follows:

- If such payment date falls on a Saturday or on a Holiday which is observed on Tuesday, Wednesday, Thursday or Friday, the payment date shall be the last non-Holiday day preceding such Saturday or Holiday.

- If such payment date falls on a Sunday or on a Holiday which is observed on a Monday, the payment date shall be the first non-Holiday day following such Sunday or Holiday.

© 2022 Frontier Communications Parent, Inc. All rights reserved..

2. GENERAL REGULATIONS (Cont'd)

2.4 Payment Arrangements (Cont'd)

2.4.1 Payment of Charges and Deposits (Cont'd)

(D) (Cont'd)

(2) In the event of a billing dispute, the customer must submit a documented claim for the disputed amount. A good faith dispute requires the customer to provide a written claim to the Telephone Company. Instructions for submitting a dispute can be obtained by calling the billing inquiry number shown on the customer's bill, or, by accessing the Telephone Company website also shown on the customer's bill. Such claim must identify in detail the basis for the dispute, and if the customer withholds disputed amounts, it must identify the account number under which the bill has been rendered, the date of the bill and the specific items on the bill being disputed, to permit the Telephone Company to investigate the merits of the dispute.

(C)

(3) If the customer pays the bill in full by the payment due date,and later initiates a billing dispute, penalty interest may be applicable.

(C)

- If the billing dispute is resolved in favor of the customer, the customer shall receive a credit from the Telephone Company equal to the disputed amount resolved in the customer's favor times the percentage rate in (1) above. This percentage credit amount will apply from the date of the customer's payment through the date on which the credit is posted to the customer's account.

If the dispute is resolved in favor of the Telephone Company, neither a late payment charge nor a penalty interest charge is applicable.

© 2022 Frontier Communications Parent, Inc. All rights reserved..

FACILITIES FOR INTERSTATE ACCESS2. GENERAL REGULATIONS (Cont'd)

2.4 Payment Arrangements (Cont'd)

2.4.1 Payment of Charges and Deposits (Cont'd)

(D) (Cont'd)

(C)

(C)

(5) Late Payment Charges applicable to End User FIA, described in Section 13, are those in the Telephone Company General and/or Local Tariffs.

© 2022 Frontier Communications Parent, Inc. All rights reserved..

2. GENERAL REGULATIONS (Cont'd)

2.4 Payment Arrangements (Cont'd)

2.4.2 Minimum Periods

(A) The minimum periods for which FIA are provided and which rates and charges are applicable are in 3.2.4.

(B) The minimum periods for which FIA are provided and which rates and charges are applicable for Specialized FIA or Arrangements provided on an Individual Case Basis, as in Section 7 are established with the individual case filing.

(C) For discontinuances of FIA with a one month minimum period, all applicable charges for the one month period will apply. In instances where the minimum period is greater than one month, however, the charge will be the lesser of the Telephone Company's non-recoverable costs less the net salvage value for the discontinued service of the minimum period charges.

(D) The minimum periods for which Expanded Interconnection Services are provided and which rates and charges are applicable are in Section 17.

(E) The minimum periods for Optical Networking Services are provided and which rates and charges are applicable are in Section 20.

2.4.3 Cancellation of an ASR

Provisions for the cancellation of an ASR are in 3.2.6.

© 2022 Frontier Communications Parent, Inc. All rights reserved..

2. GENERAL REGULATIONS (Cont'd)

2.5 Connections

2.5.1 General

Equipment and systems (i.e., terminal equipment, multiline terminating systems, and communications systems) may be connected with Switched and Special Access furnished by the Telephone Company where such connection or interconnection is made in accordance with the provisions specified in the NECA Technical Reference Publication AS No. 1, Issue II and in 2.1 preceding.

2.5.2 Standard Access Service Connections

Access services are provided by means of wire, fiber optics, radio or any other suitable technology or a combination thereof. Special Access service connections are made directly or through a Telephone Company hub where bridging or multiplexing functions are performed. These connections can either be analog or digital.

© 2022 Frontier Communications Parent, Inc. All rights reserved..

2. GENERAL REGULATIONS (Cont'd)

2.6 Definitions

Certain terms used herein are defined as follows:

Access Area

The term "Access Area" denotes a specific calling area containing those customers served by one or more Central Offices associated with the various Switched Access provisions offered under this Guide. The size and configuration of the Access Area a customer obtains is dependent upon the Feature Group type and the specific characteristics of the Central Office or Access Tandem office to which the connection is made.

Access Code

The term "Access Code" applies to Switched Access Service. It denotes a uniform seven digit code dialed by an end user to access an Interexchange Carrier's facilities. The Carrier Access Code (CAC) has the form 101XXXX and the Carrier Identification Code (CIC) has the form 950-XXXX.

Access Group

The term "Access Group" denotes a grouping of lines or trunks used to establish a connection between switching systems. Each grouping of lines or trunks is traffic engineered as a unit with each of the individual members of the group having identical characteristics and being interchangeable with any other member of the group.

Access Minutes

The term "Access Minutes" denotes that usage of exchange facilities in interstate or foreign service for the purpose of calculating chargeable usage. On the originating end of an interstate or foreign call, usage is measured from the time the originating End User's call is delivered by the Telephone Company to and acknowledged as received by the customer's facilities connected with the originating exchange. On the terminating end of an interstate or foreign call, usage is measured from the time the call is received by the End User in the terminating exchange. Timing of usage at both originating and terminating ends of an interstate or foreign call shall terminate when the calling or called party disconnects, whichever event is recognized first in the originating and terminating end exchanges, as applicable. For the calculation of total minutes, seconds are totaled and converted to minutes before rounding occurs. Remainder seconds greater than 29 are rounded to a minute.

© 2022 Frontier Communications Parent, Inc. All rights reserved..

2. GENERAL REGULATIONS (Cont'd)

2.6 Definitions (Cont'd)

Access Service Request

The term "Access Service Request" (ASR) denotes a document (i.e., order) used by the Telephone Company to process a customer's request for Access Services as offered throughout this Guide.

Access Tandem

The term "Access Tandem" denotes a telephone company switching system that provides a traffic concentration and distribution function for inter LATA traffic originating from or terminating at end offices in the access area.

Add/Drop Multiplexing

The term "Add/Drop Multiplexing" denotes a multiplexing function that allows lower level signals to be added or dropped with the remaining traffic continuing through the network.

Agent

The term "Agent" as used in Section 6 of this Guide, is defined as that person or entity that the Telephone Company acknowledges as controlling decisions pertaining to Pay telephone Service or, that person or entity duly authorized to act in that capacity by the physical owner of the premises.

Aggregator

The term "Aggregator" denotes any individual, partnership, association, joint-stock company, trust or corporation that, in the ordinary course of its operations, makes telephones available to the public or to transient users of its premises, for interstate telephone calls using a provider of operator services.

Alternate Billing Service

The term "Alternate Billing Service (ABS)" denotes the ability of the end user to bill calls to an account not necessarily associated will the originating line, including calling card, collect and third number billing.

© 2022 Frontier Communications Parent, Inc. All rights reserved..

2. GENERAL REGULATIONS (Cont'd)

2.6 Definitions (Cont'd)

Answer/Disconnect Supervision

The term "Answer/Disconnect Supervision" denotes the transmission of the switch trunk equipment supervisory signal (off-hook or on-hook) to the CDL for terminating calls to the Telephone Company end office as an indication that the called party has answered or disconnected.

Answer Message

The term "Answer Message" denotes an SS7 message sent in the backward direction to indicate that the call has been answered.

Attempt

The term "Attempt" denotes a call in the originating direction from an end user to the CDL which is completed (answered) or not completed (not answered) and a call in the terminating direction from the CDL to a customer which is completed (Answered) or not completed (not answered).

Attenuation Distortion

The term "Attenuation Distortion" denotes the difference in loss at specified Frequencies relative to the loss at 1004 Hz.

Balance (100-Type) Test Line

The term "Balance (100-Type) Test Line" denotes a standard feature of FGA, FGB, FGD, 800, 888 Access Service, BSA-A, BSA-B, and BSA-D and refers to the end office termination provided for balance and noise testing. The termination provides off-hook supervision to the calling end, and terminates the line or trunk in a resistive and capacitive arrangement which simulates the characteristic impedance of the end office.

Basic Service Element

The term "Basic Service Element (BSE)" denotes an unbundled service option available only with Basic Serving Arrangements.

© 2022 Frontier Communications Parent, Inc. All rights reserved..

2. GENERAL REGULATIONS (Cont'd)

2.6 Definitions (Cont'd)

Basic Serving Arrangement

The term "Basic Serving Arrangement (BSA)" denotes a category of Switched Access Service differentiated by technical characteristics, e.g., line side versus trunk side connection at the Telephone Company's first point of switching.

BHMC

See Busy Hour Minutes of Capacity.

Billed Number Screening

The term "Billed Number Screening (BNS)" denotes the process of utilizing a line information data base to determine billing number acceptance for collect and third number calls and to perform public telephone line number checks to prevent the alternate billing of calls to public coin telephone lines.

Bit

The term "Bit" denotes the smallest unit of information in the binary system of notation.

Bridging

The term "Bridging" denotes the connection of one or more circuits in parallel with another circuit without interrupting the continuity of the first circuit.

Bridging Wire Center

The term "Bridging Wire Center" denotes the telephone company designated wire center in which bridging is accomplished.

Business Day

The term "Business Day" denotes the times of day that a company is open for business. Generally, in the business community, these are 8:00 or 9:00 a.m. to 5:00 or 6:00 p.m., respectively, with an hour for lunch, Monday through Friday, resulting in a standard forty (40) hour work week.

© 2022 Frontier Communications Parent, Inc. All rights reserved..

2. GENERAL REGULATIONS (Cont'd)

2.6 Definitions (Cont'd)

Busy Hour Minutes of Capacity

The term "Busy Hour Minutes of Capacity" (BHMC) denotes the trunk group usage load consisting of the average usage load for the busy season.

Busy Season

The term "Busy Season" denotes the four consecutive weeks of the calendar year having the highest daily busiest hour traffic load based on a five day week. Normally the five day week consists of Monday through Friday. Where weekend traffic is greater than weekday traffic, one or both weekend days may be used as a substitute for a weekday as long as a consistent five day week is maintained for the four consecutive weeks.

Bit

The term "Bit" denotes a binary digit, the smallest unit of information in the binary system of notation.

Byte

The term "Byte" denotes a sequence or group of eight bits that represents one character.

Carrier Identification Code

The term "Carrier Identification Code" (CIC) denotes the uniform access code associated with a specific Interexchange Carrier.

Carrier Identification Parameter

The term "Carrier Identification Parameter" (CIP) denotes a field in the SS7 Initial Address Message (IAM) that identifies and transmits CIC information in a forward direction to an IC customer.

C Conditioning

The term "C Conditioning" denotes a telephone company special treatment of the transmission path in order to control attenuation and envelope delay distortion.

© 2022 Frontier Communications Parent, Inc. All rights reserved..

2. GENERAL REGULATIONS (Cont'd)

2.6 Definitions (Cont'd)

C Message Noise

The term "C Message Noise" denotes the frequency weighted average noise within an idle voice circuit. The frequency weighting, called C message, is used to simulate the frequency characteristic of the 500 type telephone set and the hearing of the average subscriber.

C Notched Noise

The term "C Notched Noise" denotes the frequency weighted noise on a voice circuit with a holding tone, which is removed at the measuring end through a notch (very narrow band) filter.

CCS

The term "CCS" denotes a hundred call seconds which is a standard unit of traffic load that is equal to 100 seconds of usage or capacity of a group of lines or trunks.

Call

The term "Call" denotes a communication including an off hook signal and routing information initiated at the originating location and completed to a terminating location.

Call Branding

Call Branding is the act of providing customer identification, audibly and distinctly, to the caller at the beginning of a Preferred Directory Assistance call.

Cellular Mobile Carrier (CMC)

The term "Cellular Mobile Carrier (CMC)" denotes a Common Carrier authorized by the Federal Communications Commission to provide cellular mobile radio telecommunications services.

Central Office

The term "Central Office" denotes a telephone company local switching system where telephone company local service subscriber station loops are terminated for purposes of interconnection to each other and to trunks.

© 2022 Frontier Communications Parent, Inc. All rights reserved..

2. GENERAL REGULATIONS (Cont'd)

2.6 Definitions (Cont'd)

Central Office Loop Around Test Line

The term "Central Office Loop Around Test Line" denotes equipment in the Telephone Company's end office which provides a means for making two way transmission tests for Switched Access services. These transmission tests are normally for the measurement of level and noise tests. This arrangement has two terminations, each reached by means of a separate seven digit number.

Central Office Prefix

The term "Central Office Prefix" denotes the first three digits (NXX) of the telephone number assigned to a telephone company subscriber's local service.

Centralized Automatic Reporting on Trunks (CAROT) Testing

The term "Centralized Automatic Reporting on Trunks (CAROT) Testing" denotes a type of testing which includes the capacity for measuring the 1000 Hz loss, C message weighted noise, C notched noise, loss slope, and the provision of a balance termination.

Channelize

The term "Channelize" denotes the process of multiplexing demultiplexing circuits using analog or digital techniques.

Circuit

The term "Circuit" denotes an electrical or photonic, in the case of fiber optic based transmission systems, communications path between two or more points of termination.

Circuit Code

The term "Circuit Code" denotes the service class routing of an SS7 call that indicates the interexchange carrier trunk group to which the traffic will be routed (e.g., 0+, 0-, 500, 900, etc.).

Common Channel Signaling System 7 Network (CCS7)

The term "Common Channel Signaling System 7 Network (CCS7)" denotes a dedicated out-of-band signaling network which utilizes Signaling System 7 (SS7) protocol to provide call handling and data base access services.

© 2022 Frontier Communications Parent, Inc. All rights reserved..

2. GENERAL REGULATIONS (Cont'd)

2.6 Definitions (Cont'd)

Common Line

The term "Common Line" denotes a line, trunk, coin line or other facility provided under the Telephone Company General and/or Local Tariffs, terminated on a Central Office switch. A Common Line Residence is a line or trunk provided under the residence regulations of the Telephone Company General and/or Local Tariffs. A Common Line Business is a line or trunk provided under the business regulations of the Telephone Company General and/or Local Tariffs. A coin line is a line provided under the public and/or semi-public service regulations of the Telephone Company General and/or Local Tariffs.

Communications System

The term "Communications System" denotes circuits and other facilities which are capable of communications between terminal equipment provided by other than the Telephone Company or Telephone Company stations.

Competitive County (N)

The term “Competitive County” denotes the geographic unit of a county or county-equivalent that passes or has passed a competitive market test specified by the FCC. Competitive County also denotes a county or county-equivalent that failed a competitive market test specified by the FCC, but was granted Phase II, Level 2 pricing flexibility prior to June 1, 2017. (N)

Concatenated

The term "Concatenated" denotes the linking together of various data structures, e.g., two bandwidths joined to form a single bandwidth.

Confirmed ASR

The term "Confirmed ASR" denotes a customer's ASR for a) Switched Access FIA which the Telephone Company has processed with the Engineering Department to confirm for the customer and the Telephone Company the availability of facilities and/or equipment, and b) Special Access FIA for which the Telephone Company confirms to the customer that the established due date can be met. The date the ASR is confirmed, the standard service date interval commences.

Confirming Design Layout Report Date

The term "Confirming Design Layout Report (CDLR) Date" identifies the date that the Telephone Company is scheduled to receive confirmation that the Design Layout Report provided by the Telephone Company for a confirmed ASR is acceptable.

© 2022 Frontier Communications Parent, Inc. All rights reserved..

2. GENERAL REGULATIONS (Cont'd)

2.6 Definitions (Cont'd)

Connecting Facility Assignment (M)

The term “Connecting Facility Assignment” denotes the identification of a channel or circuit to be used from a high capacity facility. (M)

Conventional Signaling

The term "Conventional Signaling" denotes the inter machine signaling system which has been traditionally used in North America for the purpose of transmitting the called number's address digits from the originating end office to the switching machine which will terminate the call. In this system, all of the dialed digits are received by the originating switching machine, a path is selected, and the sequence of supervisory signals and outpulsed digits is initiated. No overlap outpulsing, ten digit ANI, ANI information digits, or acknowledgement wink are included in this signaling sequence.

Customer

The term "Customer" denotes any individual, partnership, association, joint stock company, trust, corporation, or governmental entity or any other entity which subscribes to the services offered under this Guides

Customer Designated Location

The term "Customer Designated Location" (CDL) denotes a location specified by the customer for the purpose of terminating FIA services. The Telephone Company must have access to the location to perform installation, testing, and maintenance functions. The customer may or may not have access to the location. CDLs include locations such as customer premises, end user premises, customer repeater stations, customer microwave towers, a Telephone Company's first point of switching, some other point where Telephone Company testing can occur, etc. A CDL may be designated by the customer for Switched Access, Special Access, or both in combination. Customer transmission facilities and equipment may be terminated in Telephone Company wire centers or access tandems under EIS arrangements, as defined in Section 17. Telephone Company Switched and Special Access Services may be interconnected to such customer equipment using Cross Connect arrangements as described in Section 4.5.3 and Section 5.1.1(D), respectively.

D Conditioning

The term "D Conditioning" denotes a Telephone Company special treatment of the transmission path in order to control C notched noise and intermodulation distortion.

Certain material on this page formerly appeared on Page 28.

© 2022 Frontier Communications Parent, Inc. All rights reserved..

2. GENERAL REGULATIONS (Cont'd)

2.6 Definitions (Cont'd)

Daily Busiest Hour

The term "Daily Busiest Hour" denotes the highest usage hour for each day with the reading taken on the clock hour or half hour. The clock hour or half hour selection varies from day to day, depending upon the usage measured. The Daily Busiest Hour is also known as the Bouncing Busy Hour.

Data Transmission (107 Type) Test Line

The term "Data Transmission (107 Type) Test Line" denotes an arrangement which provides for the connection to a signal source which provides test signals for one way testing of data and voice transmission parameters.

Disconuance Non-Recurring Charge (C)

In addition to any other charges associated with discontinuance of services, the Telephone Company will charge a discontinuance non-recurring charge to disconnect services. This charge applies on a per circuit basis. (C)

Drop Cable

A facility provided by the Telephone Company which connects the broadband feeder cable to the premises of the customer's subscribers for the purposes of Video Channel Services.

Dual Tone Multifrequency Address Signaling

The term "Dual Tone Multifrequency (DTMF) Address Signaling" denotes a type of signaling that is an optional feature of FGA and BSA-A. It may be utilized when FGA or BSA-A is being used in the terminating direction. An office arranged for signaling would expect to receive address signals from the IC in the form of DTMF format.

Echo Path Loss

The term "Echo Path Loss" denotes the measure of reflected signal at a four wire interface without regard to the send and receive Transmission Level Point (TLP).

Echo Return Loss

The term "Echo Return Loss" denotes a frequency weighted measure of return loss over the middle of the voiceband (approximately 500 to 2500 Hz) where talker echo is most annoying.

© 2024 Frontier Communications Parent, Inc. All rights reserved..

2. GENERAL REGULATIONS (Cont'd)

2.6 Definitions (Cont'd)

End Office Switch

The term "End Office Switch" denotes a Telephone Company local switching system located in a wire center where Telephone Company local service subscriber station loops are terminated for purposes of originating and terminating traffic to or from a customer.

End User

The term "End User" means any customer of an interstate or foreign telecommunications service that is not a carrier, except that a carrier, other than the Telephone Company, shall be deemed to be an "end user" to the extent that such carrier uses a telecommunications service for administrative purposes, and a person or entity that offers telecommunications services exclusively as a reseller shall be deemed to be an "end user" if all resale transmissions offered by such reseller originate on the premises of such reseller (e.g., hotels, motels and shared tenant services).

Engineering Review

The term "Engineering Review" denotes the examination of an ASR with a customer requested change to determine if a design change is required. It includes, but is not limited to, the review for possible change requirements in equipment, interfaces, circuit configurations, engineering records, and billing.

Entry Switch

See First Point of Switching.

Excess Capacity

The term "Excess Capacity" denotes a quantity of FIA requested by the customer which is greater than that which the Telephone Company would construct to fulfill the customer's ASR.

© 2022 Frontier Communications Parent, Inc. All rights reserved..

2. GENERAL REGULATIONS (Cont'd)

2.6 Definitions (Cont'd)

Exchange

The term "Exchange" denotes a unit generally smaller than a Local Access and Transport Area (LATA), established by the Telephone Company for the administration of communications service in a specified area which usually embraces a city, town or village and its environs. It consists of one or more central offices together with the associated facilities used in furnishing communications service within that area. One or more designated exchanges comprise a given LATA.

Exchange Access Signaling

The term "Exchange Access Signaling" denotes the signaling system used by end offices to transmit originating information and address digits to the customer's premises and includes the means of verifying the receipt of these address digits. Features of this system include overlap outpulsing (in suitably equipped end offices), identification of the type of call, identification of the ten digit telephone number of the calling party, and acknowledgement wink supervisory signals.

Existing Suitable Space

The term "Existing Suitable Space" denotes a space in which ac/dc power, heat and air conditioning, battery and generator back-up power, and other requirements necessary for provision of wire center or access tandem equipment currently exists.

Exit Message

The term "Exit Message" denotes an SS7 message sent to an end office by the Telephone Company tandem switch to mark the connect time when the Telephone Company's tandem switch sends an Initial Address Message to a customer.

Extended Area Service

The term "Extended Area Service" (EAS) denotes an arrangement whereby a customer in one exchange can call a local number in another exchange that is part of the extended area without paying a toll charge.

Extensible Markup Language (XML)

The term "Extensible Markup Language" (XML) denotes a simple, very flexible text format that is used in the exchange of a wide variety of data on the Web and elsewhere.

© 2022 Frontier Communications Parent, Inc. All rights reserved..

2. GENERAL REGULATIONS (Cont'd)

2.6 Definitions (Cont'd)

Facility

The term facility denotes generically the various transmission media used for the transmission of telecommunication services. This includes, but is not limited to, cable (copper pair, coaxial, and fiber optic) and microwave radio equipment.

Firm Order Confirmation Date

The term "Firm Order Confirmation (FOC) Date" denotes the date that the Telephone Company will provide the schedule of dates for the provisioning activities associated with the customer's request for service.

First Point of Switching

The term "First Point of Switching" denotes either the first telephone company location at which switching occurs on the terminating path of a call proceeding from the CDL to the terminating end office or the last telephone company location at which switching occurs on the originating path of a call proceeding from the originating end office to the CDL.

Flexible Automatic Number Identification (FLEX ANI)

The term "Flexible Automatic Number Identification" denotes an optional feature or Basic Service Element that provides additional values for the information indicator digits available with the ANI feature on originating calls. These additional digits identify the type of line that is originating the call for billing, screening and routing purposes.

Four Wire to Two Wire Conversion

The term "Four Wire to Two Wire Conversion" denotes an arrangement which converts a four wire transmission path to a two wire transmission path to allow a four wire facility to terminate in a two wire entity such as a central office switch trunk circuit or switching system.

Frame

The term "Frame" denotes a group of data bits, in a specific format, with a flag at either end to indicate the beginning and end of the frame. The defined format enables network equipment to recognize the meaning and purpose of specific bits.

© 2022 Frontier Communications Parent, Inc. All rights reserved..

2. GENERAL REGULATIONS (Cont'd)

2.6 Definitions (Cont'd)

Geographically Aggregated Rate (GAR)

The term "Geographically Aggregated Rate" denotes a situation in which the rates and charges for a service offering, for which there is currently no demand, are developed based upon the aggregated revenue requirement and demand for more than one study area. Upon receipt of a request for service, the current geographically averaged rates will be redeveloped to include the new study area.

Example: Study areas A, B and C have been geographically aggregated. Geographically averaged rates for A and B were developed based upon their aggregated revenue requirement and demand, while Area C, marked "GAR", has no current demand. Should C receive a request for service, the current geographically averaged rates will be redeveloped to include C's revenue and demand. The redeveloped rates and charges will now be applicable to customers on A, B and C.

Ground Start Supervisory Signaling

The term "Ground Start Supervisory Signaling" denotes a type of signaling which provides for the application of ground on the tip side at the point of termination (assuming no signaling conversion has been provided by the Telephone Company) as an initial seizure signal before the application of ringing in the originating direction (towards the customer from the end office).

Head-End

The Telephone Company location where analog video and audio signals are received from the customer for transmission over the broadband distribution facilities to subscribers for the purposes of providing Video Channel Services.

Immediately Available Funds

The term "Immediately Available Funds" denotes a corporate or personal check drawn on a bank account and funds which are available for use by the receiving party on the same day on which they are received and includes U.S. Federal Reserve bank wire transfers, U.S. Federal Reserve notes (paper cash), U.S. coins, U.S. Postal Money Orders, and New York Certificates of Deposit.

© 2022 Frontier Communications Parent, Inc. All rights reserved..

2. GENERAL REGULATIONS (Cont'd)

2.6 Definitions (Cont'd)

Individual Case Basis

The term "Individual Case Basis" (ICB) denotes a condition where the regulations, if applicable, rates and charges for an offering under the provisions of this Guide are developed based on the circumstances in each case.

Information Service Provider

The term "Information Service Provider" denotes one who offers a capability for generating, acquiring, storing, transforming, processing, retrieving, utilizing, or making available information which may be conveyed via telecommunications, except that such service does not include (1) any use of any such capability for the management, control, or operation of a telecommunications system or the management of a telecommunications service, or (2) the provision of time, weather, and such other similar audio services that are offered by the Telephone Company.

Initial Address Message (IAM)

The term "Initial Address Message (IAM)" denotes an SS7 message sent in the forward direction to initiate trunk set up with the busying of an outgoing trunk which carries the information about that trunk along with other information relating to the routing and handling of the call to the next switch.

Installed Cost

The term "Installed Cost" denotes the total cost (estimated or actual) by the Telephone Company to provide facilities for the offered services.

Interconnection

The term "Interconnection" denotes the termination of a customer's basic transmission facilities, including optical terminating equipment and multiplexers at or near Telephone Company wire center or access tandem. Interconnection is provided as physical or virtual.

Interconnection Point

The term "Interconnection Point" denotes physical EIS arrangements as the point where the customer-owned cable facilities connect to the Telephone Company termination equipment. The interconnection point for virtual EIS arrangements is the demarcation between ownership of the cable facilities.

© 2022 Frontier Communications Parent, Inc. All rights reserved..

2. GENERAL REGULATIONS (Cont'd)

2.6 Definitions (Cont'd)

Interexchange Carrier (IC) or Interexchange Common Carrier

The terms "Interexchange Carrier" (IC) or "Interexchange Common Carrier" denote any individual, partnership, association, joint stock company, trust, governmental entity or corporation engaged for hire in interstate or foreign communication by wire or radio, between two or more LATAs.

Intermodulation Distortion

The term "Intermodulation Distortion" denotes a measure of the nonlinearity of a circuit. It is measured using four tones, and evaluating the ratios (in dBs) of the transmitted composite four tone signal power to the second order products of the tones (R2), and the third order products of the tones (R3).

Interstate Communications

The term "Interstate Communications" denotes both interstate and foreign communications.

Intrastate Communications

The term "Intrastate Communications" denotes any communications within a state subject to oversight by a state regulatory commission as provided by the laws of the state involved.

Local Area Network (LAN)

A network permitting the interconnection and intercommunication of a group of computers, primarily for the sharing of resources such as data storage devices and printers.

Line

The term "Line" denotes a communications path connecting an end office switch with an end user's premises or a CDL for the provision for FGA or BSA-A.

Line Group

The term "Line Group" denotes a grouping of lines which are traffic engineered as a unit for the establishment of connections between end office switches and customers in which all of the communications paths are interchangeable.

© 2022 Frontier Communications Parent, Inc. All rights reserved..

2. GENERAL REGULATIONS (Cont'd)

2.6 Definitions (Cont'd)

Line Information Data Base

The term "Line Information Data Base (LIDB)" denotes a data base containing billing validation data providing the ability to screen billed numbers to support Alternate Billing services.

Line Side Connection

The term "Line Side Connection" denotes a connection of a transmission path to the line side of an end office system.

Local Access and Transport Area

The term "Local Access and Transport Area" (LATA) denotes a geographic area for the provision and administration of communications service. It encompasses designated Access Areas which are grouped to serve common social, economic, and other purposes.

Maximum Termination Liability

The term "Maximum Termination Liability" (MTL) denotes the maximum amount of money for which the customer is liable in the event all FIA ordered in an Individual Case Basis (ICB) arrangement are discontinued before a specified period of time.

Metropolitan Statistical Area (MSA)

The term “Metropolitan Statistical Area (MSA)” denotes a prescribed geographic area comprised of Telephone Company Wire Centers which has been grouped together.

Mid Link

The term "Mid Link" denotes the Special Transport facilities between Hub Wire Centers where the circuit is bridged and/or where switching devices such as a loop transfer arrangement are located.

Milliwatt (102 Type) Test Line

The term "Milliwatt (102 Type) Test Line" denotes an arrangement in an end office which provides a 1004 Hz tone at 0 dBm0 for one way transmission measurements towards the CDL from the Telephone Company end office.

© 2022 Frontier Communications Parent, Inc. All rights reserved..

2. GENERAL REGULATIONS (Cont'd)

2.6 Definitions (Cont'd)

Mobile Telephone Switching Office (MTSO)

The term "Mobile Telephone Switching Office (MTSO)" denotes a Cellular Mobile Carrier (CMC) switching facility that is used to originate or terminate calls on the CMC network, or originate or terminate calls between the CMC and the public switched telephone network.

Multicarrier Access Area

The term "Multicarrier Access Area" denotes an EAS for FGA and BSA-A or an area for FGB and BSA-B where FIA Services are provided by more than one telephone company in which a customer obtains access to an entire EAS or FGB or BSA-B area by obtaining a FGA or BSA-A, or FGB or BSA-B access tandem arrangement that connects its switch with the First Point of Switching of the Primary Exchange Carrier.

National Security Emergency Preparedness (NSEP) Services

The term "National Security Emergency Preparedness (NSEP) Services" denotes telecommunications services which are used to maintain a state of readiness or to respond to and manage any event or crisis (local, national or international), which causes or could cause injury or harm to the population, damage to or loss of property, or degrades or threatens the NSEP posture of the United States.

Native Ethernet

The term “Native Ethernet” denotes an Ethernet transmission that is not carried within a SONET signal.

Net Salvage

The term "Net Salvage" denotes the estimated scrap, sale, or trade in value, less the estimated cost of removal. Cost of removal includes the costs of demolishing, tearing down, removing, or otherwise disposing of the material and any other applicable costs. Because the cost of removal may exceed salvage, facilities may have negative net salvage.

Network Address

The term "Network Address" denotes the alphanumeric character string used to specify the destination of each switched connection made within the network.

© 2022 Frontier Communications Parent, Inc. All rights reserved..

2. GENERAL REGULATIONS (Cont'd)

2.6 Definitions (Cont'd)

Network Channel Interface Code

The "Network Channel Interface" code (NCI) is an ordering code that provides an indication of the generic channel type. The NCI code provides the technical characteristics of the interface and describes the physical and electrical characteristics of the special access interface to the customer designated locations. A complete description and listing of these interface codes is specified in Section 6103 of the GTE Technical Interface Reference Manual.

Node

The term "Node" denotes a SONET ring service element that designates either a customer designated location or a Telephone Company wire center location on the SONET ring. It also denotes the location/address of where a channelized service originates or terminates on a ring.

Non-Competitive County (N)

The term “Non-Competitive County” denotes the geographic unit of a county or county-equivalent that failed a competitive market test specified by the FCC (excluding those that were granted Phase II, Level 2 pricing flexibility prior to June 1, 2017 and thus are defined as “Competitive Counties”). (N)

Non Overlap Outpulsing

The term "Non Overlap Outpulsing" is the feature of the exchange access signaling system which provides initiation of pulsing to the customer's premises after the calling subscriber has completed dialing an originating call.

Nonrecoverable Cost

The term "Nonrecoverable Cost" denotes the cost of specially constructed facilities for which the Telephone Company has no foreseeable use should the customer terminate service.

Nonsynchronous Test Line

The term "Nonsynchronous Test Line" denotes an arrangement in step by step end offices which provides operational tests which are not as complete as those provided by the synchronous test lines, but which can be made more rapidly.

North American Numbering Plan

The term "North American Numbering Plan" denotes a three digit area or Numbering Plan Area (NPA) code and a seven digit telephone number made up of a three digit Central Office code (NXX) plus a four digit station number (XXXX).

© 2022 Frontier Communications Parent, Inc. All rights reserved..

2. GENERAL REGULATIONS (Cont'd)

2.6 Definitions (Cont'd)

NSEP Treatment

The term "NSEP Treatment" denotes the provisioning of a telecommunications service before others based on the provisioning priority level assigned by the Executive Office of the President.

Octet

The term "Octet" denotes a group of eight binary digits operated upon as an entity.

Off Hook

The term "Off Hook" denotes the active condition of Switched Access or a Telephone Company local service line.

On Hook

The term "On Hook" denotes the idle condition of Switched Access or a Telephone Company local service line.

Open Circuit Test Line

The term "Open Circuit Test Line" denotes an arrangement in an end office which provides an ac open circuit termination of the trunk or line by means of an inductor of several Henries.

Optical Carrier Rate (OC-N)

The term "OC-N" denotes an Ethernet Private Line transmission signal, speed, line rate, or service and may be commonly referred to as follows:

OC-N Rate	Bandwidth Capacity
OC-1	51.84 Mbps
OC-3	155.52 Mbps
OC-12	622.08 Mbps
OC-24	1.25 Gbps
OC-48	2.488 Gbps

Order Interval

The term "Order Interval" denotes the interval between the Scheduled Issue Date and the Service Date.

© 2022 Frontier Communications Parent, Inc. All rights reserved..

2. GENERAL REGULATIONS (Cont'd)

2.6 Definitions (Cont'd)

Originating Direction

The term "Originating Direction" denotes the use of Switched Access for the origination of calls from an end user to a CDL.

Originating Point Code

The term "Originating Point Code (OPC)" denotes the identity assigned to each Operator Service System (OSS) location.

Overlap Outpulsing

The term "Overlap Outpulsing" is the feature of the exchange access signaling system which permits initiation of pulsing to the customer's premises before the calling subscriber has completed dialing an originating call.

OZZ Code

The term "OZZ Code" denotes the service class routing code of a multifrequency (MF) call that indicates the interexchange carrier trunk group to which the traffic will be routed (e.g., 0+, 0-, 500, 900, etc.).

Payload

The term "Payload" denotes the portion of the SONET signal available to carry service signals such as DS0, DS1, and DS3.

Physical EIS

The term "Physical EIS" denotes an offering that enables customers to place equipment needed to terminate basic transmission facilities, including optical terminating equipment and multiplexers, within or upon the Telephone Company's wire center or Telephone Company access tandem buildings, use such equipment to connect customer's fiber optic systems or microwave radio transmission facilities (where reasonably feasible) with the local exchange carrier's equipment and facilities used to provide interstate switched and special access services.

Plant Test Date

The term "Plant Test Date" denotes the date on which installation is completed and the Telephone Company to customer testing can begin.

© 2022 Frontier Communications Parent, Inc. All rights reserved..

2. GENERAL REGULATIONS (Cont'd)

2.6 Definitions (Cont'd)

Point of Termination

The term "Point of Termination" denotes the point of demarcation at a CDL or end user premises at which the Telephone Company's responsibility for the provision of FIA Service ends.

Premises

The term "Premises" denotes a building or buildings on continuous property (except Railroad Right of Way, etc.) not separated by a public highway.

Pre service Testing

The term "Pre service Testing" denotes tests performed on a FIA to assure standard transmission performance/parameters meet specifications prior to acceptance testing.

Primary Exchange Carrier

The term "Primary Exchange Carrier" (PEC) denotes the telephone company in whose exchange a customer's first point of switching (i.e., dial tone for FGA or BSA-A, an access tandem for FGB or BSA-B) is located.

Protocol

The term "Protocol" denotes a set of rules governing the format to be followed when transmitting information between communicating devices.

Public Pay Telephone

The term "Public Pay Telephone" denotes a switched coin line provided under the Public Telephone Service regulations of the Telephone Company General Exchange and/or Local Exchange Tariffs.

Query

The term "Query" denotes a Signaling System 7 (SS7) message requesting specific information from a data base.

© 2022 Frontier Communications Parent, Inc. All rights reserved..

2. GENERAL REGULATIONS (Cont'd)

2.6 Definitions (Cont'd)

Recoverable Cost

The term "Recoverable Cost" denotes the cost of specially constructed facilities for which the Telephone Company has a foreseeable reuse, either in place or elsewhere should the customer terminate service.

Registered Equipment

The term "Registered Equipment" denotes the customer's terminal equipment which complies with or has been approved within the Registration Provisions of Part 68 of the FCC Rules and Regulations.

Release Message

The term "Release Message" denotes an SS7 Message sent in either direction to indicate that a specific circuit is being released.

Response

The term "Response" denotes an SS7 message representing a reply to a request for information contained in a query.

Route Mileage

The term "Route Mileage" denotes the actual Telephone Company provided facility mileage of a transmission circuit.

Scheduled Issue Date

The term "Scheduled Issue Date" denotes the date the Telephone Company is scheduled to issue the confirmed ASR to all associated work groups.

© 2022 Frontier Communications Parent, Inc. All rights reserved..

2. GENERAL REGULATIONS (Cont'd)

2.6 Definitions (Cont'd)

Secondary Exchange Carrier

The term "Secondary Exchange Carrier" (SEC) denotes the telephone company in whose exchange a customer does not subscribe to FGA or BSA-A, or FGB or BSA-B service, but from whose exchange the customer's end users can call the interexchange switch or CDL of an IC in the primary exchange of another telephone company on a toll free basis.

Secure Socket Layer (SSL)

The term "Secure Socket Layer (“SSL)" denotes a security protocol that provides data encryption, server authentication, message integrity, and optional client authentication for a TCP/IP connection.

Semi Public Pay Telephone

The term "Semi Public Pay Telephone" denotes a switched coin line provided under the Semi Public Telephone Service regulations of the Telephone Company General and/or Local Tariffs.

Service Control Point

The term "Service Control Point (SCP)" denotes an SS7 network control interface element between the Telephone Company's SS7 network and one or more data bases.

Service Date

The term "Service Date" denotes the date that the FIA is to be placed in service. A confirmed ASR is required to establish a service date.

© 2022 Frontier Communications Parent, Inc. All rights reserved..

2. GENERAL REGULATIONS (Cont'd)

2.6 Definitions (Cont'd)

Service Switching Point (SSP)

The term "Service Switching Point" (SSP) denotes a signal point equipped with the ability to halt call process, formulate and send a SS7 query to a remote location and route the call based on information contained in the response.

Serving Wire Center

The term "Serving Wire Center" denotes the wire center from which the customer designated location would normally obtain dial tone from the Telephone Company. The "Serving Wire Center" is designated by the Telephone Company based upon the location being served.

Seven Digit Manual Test Line

The term "Seven Digit Manual Test Line" denotes a set of optional features for all Switched Access which allow the IC to select balance, milliwatt, and synchronous test lines of FGA and BSA-A, by manually dialing a seven digit number over the associated Switched Access.

Short Circuit Test Line

The term "Short Circuit Test Line" denotes the end office circuit which provides an ac short circuit termination of the trunk or line by means of a capacitor of at least 4 microfarads.

Signaling Point

The term "Signaling Point (SP)" denotes an SS7 network interface element capable of originating and/or terminating SS7 messages.

Signaling System 7 (SS7)

The term "Signaling System 7 (SS7)" denotes the layered protocol used for standardized common channel signaling in the United States.

© 2022 Frontier Communications Parent, Inc. All rights reserved..

2. GENERAL REGULATIONS (Cont'd)

2.6 Definitions (Cont'd)

Signal Transfer Point (STP)

The term "Signal Transfer Point (STP)" denotes a packet switch which provides access to the Telephone Company's SS7 network and performs SS7 message signal routing and screening. The technical interface specifications, transmission specifications, and diversity requirements for interconnecting to the Telephone Company's SS7 network at the STP are as described in Technical Reference GR-905-CORE, Issue 11.

Signal Transfer Point (STP) Port

The term "Signal Transfer Point (STP) Port" denotes the physical point of termination and interconnection to the STP.

Statistical Multiplexing

A multiplexing technique in which timeslots are dynamically allocated on the basis of need rather than being predetermined; the data is typically transmitted on a first served basis.

SONET

The term "SONET" (Synchronous Ethernet Private Line) denotes a family of fiber optic transmission bit rates starting at 51.84 Mpbs, designed to provide the flexibility needed to transport many digital signals with different capacities.

Synchronous Test Line

The term "Synchronous Test Line" denotes an arrangement of an end office which performs marginal operational tests of supervisory and ring tripping functions.

Synchronous Transfer Module (STM)

STM-1 is the international equivalent SONET's OC3 transmission rate.

Synchronous Transport Signal (STS1)

The term “Synchronous Transport Signal” (STS1) denotes a 51.84 Mbps signal that is the electrical equivalent of the OC1 or a DS3 with additional Mbps devoted to SONET overhead information. An STS1 can carry a DS3 or 28 DS1s when specifically formatted (mapped). These DS1s may be accessed off-ring using DS3 to DS1 Multiplexing as set forth in Section 20 or at an enhanced node via a DS3 Transmux port.

© 2022 Frontier Communications Parent, Inc. All rights reserved..

2. GENERAL REGULATIONS (Cont'd)

2.6 Definitions (Cont'd)

Telecommunications Relay Service(TRS) Carriers

The term "Telecommunications Relay Service (TRS) Carriers" denotes companies/associations which provide two-way communications between an individual with a hearing or speech impairment who uses a Text Telephone or other nonvoice terminal, and an individual who does not use such a device.

Telecommunications Relay Service (TRS) Equal Access Interconnection

The term "Telecommunications Relay Service (TRS) Equal Access Interconnection" denotes the arrangement by which TRS Carriers interconnect with the Telephone Company to provide originating equal access to their end users. TRS Interconnection is provided from a TRS Carrier over Switched Access Entrance Facilities and Direct Trunked Transport facilities directly to a Telephone Company Access Tandem. The Telephone Company does not provide end office local switching functions with this interconnection arrangement.

Telecommunications Service Priority (TSP) System

The term "Telecommunications Service Priority (TSP) System" or "TSP System" refers to the regulatory, administrative and operational system authorizing and providing for priority treatment (i.e., the provisioning and restoration) of NSEP Services.

Temporary Facilities

The term "Temporary Facilities" denotes facilities used to provide FIA to a customer for less than the minimum service period or less than one month, whichever is longer, or to provide FIA while permanent facilities are being constructed.

Terminating Direction

The term "Terminating Direction" denotes the use of Switched Access for the completion of calls from a CDL to an end user.

Termination Liability Period

The term “Termination Liability Period” denotes the length of time the customer is liable for a termination charge in the event the Individual Case Basis (ICB) arrangement is terminated.

© 2022 Frontier Communications Parent, Inc. All rights reserved..

2. GENERAL REGULATIONS (Cont'd)

2.6 Definitions (Cont'd)

Toll Free

"Toll Free" is considered to mean any access service which utilizes any of the following NPAs: 800, 888, 877, 866, 855, 844, 833,and 822 as they become available to the industry.

Transmuxing

The term “Transmuxing” denotes the function of a DSR DS3 Transmux port which performs a DS3 to DS1 conversion at a DSR node. The DS3 to DS1 conversions allows a single DSR DS3 Transmux port to be associated with up to twenty-eight (28) VT1.5 mapped DSR DS1 ports. Transmuxing within the DSR network retains DS1 visibility allowing for full, proactive maintenance capability of DS1 signals.

Trunk

The term "Trunk" denotes a communications path connecting two switching systems in a network, used in an end to end connection.

Trunk Group

The term "Trunk Group" denotes a grouping of trunks which are traffic engineered as a unit for the establishment of connections between switching systems in which all of the communications paths are interchangeable.

Trunk Side Connection

The term "Trunk Side Connection" denotes the connection of a transmission path to the trunk side of an end office switch.

U.S. Domestic Offshore Points

The term "U.S. Domestic Offshore Points" denotes any U.S. location that is not part of the conterminous United States.

V&H Coordinates Method

The term "V&H Coordinates Method" denotes a method of computing airline miles between two points by utilizing an established formula which is based on the Vertical (V) and Horizontal (H) coordinates of the two points.

© 2022 Frontier Communications Parent, Inc. All rights reserved..

2. GENERAL REGULATIONS (Cont'd)

2.6 Definitions (Cont'd)

Virtual EIS

The term "Virtual EIS" denotes an offering that enables customers to designate or specify equipment needed to terminate basic transmission facilities, including optical terminating equipment and multiplexers, to be located within or upon Telephone Company's wire center or access tandem buildings, and dedicated to such customers use.

Virtual Connection

The term "Virtual Connection" denotes a logical channel resulting from call establishment to a network address that exists until the call is terminated by either party.

WATS Serving Office

The term "WATS Serving Office" denotes a Telephone Company designated serving wire center where switching, screening and/or recording functions are performed in connection with a Special Access Line used with a Switching Interface as in 4.2.5(V) #.

Wire Center

The term "Wire Center" denotes a location in which one or more central office switches, and cross connection equipment used for the provision of Telephone Company telecommunications services, are located.

Wire Center Area

The term "Wire Center Area" denotes the geographic area served by a Wire Center through the use of central office switching equipment, cross connection equipment, and subscriber loops.

The use of the terms WATS or WATS type throughout this Guide is primarily for ordering purposes and is not intended to restrict the use of the customer services when ordering Special Access and Switched Access in combination.

© 2022 Frontier Communications Parent, Inc. All rights reserved..

2. GENERAL REGULATIONS (Cont'd)

2.7 FIA Services Provided By More Than One Telephone Company

2.7.1 General

When Special Transport service is provided by more than one telephone company, the telephone companies involved will mutually agree upon one of the billing methods based upon the type of access service and the interconnection arrangements between the telephone companies.

The telephone company will notify the customer which billing method will be used. The customer will place the ASR as in 3.3.

2.7.2 Reserved

2.7.3 Meet Point Billing

Meet Point Billing is required when an access service is provided by multiple Telephone Companies* for Special Access.

* Meet Point Billing option guidelines, as contained in the MECAB Guidelines, may also be applied to FIA services provided by one exchange carrier in two or more states within a single LATA.

© 2022 Frontier Communications Parent, Inc. All rights reserved..

2. GENERAL REGULATIONS (Cont'd)

2.7 FIA Services Provided By More Than One Telephone Company (Cont'd)

2.7.3 Meet Point Billing (Cont'd)

(A) Reserved

© 2022 Frontier Communications Parent, Inc. All rights reserved..

2. GENERAL REGULATIONS (Cont'd)

2.7 FIA Services Provided By More Than One Telephone Company (Cont'd)

2.7.3 Meet Point Billing (Cont'd)

(A) Reserved

© 2022 Frontier Communications Parent, Inc. All rights reserved..

2. GENERAL REGULATIONS (Cont'd)

2.7 FIA Services Provided By More Than One Telephone Company (Cont'd)

2.7.3 Meet Point Billing (Cont'd)

(A) Reserved

© 2022 Frontier Communications Parent, Inc. All rights reserved..

2. GENERAL REGULATIONS (Cont'd)

2.7 FIA Services Provided By More Than One Telephone Company (Cont'd)

2.7.3 Meet Point Billing (Cont'd)

(A) Reserved

© 2022 Frontier Communications Parent, Inc. All rights reserved..

2. GENERAL REGULATIONS (Cont'd)

2.7 FIA Services Provided By More Than One Telephone Company (Cont'd)

2.7.3 Meet Point Billing (Cont'd)

(B) Multiple Bill Option

The Multiple Bill option allows all Telephone Companies providing service to bill the customer for their portion of a jointly provided access service. Each Telephone Company will:

determine its portion of the Switched Transport and/or Special Transport as set forth in 2.7.3(C);
determine the applicable charges and bill in accordance with its tariff;
include all recurring and nonrecurring rates and charges of its tariff; and
forward the bill to the customer.

The customer will remit the payments directly to each Telephone Company.

(C) Meet Point Billing Mileage Calculation

Each Telephone Company's portion of the Special Transport mileage will be determined as follows:

(2) Determine the billing percentage (BP), as set forth in the NECA Tariff FCC No. 4. This represents the portion of the Service provided by each telephone company.

© 2022 Frontier Communications Parent, Inc. All rights reserved..

2. GENERAL REGULATIONS (Cont'd)

2.7 FIA Services Provided By More Than One Telephone Company (Cont'd)

2.7.3 Meet Point Billing (Cont'd)

(C) Meet Point Billing Mileage Calculation (Cont'd)

© 2022 Frontier Communications Parent, Inc. All rights reserved..

2. GENERAL REGULATIONS (Cont'd)

2.7 FIA Services Provided By More Than One Telephone Company (Cont'd)

2.7.3 Meet Point Billing (Cont'd)

(C) Meet Point Billing Mileage Calculation (Cont'd)

(3) (Cont'd)

(4) For Special Access and, multiply the number of airline miles as in (1), times the BP for each telephone company as in (2), times the Special Transport or Direct-Trunked Transport Facility rate elements. For DS1 and DS3 Special Transport and DS1 and DS3 Direct-Trunked Transport, multiply the Special Transport Termination or Direct-Trunked Transport Termination rate times the number of terminations provided by the Telephone Company.

© 2022 Frontier Communications Parent, Inc. All rights reserved..

2. GENERAL REGULATIONS (Cont'd)

2.7 FIA Services Provided By More Than One Telephone Company (Cont'd)

2.7.3 Meet Point Billing (Cont'd)

(D) All other appropriate recurring and nonrecurring charges in each telephone company's Access tariff are applicable.

(E)

(F)

(G)

(H) For tandem routed trunks, the dedicated trunk port shall be billed by the Telephone Company owning the tandem. For end office direct routed trunks, the dedicated trunk port shall be billed by the Telephone Company owning the end office on a multiple tariff meet point billing arrangement.

(I) The shared multiplexing charge will be assessed to the interexchange carrier by the Telephone Company owning the access tandem under the multiple bill, multiple tariff meet point billing option.

© 2022 Frontier Communications Parent, Inc. All rights reserved..

2. GENERAL REGULATIONS (Cont'd)

2.7 FIA Services Provided By More Than One Telephone Company (Cont'd)

2.7.4 Zone Density Meet Point Billing

When the Switched Transport facility (Direct-Trunked or Tandem-Switched Transport) and/or Special Transport is provided by more than one telephone company the following regulations apply:

(A) Switched Access

(1) End Office or Access Tandem is in the Telephone Company's Territory:

(a) Distance sensitive transport provided by the Telephone Company will be rated according to the zone of the Telephone Company's end office or Telephone Company's access tandem.

(b) The transport termination provided by the Telephone Company will be rated according to the zone assigned to the Telephone Company's end office or Telephone Company's access tandem.

(c) Tandem Switching will be rated according to the zone of the Telephone Company's access tandem.

(2) The Telephone Company is intermediate provider of the transport:

(a) Distance sensitive transport will be rated at Zone 1/Band A rates.

(b) The transport termination rate does not apply if the Telephone Company is the intermediate provider of the transport facility.

© 2022 Frontier Communications Parent, Inc. All rights reserved..

2. GENERAL REGULATIONS (Cont'd)

2.7 FIA Services Provided By More Than One Telephone Company (Cont'd)

2.7.4 Zone Density Meet Point Billing (Cont'd)

(B) Special Access

(1) End Office or Access Tandem is in the Telephone Company’s Territory

(a) Special transport provided by the Telephone Company will be rated according to the zone of the Telephone Company's end office or Telephone Company's access tandem.

(b) The transport termination provided by the Telephone Company will be rated according to the zone assigned to the Telephone Company's end office or Telephone Company's access tandem.

(2) The Telephone Company is intermediate provider of the transport.

(a) Distance Sensitive Transport will be rated at Zone 1/Band A rates.

(b) The transport termination rate does not apply if the Telephone Company is the intermediate provider of the transport facility.

© 2022 Frontier Communications Parent, Inc. All rights reserved..

2. GENERAL REGULATIONS (Cont'd)

2.8 Service Level Agreements

2.8.1 Basic Service Level Agreements (Basic SLAs)

Regulations pertaining to Basic SLAs are contained in this Guide as specified following:

Credit Allowance for FIA Interruptions 2.8.1.1

(D)

© 2023 Frontier Communications Parent, Inc. All rights reserved..

2. GENERAL REGULATIONS (Cont'd)

2.8 Service Level Agreements (Cont'd)

2.8.1 Basic Service Level Agreements (Basic SLAs) (Cont'd)

2.8.1.1 Credit Allowance for FIA Interruptions

(A) General

A FIA is interrupted when it becomes unusable to the customer because of a failure of a component used to furnish FIA under this Guide, or when the service is preempted as a result of invoking NSEP Treatment or when the application of protective controls interrupt all transmission paths as set forth in 4.2.9 following. An interruption period starts when the Telephone Company personnel are notified by the customer that the FIA is inoperative.

The credit allowance(s) for an interruption or for a series of interruptions will be computed based upon the billing method which applies to the service being credited. In no case will the credit allowance for service interruptions exceed the applicable charges for the billing period during which the interruption occurred.

Subject to Section 2.8.4(B) following, in case of an interruption to any service, credit allowance for the period of interruption shall be as follows:

(1) For Special Access services other than Program Audio, Videoband and Expanded Interconnection, and for Switched Access Entrance Facilities, Direct-Trunked Transport and Multiplexing services a credit allowance will be made for an interruption period of 30 minutes or more. The allowance will be calculated at the rate of 1/1440 of the monthly charge for the portion of the FIA affected, for each 30 minutes or major fraction thereof that the interruption continues. A major fraction is considered to be sixteen minutes or more beyond the 30 minute period.

© 2022 Frontier Communications Parent, Inc. All rights reserved..

2. GENERAL REGULATIONS (Cont'd)

2.8 Service Level Agreements (Cont'd)

2.8.1 Basic Service Level Agreements (Basic SLAs) (Cont'd)

2.8.1.1 Credit Allowance for FIA Interruptions (Cont'd)

(A) General (Cont'd)

(2) For Program Audio and Videoband Special Access services, a credit allowance will be made for an interruption of 30 seconds or more. Two or more such interruptions occurring during a period of 5 consecutive minutes shall be considered as one interruption. The allowance will be calculated as follows:

(a) For Program Audio Service provided at monthly rates, the credit will be at the rate of 1/8640 of the monthly service rate.
(b) For Program Audio Service provided at daily rates, the credit will be at the rate of 1/288 of the daily rate.
(c) For Temporary Videoband Service provided at hourly rates, the credit will be at 1/12 of the hourly rate.

(3) Except as noted, all Special Access Services will be eligible for a credit allowance for each occurrence of a service interruption period greater than 30 minutes. The maximum credit allowance will be $200.00 for each out of service condition within the Telephone Company's facilities and will not exceed the monthly charge for the interrupted service. The credit allowance will not be applied more than once per calendar month. This credit allowance is applicable in all jurisdictions. The credit allowance is in addition to the credit allowance in 2.8.1.1(A)(1) and 2.8.1.1(A)(2). A credit allowance will not be extended in accordance with conditions in 2.1.3(G) and 2.8.1.1(B) for repair of Telephone Company owned facilities.

© 2022 Frontier Communications Parent, Inc. All rights reserved..

2. GENERAL REGULATIONS (Cont'd)

2.8 Service Level Agreements (Cont'd)

2.8.1 Basic Service Level Agreements (Basic SLAs) (Cont'd)

2.8.1.1 Credit Allowance for FIA Interruptions (Cont'd)

(A) General (Cont'd)

(3) (Cont'd)

The exceptions to this credit allowance are, Part-time Program Audio Service in 5.2.3, Videoband I and II Services in 5.2.4, Miscellaneous Special Access Services in 5.8 and Individual Case Basis Services in 5.9.

* Section 2.8.1.1(A)(3) is not available for Special Access Services installed after June 1, 2006. The preceding sentence applies to both Special Access Services that are provided on a month-to-month basis and Special Access Services that are provided under a Discount Plan (as defined below).

For Special Access Services installed on or before June 1, 2006, Section 2.8.1.1(A)(3) will not be available as follows:
(a) For Special Access Services provided on a month-to-month basis, after June 1, 2006.
(b) For Special Access Services provided under a Discount Plan (as defined below), after the date of expiration, termination, or cancellation of the Discount Plan commitment period that is in effect on June 1, 2006.
(c) For Special Access Services provided under a Discount Plan (as defined below) that are covered by a National Service Level Agreement Plan, during the period that a customer participates in such National Service Level Agreement Plan. The customer has the option to subscribe to National Service Level Agreement Plans as set forth in Section 2.8.3 and/or Section 5.6.20 following. Nothing in this paragraph (c) shall in any way limit the effect of paragraph (b) preceding.

As used in this note, “Discount Plan” means any tariff arrangement for the provision of Special Access Services other than on a month-to-month basis.

For any month for which a Special Access Service receives a credit allowance under Section 2.8.1.1(A)(3), that Special Access Service shall not receive a credit allowance under Section 2.8.1.1 (A)(4).

© 2022 Frontier Communications Parent, Inc. All rights reserved..

2. GENERAL REGULATIONS (Cont'd)

2.8 Service Level Agreements (Cont'd)

2.8.1 Basic Service Level Agreements (Basic SLAs) (Cont'd)

2.8.1.1 Credit Allowance for FIA Interruptions (Cont'd)

(A) General (Cont'd)

(4) For certain Special Access services, a Special Access Service Guarantee (SASG) credit allowance will apply in the event that such services experience a service interruption of four or more consecutive hours except as specified in 2.8.4(B) following. The SASG credit allowance will apply to Voiceband, monthly Program Audio, Video Digital Transport Service-Type II, Digital Data Service (DDS), and High Capacity DS1 & DS3 Special Access services (collectively, Special Access Services).

The customer has the option to subscribe to National SLA Plans as set forth in Section 2.8.3 and/or Section 5.6.20 following. When a customer subscribes to a National SLA Plan, SASG credit allowances under this Section 2.8.1.1(A)(4) do not apply to services covered by the National SLA Plan.

If a Special Access Service is eligible for an SASG credit allowance, the Telephone Company shall provide the applicable credit amount as set forth in the table following. The Telephone Company shall bill customer the applicable monthly rate for the Special Access Service, and if customer is eligible to receive the SASG credit allowance, the customer shall receive the SASG credit in a later invoice. Except as stated in this Guide, the SASG credit allowance is in addition to any other credit allowances available under this Section 2.8.1.1. The maximum amount of all credit allowances available under this Section 2.8.1.1 for a Special Access Service for a given billing period shall not exceed the total applicable monthly charge paid by the customer for such Special Access Service. The monthly charge will consist of all applicable rate elements charged to the circuit experiencing the service interruption. The SASG credit allowance can only be applied once per month on a per circuit basis. For multi-point circuits, the SASG credit allowance will apply to each leg of the circuit that experiences a service interruption.

© 2022 Frontier Communications Parent, Inc. All rights reserved..

2. GENERAL REGULATIONS (Cont'd)

2.8 Service Level Agreements (Cont'd)

2.8.1 Basic Service Level Agreements (Basic SLAs) (Cont'd)

2.8.1.1 Credit Allowance for FIA Interruptions (Cont'd)

(A) General (Cont'd)

(4) (Cont'd)

The Special Access Service Guarantee (SASG) credit allowance, for each applicable service is listed below and applies to all states:

Service	SASG (per circuit)
Voiceband	$20.00
Full-time Program Audio (provided at monthly rates)	
200 – 3500 Hz	10.00
100 – 5000 Hz	15.00
50 – 8000 Hz	20.00
50 – 15000 Hz	25.00
Video Digital Transport Service – Type II (monthly, 1-year, 2-year, 3-year & 5-year plans)	100.00
Digital Data Service (DDS)	
2.4 kbps	40.00
4.8 kbps	45.00
9.6 kbps	50.00
19.2 kbps	55.00
56.0 kbps	60.00
64.0 kbps	65.00
High Capacity	
DS1	160.00
DS3	400.00

© 2022 Frontier Communications Parent, Inc. All rights reserved..

2. GENERAL REGULATIONS (Cont'd)

2.8 Service Level Agreements (Cont'd)

2.8.1 Basic Service Level Agreements (Basic SLAs) (Cont'd)

2.8.1.1 Credit Allowance for FIA Interruptions (Cont'd)

(A) General (Cont'd)

(5) For Switched Access service, billed using assumed minutes of use, a credit allowance will be made for an interruption of 24 hours or more. The credit allowance will be calculated at 1/30 of the assumed minutes of use charge for each 24 hours or major fraction thereof that the interruption continues. A major fraction is considered to be 13 hours. No credit will be given where Switched Access billing is based on actual usage.

(6) For Switched Access service interrupted by an NXX isolation a credit will be given the billed customer of record utilizing the following formula:

300 Minutes of Use X the appropriate switched access rate X the number of trunks out of service = the credit allowance

NXX isolation is defined as a situation whereby a customer in an NPA-NXX is unable to originate a call to the carrier network and/ or receive a call from the carrier network.

The credit will apply when an out of service condition of 30 minutes or more occurs within the Telephone Company's switched facilities. The credit allowance will not be applied more than once per calendar month. A credit allowance will not be extended in accordance with conditions in 2.1.3(G) and 2.8.4(B) for repair of Telephone Company owned facilities.

(7) Switched Access Service Entrance Facilities, Direct-Trunked Transport and Multiplexing will be eligible for a credit allowance for each occurrence of a service interruption period greater than 30 minutes. The maximum credit allowance will be $200.00 for each out of service condition within the Telephone Company's facilities. The credit allowance will not exceed the monthly charge for the interrupted service and will not be applied more than once per calendar month. This credit allowance is applicable in all jurisdictions. A credit allowance will not be extended in accordance with conditions in 2.1.3(G) and 2.8.4(B) for repair of Telephone Company owned facilities.

© 2022 Frontier Communications Parent, Inc. All rights reserved..

2. GENERAL REGULATIONS (Cont'd)

2.8 Service Level Agreements (Cont'd)

2.8.1 Basic Service Level Agreements (Basic SLAs) (Cont'd)

2.8.1.1 Credit Allowance for FIA Interruptions (Cont'd)

(A) General (Cont'd)

(8) For Common Channel Signaling System 7 (CCS7) Access Service, described in 4.2.10, a credit allowance will be made for an interruption period of 30 minutes or more. The allowance will be calculated at the rate of 1/1440 of the monthly charge for the portion of the service affected, for each 30 minutes or major fraction thereof that the interruption continues. A major fraction is considered to be 16 minutes or more beyond the 30-minute period.

(9) An out of service credit will apply for the following Optical Networking rate elements, where applicable, should the service be interrupted due to the Telephone Company's system's failure to switch to protected electronics and/or facilities within one (1) second in those locations connected to the Telephone Company surveillance system unless such interruptions are a result of conditions outside the Telephone Company's control:

- ON-net Banded Optical Transport provisioned via ring topology

Credit will be predicated on information provided by the Telephone Company's and the customer's network surveillance systems associated with this service arrangement. The Telephone Company and the customer shall each have the opportunity to perform an annual inspection of the other party's network surveillance system to confirm its accuracy. The out-of-service credit will be calculated based on the monthly rate element charges of that portion of the inter-office network rendered inoperative. A maximum limit of one month's recurring charge per rate element will be allotted for an interruption or series of interruptions within any one billing period.

The credit allowance for all other Optical Networking access services will be as shown in 2.8.1.1(A)(1) and (3).

(10) For Dedicated SONET Entrance Facilities, any single service outage of one (1) hour or more and due solely to a Telephone Company facility failure will result in a credit of one hundred percent (100%) of the monthly rate for the applicable DSEF rate elements affected. Only one such credit is allowed in a single month’s billing period.

© 2022 Frontier Communications Parent, Inc. All rights reserved..

2. GENERAL REGULATIONS (Cont'd)

2.8 Service Level Agreements (Cont'd)

2.8.1 Basic Service Level Agreements (Basic SLAs) (Cont'd)

2.8.1.1 Credit Allowance for FIA Interruptions (Cont'd)

(B) When a Credit Allowance Does Not Apply

Services will not be eligible for credits when any of the conditions set forth in Section 2.8.4(B) following exist.

(C) Use of an Alternative Service Provided by the Telephone Company

Should the customer elect to use an alternative service provided by the Telephone Company during the period that a FIA is interrupted, the customer must pay the tariffed rates and charges for the alternative service used.

(D) Temporary Surrender of a FIA

In certain instances, the customer may be requested to surrender a FIA for purposes other than maintenance, testing or activity relating to an ASR. If the customer consents, or in the instance of preemption under NSEP Treatment as set forth in Section 2.1.9 preceding, a credit allowance will be granted. The credit allowance will be determined in accordance with 2.8.1.1(A) and (B) preceding.

© 2022 Frontier Communications Parent, Inc. All rights reserved..

2. GENERAL REGULATIONS (Cont'd)

2.8 Service Level Agreements (Cont'd)

2.8.1 Basic Service Level Agreements (Basic SLAs) (Cont'd)

2.8.1.2 Reserved For Future Use (C)

© 2023 Frontier Communications Parent, Inc. All rights reserved..

2. GENERAL REGULATIONS (Cont'd)

2.8 Service Level Agreements (Cont'd)

2.8.2 Enhanced Service Level Agreements (Enhanced SLAs)

Regulations pertaining to Enhanced SLAs are contained in this Guide as specified following:

Integrated Optical Service Rider SLAs 2.8.2.1

© 2022 Frontier Communications Parent, Inc. All rights reserved..

2. GENERAL REGULATIONS (Cont'd)

2.8 Service Level Agreements (Cont'd)

2.8.2 Enhanced Service Level Agreements (Enhanced SLAs)

2.8.2.1 Integrated Optical Service Rider SLAs

(A) General

(1) With the exception of those Integrated Optical Service Riders provided subject to Section 24.1.3 following, the SLAs set forth in this Section 2.8.2.1 apply to all other Integrated Optical Service Riders set forth in Section 24.1 following ("Qualifying Services").

(2) The monthly recurring rate(s) for the Qualifying Service are the Integrated Optical Service Rider Appearances.

(3) To receive credit, the Telephone Company must receive from the customer a written request for credit within sixty (60) calendar days of the end of the calendar month in which the SLA threshold was missed. The customer's request for credit must be submitted to the appropriate Telephone Company in a manner mutually agreed upon by the Telephone Company and the customer. The request must include a list of the identification numbers of all impacted circuits.

(B) Availability

(1) Availability refers to the percentage of time over a calendar month that a Qualifying Service is able to transmit data over the Telephone Company's integrated optical service. A Qualifying Service is unavailable if data cannot be transmitted because of a failure of a facility component within the Telephone Company's integrated optical service that is used to furnish the Qualifying Service provided under this Guide.

(2) Availability is calculated as follows: Availability = (1440 X Number of Days in Month) – (Number of Minutes the Service is unavailable during Month)/(1440 X Number of Days in Month). The number of minutes the Service is unavailable is as determined by the Telephone Company.

(3) The Telephone Company threshold for Availability under this Section in a calendar month is 99.999%.

© 2022 Frontier Communications Parent, Inc. All rights reserved..

2. GENERAL REGULATIONS (Cont'd)

2.8 Service Level Agreements (Cont'd)

2.8.2 Enhanced Service Level Agreements (Enhanced SLAs) (Cont'd)

2.8.2.1 Integrated Optical Service Rider SLAs (Cont'd)

(B) Availability (Cont'd)

(4) If Availability under this Section is less than the threshold, then a credit equal to twenty-five percent (25%) of the monthly recurring rate(s) for the affected Qualifying Service applies. Only one (1) such credit is allowed in a single month's billing period.

(C) Mean Time to Restore (MTTR)

(1) MTTR applies to an interruption of service that is within the Telephone Company's integrated optical service.

(2) Interruption of service is defined as a condition which renders a Qualifying Service unusable to the customer (i.e., data cannot be transmitted) because of a failure of a facility within the Telephone Company's integrated optical service that is used to furnish the Qualifying Service under this Guide. The Telephone Company will initiate a trouble ticket on all DS1 Qualifying Service interruptions reported by the customer. The Telephone Company will initiate a trouble ticket on all DS3 Qualifying Service interruptions reported by the customer and/or detected by the Telephone Company's network.

© 2022 Frontier Communications Parent, Inc. All rights reserved..

2. GENERAL REGULATIONS (Cont'd)

2.8 Service Level Agreements (Cont'd)

2.8.2 Enhanced Service Level Agreements (Enhanced SLAs) (Cont'd)

2.8.2.1 Integrated Optical Service Rider SLAs (Cont'd)

(C) Mean Time to Restore (MTTR) (Cont'd)

(3) MTTR for a calendar month shall be the average of all Time to Restore (TTR), as calculated by the Telephone Company. The TTR is the period of time the Qualifying Service is unavailable between the opening and closing of the trouble ticket, minus any stop clock time that was logged against the trouble ticket. Stop clock time includes, by way of example, the following times:

- Periods when customer testing is occurring.
- Periods when the customer is working on its own Customer Premises Equipment (CPE) and has not yet released the Qualifying Service to the Telephone Company for maintenance, testing or repair.
- Periods when the Telephone Company is awaiting customer authorization to commence work on the Qualifying Service.
- Periods when the Telephone Company is denied access to premises or facilities necessary to diagnose, repair, or test a Qualifying Service.
- Periods following repair of the Qualifying Service when the ticket is held open by the customer to ensure the trouble is resolved.

(4) MTTR is calculated by summing TTR for all measured tickets for the customer for the calendar month and dividing by the total number of tickets for that customer during that month.

(5) MTTR excludes any subsequent reports (i.e., additional customer inquiries while the trouble is pending), CPE troubles, trouble found on the customer's side of the point of demarcation, no trouble found, troubles closed due to customer action, force majeure events, and troubles repaired by the Telephone Company prior to receipt of a trouble report on that Qualifying Service.

© 2022 Frontier Communications Parent, Inc. All rights reserved..

2. GENERAL REGULATIONS (Cont'd)

2.8 Service Level Agreements (Cont'd)

2.8.2 Enhanced Service Level Agreements (Enhanced SLAs) (Cont'd)

2.8.2.1 Integrated Optical Service Rider SLAs (Cont'd)

(C) Mean Time to Restore (MTTR) (Cont'd)

(6) The threshold for MTTR in a calendar month is 2.5 hours for Qualifying Services.

(7) If the MTTR is greater than 2.5 hours over the calendar month for all of customer's Qualifying Services, then a credit equal to twenty-five percent (25%) of the monthly recurring rate(s) for the affected Qualifying Service applies for those Qualifying Services that were the subject of a trouble ticket during the measured calendar month whose TTR exceeded 2.5 hours. Only one (1) such credit is allowed in a single month's billing period. If the MTTR is 2.5 hours or less on all of customer's Qualifying Services, then no credit applies to any Qualifying Service, even if the TTR on a particular Qualifying Service exceeded such threshold.

(D) Qualifying Services will not be included in threshold measurements under this Section 2.8.2.1 and will not be eligible for credits under this Section 2.8.2.1, when any of the conditions set forth in Section 2.8.4(B) following exist.

© 2022 Frontier Communications Parent, Inc. All rights reserved..

2. GENERAL REGULATIONS (Cont'd)

2.8 Service Level Agreements (Cont'd)

2.8.3 Reserved for Future Use

© 2022 Frontier Communications Parent, Inc. All rights reserved..

2. GENERAL REGULATIONS (Cont'd)

2.8 Service Level Agreements (Cont'd)

2.8.4 When a Credit Allowance Does Not Apply

(A) Reserved For Future Use (C)

© 2023 Frontier Communications Parent, Inc. All rights reserved..

2. GENERAL REGULATIONS (Cont'd)

2.8 Service Level Agreements (Cont'd)

2.8.4 When a Credit Allowance Does Not Apply (Cont'd)

(A) Reserved For Future Use (C)

© 2023 Frontier Communications Parent, Inc. All rights reserved..

2. GENERAL REGULATIONS (Cont'd)

2.8 Service Level Agreements (Cont'd)

2.8.4 When a Credit Allowance Does Not Apply (Cont'd)

(B) FIA Interruptions/Mean Time to Restore/Availability

This Section 2.8.4(B) applies to and supplements Section 2.8.1.1 preceding, Credit Allowance for FIA Interruptions; Section 2.8.2 preceding, Enhanced Service Level Agreements; and Section 2.8.3 preceding, National Service Level Agreements. Services will not be included in performance measurements and credits will not apply:

(1) When the customer fails to report the interruption to the Telephone Company (excluding DS3 Integrated Optical Service Riders); or

(2) When the interruption was caused by the act or omission of the customer or a party authorized by the customer to use the service; or

(3) When the interruption was due to the failure of power, equipment, service, or systems provided by the customer or persons other than the Telephone Company; or

(4) For any period in which the Telephone Company is not afforded access to the premises where the service is terminated; or

(5) When the customer has released the service to the Telephone Company for maintenance purposes, to make rearrangements, or for the implementation of an order for a change in the service, during the time that was negotiated with the customer prior to the release of that service (thereafter, a credit allowance as set forth in this Section 2.8 applies); or

(6) For any period of scheduled maintenance or scheduled downtime where the customer has received prior notification from the Telephone Company; or

(7) When interruptions occur or continue because of the failure of the customer to authorize the replacement of any element of special construction; or

© 2022 Frontier Communications Parent, Inc. All rights reserved..

2. GENERAL REGULATIONS (Cont'd)

2.8 Service Level Agreements (Cont'd)

2.8.4 When a Credit Allowance Does Not Apply (Cont'd)

(B) FIA Interruptions/Mean Time to Restore/Availability (Cont'd)

(8) For periods when the customer elects not to release the service for testing and/or repair; or

(9) For periods of temporary discontinuance as set forth in Section 2.2.1 preceding; or

(10) During periods of interruption as set forth in Section 6.3 following; or

(11) When an interruption is required, permitted or excused by this Guide; or

(12) For interruptions, failures or delays due to acts of God or the public enemy, compliance with any law or any regulation or order of any governmental authority, acts of terrorism, war, rebellion, insurrection or sabotage or damage resulting therefrom, fires, floods, earthquakes, volcanic action, unusually severe weather, explosions, washouts, rules and regulations with regard to common carriers, accidents, epidemics, riots, strikes or other concerted acts of employees, whether direct or indirect, lockouts or other industrial disturbances, whether direct or indirect, worms, viruses or other contaminants that may cause damage to or disable software, computer or electronic systems, or any similar cause, or other causes beyond the Telephone Company's reasonable control (except that, this Section 2.8.4(B)(12) does not apply to Section 2.8.1.1, excluding the SASG as set forth in Section 2.8.1.1(A)(4), to which this Section 2.8.4(B)(12) shall apply); or

(13) For an interruption, or a group of interruptions resulting from a common cause, for amounts less than one dollar; or

(14) For any interruption of an EIS or EIS elements as described in Section 17 following.

© 2022 Frontier Communications Parent, Inc. All rights reserved..

2. GENERAL REGULATIONS (Cont'd)

2.9 Sale or Transfer of an Operating Telephone Company's Assets and/or Stock to an Unaffiliated Third Party

This Section 2.9 shall apply: (i) if the Telephone Company sells or transfers all or a portion of the assets or stock of an Operating Telephone Company (e.g., Frontier North, Inc.) to an unaffiliated third party ("Transfer"); and (ii) a service offering or Service Level Agreement (SLA) of this Guide as referenced in this Section 2.9 does not include terms and conditions relating to a Transfer.

2.9.1 General

The terms and conditions set forth in Section 2.9.2 following shall apply:

(A) when a customer subscribes to a service offering under this Guide that aggregates the customer's purchases from the Telephone Company to measure compliance with such service offering or the customer participates in a SLA that aggregates the customer's measured transactions, and:

(B) the service offering or SLA does not include terms and conditions pertaining to a Transfer; and

(C) as a result of the Transfer, one or more of the following conditions occur solely as a result of the Telephone Company no longer providing the same quantity of services:

(1) the customer no longer satisfies the minimum requirements of the service offering or SLA;

(2) the customer is subject to a related penalty, termination liability or cancellation;

(3) the customer is subject to a change in the tier of a volume table or a rate table; and

(4) the customer is subject to a change in the rate level of the service offering.

© 2022 Frontier Communications Parent, Inc. All rights reserved..

2. GENERAL REGULATIONS (Cont'd)

2.9 Sale or Transfer of an Operating Telephone Company's Assets and/or Stock to an Unaffiliated Third Party (Cont'd)

2.9.2 Undertaking of the Telephone Company Following a Transfer

When the conditions set forth in 2.9.1 preceding exist, the Telephone Company will utilize the following terms and conditions, as applicable.

(A) If the service offering includes specific minimum ordering requirements for participation, or requires that the customer achieve a minimum number of services, minimum number of rate elements, and/or minimum revenue within a specific geographic area in order to continue its subscription to the service offering or participation in a pricing plan for such service offering (each, a Minimum Requirement), the Telephone Company will apply the terms and conditions of this Section 2.9.2(A). The following service offerings have Minimum Requirements that are subject to this Section 2.9.2(A).

- Call Management Signaling Service as set forth in Section 6.19(D) following
- Directory Assistance Service/Preferred Directory Assistance Service as set forth in Section 8.1.1 following
- Banded Optical Transport as set forth in Sections 11.8.1(F) and 20(D)(2)(f) following
- TCP/IP Data Aggregation Service as set forth in Section 16.5 following

In the event of a Transfer, the following applies.

(1) The Telephone Company will, consistent with the service offering, determine if the customer satisfies the Minimum Requirement for the service offering with the reduced quantity of services the Telephone Company provides to the customer following the Transfer; and

© 2022 Frontier Communications Parent, Inc. All rights reserved..

2. GENERAL REGULATIONS (Cont'd)

2.9 Sale or Transfer of an Operating Telephone Company's Assets and/or Stock to an Unaffiliated Third Party (Cont'd)

2.9.2 Undertaking of the Telephone Company Following a Transfer (Cont'd)

(A) (Cont'd)

(2) if the customer does not satisfy the Minimum Requirement following the Transfer, determine if the customer would have satisfied the Minimum Requirement had the Transfer not occurred. If the customer would have satisfied the Minimum Requirement had the Transfer not occurred, then no further action shall be taken and the customer will be considered to have satisfied the Minimum Requirement. If the customer would not have satisfied the Minimum Requirement had the Transfer not occurred, then the terms and conditions for such result shall apply under the applicable service offering, except that the calculation of any penalty associated with not satisfying the Minimum Requirement shall be reduced pro-rata to reflect the Transfer. Upon renewal of the customer's commitment period for such service offering or subsequent subscription to such service offering, as applicable, the terms and conditions set forth in the applicable section(s) of this Guide shall apply, including satisfying the Minimum Requirement for such service offering using only the quantity of services the customer purchases from the Telephone Company at the time of renewal or subsequent subscription.

© 2022 Frontier Communications Parent, Inc. All rights reserved..

2. GENERAL REGULATIONS (Cont'd)

2.9 Sale or Transfer of an Operating Telephone Company's Assets and/or Stock to an Unaffiliated Third Party (Cont'd)

2.9.2 Undertaking of the Telephone Company Following a Transfer (Cont'd)

(A) (Cont'd)

(2) (Cont'd)

For example, assume Frontier Florida LLC transfers a portion of its assets to an unaffiliated third party. Further assume that a customer subscribes to Call Management Signaling Service under Section 6.19(D) following which has a minimum monthly billing of one million (1,000,000) call signals per month. Also assume that following the Transfer, the volume of call signals recorded for the customer at the next scheduled review is nine hundred fifty thousand (950,000), and that an estimated one hundred thousand (100,000) call signals were associated with the services transferred to the unaffiliated third party. In this case, the Telephone Company would determine if the customer would have satisfied the minimum number of call signals had the Transfer not occurred by adding (i) the estimated number of call signals associated with the services transferred to the unaffiliated third party and; (ii) the recorded number of call signals for the period of review [950,000 + 100,000 = 1,050,000 call signals]. Based on this calculation, the customer would have satisfied the Minimum Requirement and will not incur any shortfall charges. However, if the result of such calculation was that the customer still did not satisfy the Minimum Requirement for the service, then the terms and conditions for such result shall apply under Section 6.19(D) following, except that the calculation of shortfall charges shall be reduced pro-rata to reflect the Transfer.

© 2022 Frontier Communications Parent, Inc. All rights reserved..

2. GENERAL REGULATIONS (Cont'd)

2.9 Sale or Transfer of an Operating Telephone Company's Assets and/or Stock to an Unaffiliated Third Party (Cont'd)

2.9.2 Undertaking of the Telephone Company Following a Transfer (Cont'd)

(B) If the service offering requires that the customer commit a minimum number of the services or rate elements that the customer purchases from the Telephone Company and maintain such minimum during the term of the service offering (a Commitment Level), and the service offering does not apply rates or credits based on a volume based tier structure, the Telephone Company will apply this Section 2.9.2(B). The following service offering has a Commitment Level that is subject to this Section 2.9.2(B).

- Four-wire Voiceband and Digital Data Service Rate Stability Plan as set forth in Section 5.6.13 following

In the event of a Transfer, the following applies.

(1) The Telephone Company will recalculate the Commitment Level for the duration of the current term to reflect the removal of the services the Telephone Company no longer provides to the customer solely as a result of the Transfer; and

(2) use the reduced Commitment Level in all subsequent reviews/true-ups that measure the customer's compliance with established requirements for the service offering for the balance of the current term unless otherwise revised by: (i) the customer in accordance with the terms and conditions of the service offering; or (ii) the terms and conditions of such service offering. Upon renewal of the customer's term for such service offering, the terms and conditions set forth in the applicable section(s) of this Guide shall apply, including establishment of a new Commitment Level using only the quantity of services the customer purchases from the Telephone Company at the time of renewal.

(3) If, after reducing the Commitment Level under (2) preceding, the customer is below the minimum combined national commitment level of five hundred (500) Four-wire Voiceband and DDS SALs as required under Section 5.6.13(B) following, the Telephone Company will determine if the customer would have satisfied such minimum requirement had the Transfer not occurred and apply the same actions applied under (A)(2) preceding.

© 2022 Frontier Communications Parent, Inc. All rights reserved..

2. GENERAL REGULATIONS (Cont'd)

2.9 Sale or Transfer of an Operating Telephone Company's Assets and/or Stock to an Unaffiliated Third Party (Cont'd)

2.9.2 Undertaking of the Telephone Company Following a Transfer (Cont'd)

(B) (Cont'd)

For example, assume Frontier California Inc. transfers a portion of its assets to an unaffiliated third party. Further assume that a customer with a Four-wire Voiceband and Digital Data Service Rate Stability Plan and a Commitment Level of seven hundred fifty (750) DDS SALs is short of its Commitment Level at the next scheduled annual review by one hundred twenty-five (125) DDS SALs (i.e., the customer has six hundred twenty-five (625) DDS SALs in-service at the next annual review). Also assume that one hundred (100) DDS SALs were transferred to an unaffiliated third party as a result of the Transfer. In this case, the Telephone Company will reduce the customer's Commitment Level to six hundred fifty (650) DDS SALs (750 DDS SALs – 100 DDS SALs = 650 DDS SALs) to reflect the transfer. Since the customer's reduced Commitment Level is 650 DDS SALs , the customer is still twenty-five (25) DDS SALs short of the reduced Commitment Level (650 DDS SALs – 625 DDS SALs = 25 DDS SALs short). After applying a minus two percent (2%) shortage allowance per the terms and conditions for this rate stability plan, the customer is still short of its Commitment Level and subject to penalty on the resulting shortage.

© 2022 Frontier Communications Parent, Inc. All rights reserved..

2. GENERAL REGULATIONS (Cont'd)

2.9 Sale or Transfer of an Operating Telephone Company's Assets and/or Stock to an Unaffiliated Third Party (Cont'd)

2.9.2 Undertaking of the Telephone Company Following a Transfer (Cont'd)

(C) If the service offering applies rates or credits based on a volume-based tier structure, the Telephone Company will apply this Section 2.9.2(C). The following service offerings have a volume-based tier structure that is subject to this Section 2.9.2(C).

- DS1 Term Volume Plans (i.e., one, two, three and five year DS1 TVP and eight and ten year DS1 TVP (DS1 ETTVP)) as set forth in Section 5.6.14 following

- DS3 Term Volume Plans as set forth in Section 5.6.19 following

In the event of a Transfer, the following applies.

(1) The Telephone Company will calculate an adjustment to be used in each scheduled review/true-up following the Transfer for the balance of the customer's current term (Transfer Adjustment). The Transfer Adjustment (which will be calculated using the actual number of units transferred to the unaffiliated third party) offsets the reduced volume achieved by the customer solely as a result of the Transfer (Transfer Adjustment Units) by summing: (i) the actual volume units achieved by the customer during the applicable review/true-up period (Actual Units); and (ii) the Transfer Adjustment Units. The resulting volume of units (Adjusted Units) shall be used in all applicable review/true-up calculations for the balance of the customer's current term. Upon completion of the current term, the terms and conditions set forth in the applicable section(s) of this Guide shall apply using only the quantity of services the customer purchases from the Telephone Company with no further Transfer Adjustments being applied; and

(2) if, after applying the Transfer Adjustment, the customer still fails to maintain the same volume tier, the terms and conditions applicable to such result apply in accordance with the service offering, except that the calculation of any penalty associated with attaining a lesser volume tier shall be reduced pro-rata to reflect the Transfer.

© 2022 Frontier Communications Parent, Inc. All rights reserved..

2. GENERAL REGULATIONS (Cont'd)

2.9 Sale or Transfer of an Operating Telephone Company's Assets and/or Stock to an Unaffiliated Third Party (Cont'd)

2.9.2 Undertaking of the Telephone Company Following a Transfer (Cont'd)

(C) (Cont'd)

For example, assume Frontier Florida LLC transfers a portion of its assets to an unaffiliated third party. Further assume a customer under a DS1 TVP with a committed quantity of 1,500 DS1 SALs (threshold level of 1001 – 3000 DS1 SALs) is five hundred seventy-five (575) DS1 SALs short of its committed quantity at the next annual review following a Transfer. Further assume that five-hundred (500) DS1 SALs were transferred to an unaffiliated third party in the Transfer and that the in-service quantity of DS1 SALs as measured at the next annual review is nine hundred twenty-five (925). In this case, the Telephone Company will apply a Transfer Adjustment which adds the 500 DS1 SALs lost in the Transfer (the Transfer Adjustment Units) to the 925 DS1 SALs which are in-service (the Actual Units), the result of which is 1,425 DS1 SALs (the Adjusted Units) and rates continue to be applied at the 1001-3000 DS1 SAL threshold level. However, after applying the Transfer Adjustment, the customer is still short of its committed quantity of DS1 SALs and is subject to a shortfall penalty on the shortage which is calculated using the allowance per section 5.6.14 following.

As another example, assume Frontier Southwest Incorporated transfers a portion of its assets to an unaffiliated third party. Further assume that a customer who subscribes to a DS1 ETTVP with an eight (8) year commitment period and a committed quantity of 18,000 DS1 SALs (threshold level of 10,001 – 20,000 DS1 SALs) is three thousand (3,000) DS1 SALs short of its committed quantity at the next scheduled annual review following the Transfer, and that such shortage would normally result in the application of a shortfall penalty. Finally assume that three thousand (3,000) DS1 SALs were transferred to an unaffiliated third party in the Transfer and that the in-service quantity of DS1 SALs as measured at the next annual review is fifteen thousand (15,000). In this case, the Telephone Company will apply a Transfer Adjustment which adds the 3,000 DS1 SALs lost in the Transfer (the Transfer Adjustment Units) to the 15,000 DS1 SALs which are in-service (the Actual Units), the result of which is 18,000 DS1 SALs (the Adjusted Units) and rates continue to be applied at the 10,001 to 20,000 threshold level with no shortfall penalty being assessed to the customer.

© 2022 Frontier Communications Parent, Inc. All rights reserved..

2. GENERAL REGULATIONS (Cont'd)

2.10 Technology Migration

(A) General

When a customer (for purposes of this Section 2.10, the term customer includes an Interexchange Carrier or Interexchange Common Carrier as defined in Section 2.6 preceding, an End User as defined in Section 2.6 preceding, or a customer who purchases Expanded Interconnection Service pursuant to Section 17 following) who subscribes to a DS3 Service Period under Section 5.6.11 following, a DS1 Term Volume Plan (DS1 TVP/ETTVP) under Section 5.6.14 following, a DS3 Term Volume Plan (DS3 TVP) under Section 5.6.19 following, or National Discount Plan (NDP) under Section 23.1 following wishes to disconnect certain High Capacity Digital Services (each a Hi-Cap Disconnect) in order to replace them with a Telephone Company provided Ethernet private line service or a Telephone Company provided switched Ethernet service (each such service hereinafter referred to individually or collectively as a Replacing Service and each such replacement hereinafter referred to as a Technology Migration), the terms and conditions that apply to such Technology Migration are as follows:

(1) For customers who subscribed to a DS3 Service Period, to a DS1 TVP/ETTVP, to a DS3 TVP, or to NDP prior to December 2, 2010, the customer may choose to apply either the upgrade terms and conditions set forth in Section 5.6.11(G) following for the DS3 Service Period, Section 5.6.14(N) following for the DS1 TVP/ETTVP, Section 5.6.19(J) following for the DS3 TVP, or Section 23.1.7(H) following for NDP to a Technology Migration or the terms and conditions for a Technology Migration set forth in this Section 2.10. The terms and conditions that the customer chooses for its first such order placed on or after December 2, 2010, shall be the same terms and conditions that will apply to all of the customer's subsequent Technology Migration orders during the remainder of the current term commitment.

(2 For customers who subscribe to or renew their subscription to a DS3 Service Period, to a DS1 TVP/ETTVP, to a DS3 TVP, or to NDP on or after December 2, 2010, this Section 2.10 applies to Technology Migrations ordered on or after December 2, 2010.

(B) In the event a customer fails to specify the provision to be applied under (A)(1) preceding, the Telephone Company will apply the regulations in this Section 2.10 for the initial Technology Migration order submitted and for all future Technology Migration orders during the remainder of the current term commitment.

© 2022 Frontier Communications Parent, Inc. All rights reserved..

2. GENERAL REGULATIONS (Cont'd)

2.10 Technology Migration (Cont'd)

2.10.1 Service Under a DS3 Service Period

Liability under Section 5.6.11(E) following will not apply to the service(s) being disconnected if all of the requirements in Section 2.10.5 following are satisfied.

2.10.2 Service Under a DS1 Term Volume Plan (DS1 TVP/ETTVP)

(A) Effect on DS1 TVP/ETTVP Annual Review

In the first Annual Review following a Technology Migration and in all subsequent Annual Reviews until the expiration of the current term commitment, the Telephone Company will, for each Hi-Cap Disconnect that was replaced by a Replacing Service on or after December 2, 2010, include the DS1 SAL(s) for the Hi-Cap Disconnect in the calculation of the in-service DS1 SAL quantity as if such Hi Cap Disconnect had never occurred. Only those services that satisfy all of the requirements set forth in Section 2.10.5 following will be included in this calculation. The Annual Review process for a DS1 TVP/ETTVP is described in Section 5.6.14(G) following.

Upon renewal of the customer's DS1 TVP/ETTVP, the DS1 SALs of each Technology Migration that occurred during the expiring term commitment will not be included in the Annual Review calculations of the renewal term. However, for each Hi-Cap Disconnect that is replaced by a Replacing Service during the renewal term, the Telephone Company will include the number of DS1 SALs for such Technology Migration in the Annual Review calculations in the same manner that such DS1 SALs were included in the expiring term commitment.

(B) The customer remains responsible for satisfying any Minimum Period obligations on the service(s) being disconnected.

© 2022 Frontier Communications Parent, Inc. All rights reserved..

2. GENERAL REGULATIONS (Cont'd)

2.10 Technology Migration (Cont'd)

2.10.3 Service Under a DS3 Term Volume Plan

(A) Effect on DS3 TVP Annual Review

In the first Annual Review following a Technology Migration and in all subsequent Annual Reviews until the expiration of the current term commitment, the Telephone Company will include, for each Hi-Cap Disconnect that was replaced by a Replacing Service on or after December 2, 2010, the DS3 SAL(s) for the Hi-Cap Disconnect in the calculation of the average number of DS3 SALs which were actually in service over the preceding twelve (12) months as if such Hi-Cap Disconnect had never occurred. Only those services that satisfy all of the requirements set forth in Section 2.10.5 following will be included in this calculation. The Annual Review process for a DS3 TVP is described in Section 5.6.19(E) following.

Upon renewal of the customer's DS3 TVP, the DS3 SALs of each Technology Migration that occurred during the expiring term commitment will not be included in the Annual Review calculations of the renewal term. However, for each Hi-Cap Disconnect that is replaced by a Replacing Service during the renewal term, the Telephone Company will include the number of DS3 SALs for such Technology Migration in the Annual Review calculations in the same manner that such DS3 SALs were included in the expiring term commitment.

(B) The customer remains responsible for satisfying any Minimum Period obligations on the service(s) being disconnected.

© 2022 Frontier Communications Parent, Inc. All rights reserved..

2. GENERAL REGULATIONS (Cont'd)

2.10 Technology Migration (Cont'd)

2.10.4 Service Under a National Discount Plan

(A) Effect on NDP Annual True-Up

In the first Annual True-Up following a Technology Migration and in all subsequent Annual True-Ups until the expiration of the current term commitment, the Telephone Company will include, for each Hi-Cap Disconnect that was replaced by a Replacing Service on or after December 2, 2010, the number of equivalent DS1 CTs and the number of equivalent DS1 CMs for the Hi-Cap Disconnect in the calculation of the average number of equivalent DS1 CTs and equivalent DS1 CMs which were actually in service over the preceding twelve (12) months as if such Hi-Cap Disconnect had never occurred.

Upon renewal of the customer's NDP, the number of equivalent DS1 CTs and the number of equivalent DS1 CMs for each Technology Migration that occurred during the expiring term commitment will not be included in the Annual True-Up calculations of the renewal term. However, for each Hi-Cap Disconnect that is replaced by a Replacing Service during the renewal term, the Telephone Company will include the number of equivalent DS1 CTs and the number of equivalent DS1 CMs for such Technology Migration in the Annual True-Up calculations in the same manner that such equivalent DS1 CTs and equivalent DS1 CMs were included in the expiring term commitment.

Only those services that satisfy all of the requirements set forth in Section 2.10.5 following will be included in this calculation. The Annual True-Up process for an NDP is described in Section 23.1.7 following.

(B) The customer remains responsible for satisfying any Minimum Period obligations on the service(s) being disconnected.

© 2022 Frontier Communications Parent, Inc. All rights reserved..

2. GENERAL REGULATIONS (Cont'd)

2.10 Technology Migration (Cont'd)

2.10.5 Requirements for a Technology Migration

In order to qualify for a waiver of liability under Section 2.10.1 preceding for the DS3 Service Period or to qualify for the annual review calculations under Section 2.10.2 preceding for the DS1 TVP/ETTVP, the annual review calculations under Section 2.10.3 preceding for the DS3 TVP, or the true up calculations under Section 2.10.4 preceding for NDP, all of the following requirements must be satisfied.

(A) Length of Commitment Requirements

If one (1) Hi-Cap Disconnect is replaced with one (1) Replacing Service, the Replacing Service must be purchased with a term commitment equal to or longer than the number of months remaining in the term commitment of the Hi-Cap Disconnect. If the Replacing Service does not offer a term commitment that is equal to or longer than the number of months remaining in the term commitment for the Hi-Cap Disconnect, then the customer must elect the longest term offered for the Replacing Service in order to satisfy this requirement.

Example: The customer disconnects one (1) DS1 in order to replace it with one (1) Replacing Service. Assume that the customer has 24 months remaining on the DS1 term commitment period of 96 months. If the Replacing Service has a term period of at least 24 months, then the customer shall have satisfied this requirement.

If multiple Hi-Cap Disconnects are replaced with one (1) or more Replacing Services, each of the Replacing Services must be purchased with a term commitment equal to or longer than the most number of months remaining on the commitments of any of the Hi-Cap Disconnects. If the Replacing Service(s) does not offer a term commitment that is equal or longer than the most number of months remaining on the commitments of any of the Hi-Cap Disconnects, then the customer must elect the longest term offered for the Replacing Service(s) in order to satisfy this requirement.

© 2022 Frontier Communications Parent, Inc. All rights reserved..

2. GENERAL REGULATIONS (Cont'd)

2.10 Technology Migration (Cont'd)

2.10.5 Requirements for a Technology Migration (Cont'd)

(A) Length of Commitment Requirements (Cont'd)

Example 1: The customer disconnects two (2) DS1s in order to replace them with one (1) Replacing Service. Assume that the customer has 24 months remaining on a DS1 term commitment period of 5 years and 18 months remaining on a DS1 term commitment period of 3 years. If the Replacing Service has a term period of at least 24 months, then the customer shall have satisfied this requirement.

Example 2: Assume that in Example 1 above, one of the DS1s has seventy (70) months remaining on a DS1 term commitment period of 8 years and that the longest term commitment offered on the Replacing Service is 60 months. The customer would have to elect the 60-month term commitment for its Replacing Service in order to satisfy this requirement.

(B) Bandwidth Requirements

The sum of the bandwidth of the Replacing Service(s) is equal to or greater than the sum of the bandwidth of the Hi-Cap Disconnects.

Example: If a customer disconnects two (2) DS1s in order to replace them with one (1) 10 Mbps Replacing Service, then the customer shall have satisfied this requirement.

© 2022 Frontier Communications Parent, Inc. All rights reserved..

2. GENERAL REGULATIONS (Cont'd)

2.10 Technology Migration (Cont'd)

2.10.5 Requirements for a Technology Migration (Cont'd)

(C) Revenue Test Requirements

The Technology Migration must satisfy one of the following revenue tests:

(1) MRC Revenue Test

The MRC Revenue Test requires the monthly recurring charges (MRCs) of the Replacing Service(s), counting only those discounted rate elements included in the term plan for the Replacing Service(s), be equal to or greater than the MRCs of the Hi-Cap Disconnect(s), counting only those discounted rate elements included in the term plan for the Hi-Cap Disconnect(s).

For example, assume a customer disconnects its High Capacity Digital DS1 Service (Hi-Cap DS1 Disconnect) in order to replace it with a 100 Mbps Replacing Service. Further assume all of the following:

- the Hi-Cap DS1 Disconnect is provided under a DS1 TVP with a commitment period of 5 years at a rate of $220.98 per month for the discounted rate elements; and
- the 100 Mbps Replacing Service is provided under a term plan with a 5 year commitment at a rate of $900.00 per month for the discounted rate elements.

Since the MRC of $900.00 for the 100 Mbps Replacing Service is greater than the MRC of $220.98 for the Hi-Cap DS1 Disconnect, the customer shall have satisfied this requirement.

© 2022 Frontier Communications Parent, Inc. All rights reserved..

2. GENERAL REGULATIONS (Cont'd)

2.10 Technology Migration (Cont'd)

2.10.5 Requirements for a Technology Migration (Cont'd)

(C) Revenue Test Requirements (Cont'd)

(2) Overall Value/Revenue Test

The Overall Value/Revenue Test requires the overall value of the Replacing Service(s) be equal to or greater than the overall value of the remaining months of the current term commitment of the Hi-Cap Disconnect(s). The overall value of the Replacing Service(s) is calculated by multiplying the MRCs for the Replacing Service(s), counting only those discounted rate elements included in the term plan for the Replacing Service(s), by the number of months in the term commitment. The overall value of the Hi-Cap Disconnect(s) is calculated by multiplying the MRCs currently in effect for the Hi-Cap Disconnect(s), counting only those discounted rate elements included in the term plan for the Hi-Cap Disconnect(s), by the total remaining months in the current term commitment.

For example, using the same assumptions in the example for the MRC revenue test in (1) preceding, further assume the customer disconnects the High Capacity Digital DS1 Service in month thirty-six (36) of the 5 year commitment period (twenty-four (24) months remaining in the commitment period of the DS1 TVP for the Hi-Cap DS1 Disconnect).

Based on the above, the overall value of the Hi-Cap DS1 Disconnect is $5,303.52 ($220.98 x 24 months remaining) and the overall value of the 100 Mbps Replacing Service is $54,000 ($900.00 x 60 months). Since the overall value of the 100 Mbps Replacing Service is greater than the overall value of the Hi-Cap DS1 Disconnect, the customer shall have satisfied this requirement.

© 2022 Frontier Communications Parent, Inc. All rights reserved..

2. GENERAL REGULATIONS (Cont'd)

2.10 Technology Migration (Cont'd)

2.10.5 Requirements for a Technology Migration (Cont'd)

(D) Terminating Location Requirements

Terminating locations include End User locations, Interexchange Carrier locations, and physical or virtual EIS locations pursuant to Section 17 following.

(1) One Hi-Cap Disconnect Replaced by One Replacing Service

The terminating location(s) of the Replacing Service must satisfy one of the following requirements:

(a) For service provided between two End User locations or two Interexchange Carrier locations, at least one of the locations of the Replacing Service must be the same as one of the locations of the Hi-Cap Disconnect; or

(b) For service provided between an Interexchange Carrier location or a physical or virtual EIS location and an End User location, one of the locations of the Replacing Service must be the same as the End User location of the Hi-Cap Disconnect.

(c) For a multiplexed facility provided between an Interexchange Carrier location, a physical or virtual EIS location, or an End User location and a Telephone Company Hub where multiplexing functions are performed, one of the locations of the Replacing Service must be the same as the Interexchange Carrier location, physical or virtual EIS location, or End User location, respectively, of the Hi-Cap Disconnect.

© 2022 Frontier Communications Parent, Inc. All rights reserved..

2. GENERAL REGULATIONS (Cont'd)

2.10 Technology Migration (Cont'd)

2.10.5 Requirements for a Technology Migration (Cont'd)

(D) Terminating Location Requirements (Cont'd)

(2) Multiple Hi-Cap Disconnects Replaced by One or More Replacing Services

When multiple Hi-Cap Disconnects are replaced by one or more Replacing Services, at least one of the locations for each of the Replacing Service must be the same location as each of the End User locations of each of the Hi-Cap Disconnects, except where the locations involved are two (2) Interexchange Carrier locations or two (2) End User locations in which case at least one of the locations for each of the Replacing Service must be the same as one of the Interexchange Carrier locations or End User locations, respectively, of each of the Hi-Cap Disconnects.

Example where both locations are End User locations: The customer has a High Capacity Digital DS1 Service between locations A and B and a High Capacity Digital DS1 Service between locations C and D. The two Replacing Services are between locations B and E and between locations D and F. Since each High Capacity Digital DS1 Service has one location in common with its Replacing Service, this requirement is satisfied.

Example where all locations are End User locations: The customer has three (3) High Capacity Digital DS1 Services between locations A and B, C and D, and E and F. The two Replacing Services are between locations B and X and between locations D and Y. Since the Replacing Services do not have a common location with the High Capacity Digital DS1 Service between locations E and F, this requirement is not satisfied. However, if the customer qualifies for a one-for-one replacement under (D)(1) preceding, this requirement would be satisfied for two of the High Capacity Digital DS1 Services. The High Capacity Digital DS1 Service between locations E and F, for which no common location exists, would not meet the requirements for a Technology Migration.

© 2022 Frontier Communications Parent, Inc. All rights reserved..

2. GENERAL REGULATIONS (Cont'd)

2.10 Technology Migration (Cont'd)

2.10.5 Requirements for a Technology Migration (Cont'd)

(E) Timing Requirements

The order for each Hi-Cap Disconnect must be completed within three (3) months of the date that the Replacing Service(s) is installed. Failure to disconnect each Hi-Cap Disconnect within three (3) months will result in the customer not satisfying this requirement.

(F) Notification Requirements

Within ten (10) business days of the date the Replacing Service(s) is ordered, the customer must provide the Telephone Company with all of the following:

(1) the circuit identification number(s) of each Hi-Cap Disconnect; and
(2) the circuit identification number(s) of the Replacing Service(s); and
(3) the terminating locations of the services involved (including both the Replacing Service(s) and the Hi-Cap Disconnect(s)).

Failure to provide such information within the stated timeframe will result in the customer not satisfying this requirement.

© 2022 Frontier Communications Parent, Inc. All rights reserved..

2. GENERAL REGULATIONS (Cont'd)

2.11 Initial Transfer of Assets from Predecessor Company (N)

The original issuing carriers of this Guide were created by a transfer of assets from an unaffiliated third party. This Section 2.11 governs treatment of customers who, at the time of the transfer of assets from the predecessor company, subscribed to a service offering under this Guide that aggregates the customer's purchases from the Telephone Company to measure compliance with such service offering or participated in an SLA that aggregates the customer's measured transactions.

(A) When a customer subscribes to a service offering under this Guide that aggregates the customer's purchases from the Telephone Company to measure compliance with such service offering or the customer participates in a SLA that aggregates the customer's measured transactions, and the service offering or SLA includes terms and conditions pertaining to a transfer, the terms and conditions pertaining to a transfer will apply to that service offering or SLA as if the Telephone Company were the predecessor company.

(B) When customer subscribes to a service offering under this Guide that aggregates the customer's purchases from the Telephone Company to measure compliance with such service offering or the customer participates in a SLA that aggregates the customer's measured transactions, and the service offering or SLA does not include terms and conditions pertaining to a Transfer, Sections 2.9 preceding will apply as if the Telephone Company were the predecessor company.

For example, if a customer subscribed to a service offering with the predecessor company that aggregates the customer's measured transactions, and the transfer of assets resulted in the customer meeting the conditions described in 2.9.1(B) and (C) preceding with respect to the assets transferred to the Telephone Company, the provisions of 2.9.2 preceding will apply with respect to prorating any Minimum Requirements. (N)

© 2022 Frontier Communications Parent, Inc. All rights reserved..

3. ORDERING OPTIONS FOR FIA

3.1 General

This section sets forth the regulations and order related charges for FIA Orders to provide the customer with FIA. These charges are in addition to other applicable charges in other sections of this tariff.

3.1.1 Ordering Conditions

(A) A customer may order any amount of FIA (Switched or Special) of the same interface type, same Feature Group, same BSA or same Special Access between the same locations for installation on the same date on a single FIA ASR. A customer may order the shared use of Switched Access and Special Access over the same high capacity facility however, separate FIA ASRs are required. The methodology for shared use is set forth in 5.6.7.

- ASRs for FGA or BSA-A must specify the number of lines required.

- ASRs for FGB, FGD, BSA-B, BSA-D and SAC Access Service must specify the number of trunks required or Busy Hour Minutes of Capacity (BHMC). For Tandem-Switched Transport, the customer has the option of specifying the number of trunks or Busy Hour Minutes of Capacity (BHMC).

  In addition, the ASR must indicate whether the Switched Transport ordered is for Entrance Facilities, Direct-Trunked Transport and/or Tandem-Switched Transport. For Direct-Trunked Transport, and Entrance Facilities the ASR must specify channel type, channel interface, and any options desired. In addition, ASRs for Direct- Trunked Transport must specify Facility Hubs involved.

Additional ASR requirements for Switched Access Service are described in 4.2.5(V) and 4.3.2.

© 2022 Frontier Communications Parent, Inc. All rights reserved..

3. ORDERING OPTIONS FOR FIA (Cont'd)

3.1 General (Cont'd)

This section sets forth the regulations and order related charges for FIA Orders to provide the customer with FIA. These charges are in addition to other applicable charges in other sections of this tariff.

3.1.1 Ordering Conditions (Cont'd)

(B) The customer shall supply all details necessary to complete an order. The details may include the following: requested service date, customer name, customer designated location, end office, Interface Arrangement, type of Switched Access or Special Access, Supplemental Features, End Office Services and Signaling Interface, and originating and terminating capacity required. The customer may also be required to provide end user name and location, end user contact person, and end user premises access information to complete an order for Special Access.

When a customer orders mixed interstate and intrastate Switched Access, the customer is required to provide an estimate of the percent of traffic, as described in 4.3.3, which will be interstate. If the customer fails to provide this estimate, the order will not be processed until such time as the customer provides this estimate.

When a customer orders mixed use special access service, the customer must indicate the jurisdiction based on the criteria in Section 5.1.6.

(C) When the Alternate Traffic Routing Optional Arrangement is ordered, more than one CDL will be supplied and the number of trunks or BHMC for FGB and FGD to each CDL shall be specified.

When the Alternate Traffic Routing Basic Serving Element (BSE) is ordered, more than one CDL will be supplied and the number of trunks or BHMC for BSA-B and BSA-D to each CDL shall be specified.

© 2022 Frontier Communications Parent, Inc. All rights reserved..

3. ORDERING OPTIONS FOR FIA (Cont'd)

3.1 General (Cont'd)

3.1.1 Ordering Conditions (Cont'd)

(D) The customer shall order SAC Access Service, as described in 4.2.1(E), in the same manner as ordering FGD or BSA-D with the following exceptions. For 500 SAC Access Service or 900 SAC Access Service, customers may request direct connections to only those offices designated by the Telephone Company as 500 SAC Access Service or 900 SAC Access Service screening offices. All 500 NXX or 900 NXX code assignments and administration shall be in accordance with the North American Numbering Plan (NANP). Toll Free* SAC Access Service is offered only in conjunction with the Toll Free* Customer Identification Function as described in 4.2.11 and in conjunction with Toll Free* Data Base Query Service as described in 4.2.19. Customers may request Toll Free* SAC access connections to suitably equipped end offices and access tandem offices. A list of those offices will be provided upon request. All Toll Free* number assignments shall be administered by the Number Administration Service Center (NASC) through the Service Management System (SMS).

500 NXX codes or 900 NXX codes to be activated and/or deactivated in conjunction with 500 SAC Access Service or 900 SAC Access Service, must be provided to the Telephone Company at least 30 business days prior to the effective date of the change.

An ASR is required by the Telephone Company for 500 NXX codes or 900 NXX codes to be activated or deactivated on an access facility level basis. The Switched Access Ordering Charge, as described in 4.5.2(A)(3)(g), will apply. In addition to the Switched Access Ordering Charge, the NXX Translation Charge, as described in Section 4.5.2(H)(8), shall apply to each 500 NXX code activated or deactivated in a Telephone Company switch capable of performing the customer identification function for 500 SAC Access Service. Customer assigned codes for which an ASR has not been received will be blocked.

"Toll Free" is considered to mean any access service which utilizes any of the following NPAs: 800, 888, 877, 866, 855, 844, 833, and 822 as they become available to the industry.

© 2022 Frontier Communications Parent, Inc. All rights reserved..

3. ORDERING OPTIONS FOR FIA (Cont'd)

3.1 General (Cont'd)

3.1.1 Ordering Conditions (Cont'd)

(D) (Cont'd)

When SAC Access Service is not terminated over a Special Access Line as in 5.1.1(C)(2), the customer must notify the Telephone Company of all local exchange telephone numbers to which SAC Access Service traffic is designated so that the Telephone Company can balance the end office in accordance with standard Telephone Company engineering practices for heavy volume lines.

(E) Reserved for Future Use

(F) The provision of Special Access requires the selection of a Terminating Option as defined in 5.3. The provision of Switched Access requires an Entrance Facility as defined in 4.2.3(B). When a customer orders a DS3 SAL or DS3 Switched Entrance Facility, he may specify, on the ASR, if the interface is to be electrical or optical. In the event the customer does not specify an interface preference for DS3, the Telephone Company will provide an electrical interface.

When a customer orders a FiberConnect SAL the customer must specify an electrical interface and indicate the Network Channel Interface (NCI) code on the ASR. Each FiberConnect SAL accommodates four (4) DS1 transports.

(G) When ordering Common Channel Signaling System 7 (CCS7) Access service as described in 4.2.10 and 4.5.2(G), the customer shall place an order for interconnection between the Telephone Company's Signal Transfer Point (STP) and the CDL. CCS7 Access service shall be ordered and installed pursuant to specifications in Technical Reference GR-905-CORE, Issue 11. Each service application used in conjunction with CCS7 Access service will require a separate ASR. When ordering additions or changes to existing CCS7 Access service facilities, the customer must refer to the specific CCS7 Access service facilities affected by the addition or change.

© 2022 Frontier Communications Parent, Inc. All rights reserved..

(I)

3. ORDERING OPTIONS FOR FIA (Cont'd)

3.1 General (Cont'd)

3.1.1 Ordering Conditions (Cont'd)

(H) When ordering Line Information Data Base (LIDB) Query Service, the customer shall provide an ASR specifying the originating point codes (OPCs) of the customer's designated operator service system (OSS) sending the query or queries, and the desired due date of the order. LIDB Query Service is provided in conjunction with interconnection to the Telephone Company's SS7 network as set forth in Sections 4 and 8.8.

(I) An ASR is required from the customer to request the unblocking of 0+900 calls. For an initial customer order at the tandem or end office level, the Telephone Company must receive the request to unblock 0+900 dialing capability at least 60 business days prior to the requested effective date. To block or unblock 0+900 dialing capability for NXX codes assigned to a customer in an end office subtending a previously unblocked tandem, a request must be received at least 30 business days prior to the requested effective date of the change.

(J) An ASR is required from the customer to add 1+ coin traffic from an end office. At the customer's option, the ASR can be issued at a 1+ coin tandem or end office level. For an initial customer order at a 1+ coin tandem, the Telephone Company must receive the request at least 120 calendar days prior to the requested effective date. Standard provisioning intervals will apply to subsequent orders involving that 1+ coin tandem.

The customer must provide the Telephone Company with written notification stating that an order is being submitted pursuant to an agreement with a secondary service provider prior to the routing of 1+ interLATA coin traffic to a provider other than the customer.

(K) Reserved for Future Use

© 2022 Frontier Communications Parent, Inc. All rights reserved..

(J) FACILITIES FOR INTERSTATE ACCESS

3. ORDERING OPTIONS FOR FIA (Cont'd)

3.1 General (Cont'd)

3.1.1 Ordering Conditions (Cont'd)

(L) When ordering Signaling System 7 (SS7) Out of Band Signaling as described in 4.2.5(AA), the customer shall provide an ASR specifying a reference to existing CCS7 Access service facilities or reference to a related ASR for CCS7 Access service as described in 3.1.1(G). The customer's ASR shall also include STP point codes, STP location identifier codes, FGD or BSA-D trunk or Toll Free* Service Access trunk circuit identification codes, and switch type. When ordering SS7 Out of Band Signaling for FGD or BSA-D, the customer shall specify that all traffic carried by that FGD or BSA-D will be equipped with out of band signaling. The customer shall work cooperatively with the Telephone Company to determine the number of CCS7 Access service connections required to handle the customer's SS7 Out of Band Signaling traffic.

(M) When ordering Expanded Interconnection Services (EIS) as described in 17.5, the customer shall place an ASR for the Cross Connect, as described in 4.5.3 and 5.1.1(D), to interconnect the facilities of the Telephone Company to the facilities of the customer. Each service application used in conjunction with EIS will require a separate ASR. When ordering additions or changes to the existing EIS facilities, the customer must refer to the specific EIS facilities affected by the addition or change.

(N) When a customer orders Tandem Switch Signaling (TSS), as described in 4.2.5(AC) and 4.2.21, to be established with the installation of a new FGD or BSA-D trunk group, 500 SAC Access Service, or 900 SAC Access Service trunk group, the Switched Access Ordering charge, per ASR and the appropriate Service Installation charge will apply for the installation of the FGD or BSA-D or 900 SAC Access services.

When a customer orders Tandem Switch Signaling to be added to an existing FGD or BSA-D trunk group, 500 SAC Access Service or 900 SAC Access Service trunk group or to a pending ASR, only the Switched Access Ordering charge and the Design Change charge will apply for the addition of the optional arrangement.

"Toll Free" is considered to mean any access service which utilizes any of the following NPAs: 800, 888, 877, 866, 855, 844, 833, and 822 as they become available to the industry.

© 2022 Frontier Communications Parent, Inc. All rights reserved..

3. ORDERING OPTIONS FOR FIA (Cont'd)

3.1 General (Cont'd)

3.1.1 Ordering Conditions (Cont'd)

(O) When ordering FGD or BSA-D Switched Access with 950-XXXX Access as described in 4.2.5(T), the customer shall provide an ASR specifying which 950-XXXX access code(s) are to be routed and the FGD or BSA-D Switched Access Service over which resulting originating 950-XXXX access code calls are to be routed.

(P) When ordering Carrier Identification Parameter (CIP) as described in 4.2.5(AE), the customer shall provide an ASR specifying a reference to existing FGD or BSA-D switched access services or reference to a related ASR for FGD or BSA-D switched access services. The customer's ASR shall specify the information necessary to identify the trunk group to which the CIP is to be added.

© 2022 Frontier Communications Parent, Inc. All rights reserved..

3. ORDERING OPTIONS FOR FIA (Cont'd)

3.1 General (Cont'd)

3.1.2 Provision of Other Services

(A) At the option of a customer, Directory Assistance, Additional Labor, Telecommunications Service Priority (TSP), Testing, LIDB Query Service and Special Routing services may be ordered with an ASR at the same time the ASR is accepted by the Telephone Company. Such requests will be considered to be supplemental to the ASR. The rates and charges for these services as set forth in other sections of this tariff will apply in addition to the ordering charges set forth in this section and the rates and charges for the Switched Access or Special Access with which they are associated.

(B) The items listed in (A) preceding may subsequently be added to the ASR at any time, up to and including the service date established by the ASR. When ordered subsequently, charges for ASR modifications as set forth in 3.2.2 will apply.

3.1.3 Special Construction

(A) When the Telephone Company determines that the installation of service meets the guidelines of the Special Construction tariffs as set forth in Section 1.3 preceding, the customer is notified and conditions are negotiated as prescribed by the Special Construction tariffs.

(B) The regulations, rates and charges for Special Construction (as set forth in the tariffs referenced in Section 1.3 preceding) are in addition to the regulations, rates and charges specified in this section.

(C) Special Construction is not applicable to EIS.

3.1.4 Expanded Interconnection Service (EIS)

The regulations, rates and charges for EIS in Section 17 are in addition to the regulations, rates and charges specified in this section.

3.1.5 Tandem Switch Signaling

The regulations, rates and charges for Tandem Switch Signaling in Section 4 and are in addition to the regulations, rates and charges specified in this section.

© 2022 Frontier Communications Parent, Inc. All rights reserved..

3. ORDERING OPTIONS FOR FIA (Cont'd)

3.1 Access Service Request

An ASR is used by the Telephone Company to receive orders for the following types of FIA requested by the customer:

Switched Access as in Section 4,
Special Access as in Section 5,
Expanded Interconnection Service as in Section 17, and
Other Services as in other sections of the tariff.

3.2.1 Service Date Intervals

The time required to provision service is known as the service date interval. Such intervals will be established in accordance with published service date interval guidelines which are available to customers upon request. The service date interval guidelines will apply to ASRs and will specify the quantities of FIA that can be provided on the same service date. The customer may request a service date other than that established pursuant to the service date interval guidelines, and the Telephone Company, where possible, will establish the service date in accordance with such request, subject, however, to other applicable provisions of this tariff.

© 2022 Frontier Communications Parent, Inc. All rights reserved..

3. ORDERING OPTIONS FOR FIA (Cont'd)

3.2 Access Service Request (Cont'd)

3.2.2 ASR Modifications

The customer may request a modification of its ASR prior to the service date. The Telephone Company will make every effort to accommodate a requested modification when it is able to do so with the normal work force assigned to complete such an ASR within normal business hours. If the modification cannot be made with the normal work force during normal business hours, the Telephone Company will notify the customer. If the customer still desires the ASR modification, the Telephone Company will schedule a new service date. All charges for ASR modifications will apply on a per occurrence basis.
Where a new ASR may be required the appropriate charges in other sections of this tariff will be applicable.

Any increase in the number of Switched Access lines for FGA or BSA-A trunks or BHMCs for FGB, FGD, BSA-B, BSA-D and SAC Access Service; Special Access circuits; STP Port Terminations and CCS7 access facilities; or OSS OPCs in conjunction with LIDB Query Service, and Advanced Communications Network services will require the issuance of a new ASR for the incremental capacity.

(A) Service Date Change Charge

ASR service dates for the installation of new services or rearrangement of existing services may be changed. Except as otherwise specified in Section 3.2.6(C)(3), a Service Date Change Charge will apply for each service date change after the plant test date of the original ASR.

For Switched Access Tandem-Switched Transport or ASRs requesting additional trunk activations on existing Direct-Trunked Transport facilities, the new service date may not exceed the original service date by more than 30 calendar days. If the requested service date is more than 30 calendar days after the original service date, the ASR will be canceled by the Telephone Company and cancellation charges in 3.2.6 will apply.

For Special Access, Optical Networking, as applicable, Switched Access Entrance Facilities, and Switched Access Direct-Trunked Transport, subject to Section 3.2.6 following, a customer may negotiate an extension of a service date of an ASR for installation of new services or rearrangements of existing services.

With the agreement of the Telephone Company, a new service date may be established that is prior to the original service date and the provisions in (E) will apply in addition to the Service Date Change Charge.

© 2022 Frontier Communications Parent, Inc. All rights reserved..

3. ORDERING OPTIONS FOR FIA (Cont'd)

3.2 Access Service Request (Cont'd)

3.2.2 ASR Modifications (Cont'd)

(A) Service Date Change Charge (Cont'd)

Jurisdiction	Rate
California	
Special Access	
Price Cap	$64.00
Price Bands A, B and C	$64.00
All Other Services	$64.00
Florida Special Access	
Price Cap	$57.16
Price Bands A, B and C	$57.16
All Other Services	$57.16
Texas Special Access	
Price Cap	$56.99
Price Bands A, B and C	$56.99
All Other Services	$56.99

© 2022 Frontier Communications Parent, Inc. All rights reserved..

3. ORDERING OPTIONS FOR FIA (Cont'd)

3.2 Access Service Request (Cont'd)

3.2.2 ASR Modifications (Cont'd)

(B) Partial Cancellation Charge

Any decrease in the number of Switched Access lines for FGA or BSA-A; trunks or BHMCs for FGB, FGD, BSA-B, BSA-D and SAC Access Service; Special Access circuits; STP Port Terminations and CCS7 switched access facilities; OSS OPCs in conjunction with LIDB Query Service, or Advanced Communications Network services will be treated as a partial cancellation.

A customer may cancel any number of Special Access circuits or Advanced Communications Network services.

When a customer partially cancels the service ordered on an ASR, charges will apply as follows:

(1) Except as specified in 3.2.6(D), when an ASR for Switched Access Service is partially canceled on or after the Application Date, the charge will be determined by multiplying the total Installation nonrecurring charges for the canceled portion of the order by the number of business days elapsed since the Application Date and dividing that figure by the number of days in the service interval and adding the Switched Access Ordering Charge.

(2) When an ASR for Special Access Service or Advanced Communications Network service is partially canceled, on or after the Application Date, the charge will be determined by multiplying the total Special Access or Advanced Communications Network services nonrecurring charges for the canceled portion of the order by the number of business days elapsed since the Application Date and dividing that figure by the number of days in the service interval.

(3) When a customer cancels part of an ASR for which billing has commenced as provided in 3.2.2(A) and 3.2.6(A), cancellation charges in 3.2.6(C)(3) will apply to that part of the ASR being canceled.

© 2022 Frontier Communications Parent, Inc. All rights reserved..

3. ORDERING OPTIONS FOR FIA (Cont'd)

3.2 Access Service Request (Cont'd)

3.2.2 ASR Modifications (Cont'd)

C. Discontinuance of Service

A customer may discontinue FIA that is in service at any time. The request for discontinuance of service must be received by the Telephone Company at least thirty (30) business days prior to the date on which service is to (C)
be disconnected and billing discontinued. The disconnect request may
be submitted via the same method(s) used to place orders. The customer must notify the Telephone Company of a delay or cancellation in the discontinuance request prior to the disconnect date. The Telephone Company, where possible, will establish the disconnect date in accordance with such request. Billing and service will then continue until the new requested disconnect date. If a service is discontinued prior to the expiration of the Minimum Period in 3.2.4, the Minimum Period Charges in 3.2.5, may apply.

D. Design Change Charge

The customer may request a design change to a pending ASR for both Switched and Special Access or request a change to an existing Switched Access Service. A design change is a change which requires engineering review. The regulations, rates and charges for a design change are in Section 4.5.2(A)(3)(i) for Switched Access Service, and Section 5.6.1(F)(1) for Special Access Service, and are in addition to the regulations, rates and charges specified in this section.

E. Requests for Expedition

A customer may request an expedited service date. When this situation occurs, charges will be applicable as in 6.2. The Telephone Company will provide an estimate of the charges to the customer. The customer must accept the price estimate prior to the Telephone Company's performing the expedite. The actual charges billed to the customer will be no more than 10 percent over the estimate.

Access Ordering Guidelines prohibit expedite orders when disconnecting (N)
services.

F. Discontinuance Non-Recurring Charges (N)

In addition to any other charges associated with discontinuance of services, the Telephone Company will charge a discontinuance non-recurring charge to discontinue services. This charge applies on a per circuit basis. The customer shall be responsible for payment of a discontinuance non-recurring charge equivalent to one (1) month of recurring charges for the Guide rate elements billed on the circuit immediately prior to disconnect. In addition to the discontinuance non-recurring charge, minimum service period charges and early termination liability may apply if the circuit term or minimum service period has not been met. (N)

(

Selection of Facilities for Access Service

A) Requests for a specific circuit is not an option of the customer except as provided for under Special Facilities Routing of FIA in Section 9.

© 2024 Frontier Communications Parent, Inc. All rights reserved..

3. ORDERING OPTIONS FOR FIA (Cont'd)

3.2 Access Service Request (Cont'd)

3.2.3 Minimum Period

(A) The Minimum Period for which Special Access, End User FIA, STP Port Terminations, Basic Service Elements (BSEs) CCS7 Access facilities, Monthly Optical Networking rate elements, Presubscribed Interexchange Carrier Charge are provided and for which charges are applicable, is one month, except as in B through O following or in other sections of this tariff.

(B) The Minimum Period for Miscellaneous Services is in Section 6.

(C) The Minimum Period for Ancillary Services is in Section 8.

(D) The Minimum Period for temporary videoband and program audio Special Access is the minimum period for which rates are established in Section 5.7 and 5.8.

(E) (Reserved for future use.)

(F) The Minimum Period for FGA, FGB, FGD, BSA-A, BSA-B, BSA-D, and SAC Access Service is one month. For the application of the minimum period charges for Switched Access Service FGB, FGD, BSA-B, BSA-D, and SAC Access Service it is assumed the last identical capacity placed in service is the first one discontinued.

(G) (Reserved for Future Use)

(H) The minimum periods for Special Access DS3 Service are in Section 5.6.11.

(I) The minimum periods for Expanded Interconnection Services are in Section 17.9.2.

(J) The minimum period for the month-to-month option for VideoConnect - 270 Mbps service is 3 months.

(K) The minimum periods for Advanced Communications Network services are set forth under Section 16.

(L) (Reserved for Future Use)

© 2022 Frontier Communications Parent, Inc. All rights reserved..

3. ORDERING OPTIONS FOR FIA (Cont'd)

3.2 Access Service Request (Cont'd)

3.2.3 Minimum Period

(M) The minimum period for Special Access DS3 Service and Special Access DS1 Service that is included in the National Discount Plan is set forth in Section 23.1.8 following.

(N) The minimum period for Special Access DS1 Service that is included in an Eight and Ten Year DS1 Term Volume Plan (ETTVP) is set forth in Section 5.6.14(H) following.

(O) The minimum period for Special Access DS3 Service that is included in a DS3 Term Volume Plan (DS3 TVP) is set forth in Section 5.6.19(M) following.

© 2022 Frontier Communications Parent, Inc. All rights reserved..

3. ORDERING OPTIONS FOR FIA (Cont'd)

3.2 Access Service Request (Cont'd)

3.2.5 Minimum Period Charges

When FIA are discontinued prior to the expiration of the Minimum Period, charges are applicable for the remaining month(s) and/or fraction thereof of the Minimum Period.

Except as specifically stated in other sections of this tariff, the Minimum Period Charge will be determined as follows:

(A) For Switched Access usage sensitive rate elements, the charge for the minimum period, or fraction thereof, is equal to the applicable rates for the actual or assumed usage for the minimum period or such fraction thereof. For Switched Access flat-rated monthly elements (i.e., Entrance Facility, Direct-Trunked Transport and Multiplexing rates), the charge for the minimum period or fraction thereof is the applicable monthly rates for the service.

(B) For Special Access, the charge is the applicable monthly rate for the service(s) as specified in Section 5.7. For Special Access DS3 Service, additional information regarding the calculation of service period charges can be found in Section 5.6.

(C) For End User Common Lines, the charge is the applicable monthly rate for the FIA as in 13.11.

(D) (Reserved for Future Use)

(E) For part time or occasional program audio Special Access services, the rates in 5.6.1, 5.7, and 5.8 will apply.

(F) (Reserved for Future Use)

(G) (Reserved for Future Use)

(H) For the Presubscribed Interexchange Carrier Charge, the charge is the applicable monthly rate as in Section 12.

(I) For services provided under a National Discount Plan (NDP), the discount percentage specified in Section 23.1 following shall be applied to the applicable monthly rates.

© 2022 Frontier Communications Parent, Inc. All rights reserved..

3. ORDERING OPTIONS FOR FIA (Cont'd)

3.2 Access Service Request (Cont'd)

3.2.6 Cancellation of an ASR

(A) A customer may cancel ordered FIA on any date prior to the service date. The cancellation date is the date the Telephone Company receives written or verbal notice from the customer that the ASR is to be canceled. The verbal notice must be followed by written confirmation within 10 days.

For Switched Access Tandem-Switched Transport or ASRs requesting additional trunk activations on existing Direct-Trunked Transport facilities, if a customer is unable to accept service within 30 calendar days of the original service date, the ASR shall be considered canceled and charges in (C) will apply. In such instances, the cancellation date shall be the 31st calendar day beyond the original service date of the ASR.

For Special Access Service, Optical Networking, as applicable, Switched Access Entrance Facilities and Switched Access Direct-Trunked Transport, if a customer or a customer's end user is unable to accept service within 30 calendar days of the original service date, the customer may elect one of the following options:

The customer may take no action and the ASR shall be canceled by the Telephone Company on the 31st day with the appropriate Cancellation Charge as set forth in this tariff applied; or

The customer may choose to commence billing for the service on the 31st day.

(B) ASR costs are considered to have started when the Telephone Company incurs any cost in connection therewith or in preparation thereof which would not otherwise have been incurred. These costs include but are not limited to preliminary engineering, orders to suppliers, and other similar items of cost.

© 2022 Frontier Communications Parent, Inc. All rights reserved..

3. ORDERING OPTIONS FOR FIA (Cont'd)

3.2 Access Service Request (Cont'd)

3.2.6 Cancellation of an ASR (Cont'd)

(C) When a customer cancels an ASR for the installation of new service, or an ASR to modify existing service, charges will apply as follows:

1. When an ASR for Switched Access Service is canceled on or after the Application Date, the Cancellation Charge is calculated, on a per ASR basis, by multiplying the total Installation nonrecurring charges for the quantity ordered by the number of business days elapsed since the Application Date, and dividing that figure by the number of days in the service interval (i.e., the number of business days between the Application Date and the last day of the service date interval) and adding the Switched Access Ordering Charge.

(2) When an ASR for Special Access Service or Optical Networking, as applicable, is canceled on or after the Application Date, except where there is a specific cancellation charge set forth such as after the 30th day, the Cancellation Charge is the Nonrecurring Charge for the service(s) multiplied by the quantity ordered on a per ASR basis.

© 2022 Frontier Communications Parent, Inc. All rights reserved..

3. ORDERING OPTIONS FOR FIA (Cont'd)

3.2 Access Service Request (Cont'd)

3.2.6 Cancellation of an ASR (Cont'd)

(C) (Cont'd)

(3) When a customer chooses the option to commence billing for the service on the 31st day under 3.2.6(A) preceding, the customer must submit an ASR Modification to the existing ASR prior to calendar day 31 from the original service date to request a new service date. The new service date may not exceed the original service date by more than 120 calendar days. A Service Date Change Charge will not apply for such service date change; however, if subsequent additional service date changes are requested after calendar day 31, the Service Date Change Charge will apply, per request.

When a customer chooses the option to commence billing for the service on the 31st day under 3.2.6(A) preceding, monthly recurring charges for the service will begin accruing at calendar day 31 after the original service date. The initial or subsequent bill for the service will include these accrued charges and any additional nonrecurring charges in addition to billable charges specified in 2.4.1(C).

If the customer requested service date is more than 120 calendar days after the original service date, or if the customer or the customer's end user is unable to accept Access Service within 120 calendar days of the original service date, the ASR will be canceled by the Telephone Company on the 121st day. In the event of any such cancellation, or if the customer cancels the order after the 30th day, the customer will be billed the accrued monthly recurringcharges specified preceding plus applicable nonrecurring charges. These charges will be computed commencing at day 31 after the original service date up to and including the cancellation date. The customer will be responsible for applicable minimum period and termination liability charges.

(D) (Reserved of Future Use)

© 2022 Frontier Communications Parent, Inc. All rights reserved..

3. ORDERING OPTIONS FOR FIA (Cont'd)

3.2 Access Service Request (Cont'd)

3.2.6 Cancellation of an ASR (Cont'd)

For (E) through (I) following, the cancellation charge is the charge shown for the last date passed on the order and will apply when a customer cancels an order or part of an order prior to accepting service.

(E) (Reserved of Future Use)

(F) (Reserved of Future Use)

(G) (Reserved of Future Use)

(H) (Reserved of Future Use)

(I) Dedicated SONET Entrance Facilities
Cancellation Charges Which Apply After the Order Date

- Per Switched Access STS1 DSEF Termination	$1,000.00
- Per Special Access STS1 DSEF Termination	
Price Cap	$1,000.00
Price Band A	$1,000.00
Price Band B	$1,000.00
Price Band C	$1,000.00

3.2.7 Reserved for Future Use

3.2.8 FGD or BSA-D Maximum Per Trunk Cancellation Charge

Jurisdiction	Cancellation Charge
California	$402.75
Florida	394.32
Texas	550.46

© 2022 Frontier Communications Parent, Inc. All rights reserved..

3. ORDERING OPTIONS FOR FIA (Cont'd)

3.3 Access Service Requests For Services Provided By More Than One Telephone Company

(A) Switched or Special Access Services provided by more than one telephone company are services where one end of the Switched Transport or Special Transport facility is in the operating territory of one telephone company and the other end of the facility is in the operating territory of a different telephone company.

The ordering procedure for this service is in (1) and (2). The telephone company will notify the customer, identifying which ordering procedures will apply.

(1) Single Company Billing

The telephone company receiving the ASR from the customer will arrange to provide the service and bill the customer as in 2.7.2. The customer will place the ASR with the telephone company as follows:

(a) For Switched Access Services the customer will place the ASR with the telephone company in whose territory the following is located:

- FGA or BSA-A - dial tone office

When the preceding is not in the same telephone company's territory as the customer designated location (CDL), the customer must supply a copy of the ASR to the telephone company in whose territory the CDL is located.

(2) Meet Point Billing

Each telephone company will provide its portion of the Switched Transport or Special Transport service within its operating territory to the meet point with the other telephone company(s). The BP will be determined by the telephone companies involved in providing the FIA service and listed in the NECA Tariff FCC No. 4.

For all Switched Access Services and all Special Access Services the order will be placed with the telephone company as specified in the Multiple Exchange Carrier Ordering and Design (MECOD) Guidelines.

(B) When FGA or BSA-A is ordered in a Multicarrier Access Area, the customer must provide a copy of the order to the SEC. The SEC will bill as in 2.7.

© 2022 Frontier Communications Parent, Inc. All rights reserved..

FACILITIES FOR INTERSTATE ACCESS

4. RESERVED FOR FUTURE USE

© 2022 Frontier Communications Parent, Inc. All rights reserved..

5. SPECIAL ACCESS

5.1 General

Special Access provides a transmission path to connect CDLs* within a LATA** for Interstate Telecommunications. Special Access provided to a customer may be connected directly to customer facilities, through Telephone Company Hub Wire Centers where bridging or multiplexing functions are performed, or through a DS3 Premises Multiplexer at a CDL where multiplexing functions are performed, and/or may be connected to access facilities of another telephone company or companies in the joint provision of Special Access Service as well as may be connected to Switched Access as set forth in Section 4. Special Access Services may also be connected to a customer's transmission equipment and facilities using a DS1 or DS3 Cross Connect arrangement where the customer is provided Expanded Interconnection Service (EIS) as defined in Section 17. High Capacity SALs may also be connected to an in-service Telephone Company provided integrated optical service, provided that such connections are technically and operationally feasible, as determined by the Telephone Company.

The provision of Switched Access and Special Access in combination is normally for, but not limited to, the use of WATS or WATS type Access. When Special Access is connected to Switched Access, the terms, conditions and rates for the facilities between the end user's CDL and the WATS Serving Office are as set forth in this section of the tariff; the terms, conditions and rates for the facilities between the WATS Serving Office and the IC's CDL, as well as the switching functionalities (e.g., end user access codes, screening) are as set forth in Section 4 of this Guide.

Special Access can be provided in either analog or digital format. Analog formats are differentiated by spectrum and bandwidth. Digital formats are differentiated by bit rate. The specific types of Special Access (e.g., Voiceband, Digital Data Service) provided are described in 5.2 following.

* Telephone Company Centrex CO like switches are considered to be CDLs for the purposes of this Guide.

** DS1 and DS3 Special Access Services may be provided between the service areas shown under 5.2.7(H), where facilities and conditions permit.

© 2022 Frontier Communications Parent, Inc. All rights reserved..

5. SPECIAL ACCESS (Cont'd)

5.1 General (Cont'd)

5.1.1 Rate Elements

With the exception of Video Digital Transport Service, there are six basic rate elements which apply to Special Access Service:

Special Transport (described in 5.1.1(B) following)
Special Transport Termination (described in 5.1.1(G) following)
Special Access Line (described in 5.1.1(C) following)
Special Access Cross Connect (described in 5.1.1(D)following)
Supplemental Features (described in 5.4 following)
Multiplexing Arrangements (described in 5.5 following)

Additionally, rates and charges for Integrated Optical Service Riders may also apply to Special Access connected to Integrated Optical Service Riders as set forth in Section 24.1 following.

The following is a list of Telephone Company's Open Network Architecture (ONA) Special Access Basic Service Elements (BSEs) which provide a cross-reference to the generic ONA product names.

Generic Name	Telephone Company Name
Access to Clear Channel Transmission	Clear Channel Capability
Automatic Protection Switching	Automatic Protection Switching
Bridging	Bridging
Conditioning	Conditioning
Secondary Channel Capability	Digital Data Service - Secondary Channel
Multiplexing - Digital 2000	Multiplexing Arrangements

(A) Reserved for Future Use

© 2022 Frontier Communications Parent, Inc. All rights reserved..

5. SPECIAL ACCESS (Cont'd)

5.1 General (Cont'd)

5.1.1 Rate Elements (Cont'd)

(B) Special Transport

(1) The Special Transport rate element provides for the transmission facilities between the serving wire centers associated with two CDLs, between a serving wire center associated with an end user's CDL and a WATS Serving Office, between a serving wire center associated with a CDL and a Telephone Company Hub Wire Center, between two Telephone Company Hub Wire Centers or between a serving wire center associated with a CDL and a serving wire center where connection to an advanced data service# occurs. Connection to Telephone Company provided DS1 or DS3 Special Transport within a serving wire center for customers with EIS will require a Special Access Cross Connect arrangement as described in 5.1.1(D).

The Special Transport element is distance sensitive, except for MetroLAN and DS3 Banded Special Transport, and varies with type of capability (i.e., analog or digital) and type of facility (e.g., Voiceband, Digital Data Service, etc.). Special Transport may be provided by more than one telephone company. The method of calculating applicable airline miles for rating purposes for Special Access is specified in 2.7 preceding.

MetroLAN Transport provides flat rate non-distance sensitive transport for DS1 bandwidth on fiber optic rings. The rate element associated with MetroLAN is a monthly recurring charge as set forth in 5.7.7(B). MetroLAN Transport is not a Qualifying Service or a discounted rate element under the National Discount Plan as set forth in Section 23.1 following.

DS3 Banded Special Transport (as set forth in Section 5.7.14(C) following) provides flat rate transport for certain DS3 bandwidth that is provided under the National Discount Plan. The flat rate transport applies per DS3 service in accordance with Section 23.1.6 following.

Advanced data services include Telephone Company provided frame relay services, switched multi-megabit services, Internet Protocol services, LAN Extension Services and ATM-cell relay services. Connections to advanced data services are provided by the Telephone Company where such connections are technically and operationally feasible, as determined by the Telephone Company.

© 2022 Frontier Communications Parent, Inc. All rights reserved..

5. SPECIAL ACCESS (Cont'd)

5.1 General (Cont'd)

5.1.1 Rate Elements (Cont'd)

(B) Special Transport (Cont'd)

(2) Special Transport may be used in conjunction with Switched Access* for the purpose of provisioning Originating Only, Terminating Only or Combined Originating/Terminating Access as set forth in 4.2.5(V). Special Transport employed in this manner provides the FIA for the closed end of the services between the wire center serving the end user's CDL where WATS Serving Office functions are not available and the WATS Serving Office.

When the necessary WATS Serving Office functions are not provided at the wire center which serves the end user's CDL, the Telephone Company will designate the wire center where the WATS Serving Office functions are available.

(C) Special Access Line (SAL)

(1) A Special Access Line provides the transmission facilities to a Customer Designated Location (CDL) or the facilities between a CDL and the serving wire center. This rate element varies by type of capability (i.e., analog or digital) and type of facility (e.g., Voiceband, Digital Data Service, etc.).

When a Voiceband Special Access service is ordered to be terminated at a customer's designated Interexchange Carrier's all-digital CDL which requires a minimum digital interface level of 1.544 Mbps, the Telephone Company will provide the required interface and assess the customer a Voiceband SAL, for the facility between the all-digital CDL and its serving wire center. All other appropriate charges apply in addition to the Voiceband SAL.

SAL rates for DS3 offerings vary with the level of capacity, number of services and whether the interface provided is electrical or optical.

Installation of E1/DS1/DS3 SALs is as set forth in 5.6.1(E)(3). The applicable rates are the nonrecurring charge and monthly rate set forth per E1/DS1/DS3 SAL installed.

* Special Transport for DS1 and DS3 Special Access, when used with Switched Access, is not available for arrangements between service areas listed under 5.2.7(H).

© 2022 Frontier Communications Parent, Inc. All rights reserved..

5. SPECIAL ACCESS (Cont'd)

5.1 General (Cont'd)

5.1.1 Rate Elements (Cont'd)

(C) Special Access Line (SAL) (Cont'd)

(1) (Cont'd)

The selection of a Terminating Option, as defined in 5.3, is required for terminating the network portion of a Special Access Line at a CDL. Terminating Options provide a clearly delineated interface which facilitates the design, isolation, and testing of the Special Access. For DS3 Special Access, the customer may specify either an electrical or optical interface as set forth in 3.1.1(F).

E1 service is provided only with an electrical interface, and is subject to the availability of suitable fiber optic facilities between the CDL and the serving wire center.

One Special Access Line charge applies per CDL at which the facility is terminated. This charge applies even if the facilities to the CDL do not transit a serving wire center; this charge also applies if the CDL and the serving wire center are co located in a Telephone Company building. Connection to Telephone Company provided DS1 or DS3 SALs within a serving wire center for customers with EIS will require a Special Access Cross Connect arrangement as described in 5.1.1(D). The Special Access Line charge used with a Switching Interface, as set forth in (2) below, is applicable only for the transmission facilities between the end user's CDL and the serving wire center of that location.

(2) A Special Access Line may be provided in conjunction with FGA, FGB, FGD, BSA-A, BSA-B, and BSA-D Switched Access Service for the purpose of Originating Only, Terminating Only or Combined Originating and Terminating Access as set forth in 4.2.1 and 4.2.2. A Switching Interface is required for the provision of this service as set forth in 4.2.5(V). The Special Access Line provides the closed end of the dedicated facilities between an end user's CDL and its serving wire center. This serving wire center may or may not be a WATS Serving Office. In those instances when the serving wire center is not a WATS Serving Office Special Transport is applicable as set forth in 5.1.1(B) to the nearest Telephone Company WATS Serving Office.

The Switched Access used in conjunction with the Special Access Line provides various standard switching functionalities and optional arrangements as set forth in Section 4.2.5(V).

© 2022 Frontier Communications Parent, Inc. All rights reserved..

5. SPECIAL ACCESS (Cont'd)

5.1 General (Cont'd)

5.1.1 Rate Elements (Cont'd)

(C) Special Access Line (SAL) (Cont'd)

(2) (Cont'd)

All Special Access Lines used with a Switching Interface are:

provided with dial pulse address signaling or Dual Tone Multifrequency (DTMF) address signaling and either loop start or ground start supervisory signaling. The type of signaling is the option of the customer.
available as either a two wire or four wire Voiceband Special Access Service (i.e., 300 3000 Hz bandwidth). Each transmission path is provided at the option of the customer with transmission specifications as described in Section 7000 of the GTE Technical Interface Reference Manual.

All rules and regulations pertaining to Special Access are applicable to Special Access Lines used with a Switching Interface. Rates and Charges are found in 5.7.5 for two wire and four wire Voiceband Special Access Lines.

A customer may also order high capacity facilities from an end user's CDL to a Telephone Company Hub for the purpose of originating or terminating Special Access Lines used with a Switching Interface. High capacity to voice multiplexing will be required at the Hub. The customer will be required to submit an ASR for the high capacity facility and voice multiplexing. The customer will also be required to submit an ASR(s) for the individual Voiceband SALs specifying the channel facility assignment (CFA) for each service. This Hub may or may not be a WATS Serving Office. In those instances when the Hub is not a WATS Serving Office, Voiceband Special Transport is applicable as set forth in 5.1.1(B), for each individual Special Access Line used with a Switching Interface to the Telephone Company designated WATS Serving Office.

© 2022 Frontier Communications Parent, Inc. All rights reserved..

5. SPECIAL ACCESS (Cont'd)

5.1 General (Cont'd)

5.1.1 Rate Elements (Cont'd)

(D) Special Access Cross Connect for EIS

The Special Access Cross Connect charge provides the communications path between Telephone Company provided DS0 (DDS operating at bandwidth), DS1 or DS3 Special Access Lines or Special Access Transport and a customer's transmission equipment and facilities where the customer is provided EIS as defined in Section 17. The Special Access Cross Connect charge may also provide the communications path between a customer's transmission equipment and facilities where the customer is provided EIS and EIS arrangements of another customer via Dedicated Transport Service as set forth in Section 18.1. The Special Access Cross Connect is available as DS0, DS1, or DS3 connections. The DS0 Cross Connect can accommodate 64Kbps DDS. The Cross Connect arrangement may be connected directly to Telephone Company provided 64Kbps DDS serviceor to a Telephone Company provided 64Kbps DDS or DS3 multiplexing arrangement located in a Telephone Company Hub. The Cross Connect charge applies per DS0 (64Kbps), DS1, or DS3 connection.

In addition to the Special Access Cross Connect arrangements described herein, Optical Facility Terminations are available as described in Section 18.2.

Rates for DS0, DS1, and DS3 Cross Connect arrangements listed in Section 5.10 and rates for Optical Facility Terminations listed in Section 18.2(E) will apply in addition to the other rates and charges as specified in Section 17.

(E) Supplemental Features

Supplemental Features may be added to a Special Access circuit to improve its quality or utility to meet specific communications requirements. These are not necessarily identifiable with specific facilities, but rather represent the end result in terms of performance characteristics which may be obtained. These characteristics may be obtained by using various combinations of facilities. Although the facilities necessary to perform a specified function may be installed at various locations along the path of the Special Access circuit, including the CDL, it will be provided for as a single rate element.

Examples of Supplemental Features that are available include, but are not limited to, bridging and conditioning. Each Supplemental Feature is described in 5.4, and rates are set forth in 5.7.

© 2022 Frontier Communications Parent, Inc. All rights reserved..

5. SPECIAL ACCESS (Cont'd)

5.1 General (Cont'd)

5.1.1 Rate Elements (Cont'd)

(F) Multiplexing Arrangements

Multiplexing provides for arrangements to convert a single higher capacity or bandwidth circuit for bulk transport to several lower capacity or bandwidth circuits. Multiplexing is available at a Telephone Company designated Hub Wire Center arranged for multiplexing, or at a CDL where multiplexing functions are performed using a DS3 Premises Multiplexer. All types of multiplexing may not be available at each Hub Wire Center. Refer to Section 5.6.6 for a description of Hub Wire Center. Descriptions for each type of multiplexing arrangements are provided in 5.5 following, and rates are set forth in 5.7 following.

(G) Special Transport Termination

(1) DS1, E1 and DS3 Service

The Special Transport Termination rate element as set forth in 5.7, applies only to DS1, E1, Individual DS3 and System DS3 offerings and is in addition to the Special Transport rate element. Special Transport Termination provides the equipment and arrangements necessary to terminate the Special Transport facility at a serving wire center. One Special Transport Termination charge applies for the termination of each end of a Special Transport facility for E1, DS1 and DS3 (Individual and Systems) offerings.

(2) Reserved for Future Use

© 2022 Frontier Communications Parent, Inc. All rights reserved..

5. SPECIAL ACCESS (Cont'd)

5.1 General (Cont'd)

5.1.2 Special Access Configurations

There are two types of facility configurations over which Special Access Services are provided – two-point and multipoint.

(A) Two point Service

A two point configuration is a circuit which is provided to connect two CDLs, either directly connected, through a Hub Wire Center where multiplexing functions are performed, or through a DS3 Premises Multiplexer where multiplexing functions are performed at a CDL. A two-point configuration also connects a CDL and a WATS Serving Office.

All Special Access offerings may be provided as a two point configuration.

With the exception of Temporary Videoband Service, applicable rate elements are:

Special Access Lines
Special Transport (when applicable)
Special Transport Termination (when applicable)
Supplemental Features (when applicable)
Multiplexing Arrangements (when applicable)

© 2022 Frontier Communications Parent, Inc. All rights reserved..

5. SPECIAL ACCESS (Cont'd)

5.1 General (Cont'd)

5.1.2 Special Access Configurations (Cont'd)

(A) Two point Service (Cont'd)

The following diagram depicts a typical two point service connecting two CDLs. The service is provided with the supplemental feature of Type C Conditioning:

```
CDL                    SWC                    SWC
                       CDL
M                      |    |                 |    |
M
:<———SAL———> └──┘ <———ST——> └──┘ <———SAL———
>:
:<————————————TYPE C
CONDITIONING————————————>:
```

SAL Special Access Line
ST Special Transport
SWC Serving Wire Center
CDL Customer Designated Location

Applicable rate elements are:
- Special Access Line (2 applicable)
- Special Transport (per airline mile between SWCs)
- Supplemental Feature of Type C Conditioning (2 applicable)

In addition, a Special Access Surcharge, as set forth in 5.6.9 following, and a Message Station Equipment Recovery Charge, as set forth in 5.6.10 following may be applicable.

© 2022 Frontier Communications Parent, Inc. All rights reserved..

5. SPECIAL ACCESS (Cont'd)

5.1 General (Cont'd)

5.1.2 Special Access Configurations (Cont'd)

(B) Multipoint Service

A multipoint configuration is a circuit that is provided to connect three or more CDLs through a Telephone Company Hub Wire Center.

Only Voiceband, Program Audio, Digital Data Service facilities, and Miscellaneous Services where so designated, will be provided as multipoint configurations. There is no limitation on the number of mid links, but the use of more than three mid links in tandem may degrade the quality of the multipoint facilities. A mid link is defined as the Special Transport facilities between Hub Wire Centers where the circuit is bridged and/or where circuit switching devices, such as loop transfer arrangement, are located.

Multipoint service is provided in the following manner:

(1) Special Access Line per CDL to their respective serving wire centers.

(2) Special Transport between serving wire centers associated with the CDLs and the Hub Wire Center.

(3) Special Transport between Hub Wire Centers.

(4) Supplemental Features: Bridging equipment for each bridging location and other Supplemental Features when applicable.

(5) (Reserved for Future Use)

(6) Multiplexing Arrangements when applicable.

© 2022 Frontier Communications Parent, Inc. All rights reserved..

5. SPECIAL ACCESS (Cont'd)

5.1 General (Cont'd)

5.1.2 Special Access Configurations (Cont'd)

(B) Multipoint Service

The following diagram depicts a multipoint service connecting four CDLs via two customer specified Hub Wire Centers:

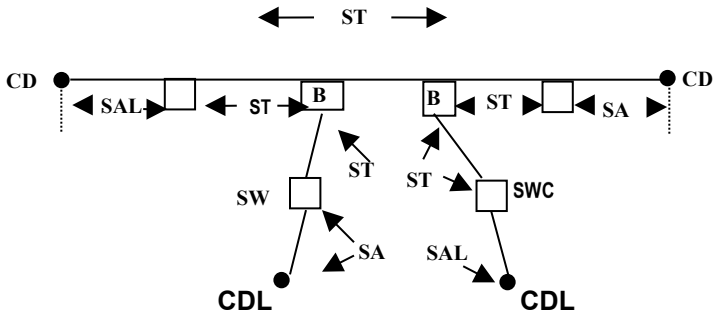

SAL - Special Access Line
ST - Special Transport
SWC - Serving Wire Center
CDL - Customer Designated Location
HWC - Hub Wire Center
B - Bridging

Applicable rate elements are:
Special Access Lines (4 applicable)
Special Transport (5 segments, per airline between SWCs and HWCs)
Bridging (6 applicable, one per bridge port)

In addition, the Special Access Surcharge, as set forth in 5.6.9 following, and the Message Station Equipment Recovery Charge, as set forth in 5.6.10 may be applicable.

© 2022 Frontier Communications Parent, Inc. All rights reserved..

5. SPECIAL ACCESS (Cont'd)

5.1 General (Cont'd)

5.1.3 Special Facilities Routing

A customer may request that the facilities used to provide Special Access Service be specially routed. The regulations, rates and charges for Special Facilities Routing (i.e., Avoidance, Diversity and Cable Only) are as set forth in Section 9 following.

5.1.4 Design Layout Report

The Telephone Company will provide to the customer the makeup of the Special Access provided under this Guide to aid the customer in designing its overall service. This information will be provided in the form of a Design Layout Report and will include the following:

Cable gauge, length and loading.
Makeup (e.g., T Carrier, two wire, four wire, etc.)
Specific pair of circuit assignment at the customer designated location.

The Design Layout Report will be provided to the customer within fourteen working days from the ASR Date. Updated reports will be reissued within fourteen working days whenever facilities provided to the customer are materially changed. Both the initial and updated Design Layout Reports will be provided to the customer at no charge.

© 2022 Frontier Communications Parent, Inc. All rights reserved..

5. SPECIAL ACCESS (Cont'd)

5.1 General (Cont'd)

5.1.5 Acceptance Testing

At the time of installation, the following test parameters apply:

(A) For Voiceband services, acceptance testing will include tests for loss, 3 tone slope, DC continuity, operational signaling, C notched noise, and C message noise.

When the Interface Arrangement provides a four wire voice transmission facility and the point of termination provides two wire voice transmission (i.e., there is a four wire to two wire conversion at the point of termination) balance tests are also included in acceptance testing. When performing installation and acceptance testing, the Telephone Company will test the access service within the LATA.

On four wire and effective four wire circuits where the Network Channel Terminating Equipment (NCTE) has the capability of being remotely aligned, the Telephone Company may perform acceptance testing without a Telephone Company technician at the customer's premise. Should the customer request a technician be present at the customer's premise, additional charges will apply as set forth in Section 6.2(C). The applicable rates are in Section 6.2(G).

If the NCTE at the customer's premise does not have the capability of being aligned remotely, the additional charges will not apply. The Telephone Company will determine the type of NCTE placed at a customer's premise.

(B) For other analog services (i.e., Program Audio, Video) and for digital services (i.e., Digital Data Services and High Capacity Digital Services), acceptance testing will include tests for the parameters applicable to the service as set forth in Section 7000 of the GTE Technical Interface Reference Manual for each of these services.

When the customer requests the performance of additional cooperative tests which are not required to meet these specified performance parameters, charges as set forth in 6.6 (B) following will apply. All test results will be made available to the customer upon request.

If acceptance tests are not started within 15 minutes after pre service tests have been completed and the customer has been notified by the Telephone Company, additional charges may apply, as set forth in 6.2 following, unless the delay is caused by the Telephone Company.

© 2022 Frontier Communications Parent, Inc. All rights reserved..

5. SPECIAL ACCESS (Cont'd)

5.1 General (Cont'd)

5.1.6 Ordering Conditions

Ordering conditions are set forth in detail in Section 3 preceding. Also included in that section, are other charges which may be associated with ordering Special Access (e.g., Service Date Change Charges, Cancellation Charges, etc.).

(A) Determination of Jurisdiction of Mixed Use Special Access Lines

When mixed interstate and intrastate Special Access Service is ordered, the jurisdiction will be determined as follows:

1. If the customer's estimate of the interstate traffic on the physically intrastate line involved constitutes 10% or less of the total traffic on that line, the line will be ordered and provided in accordance with the applicable rules and regulations of the appropriate intrastate tariff.

2. If the customer's estimate of the interstate traffic on the physically intrastate line involved constitutes more than 10% of the total traffic on that line, the line will be ordered and provided in accordance with the applicable rules and regulations of this Guide.

4. Lines in service on the effective date of this Guide certified to be jurisdictionally intrastate and having a maximum termination liability associated with them will not be assessed the termination liability. The customer must submit an ASR for each line changing jurisdiction no later than 90 days from the effective date of this Guide to have the termination liability waived.

(B) Special Access Jurisdictional Verification

If a billing dispute arises or a regulatory commission questions the customer's certification of the jurisdiction of the line the Telephone Company will ask the customer to provide the data used to determine the jurisdiction. The customer shall supply the data within 30 days of the Telephone Company's request. The customer shall keep records of system design and functions from which the jurisdiction can be ascertained and upon request of the Telephone Company make the records available for inspection as reasonably necessary for purposes of verification of the jurisdiction of the service

© 2022 Frontier Communications Parent, Inc. All rights reserved..

5. SPECIAL ACCESS (Cont'd)

5.2 Description of Special Access

There are five generic types of Special Access offerings. They are:

- Voiceband
- Program Audio
- Videoband
- High Capacity Digital
- Digital Data Service

Each type has its own characteristics, and are subdivided by one or more of the following:

- Transmission specifications
- Bandwidth
- Speed (i.e., bit rate)
- Spectrum

The Special Access offerings described below are comprised of a combination of the rate elements described in 5.1.1. The following descriptions indicate the most effective use for each facility. Customer use for purposes other than those indicated is limited only to the extent that such use must not harm the network. Further, the Telephone Company does not guarantee transmission performance beyond the parameters identified in the descriptions.

The transmission performance characteristics of each Special Access offering are stated in Section 7000 of the GTE Technical Interface Reference Manual. The Telephone Company will maintain existing transmission specifications on services installed prior to the effective date of this Guide, except that existing services with performance specifications exceeding the standards in the GTE Technical Interface Reference Manual will be maintained at the performance level specified in the manual. Where transmission performance characteristics are required other than those as stated in Section 7000 of the GTE Technical Interface Reference Manual, the Telephone Company will review, and where technically feasible, will develop rates and charges for the additional costs associated with provisioning the parameters. These rates and charges will be filed on an individual case basis in Section 5.9 and will apply in addition to all other applicable rates and charges.

© 2022 Frontier Communications Parent, Inc. All rights reserved..

5. SPECIAL ACCESS (Cont'd)

5.2 Description of Special Access (Cont'd)

The customer also has the option of ordering Voiceband and analog and digital high capacity facilities to a Telephone Company Hub for multiplexing to individual channels of a lower capacity or bandwidth. Descriptions of the types of multiplexing available at the Hubs, as well as the number of individual channels which may be derived from each type of facility, are set forth in 5.5. Additionally, the customer may specify supplemental features for the individual channels derived from the facility to further tailor the channel to meet specific communications requirements. Descriptions of the supplemental features available are set forth in 5.4.

For example, a customer may order a DS3 from a CDL to a Telephone Company Hub for multiplexing to 28 DS1 channels. The DS1 channels may be further multiplexed at the same or a different Hub to Voiceband channels or may be extended to other CDLs. Optional features may be added to either the DS1 or the Voiceband channels.

5.2.1 Voiceband

(A) Two Wire Voiceband Facility

These facilities are unconditioned and are capable of transmitting voice or data signals within the frequency spectrum of approximately 300 Hz to 3000 Hz. These facilities are furnished on a two point or multipoint basis and may be terminated two wire or four wire at the point of termination. They permit the simultaneous transmission of information in both directions over a circuit, but it is not possible to ensure independent information transmission in both directions. Supplemental features may be added, at applicable charges, to enhance the operational capabilities of these facilities.

(B) Four Wire Voiceband Facility

These facilities are unconditioned and are capable of transmitting voice or data signals within the frequency spectrum of approximately 300 Hz to 3000 Hz. The facilities are furnished on a two point or multipoint basis and may be terminated two wire or four wire at the point of termination. When terminated four wire, they permit simultaneous independent transmission of information in both directions over a circuit. However, when terminated two wire, simultaneous independent transmission cannot be supported. Supplemental features may be added, at applicable charges, to enhance the operational capabilities of these facilities.

5.2.2 Reserved for Future Use

© 2022 Frontier Communications Parent, Inc. All rights reserved..

5. SPECIAL ACCESS (Cont'd)

5.2 Description of Special Access (Cont'd)

5.2.3 Program Audio #

These facilities are arranged and provided for the transmission of audio to be broadcast or which is to be used in connection with loudspeakers, wired music, closed circuit or recordings. Audio facilities are furnished for transmission in one direction. Audio facilities may be provided on a two point or multipoint basis.

Program audio facilities are provided on either a full time or part time basis. The minimum periods for full time and part time service are set forth in Section 3.2.4. When a part time program audio service is provided for ten or more consecutive days, it will be treated as a full time service and rated accordingly. In no event will the charge for continuous part time program audio exceed the amount that would have been charged in the same time period for full time program audio facilities.

Effective January 22, 2014, orders for new Program Audio Service are no longer permitted. The Telephone Company will continue to provide Program Audio Service pursuant to this Section 5.2.3 on existing Program Audio Service in service as of January 22, 2014, or orders for Program Audio Service placed with the Telephone Company prior to January 22, 2014 (collectively, Existing Program Audio Service), subject to the following condition:

The Telephone Company will continue to provide Existing Program Audio Service until the earlier of the date that customer replaces the Existing Program Audio Service with a comparable Telephone Company-provided service, or the date that customer discontinues service, or the date that Telephone Company discontinues service. Moves, additions, and changes are not permitted.

© 2022 Frontier Communications Parent, Inc. All rights reserved..

5. SPECIAL ACCESS (Cont'd)

5.2 Description of Special Access (Cont'd)

5.2.3 Program Audio #

Listed below are the types of Program Audio facilities that are offered under this Guide.

(A) 200 to 3500 Hz

Facilities are generally acceptable for speech quality programming and are subject to use over limited distance due to transmission factors.

(B) 100 to 5000 Hz

Facilities are generally acceptable for music and provide good quality speech programming.

(C) 50 to 8000 Hz

Facilities for the provision of high fidelity music transmission.

(D) 50 to 15000 Hz

Facilities for the provision of high fidelity music transmission. Two such facilities may be conditioned, at applicable charges, for stereo operation.

Service availability limited. See # note on Page 5-18.

© 2022 Frontier Communications Parent, Inc. All rights reserved..

5. SPECIAL ACCESS (Cont'd)

5.2 Description of Special Access

5.2.4 Video Digital Transport Service

(A) General

Video Digital Transport facilities are arranged and provided for the transmission of television to be broadcast or used in connection with viewing, recording, managing or editing of moving pictures or video frames of information.

The Telephone Company will have no control over, nor be responsible for the video program signal generation or program content connected by the customer to the transmission path provided by the Telephone Company.

The Telephone Company will supply and maintain network interface equipment at the customer location as part of this offering. The customer will supply appropriate terminal equipment beyond the demarcation point which complies with the required specifications to interface with the Telephone Company's terminal interface. The Telephone Company is not responsible for the quality of the video signal originating or terminating in customer provided equipment.

There are two categories of Video Digital Transport Services: Type I (Temporary Facility) and Type II (Permanent Facility).

Video Digital Transport - Type I facilities are furnished for two point undirectional transmission or, when run through the Telephone Company's hub, multipoint unidirectional capabilities are available and Video Digital Transport - Type II facilities are furnished for two-point or multipoint undirectional or bidirectional transmission of United States 525 line/60 field standard monochrome and National Television Systems Committee (NTSC) color television baseband video signals and the associated audio signals.

© 2022 Frontier Communications Parent, Inc. All rights reserved..

5. SPECIAL ACCESS (Cont'd)

5.2 Description of Special Access (Cont'd)

5.2.4 Video Digital Transport Service (Cont'd)

(B) Video Digital Transport Services - Type I (Temporary Facility)

Video Digital Transport Services - Type I are provided on a full time or part time (temporary) basis. The minimum periods are set forth in 3.2.4 and 3.2.5 preceding. The monthly rates and nonrecurring charges for full time Video Digital Transport Service - Type I will be developed on an Individual Case Basis. The hourly rates and nonrecurring charges for temporary service are those set forth in Section 5.7.4(A).

There is a maximum monthly charge that may be assessed to any temporary Video Digital Transport Service - Type I, as described in Section 5.6.1(C).

Technician Standby is a nonoptional arrangement furnished only in conjunction with temporary Video Digital Transport Service - Type I. Technician Standby provides for Telephone Company monitoring of the temporary video broadcast to ensure satisfactory transmission. The Telephone Company will determine the location of the video technician. At the option of the customer, additional technicians will be made available during the temporary broadcast; the customer will be assessed the Technician Standby charge, as set forth in Section 5.7.4(A), for each additional technician.

A customer may request (as an option) an active, alternate temporary Type I Video Digital Transport transmission path for use in the event that the primary service becomes inoperative. This is referred to as a "hot standby" facility. The charge for this additional service will be the nonrecurring charges and hourly rates set forth in Section 5.7.4(A) for Temporary Video Digital Transport - Type I Facilities. Technician Standby charges are not applicable to the "hot standby" facility.

© 2022 Frontier Communications Parent, Inc. All rights reserved..

5. SPECIAL ACCESS (Cont'd)

5.2 Description of Special Access (Cont'd)

5.2.4 Video Digital Transport Service (Cont'd)

(C) Video Digital Transport Services - Type II

Video Digital Transport Service -Type II includes TV1-Analog, Up to 45 Mbps, and 270 Mbps# offerings.

Video Digital Transport Service - Type II/TV1-Analog is a video transport system for the transmission of broadcast quality video signals. These technical specifications are set forth below. Video Digital Transport Service - Type II is available to customers connected to the network via existing fiber optic or other compatible facilities. Customers requesting Video Digital Transport Service - Type II who are not served by compatible facilities may request the Telephone Company to provide such facilities in accordance with the Special Construction provisions set forth in Section 3.1.3 preceding.

Effective March 8, 2008, orders for new 270Mbps Bi-Directional Video Digital Transport Service – Type II subscribed to on a month-to-month arrangement, on a term commitment plan basis, or on a short duration - daily basis are no longer permitted. The Telephone Company will continue to provide 270 Mbps Bi-Directional Video Digital Transport Service – Type II pursuant to this Section 5 to customers currently subscribing to this service on a month-to-month arrangement or on a term commitment plan basis, or for any future order for 270 Mbps Bi-Directional Video Digital Transport Service – Type II subscribed to on a month-to-month arrangement or term commitment plan basis that is placed with the Telephone Company prior to March 8, 2008, (collectively, Existing 270 Mbps Bi-Directional Video Digital Transport Service – Type II) subject to the following conditions:

a. The Telephone Company will continue to provide Existing 270 Mbps Bi-Directional Video Digital Transport Service – Type II that is currently subscribed to a term commitment plan for an additional six (6) months beyond the expiration date of the customer's current term commitment plan, or until the customer replaces the Existing 270 Mbps Bi-Directional Video Digital Transport Service – Type II with a comparable Telephone Company provided service, or discontinues service, whichever comes first. Subject to availability of network facilities, moves, additions, and/or changes are permitted provided that such moves, additions and/or changes do not require a new term commitment plan or an extension to a term commitment plan.
b. The Telephone Company will continue to provide Existing 270 Mbps Bi-Directional Video Digital Transport Service – Type II that is currently subscribed to on a month-to-month basis until September 8, 2008, or until the customer replaces the Existing 270 Mbps Bi-Directional Video Digital Transport Service – Type II with a comparable Telephone Company provided service, or discontinues service, whichever comes first. Moves, additions, and/or changes are not permitted for customers subscribed on a month-to-month basis.

© 2022 Frontier Communications Parent, Inc. All rights reserved..

5. SPECIAL ACCESS (Cont'd)

5.2 Description of Special Access (Cont'd)

5.2.4 Video Digital Transport Service (Cont'd)

(C) Video Digital Transport Services - Type II (Cont'd)

The Telephone Company will provide technical support at its hub wire centers on a 24 hour, 7 days per week basis. This support will provide for the establishment, testing and termination of the facility transmission path from the customer location to the video carrier's location. The Telephone Company is authorized, on behalf of the customer, to take whatever action is appropriate to sustain a video transmission within the technical specifications.

TV1-Analog and 45 Mbps Video Digital Transport Services meet EIA/TIA 250-C specifications.

Refer to SMPTE 0259M-2008 for additional technical specifications associated with Video Digital Transport Type II - 270 Mbps.

270 Mbps Uni-Directional Video Digital Transport Services – Type II may be connected to a Telephone Company provided integrated optical service, where such connections are technically and operationally feasible, as determined by the Telephone Company. The 270 Mbps Uni-Directional Video Digital Transport Services – Type II DVL charge will not apply at the integrated optical service end of the circuit.

5.2.5 Reserved for Future Use

5.2.6 Reserved for Future Use

© 2022 Frontier Communications Parent, Inc. All rights reserved..

5. SPECIAL ACCESS (Cont'd)

5.2 Description of Special Access (Cont'd)

5.2.7 High Capacity Digital**

These facilities are two-point and are furnished between CDLs or between a CDL and a Telephone Company designated Hub Wire Center where multiplexing is offered. High Capacity facilities may be used to provide Special Access Lines as set forth in 5.1.1(C)(2). A High Capacity to Voice multiplexing arrangement, as described in Section 5.5, is required at the Hub Wire Center. High Capacity DS1 and DS3 services may also be connected to customer transmission equipment and facilities where the customer is provided EIS as defined in Section 17.

(A) DS1 facilities provide for the transmission of isochronous bipolar serial data at a rate of 1.544 Mbps.

(B) (Reserved for Future Use)

(C) (Reserved for Future Use)

(D) FiberConnect is provided on fiber optic cable with an electrical interface and provides the customer with four (4) transmission channels of 1.544 Mbps each at the interface. FiberConnect service provides for the transmission of an isochronous serial data stream at a rate of 1.544 Mbps per transmission channel.

FiberConnect is offered only on a one for one protected basis between a CDL and its serving wire center. FiberConnect is not available with multipoint services. Special Transport between serving wire centers for FiberConnect is ordered as four (4) DS1s.

FiberConnect facilities are only available as an Optional Payment Plan (OPP) in accordance with 5.6.12 following.

(E) DS3 facilities provide for the transmission of isochronous bipolar serial data at a rate of 44.736 Mbps. The Telephone Company will provide either an interface with Telephone Company electronics (electrical) or without Telephone Company electronics (optical) at the option of the customer. Ordering conditions are set forth in 3.1.1(F). EIS is not available with DS3 services provided with an optical interface.

** High Capacity DS1 and DS3 services may be provided between service areas shown under 5.2.7(H), where facilities and conditions permit.

© 2022 Frontier Communications Parent, Inc. All rights reserved..

5. SPECIAL ACCESS (Cont'd)

5.2 Description of Special Access (Cont'd)

5.2.7 High Capacity Digital** (Cont'd)

(F) (Reserved for Future Use)

(G) E1 facilities provide for the transmission of isochronous bipolar serial data at a rate of 2.048 Mbps. E1 facilities are only provided with an electrical interface.

(H) Interzone Service Areas

Interzone Service provides the transmission facilities for DS1 and DS3 Special Access and DS1 and DS3 Optical Networking Access Services between two service areas within a state in association with two customer designated locations within different service areas. Optical Networking Access Services are available from Section 20. The associates regulations, rates and charges from Section 20 shall apply, as applicable, in addition to the rates and charges associated with the DS1 and DS3 Special Access rate elements. Special Transport and Special Transport Termination will be applied as set forth under 5.1.1(B) and 5.1.1(G).

Interzone Service is only available between the following service areas, where facilities and conditions permit.

State	Location "A"	CLLI Code	Location "Z"	CLLI Code
California*	Ontario	ONTRCAXP	Palm Springs	PLSPCAXG
	Ontario	ONTRCAXG	Palm Springs	PLSPCAXG
	Ontario	ONTRCAXM	Palm Springs	PLSPCAXG
	Palm Desert	PLDSCAXF	Perris	PERSCAXF
	Palm Springs	PLSPCAXG	Redlands	RDLDCAXF
	San Bernardino	SNBRCAXK	Palm Springs	PLSPCAXG
	San Bernardino	SNBRCAXK	Indio	INDICAXG
	Santa Barbara	SNBBCAXF	Thousand Oaks	
	THOKCAXF			
	Walnut	WLNTCAXF	Pomona	
	POMNCAXF			

** High Capacity DS1 and DS3 services may be provided between service areas shown under 5.2.7(H), where facilities and conditions permit.

* Available for DS1 and DS3 Special Access Service only

© 2022 Frontier Communications Parent, Inc. All rights reserved..

5. SPECIAL ACCESS (Cont'd)

5.2 Description of Special Access (Cont'd)

5.2.8 DS1/DS3/FiberConnect Enhanced Access Diversity (EAD)

Where the appropriate facility routes and/or capacity exists, the Telephone Company will provide, at the option of the customer, the following types of Enhanced Access Diversity for DS1/DS3/FiberConnect service.

EAD will be provided utilizing existing routes and facilities in the configurations described and illustrated in (A), (B) or (C). Other diverse routing arrangements may be provided if suitable facilities are available under the terms and conditions of Special Facilities Routing of FIA in Section 9.

EAD will be provided at rates and charges for the DS1/DS3/FiberConnect as set forth in 5.7.17.

(A) Common Wire Center, Separate and/or Common Facilities Diversity

Diversity from one CDL serving wire center to a second CDL serving wire center. This type of diversity is for interoffice transport only.

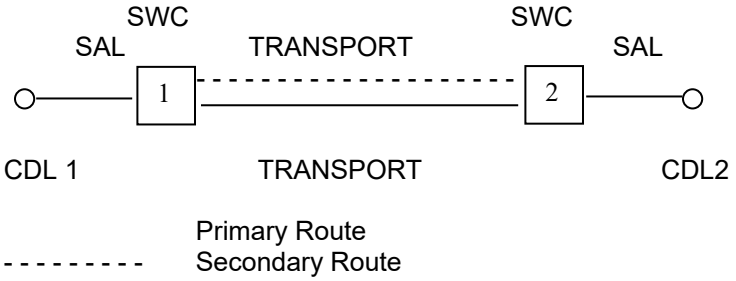

Two diverse circuits between serving wire centers. The SAL portion may be diverse if facilities are available.

© 2022 Frontier Communications Parent, Inc. All rights reserved..

5. SPECIAL ACCESS (Cont'd)

5.2 Description of Special Access (Cont'd)

5.2.8 DS1/DS3/FiberConnect Enhanced Access Diversity (EAD) (Cont'd)

(B) Common Wire Center, Separate Facilities Diversity

Diversity from one CDL to a second CDL using common serving wire centers, but on physically separate facilities. One circuit will be established between the CDLs and a second circuit will be established between the CDLs which may have common serving wire centers utilizing separate entrance facilities.

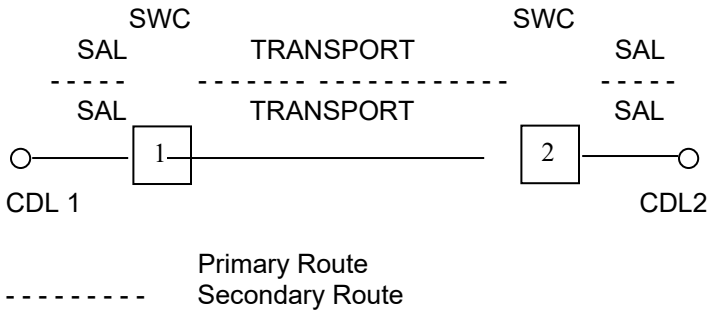

Two diverse circuits between serving wire centers. The SAL and Transport facilities must be separate, although the SWC's may be the same.

© 2022 Frontier Communications Parent, Inc. All rights reserved..

5. SPECIAL ACCESS (Cont'd)

5.2 Description of Special Access (Cont'd)

5.2.8 DS1/DS3/FiberConnect Enhanced Access Diversity (EAD) (Cont'd)

(C) Separate Serving Wire Center Diversity

Diversity between two CDLs with no common serving wire centers. One circuit will be established between the CDLs and a second physically separate circuit will be established between CDLs.

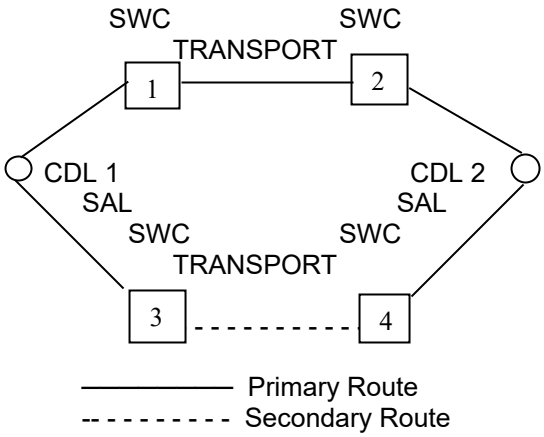

Two diverse circuits between serving wire centers. The SAL and Transport facilities must be entirely separate.

In the event that both the primary (standard route) and secondary (diverse route) service are simultaneously out of service for five or more minutes, the customer will be issued a credit allowance of $200.00 per service.* This credit allowance is in addition to the credit allowance in 2.8.1.1(A)(1). This credit allowance is in lieu of the credit allowance in 2.8.1.1(A)(3). The credit allowance will not apply if the failure occurs at a common serving wire center. The credit allowance will not exceed the monthly charge for the interrupted service.

A credit allowance will not be extended in accordance with conditions in 2.1.3(H) and 2.8.4(B) for the repair of Telephone Company owned facilities used to provide diverse routing.

© 2022 Frontier Communications Parent, Inc. All rights reserved..

5. SPECIAL ACCESS (Cont'd)

5.2 Description of Special Access (Cont'd)

5.2.8 DS1/DS3/FiberConnect Enhanced Access Diversity (EAD) (Cont'd)

(C) Separate Serving Wire Center Diversity (Cont'd)

The Telephone Company will provide the required routing information for each specially routed service to only the ordering customer. The customer may request this information when service is installed, prior to any subsequent changes in routing and on a recurring quarterly basis. Known diversity compromises will be included in the routing information report supplied to the customer.

When DS3 service is multiplexed, rates and charges will apply for each DS1 EAD service connecting to the multiplexer. Applicable rates and charges for the DS3 service will also apply if the customer orders EAD service for the DS3.

Rates for EAD appear in Section 5.7.17 and are in addition to all other rates and charges.

5.2.9 Digital Data Service

Facilities for Digital Data Service are furnished for the simultaneous two way transmission of synchronous data and are available at transmission speeds of: 2.4 Kbps, 4.8 Kbps, 9.6 Kbps, 19.2 Kbps, 56 Kbps or 64 Kbps. Digital Data facilities may be provided on a two point or multipoint basis.

© 2022 Frontier Communications Parent, Inc. All rights reserved..

5. SPECIAL ACCESS (Cont'd)

5.2 Description of Special Access (Cont'd)

5.2.10 Bonded Digital Link Service

(A) Service Description

Bonded Digital Link Service provides connecting channels for the transmission of voice or data between an end user's local exchange service terminating at a digital cross connect facility and special access service provided by the Telephone Company within the same wire center or at another wire center within the same LATA.

Bonded Digital Link Service is comprised of Intra-office channels (channels within a single wire center) or Inter-office channels (channels between two wire centers) connecting the wire centers of the locations involved. The minimum transmission rate for the service is 64 kbps in a DSO channel. The Telephone Company will provide for the transmission of DS0 channels within a DS1 signal of the customer's (the end user) associated local exchange service from the digital cross connect facility in the customer's serving wire center to a 64 kbps channel of a customer's DS1 to Digital central office multiplexing arrangement within the same wire center or in a different wire center. The total number of DS0s on a Bonded Digital Link Service channel may not exceed the total capacity of the DS1 or equivalent service to which it is connected.

At the customer's option, the Telephone Company will bond contiguous DS0 channels in order to provide higher data rates. The following data rates are available:

- 64 kbps; 1 DS0 equivalent channel
- 128 kbps; 2 DSO equivalent channel
- 256 kbps; 4 bonded equivalent DS0s
- 384kbps; 6 bonded equivalent DS0s
- 512 kbps; 8 bonded equivalent DS0s
- 768 kbps; 12 bonded equivalent DS0s

For the transmission of the Bonded Digital Link channels, the Telephone Company assumes responsibility for the routing of the customer's DS0 and bonded DS0 circuits over the Telephone Company's interoffice network in order to maximize network efficiencies and to optimize economic efficiencies.

© 2022 Frontier Communications Parent, Inc. All rights reserved..

5. SPECIAL ACCESS (Cont'd)

5.2 Description of Special Access (Cont'd)

5.2.10 Bonded Digital Link Service (Cont'd)

(B) Terms and Conditions

(1) Bonded Digital Link Service is available within or between wire centers where suitable digital cross-connect technology exists to perform DS1 to DS0 multiplexing functions. Those locations (wire centers) are set forth in NATIONAL EXCHANGE CARRIER ASSOCIATION, INC. TARIFF F.C.C. NO. 4.

(2) The service may only be used for connection from a wire center with a digital hubbing arrangement to a DS1 special access service capable of assignment to compatible DS0 channels. The customer or its authorized representatives must designate the DS0 channels on the special access service connected to this service. Data rates above 64 kbps require contiguous DS0 channel assignments. Connection to services other than special access service is prohibited.

(3) Bonded Digital Link Service is provided with a one-year minimum service period. If service is disconnected prior to satisfying the minimum service period (i.e., within the first twelve months), minimum period charges apply. The minimum one-year period and minimum period charges do not apply if the rates have increased during the one-year period. The minimum period charge is equal to 100 % of the monthly rate from the date of disconnection through the balance of the first twelve months of service.

(4) This service is used for connectivity within or between wire centers. The rates and charges for Bonded Digital Link Service apply as a flat rate per DS0 equivalent channel.

(5) Credit for an interruption of Bonded Digital Link Service is subject to the basic credit allowance set forth for Special Access services as set forth in Section 2.8.1.1 preceding.

(6) Bonded Digital Link Service is provided according to service date intervals as set forth in Section 3.2.1 preceding.

(7) The rates and charges for Bonded Digital Link Service apply per DS0 equivalent channel (64 kbps). The customer is assessed either an Intra-office or an Inter-office Channel Charge for each DS0. Rates and charges are set forth in 5.7.5.1 following.

© 2022 Frontier Communications Parent, Inc. All rights reserved..

5. SPECIAL ACCESS (Cont'd)

5.2 Description of Special Access (Cont'd)

5.2.11 Miscellaneous Special Access Services

A description of each service provided under Miscellaneous Special Access Services, along with the rates is set forth in 5.8 following. Other Special Access rate elements may apply in addition to those found in 5.8.

© 2022 Frontier Communications Parent, Inc. All rights reserved..

5. SPECIAL ACCESS (Cont'd)

5.3 Description of Terminating Options

5.3.1 Reserved for Future Use

5.3.2 Voice Grade

(A) Two Wire Voice Grade, Non Data, Without Signaling

This option provides a two wire interface to a customer and terminates an effective two wire facility furnished for voice transmission only. Customer provided signaling must be limited to tones in the voice band. Customer provided voiceband signaling equipment must limit transmission power to 0.0 dBm peak and 13 dBm average power over a three second period.

(B) Four Wire Voice Grade, Non Data, Without Signaling

This option provides a four wire interface to the customer terminal equipment and terminates an effective four wire facility furnished for voice transmission only. Customer provided signaling must be limited to tones in the voiceband. Customer provided voice band signaling equipment must limit transmission power to 0.0 dBm peak and 13 dBm average power over a three second period.

(C) Voice Grade Data Termination

This option provides a two wire or four wire transmission interface to a customer's private line data modem and terminates an effective four wire facility furnished for voiceband data transmission.

(D) Two Wire Voice Grade Station Connecting Facility Termination

This option provides a means to terminate an effective two wire facility or an effective four wire facility with a two wire customer interface on a telephone, key system, PBX, ACD, or similar equipment. This option is normally used to terminate facilities that furnish foreign central office service, the station end of PBX off premises service, or private switched service network access lines. The option provides both the transmission and loop signaling functions normally associated with these services. The option is also used to terminate facilities arranged with automatic ringdown signaling. This option provides the loop and ringdown signaling with the facility.

© 2022 Frontier Communications Parent, Inc. All rights reserved..

5. SPECIAL ACCESS (Cont'd)

5.3 Description of Terminating Options (Cont'd)

5.3.2 Voice Grade (Cont'd)

(E) Four Wire Voice Grade Station Connecting Facility Termination

A terminating option similar to (D) preceding used to terminate effective four wire foreign central office service. The option provides a four wire transmission interface to the customer terminal equipment and the loop signaling function normally associated with these services. This option provides the loop and ringdown signaling with the facility.

(F) Two Wire Station Connecting Facility Termination for the Open End of an Off Premises PBX Extension

Terminating options are available depending on the signaling range of the PBX (or similar system) as defined in Part 68 of the FCC Rules and Regulations. Type 1 is an option requiring range extension equipment at the CDL. Type 2 is an option with no range extension equipment at the CDL. If needed, the loop signaling range equipment for Type 1 must be specifically specified, see Section 5.4.4 following for available arrangements.

(G) Dial Repeating Tie Trunk Termination

Two network terminating options are provided for terminating effective four wire transmission facilities used to furnish dial repeating tie trunk services. These options are described in terms of the interface they provide to a PBX (or similar system).

(1) A Type I tie line termination provides the customer with a two wire transmission interface and includes either two wire or four wire E&M type signaling. Transmission and signaling interface options available are described in Part 68 of the FCC Rules and Regulations. This option provides the E&M type signaling with the facility.

(2) A Type III tie line termination provides the customer with a four wire transmission interface and includes either two wire or four wire E&M type signaling. Transmission and signaling options available are described in Part 68 of the FCC Rules and Regulations. This option provides the E&M signaling with the facility.

© 2022 Frontier Communications Parent, Inc. All rights reserved..

5. SPECIAL ACCESS (Cont'd)

5.3 Description of Terminating Options (Cont'd)

5.3.3 Program Audio #

(A) 200 to 3500 Hz

Provides standard program audio interface levels and impedance matching to two wire network facilities.

(B) 100 to 5000 Hz, 50 to 8000 Hz, and 50 to 15000 Hz

Provides standard program audio interface levels, circuit equalization and impedance matching to two wire network facilities.

5.3.4 Video Digital Transport Service

Video Digital Transport Service TV1-Analog and 45 Mbps service are provided via one signal (combined video and audio). They include a one way or two way transmission of standard 525 lines/60 fields monochrome or NTSC color video signal, and one or two associated 15 kHz audio signals. Additional audio channels are available.

Video Digital Transport Service 270 Mbps is provided via one noncompressed video signal complying with SMPTE259M. For 270 Mbps, audio is offered as an option in increments of two stereo channels.

5.3.5 Reserved for Future Use

Service availability limited. Refer to # footnote on Page 5-22.

© 2022 Frontier Communications Parent, Inc. All rights reserved..

5. SPECIAL ACCESS (Cont'd)

5.3 Description of Terminating Options (Cont'd)

5.3.6 High Capacity Digital

(A) High Capacity Digital DS1*

Provides a High Capacity Digital DS1 Special Access interface for use in providing simultaneous two way transmission of isochronous bipolar serial data signals at the rate of 1.544 Mbps.

(B) Reserved for Future Use

(C) Reserved for Future Use

(D) FiberConnect Service

Provides a High Capacity Digital Special Access interface for use in providing simultaneous two way transmission of isochronous bipolar serial data. The Telephone Company will provide an electrical interface. The electrical interface provides four (4) electrical channels at 1.544 Mbps each. Service will be provided on a one for one protected basis only.

(E) High Capacity Digital DS3*

Provides a High Capacity Digital DS3 Special Access interface for use in providing simultaneous two way transmission of isochronous bipolar serial data signals at the rate of 44.736 Mbps. The Telephone Company will provide either an interface with Telephone Company electronics (electrical) or an interface without Telephone Company electronics (optical) as specified by the customer. EIS is not available with DS3 services provided with an optical interface. Ordering conditions are set forth in 3.1.1(F).

(F) Reserved for Future Use

* High Capacity DS1 and DS3 services may be provided between service areas shown under 5.2.7(H), where facilities and conditions permit.

© 2022 Frontier Communications Parent, Inc. All rights reserved..

5. SPECIAL ACCESS (Cont'd)

5.3 Description of Terminating Options (Cont'd)

5.3.6 High Capacity Digital (Cont'd)

(G) High Capacity Digital E1

Provides a High Capacity Digital E1 Special Access interface for use in providing simultaneous two-way transmission of isochronous bipolar serial data signals at the rate of 2.048 Mbps and is only provided with an electrical interface. Before confirming the ASR for E1 service, the Telephone Company will verify the availability of fiber optic facilities at the CDL. Where suitable fiber optic facilities do not exist, customers may request the Telephone Company to provide such facilities in accordance with the Special Construction provisions set forth in Section 3.1.3 preceding.

5.3.7 Digital Data Service (DDS)

Provides DDS Special Access interface for use in providing simultaneous two way transmission of sequential bipolar data signals at transmission speeds of 2.4 Kbps, 4.8 Kbps, 9.6 Kbps, 19.2 Kbps, 56 Kbps or 64 Kbps.

© 2022 Frontier Communications Parent, Inc. All rights reserved..

5. SPECIAL ACCESS (Cont'd)

5.4 Description of Supplemental Features

Supplemental Features are items which can be added to a Special Access service to provide enhanced capabilities or improve its utility. References to specific uses or Special Access types indicate the most effective use for each Supplemental Feature. Customer use for other purposes or with other Special Access types is limited only to the extent that such use must not harm the network. Further, the Telephone Company does not guarantee functional operation of Supplemental Features for these alternate applications.

Listed below are the Supplemental Features that are offered under this Guide.

5.4.1 Bridging

Bridging is the function of connecting three or more CDLs in a multipoint arrangement. Listed below are those bridging services offered under this Guide.

(A) MultiPoint Data Bridging

This feature provides the capability to derive a multipoint data circuit from a single facility and is normally provided on Voiceband facilities provided for transmission of data signals. This function is provided on a per port basis. Polled multipoint data circuits are a typical application of this feature.

(B) Voice Conference Bridging

Bridging arrangement to connect multiple Voiceband facilities in order that a voice frequency input signal from any location will be reproduced at the output of all other circuit locations. This function is provided on a per port basis.

(C) Alarm Distribution Bridging

Provides polling type bridging capabilities, band splitting filters and conversion of four wire common terminations up to a capacity of 40 two wire terminations. This function is offered as two tariff elements. The first element provides all shelving and common equipment for a capacity of 40 two wire terminations. The second element provides a two wire port. One common equipment rate element will apply to accommodate up to 40 two wire terminations. One two wire port charge will apply to each two wire Special Access Line terminated in the bridge.

© 2022 Frontier Communications Parent, Inc. All rights reserved..

5. SPECIAL ACCESS (Cont'd)

5.4 Description of Supplemental Features (Cont'd)

5.4.1 Bridging (Cont'd)

(D) Program Audio Bridging #

An arrangement to provide multiple channel outputs from a single Program Audio or Voiceband facility. This arrangement is provided and rated on a per port basis.

(E) DDS Bridging

Provides for a multi junction unit (MJU) arrangement to bridge 2.4 kbps, 4.8 kbps, 9.6 kbps, 19.2 kbps, 56 or 64 kbps DDS facilities. Different speeds cannot be mixed on the same bridge. This function is provided on a per port basis.

5.4.2 Conditioning Arrangements Data

Data conditioning, when utilized in conjunction with effective four wire Voiceband transmission facilities, improves the characteristics of these facilities. These improved characteristics are not represented to apply to the entire end to end facility of the customer, but only to that portion of the facility provided by the Telephone Company.

There are three types of data conditioning: Type C, Type C Improved and Type DA. Type C and Type C Improved conditioning control attenuation distortion and envelope delay distortion. Type DA controls the signal to C notched noise ratio and intermodulation distortion. Type C and Type DA conditioning may be combined on the same circuit. Type C Improved and Type DA conditioning may be combined on the same circuit.

Data conditioning is charged for on a per Special Access line basis. The parameters listed for each type of data conditioning apply from two or more CDLs located within the Telephone Company serving area. Conditioning parameters apply to each end of a two point circuit. For multipoint circuits, the conditioning parameters apply from any CDL to either the point of interface at another CDL or the first Telephone Company bridging point depending on the circuit configuration. These parameters are not applicable to High Capacity points of interface, because there is no voice frequency test access point. In these instances the data conditioning parameters apply to the last telephone company voice frequency test access point before the High Capacity point of interface.

Service availability limited. Refer to # footnote on Page 5-22.

© 2022 Frontier Communications Parent, Inc. All rights reserved..

5. SPECIAL ACCESS (Cont'd)

5.4 Description of Supplemental Features (Cont'd)

5.4.2 Conditioning Arrangements Data (Cont'd)

(A) Type C

Type C conditioning of Voiceband facilities provides a facility with the following transmission parameters enhanced to meet the values specified for Type C conditioning in Section 7000 of the GTE Technical Interface Reference Manual in addition to the standard parameters for Voiceband circuits.

(1) Attenuation distortion with reference to 1004 Hz.

(2) Envelope delay distortion.

(B) Type C Improved

Type C Improved conditioning of Voiceband facilities provides a facility with the following transmission parameters enhanced to meet the values specified for Type C conditioning in Section 7000 of the GTE Technical Interface Reference Manual in addition to the standard parameters for Voiceband circuits.

(1) Improved attenuation distortion with reference to 1004 Hz.

(2) Improved envelope delay distortion.

The customer may choose to order Improved Attenuation Distortion or Improved Envelope Delay Distortion or both (USOC XCECM) configurations. The rates specified for Type C Improved conditioning, Section 5.7.2(B), will apply regardless of the configuration specified.

(C) Type DA

Type DA conditioning of Voiceband facilities provides a facility with the following transmission parameter enhanced to meet the values specified for Type DA conditioning in Section 7000 of the GTE Technical Interface Reference Manual in addition to the standard parameters for voiceband circuits.

(1) Signal to C notched noise ratio.
(2) Nonlinear signal to second order distortion.
(3) Nonlinear signal to third order distortion.

© 2022 Frontier Communications Parent, Inc. All rights reserved..

5. SPECIAL ACCESS (Cont'd)

5.4 Description of Supplemental Features (Cont'd)

5.4.3 Conditioning Program Audio #

(A) Stereo Conditioning

Provides the option of two radio program facilities which are identical in all transmission characteristics. Two Program Audio facilities are required to provide this Supplemental Feature. This feature is normally used only with Program Audio 50 to 15000 Hz facilities. Stereo Conditioning is charged on a per occurrence basis.

(B) Zero Loss

Conditioning of Program Audio facilities to provide zero loss at 1000 Hz test frequency. Zero Loss is charged on a per Special Access Line basis.

Service availability limited. Refer to # footnote on Page 5-22.

© 2022 Frontier Communications Parent, Inc. All rights reserved..

5. SPECIAL ACCESS (Cont'd)

5.4 Description of Supplemental Features (Cont'd)

5.4.4 Signaling Arrangements

Signaling arrangements, when furnished with Voiceband transmission facilities, enable the facilities to accommodate standard telecommunications signaling protocols. Signaling arrangements provide for the conversion of one signaling method to another signaling method and/or extension of a signaling method at customer and Telephone Company interfaces and enables the transmission facilities to accommodate signaling transmission. Signaling arrangements are available with Voiceband transmission facilities to enable transmission of requested signaling formats. The third and fourth protocol characters of the Network Channel Interface (NCI) and Secondary Network Channel Interface (SEC NCI) codes as indicated on the customer's order, reflect signaling activity. Typical protocol characters contained in the NCI or SEC NCI codes that designate signaling arrangements are: AB, AC, DS, DX, DY, EA, EB, EC, EX, GO, GS, LA, LB, LC, LO, LR, LS, NO, RV and SF.

The customer identified NCI and SEC NCI codes will be considered the customer's request for signaling. The Telephone Company will endeavor to provide the specific signaling protocols requested by the customer. In those cases where facilities and equipment are not available to meet the customer's specific requests, the Telephone Company will provide the customer acceptable alternate protocols. Sections 3300, 6000 and 7000 of the GTE Technical Interface Reference Manual provide detailed technical descriptions of the signaling protocols normally available with each service offering. To properly provision SF signaling, when associated signaling code, is DS (PCM), additional information of SF requirements (loop signaling type DX/E&M or ringdown) must accompany the customer's order.

Signaling arrangement charges apply whenever interfaces at the customer premises or at the customer's Telephone Company serving wire center require a signaling arrangement other than those provided with the Terminating Options in 5.3.2 preceding. Signaling Arrangements will be charged on a per SAL basis. Specifically, a signaling charge applies if the signaling protocol characters in the NCI and the SEC NCI fields are different and include one of the following codes: RV, EX, SF, DX, DY, DS, AB.

© 2022 Frontier Communications Parent, Inc. All rights reserved..

5. SPECIAL ACCESS (Cont'd)

5.4 Description of Supplemental Features (Cont'd)

5.4.4 Signaling Arrangements (Cont'd)

For the above conditions, one additional signaling charge applies for each additional leg of multipoint circuit. When a Multiplexing Arrangement is ordered that converts a single higher capacity or bandwidth circuit into several lower Voiceband circuits, the Voiceband Signaling Arrangements are provided as part of the Multiplexing Arrangement, and no additional Signaling Arrangement charges will apply.

A signaling charge applies in addition to any other applicable signaling charge when loop range extension equipment is required. The Telephone Company will obtain customer approval for signaling range extension equipment.

Listed below are the Signaling Arrangements offered under this Guide:

(A) Loop Signaling Range Extension An arrangement to extend the metallic resistance limitations of loop type signaling.

(B) Conversion of Loop or E&M Signaling to SF An arrangement to convert loop or E&M signaling to the single frequency signaling format. (USOC OSB)

(C) E&M to DX Signaling Conversion Conversion of E&M signaling to the DX signaling format.

(D) E&M to Loop Signaling Conversion Conversion of E&M signaling format to the loop type signaling.

(E) Loop or E&M to PCM Signaling Conversion of loop or E&M signaling to the digital (PCM) signaling format.

(F) Automatic Ringdown Signaling (ARD) A signaling arrangement on a two point Special Access which converts loop seizure at one end of the facility into ringing signal at the opposite end.

© 2022 Frontier Communications Parent, Inc. All rights reserved..

5. SPECIAL ACCESS (Cont'd)

5.4 Description of Supplemental Features (Cont'd)

5.4.5 Echo Control

(A) Echo Suppression

An arrangement provided at the customer's request to attenuate reflected speech energy on a four wire facility. This conditioning is generally required on circuits with long propagation delay. Echo suppression is charged on a per Special Access circuit basis. Echo suppression is an obsolete service offering and is applicable only to those circuits equipped with echo suppression prior to January 1, 1987. Any service rearrangements or order activity on the circuits equipped with echo suppression may require a change to echo canceller as described in 5.4.5(B) following.

(B) Echo Canceller

An arrangement provided at the customer's request to cancel reflected speech energy on a four-wire facility. This conditioning is generally required on circuits with long propagation delay. Echo canceller is charged on a per Special Access circuit basis.

5.4.6 Improved Return Loss

Improved Return Loss provides for increased echo return and singing return parameters of an effective two wire channel. This optional feature is available with certain Voiceband services at a two wire point of termination when the transmission interface is four wire at one CDL and two wire at the other CDL. Placement of Telephone Company equipment may be required at the customer's premises with the two wire point of termination.

Improved Return Loss rates and charges will apply on a per Special Access Line basis at the rates specified in 5.7.2(B) following. Technical parameters and the applicable Voiceband services are specified in Section 7000 of the GTE Technical Interface Reference Manual.

5.4.7 Voiceband Facility Switching Arrangement

An arrangement to provide switching between two Voiceband Special Access Services. This arrangement may require a Voiceband control circuit to control the switching arrangement at an additional charge.

© 2022 Frontier Communications Parent, Inc. All rights reserved..

5. SPECIAL ACCESS (Cont'd)

5.4 Description of Supplemental Features (Cont'd)

5.4.8 Automatic Protection Switch

Consists of special switching equipment placed at both ends of a duplicate DS1 facility (i.e., DS1, High Capacity Circuit) for automatic switching to the duplicate (standby) facility in the event the active facility is inoperative.

Duplicate facilities may terminate at a serving wire center, a CDL or both. The option provided under this Guide only includes the APS(s) located at a serving wire center(s). When the duplicate facility terminates at a CDL, the customer will be responsible for providing the associated APS and ensuring it is compatible with the Telephone Company provided switch if appropriate.

The duplicate facilities are not a part of this supplemental feature.

5.4.9 Improved Termination Option

Improved Termination provides for a fixed 600 ohm impedance, an increased range of transmission levels, and simplex reversal (when applicable) on an effective four wire channel. This optional feature is available with most Voiceband services with a four wire point of termination. Telephone Company equipment is required at the customer's premises where this option is ordered.

The Improved Termination option will be ordered and rates and charges, as set forth in 5.7.2(B) following, will apply on a per SAL basis. Technical parameters and the applicable Voiceband services are specified in Section 7000 of the GTE Technical Interface Reference Manual.

© 2022 Frontier Communications Parent, Inc. All rights reserved..

5. SPECIAL ACCESS (Cont'd)

5.4 Description of Supplemental Features (Cont'd)

5.4.10 Improved Equal Level Echo Path Loss Option ELEPL 2

This option provides improved echo control parameters for an effective two wire channel at a four wire point of termination. Placement of Telephone Company equipment may be required at the customer's premises with the two wire point of termination.

The term "Equal Level Echo Path Loss" (ELEPL) represents the measure of Echo Path Loss (EPL) at a four wire interface which is corrected by the difference between the send and receive Transmission Level Point (TLP), i.e., ELEPL = EPL TLP (send) + TLP (receive).

Improved ELEPL rates and charges will apply on a per SAL basis at the rates set forth in 5.7.2(B) following. Technical parameters are specified in Section 7000 of the GTE Technical Interface Reference Manual.

5.4.11 Digital Data Service Secondary Channel

This feature is offered on an optional basis to customers of Digital Data Service. It is a separate, slower speed digital channel that operates in parallel with the companion Digital Data Service primary channel. The secondary channel allows for remote control and testing of the network and peripheral devices without taking the network out of service and without lowering the speed of the primary Digital Data Service channel. This feature is not available with 19.2 Kbps or 64 Kbps Digital Data Service.

Rates and charges as set forth in 5.7.5(C) will apply on a per Digital Data Service SAL basis (each end of a two point circuit and all ends of a multi point circuit).

The provisioning of this option to existing Digital Data Service requires the discontinuance of the existing Digital Data Service and the establishment of new Digital Data Service for both ends of a two point circuit and all ends of a multi point circuit. The nonrecurring charges associated with the installation of Digital Data Service will apply.

© 2022 Frontier Communications Parent, Inc. All rights reserved..

5. SPECIAL ACCESS (Cont'd)

5.5 Description of Multiplexing Arrangements

Multiplexing Arrangements provide the function to convert a single higher capacity or bandwidth circuit for bulk transport to several lower capacity or bandwidth circuits. Cascading multiplexing occurs when a high capacity analog or digital channel is de multiplexed to provide channels with a lesser capacity and one of the lesser capacity channels is further de multiplexed. For example, a DS3 may be de multiplexed to twenty-eight (28) DS1 facilities and then the DS1 facilities may be further de multiplexed to twenty-four (24) Voiceband channels.

When cascading multiplexing is performed in the same or different Hub Wire Center, a charge for the additional multiplexing unit will also apply. When cascading multiplexing is performed at a different Hub Wire Center, Special Transport will also apply between the involved Hub Wire Centers.

Listed below are the multiplexing arrangements offered under this Guide.

(A) Reserved for Future Use

(B) Reserved for Future Use

(C) Reserved for Future Use

(D) DS1 to Voice

An arrangement that multiplexes twenty four voice grade circuits to a single DS1 digital circuit at a rate of 1.544 Mbps, or multiplexes a single DS1 digital circuit at a rate of 1.544 Mbps to twenty four voice grade circuits. If this DS1 terminates in a DDS hub, a channel(s) of the DS1 can be used to provide DDS; however, DDS service stops at the DS1 interface. Multiple channels may be required to provide individual Program Audio Channels.

Up to 16 channels of this DS1 can be used for Direct Digital Service (DDS like service) with the assurance that circuit performance parameters will be met. If more than 16 channels are used for DDS like service, the performance parameters for the DS1 and all circuits riding the DS1 will not be guaranteed.

FT1 can be used in conjunction with DS1 to Voice Multiplexing in groupings of N x 56 Kbps or N x 64 Kbps where N = 2, 4 or 6, to a single DS1 digital circuit at a rate of 1.544 Mbps.

© 2022 Frontier Communications Parent, Inc. All rights reserved..

5. SPECIAL ACCESS (Cont'd)

5.5 Description of Multiplexing Arrangements (Cont'd)

(E) Reserved for Future Use

(F) Reserved for Future Use

(G) DS3 to DS1 and/or E1

An arrangement that multiplexes, at a Hub Wire Center, twenty-eight DS1 digital circuits to a single DS3 digital circuit at a rate of 44.736 Mbps, or multiplexes a single DS3 digital circuit at a rate of 44.736 Mbps to twenty-eight DS1 digital circuits.

In addition, where E1 service is available, this arrangement is capable of multiplexing:

(1) twenty-one E1 digital circuits
(2) four DS1 and eighteen E1 digital circuits
(3) eight DS1 and fifteen E1 digital circuits
(4) twelve DS1 and twelve E1 digital circuits
(5) sixteen DS1 and nine E1 digital circuits
(6) twenty DS1 and six E1 digital circuits
(7) twenty-four DS1 and three E1 digital circuits

to a single DS3 digital circuit at a rate of 44.736 Mbps, or a single DS3 digital circuit at a rate of 44.736 Mbps to one of the combinations set forth in (1) through (7) above.

(H) Reserved for Future Use

(I) Reserved for Future Use

(J) Digital Data Carrier Multiplexer

An arrangement that multiplexes a single DS1 1.544 Mbps digital circuit to twenty three DSO digital ports for connection to either a subrate data multiplexer as described in 5.5(K) following or 56 Kbps digital circuits.

(K) Digital Data Subrate Multiplexer

Used with cascading multiplexing, the Digital Data Subrate Multiplexer is an arrangement that multiplexes the following quantities of subrate digital data circuits into a single DSO digital port: 1) twenty 2.4 Kbps, 2) ten 4.8 Kbps or 3) five 9.6 Kbps. In turn, the DSO digital port is then multiplexed to a single DS1 digital circuit using the Digital Data Carrier Multiplexer described in 5.5(J) preceding.

© 2022 Frontier Communications Parent, Inc. All rights reserved..

5. SPECIAL ACCESS (Cont'd)

5.5 Description of Multiplexing Arrangements (Cont'd)

(L) DS3 Premises Multiplexer

(a) At the option of the customer, a High Capacity Digital DS3 Service may be ordered with a DS3 to DS1 multiplexer located at a CDL (DS3 Premises Multiplexer). The DS3 Premises Multiplexer will be provided by the Telephone Company and will be located within the Telephone Company's communications facilities (i.e., within the Telephone Company's network) and on the Telephone Company's side of the Point of Termination as defined in Section 2.6 preceding. The DS3 Premises Multiplexer allows up to twenty-eight (28) DS1 circuits to be derived from the High Capacity Digital DS3 facility. The High Capacity Digital DS1 circuits derived from the DS3 Premises Multiplexer must terminate at the premises and will extend beyond the DS3 Premises Multiplexer to a Point of Termination (as defined in Section 2.6 preceding). The DS3 Premises Multiplexer is not available with High Capacity Digital DS3 Service provided with an optical interface. The Telephone Company will commence billing rate for the High Capacity Digital DS3 Service and DS3 Premises Multiplexer on the Service Date for the multiplexed DS3 facility. Individual High Capacity Digital DS1 circuits derived from the multiplexed High Capacity Digital DS3 facility may only be ordered and installed subsequent to the installation of the facility to the DS3 Premises Multiplexer.

(b) The DS3 Premises Multiplexer arrangement cannot be located at a Physical or Virtual EIS arrangement pursuant to Section 17 following.

(c) When a High Capacity Digital DS3 Service is multiplexed at a CDL, such configuration is not a Telephone Company Hub for purposes of administering the terms and conditions of this Guide.

(d) The DS3 Premises Multiplexer multiplexing arrangement may not be used on a High Capacity Digital DS3 Service that is derived from a higher capacity service at the same CDL (e.g., a High Capacity Digital DS3 Service that is derived at that premises from an OC12 level service or node).

(e) The rates and charges for the DS3 Premises Multiplexer multiplexing arrangement as set forth in Section 5.7.6 following apply in addition to the applicable DS3 SAL rates and charges at that same CDL. High Capacity Digital DS1 SAL rates and charges do not apply at the CDL where such High Capacity Digital DS1 circuits are derived from a DS3 Premises Multiplexer.

(f) A Message Station Equipment Recovery Charge as set forth in Section 5.6.10 following may also apply.

© 2022 Frontier Communications Parent, Inc. All rights reserved..

5. SPECIAL ACCESS (Cont'd)

5.6 Rate Regulations

This section contains specific regulations governing the rates and charges that apply for Special Access Service.

Competitive Counties and Non-Competitive Counties are defined in Section 2.6 and the wire centers within such counties are listed in Section 19.2. In wire centers within a Competitive County, monthly rates and nonrecurring charges for Special Access rate elements are arranged in price bands. The price band for each serving wire center within a Competitive County is specified in Section 19.2 following. (N)

For Interexchange Carrier Point of Presence Special Access lines, Special Transport and Optional Features and Functions, including Multiplexing Arrangements, Price Band rates and charges apply regardless of whether the county is Competitive or Non-Competitive. In cases where Special Transport crosses price bands, the charge for the higher numbered price band applies.

For End User Special Access Lines, the application of “Price Cap” or “Price Band” is dependent upon whether or not the serving wire center is located in a Competitive County. If the End User Special Access Line is in a Competitive County, Price Band rates and charges apply. If the End User Special Access Line is in a Non-Competitive County, Price Cap rates and charges apply. Any rate element that is not labeled as either Price Band or Price Cap will apply in both Competitive and Non-Competitive Counties. (N)

5.6.1 Types of Rates and Charges

There are five types of rates and charges. These are monthly rates, weekly rates, daily rates, time sensitive rates and nonrecurring charges. The rates and charges are described as follows:

(A) Monthly Rates

Monthly rates are recurring charges that apply each month or fraction thereof that a Special Access Service is provided. For billing purposes, each month is considered to have 30 days.

(B) Daily Rates

Daily rates are recurring charges that apply to each 24 hour period or fraction thereof that a part time Program Audio or Video Digital Transport Special Access Service is provided. When part time Program Audio service is provided for ten or more consecutive days it will be treated as a full time service and monthly rates will apply. In no event will the charges for continuous part time Program Audio or Video Digital Transport service exceed the amount that would be charged in the same billing time period for full time service.

© 2022 Frontier Communications Parent, Inc. All rights reserved..

5. SPECIAL ACCESS (Cont'd)

5.6 Rate Regulations (Cont'd)

5.6.1 Types of Rates and Charges (Cont'd)

(C) Weekly Rates (M)

Weekly rates are charges that apply to each seven day usage period that a Video Digital Transport Service is provided, as requested by the customer. In no event will these part-time charges for continuous weekly usage, within the billing period, exceed the monthly rate. (M)

(D) Time Sensitive Rates

Time sensitive rates are charges that are applied either on an hourly basis or on a fraction of an hour basis.

(1) Hourly Rates

Hourly rates are recurring charges that apply to each 60 minute period, or fraction thereof, that a part-time Video Digital Transport Special Access Service is provided. The billing period commences when the video circuit is available for the customer's use and ceases when the customer's use is discontinued. There is a maximum monthly charge that may be assessed to any Temporary Video Digital Transport - Type I Special Access Service. The maximum charge during any 30 day period will be that amount equal to 100 hours of use.

For Video Digital Transport Service - Type II 270 Mbps, an optional feature, Absolute Connect^{sm} - Codec Conversion is offered on an hourly basis. In no event will the charges for continuous hourly usage exceed the daily rate.

(2) Fractional Hour Rates

Fractional hour rates are recurring charges that are applied for increments of time less than a 60 minute period, and are associated with Video Digital Transport Service - Type II transmission. For Video Digital Transport - Up to 45 Mbps, these charges are applied for a minimum initial period of 5 minutes or fraction thereof. Thereafter, each continuous minute of connection over the initial 5 minutes is charged at the additional minute rate under Section 5.7.4(B)(1)(a). This incremental rate structure will be applied for continuous usage up to the point where the next charge level (daily rate) is lower than the charges calculated for the fractional hour usage. Where the daily rate is lower than the resulting incremental usage rates, the daily rate will be applied.

Certain material on this page formerly appeared on Page 5-50

© 2022 Frontier Communications Parent, Inc. All rights reserved..

5. SPECIAL ACCESS (Cont'd)

5.6 Rate Regulations (Cont'd)

5.6.1 Types of Rates and Charges (Cont'd)

(E) Zone Density Plan - Special Access

The Zone Density Rate Plan is a pricing unit for rating High Capacity Special Access DS1 and DS3 Services. The Zone Density Plan assigns every Serving Wire Center (SWC) to one of three zones. The Serving Wire Center, CLLI Codes and zones are listed in Section 19. Zone 1 SWCs have the (D)
highest density of services, Zone 2 SWCs have intermediate density of (D)
services and Zone 3 SWCs have the lowest density of services. Zone (D)
Density Plan rates become effective in a study area concurrent with the first operational Expanded Interconnection Service (EIS), as described in Section 17, in that study area.

The Zone Density Plan for Special Access is applicable only to DS1 (1.544 Mbps) and DS3 (44.736 Mbps) services.

(1) Zone Density rates are set forth in Sections:

5.7.6 - Multiplexing Arrangements
5.7.7 - High Capacity Digital DS1
5.7.10 - High Capacity Digital DS3 Three System
5.7.11 - High Capacity Digital DS3 Unlimited System
5.7.12 - High Capacity Digital DS3 Individual System
5.7.13 - High Capacity Digital DS3 Group System*
5.7.14 - High Capacity Digital DS3 Transport and DS3 Banded Transport
5.7.15 - DS3 Multiplexer Cross Connect Arrangement
5.7.18 - DS1 Term Volume Plan
5.8.5 - Clear Channel Capability

(2) Special Access Lines and Transport Terminations are rated according to the Zone of the SWC where they are located.

(3) Special Transport provisioned between SWCs in two different zones will be rated at the higher zone rate.

(4) Zone Density Plan for special access provided by more than one telephone company will be provided as set forth in Section 2.7.4(B).

© 2022 Frontier Communications Parent, Inc. All rights reserved..

5. SPECIAL ACCESS (Cont'd)

5.6 Rate Regulations (Cont'd)

5.6.1 Types of Rates and Charges (Cont'd)

(F) Nonrecurring Charges

Nonrecurring charges are one time charges that apply for specific work activity, (i.e., installation of service or change to an existing service). The types of nonrecurring charges that apply for Special Access Service are those listed below.

(1) Design Change Charge

The customer may request a design change to the service ordered. A design change is any change to a pending ASR for Special Access Service which requires engineering review. Design changes include such things as the addition or deletion of supplemental features or changes in the terminating options. Design changes do not include a change of IC CDL or end user premises when its serving wire center changes or Special Access service type (e.g., 2 wire to 4 wire Voiceband or Voiceband to Program Audio, etc.). Changes of this nature will require the issuance of a new ASR and the cancellation of the original ASR. The cancellation charges apply as set forth in 3.2.6 preceding.

The Telephone Company will review the requested change, notify the customer whether the change can be accommodated and specify if a new service date is required. If the customer authorizes the Telephone Company to proceed with the design change, a Design Change Charge will apply.

The Design Change Charge, as set forth in 5.7.1 following, will apply on a per ASR per occurrence basis, for each ASR requiring a design change.

If a change of service date is required, the Service Date Change Charge as set forth in Section 3 preceding will also apply.

© 2022 Frontier Communications Parent, Inc. All rights reserved..

5. SPECIAL ACCESS (Cont'd)

5.6 Rate Regulations (Cont'd)

5.6.1 Types of Rates and Charges (Cont'd)

(F) Nonrecurring Charges (Cont'd)

(2) Installation of Supplemental Features and Multiplexing Arrangements

Nonrecurring charges apply for the installation of some supplemental features and multiplexing arrangements available with Special Access service. The charge applies whether the feature or multiplexing arrangement is installed coincident with the initial installation of service or at any time subsequent to the installation of service.

For additions of supplemental features without an NRC, a charge equal to a SAL NRC will apply. Only one such charge per service, per order will apply.

(3) Installation of FiberConnect, DS3, E1 and DS1 Special Access Lines

(a) FiberConnect Service Optional Payment Plan (OPP)

Customers subscribing to the FiberConnect OPP, at rates set forth in 5.7.8 following, will be assessed a nonrecurring charge (NRC). The NRC applies to the termination of each FiberConnect OPP SAL (which consists of four (4) DS1 equivalent channels on a single fiber optic transmission system). The customer must indicate on the ASR the Network Channel Interface (NCI) code for electrical termination.

When the customer purchases a FiberConnect OPP in a point-to-point configuration (i.e., a 2-point, non-multiplexed configuration that connects two (2) CDLs), the SALs at each CDL must be FiberConnect OPP SALs.

The NRC for installation of a FiberConnect SAL, as set forth in 5.7.8(A) following, will apply to existing FiberConnect OPP customers for changes and other service rearrangements as set forth in 5.6.1(F)(6) following.

Where suitable fiber optical facilities are not available, customers may request the Telephone Company to provide such facilities in accordance with the Special Construction provisions in Section 3.1.3 preceding.

© 2022 Frontier Communications Parent, Inc. All rights reserved..

5. SPECIAL ACCESS (Cont'd)

5.6 Rate Regulations (Cont'd)

5.6.1 Types of Rates and Charges (Cont'd)

(F) Nonrecurring Charges (Cont'd)

(3) Installation of FiberConnect, DS3, E1 and DS1 Special Access Lines (Cont'd)

(b) Reserved for Future Use

(c) Reserved for Future Use

(d) DS3 Arrangements

There are two levels of charges for the installation of 3 System DS3 and Unlimited System DS3 SALs as set forth in 5.7.10 and 5.7.11. The "First System" charge is assessed for the first DS3 SAL ordered by a customer. When the same customer requests additional DS3 SALs, to be installed between the same locations, the "Additional System" charge will apply for each SAL ordered (maximum of two Additional System SALs in a 3 System DS3 and no maximum in an Unlimited System DS3).

For Individual DS3s, the charge for installation will apply at the same rate per DS3 SAL, and for Group System DS3s*, the charge applies per Group System* SAL.

(e) E1 Arrangements

Customers subscribing to E1 service will be assessed a nonrecurring charge and monthly rates as set forth in 5.7.19. Suitable fiber optic facilities must be available at the CDL with no physical change in the existing configuration at the CDL. If this condition is not met, the customer will be advised that the ASR will not be processed. The customer may then cancel the ASR without charge, or may request the Telephone Company to provide such facilities in accordance with the Special Construction provisions set forth in Section 3.1.3 preceding.

© 2022 Frontier Communications Parent, Inc. All rights reserved..

5. SPECIAL ACCESS (Cont'd)

5.6 Rate Regulations (Cont'd)

5.6.1 Types of Rates and Charges (Cont'd)

(F) Nonrecurring Charges (Cont'd)

(3) Installation of FiberConnect, DS3, E1 and DS1 Special Access Lines (Cont'd)

(f) DS1 Standard Arrangements

Customers subscribing to DS1 Standard Arrangements, at rates set forth in 5.7.7(A) following, will be assessed a nonrecurring charge. The NRC for DS1 Standard Arrangements will be assessed per SAL.

The regulations in Section 5.6.1(F)(6) following will apply to existing DS1 Standard Arrangements customers when required for changes and other service arrangements.

(4) Installation of Video Digital Transport Service

(a) Temporary Video Digital Transport Service - Type I

There are two nonrecurring charges set forth in Section 5.7.4(A) for the installation of Temporary Video Digital Transport Service - Type I. One nonrecurring charge will be assessed when permanent in place facilities are used to provide the service, and a different nonrecurring charge will be assessed when nonpermanent portable facilities are used to provide the service.

If the customer orders Temporary Video Digital Transport Service - Type I with broadcast intervals of 5 nonconsecutive days or less within a 7 day period, the Telephone Company may, if facilities are available, leave the facilities in place, in which case the associated installation nonrecurring charges would not apply.

(b) Video Digital Transport Service - Type II

Initially, an ASR is required from the customer to establish an account for Video Digital Transport Service - Type II, prior to a request for video connection. Once the account has been established, the customer may request video connection where facilities are available, by using their remote terminal or contacting the Telephone Company's Video Transport Contact Center. The customer will input or provide the originating and terminating location(s) for the video connection and the expected duration of the transmission.

© 2022 Frontier Communications Parent, Inc. All rights reserved..

5. SPECIAL ACCESS (Cont'd)

5.6 Rate Regulations (Cont'd)

5.6.1 Types of Rates and Charges (Cont'd)

(F) Nonrecurring Charges (Cont'd)

(5) Installation of Voicegrade, Program Audio # and Digital Data Service Special Access Lines

The nonrecurring charge associated with the installation of voicegrade SALs is specified in 5.7.2(A). The nonrecurring charge associated with the installation of program audio SALs is specified in 5.7.3(A) through (D). This charge will not apply to part-time Program Audio SALs which are left in place and reused.

The nonrecurring charge associated with the installation of DDS SAL facilities and the provisioning of the customer specified transmission speed of 2.4, 4.8, 9.6, 19.2, 56 or 64 Kbps is specified in Section 5.7.5(A).

(6) Service Rearrangements

Service rearrangements are changes to existing (installed) services which may be administrative only in nature or involve an actual physical change to the service. Changes to pending orders are in 3.2.2.

Changes in the type of service will be treated as a discontinuance of the service and an installation of a new service.

Changes from a point-to-point High Capacity Digital DS3 Service to a point-to-point High Capacity Digital DS3 Service provided with the DS3 Premises Multiplexer multiplexing arrangement, as set forth in Section 5.5(L) preceding, are treated as a discontinuance of the service and an installation of a new service.

Changes from a High Capacity Digital DS3 Service multiplexed at a Telephone Company Hub to a point-to-point High Capacity Digital DS3 Service provided with the DS3 Premises Multiplexer multiplexing arrangement, as set forth in Section 5.5(L) preceding, are treated as a discontinuance of the service and an installation of a new service.

Service availability limited. Refer to # footnote on Page 5-22.

© 2022 Frontier Communications Parent, Inc. All rights reserved..

5. SPECIAL ACCESS (Cont'd)

5.6 Rate Regulations (Cont'd)

5.6.1 Types of Rates and Charges (Cont'd)

(F) Nonrecurring Charges (Cont'd)

(6) Service Rearrangements (Cont'd)

Changes involving the retermination of a Special Access High Capacity Digital DS1 Service from a circuit assignment on a DS3 to DS1 multiplexing arrangement at a Telephone Company Hub to a circuit assignment on a DS3 Premises Multiplexer, as set forth in Section 5.5(L) preceding, are treated as a discontinuance of the service and an installation of a new service.

Changes in the physical location of the point of termination are treated as moves which are described and charged for as in 5.6.4.

Administrative changes will be made without charge(s) to the customer.

Administrative changes are as follows:

- Change in name or ownership or transfer of responsibility from one customer to another, provided there is no interruption of use or relocation of Special Access service.
- Change of customer or customer's end user premises address when the change of address is not a result of a physical relocation of equipment,
- Change in billing data (name, address, or contact name or telephone number),
- Change of customer circuit identification,
- Change of billing account number,
- Change of customer test line number,
- Change of customer or customer's end user contact name or telephone number,
- Change of agency authorization, and
- Change in jurisdiction involving no physical changes to the service.

© 2022 Frontier Communications Parent, Inc. All rights reserved..

5. SPECIAL ACCESS (Cont'd)

5.6 Rate Regulations (Cont'd)

5.6.1 Types of Rates and Charges (Cont'd)

(F) Nonrecurring Charges (Cont'd)

(6) Service Rearrangements (Cont'd)

All other service rearrangements will be charged for as follows:

- If the change involves the addition of another termination to an existing two-point or multipoint service, installation charges for each location added will apply.

- If the change involves the addition of supplemental feature or multiplexing arrangement, the installation charge associated with the supplemental feature or multiplexing arrangement will apply. When the supplemental feature or arrangement has no associated nonrecurring charge (or rated at $.00), one SAL nonrecurring charge for the type of service involved (i.e., voicegrade SAL, DDS SAL, etc.) will be applied to the order.

- If the change involves only changing the type of network interface, with no change in facility, the installation charge associated with each service receiving a network interface change will apply.

- If the change involves changing a two wire service to a four wire service or vice versa, the installation charge for each location changed will apply.

- If the change involves only rollovers or grooming, then no charges will apply. A rollover is the retermination of a segment of a lower capacity special access service onto a higher capacity special access service. The rollover must occur in the wire center where the higher capacity service is multiplexed with no other changes to the lower capacity service being reterminated (i.e., the segment must not require rerouting to connect to the multiplexer of the higher capacity service).

  Grooming is the retermination of a lower capacity special access service from one channel in a higher capacity special access service to another channel in the same higher capacity service or to another channel in another higher capacity special access service (i.e., change in connecting facility assignment) in the same wire center, with no other changes to the lower capacity service.

© 2022 Frontier Communications Parent, Inc. All rights reserved..

5. SPECIAL ACCESS (Cont'd)

5.6 Rate Regulations (Cont'd)

5.6.1 Types of Rates and Charges (Cont'd)

(F) Nonrecurring Charges (Cont'd)

(6) Service Rearrangements (Cont'd)

ROLLOVER - EXAMPLE 1
Current Configuration

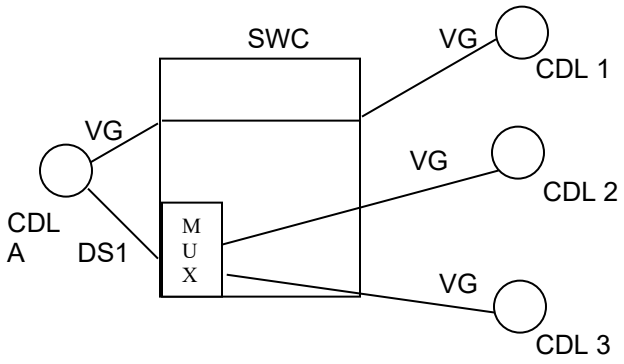

The customer requests that the voiceband circuit (VG) between CDL A and CDL 1 be “rolled over” to the DS1 servingCDL A. No NRCs apply for this request.

ROLLOVER - EXAMPLE 1
New Configuration

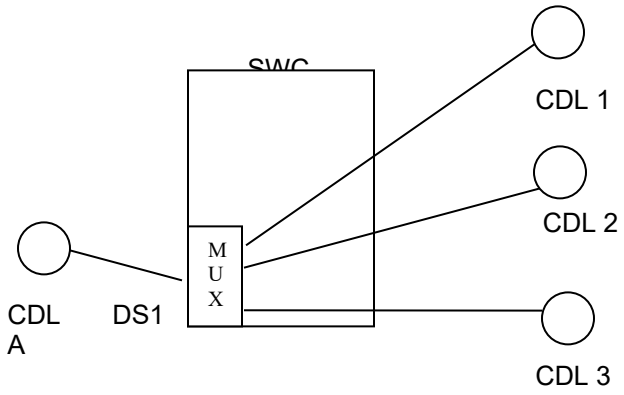

© 2022 Frontier Communications Parent, Inc. All rights reserved..

5. SPECIAL ACCESS (Cont'd)

5.6 Rate Regulations (Cont'd)

5.6.1 Types of Rates and Charges (Cont'd)

(F) Nonrecurring Charges (Cont'd)

(6) Service Rearrangements (Cont'd)

ROLLOVER - EXAMPLE 2
Current Configuration

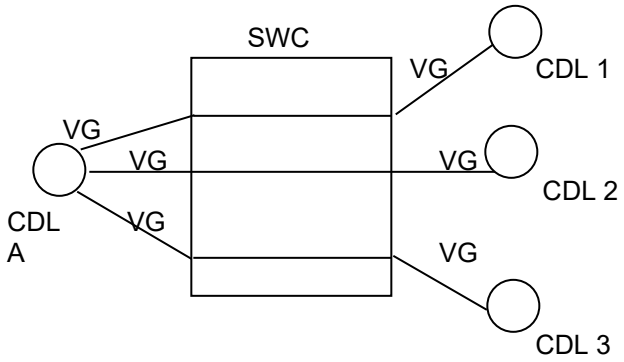

The customer requests the installation of a DS1 between the serving wire center (SWC) and CDL A and a DS1/voice multiplexer in the SWC. The customer also requests that the voiceband circuits serving CDLs 1, 2 and 3 be “rolled over” to the new DS1. All NRCs apply for the installation of the DS1 and multiplexer. No NRCs apply for the voiceband rollovers to the new high capacity circuit.

ROLLOVER - EXAMPLE 2
New Configuration

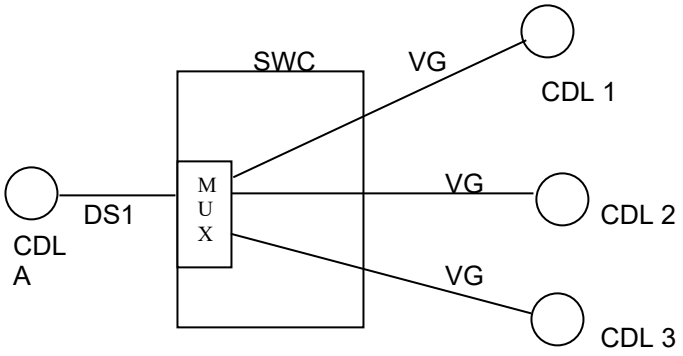

© 2022 Frontier Communications Parent, Inc. All rights reserved..

5. SPECIAL ACCESS (Cont'd)

5.6 Rate Regulations (Cont'd)

5.6.1 Types of Rates and Charges (Cont'd)

(F) Nonrecurring Charges (Cont'd)

(6) Service Rearrangements (Cont'd)

GROOMING - EXAMPLE 1
Current Configuration

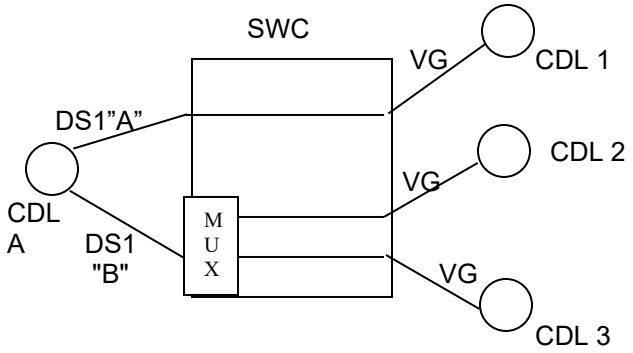

The customer requests that the voiceband (VG) circuit serving CDL 1 be moved from the DS1 "A" circuit to the DS1 "B" circuit. No NRCs apply for this request.

GROOMING - EXAMPLE 1
New Configuration

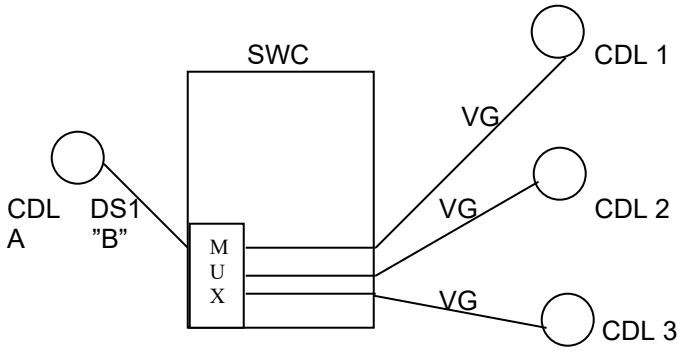

© 2022 Frontier Communications Parent, Inc. All rights reserved..

5. SPECIAL ACCESS (Cont'd)

5.6 Rate Regulations (Cont'd)

5.6.1 Types of Rates and Charges (Cont'd)

(F) Nonrecurring Charges (Cont'd)

(6) Service Rearrangements (Cont'd)

GROOMING - EXAMPLE 2
Current Configuration

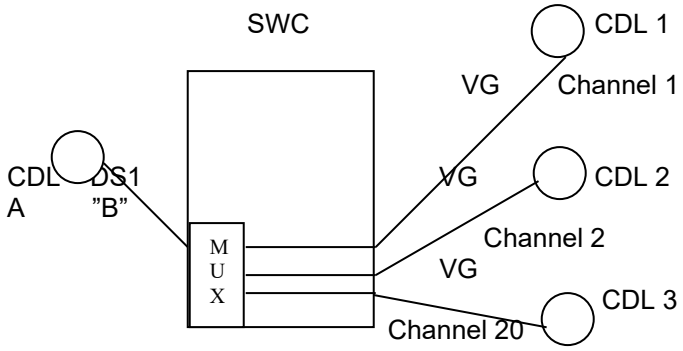

The customer requests that the voiceband circuit serving CDL 3 be moved from channel 20 in the DS1 serving CDL A to Channel 3 in the same DS1. No NRCs apply for this request.

GROOMING - EXAMPLE 2
New Configuration

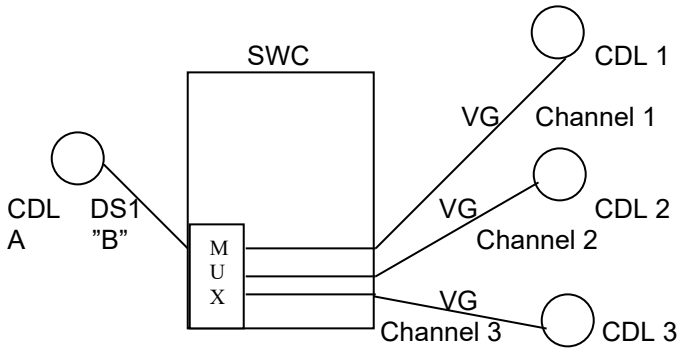

© 2022 Frontier Communications Parent, Inc. All rights reserved..

5. SPECIAL ACCESS (Cont'd)

5.6 Rate Regulations (Cont'd)

5.6.1 Types of Rates and Charges (Cont'd)

(F) Nonrecurring Charges (Cont'd)

(6) Service Rearrangements (Cont'd)

- If the change involves reterminations other than Rollovers and/or Grooming, all NRCs associated with the installation of the lower capacity service will apply.

- In cases where multiple service rearrangements or an additional termination or a move and a service rearrangement are requested on a single ASR, the total charge will never exceed the full nonrecurring charge for the basic service.

5.6.2 Minimum Periods

Special Access is provided for a specified minimum period. Minimum periods and minimum period charges are described in Section 3 preceding.

© 2022 Frontier Communications Parent, Inc. All rights reserved..

5. SPECIAL ACCESS (Cont'd)

5.6 Rate Regulations (Cont'd)

5.6.3 Mileage Measurement

The mileage to be used to determine the monthly rate for the Special Transport is calculated on the airline distance between the serving wire centers involved (i.e., CDL serving wire center or Hub Wire Center or WATS Serving Office). Where the calculated miles include a fraction, the value is always rounded up to the next full mile. Where the calculated value is zero, no Special Transport mileage is charged.

When there is a Hub Wire Center involved, the Special Transport mileage will be measured from the Hub Wire Center to the serving wire centers of each of the CDLs connected to the hubbed facilities. Mileage is computed for each section and rates are applied accordingly. However, when a Special Access facility is routed through a Hub Wire Center for purposes other than customer specified such as bridging or multiplexing (e.g. the Telephone Company chooses to so route for test access purposes), rates will be applied only to the distance calculated between the wire centers serving the CDLs.

The rates for the mileage are applied per airline mile. The serving wire center V&H coordinates and the method of calculation are specified in the NECA Tariff FCC No. 4.

5.6.4 Moves

A move involves a change in the physical location of the point of termination of Special Access. A move normally involves an interruption of Special Access for the period required to complete the move. No credit allowance will be granted for that period. Special Construction as set forth in Section 3.1.3 preceding may also be applicable at the different CDL.

A customer may request that Special Access not be interrupted during a move. To comply with that request, it may be necessary to install a duplicate Special Access, and subsequently discontinue the existing Special Access. Charges, monthly and nonrecurring, will apply for the duplicate Special Access. A new minimum period will be established for the duplicate portion of the Special Access, depending on which end of the Special Access is moved. The customer will remain responsible for all minimum period charges associated with the corresponding portion of the disconnected Special Access.

The charge for the move depends on whether the move is within the same CDL or to a different CDL.

© 2022 Frontier Communications Parent, Inc. All rights reserved..

5. SPECIAL ACCESS (Cont'd)

5.6 Rate Regulations (Cont'd)

5.6.4 Moves (Cont'd)

(A) Same CDL

When the move of a termination of FIA, as defined in Section 2.1.5, for special access is to a new point within the same CDL (same address and/or same building), the charge for the move will be the installation charge for the portion of the service being reterminated. There will be no change in the minimum period requirements. For services subject to payment plan regulations, the same payment period will remain in force.

(B) Different CDL

(1) When the move is to a different CDL (different address and different building), except as specified below, it will be treated as a disconnect and an installation of service. The appropriate service installation charge for the service termination(s) affected will apply. A new minimum period will be established for the installed Special Access Service. The customer will remain responsible for all minimum period charges associated with the disconnected Special Access Service. For services subject to payment plan regulations, a new payment plan will be established and full assessment of the remaining liabilities will be applicable.

(2) When the move is to a different CDL but served by the same serving wire center, the following conditions apply:

- A change ASR will be required.
- The appropriate service installation charge for the service termination(s) affected will apply.
- For Special Access services subject to payment plan regulations, if the customer of record remains the same with no lapse in service, the appropriate NRCs for changes will apply. Otherwise, the move will be treated as a disconnect and an installation of service and all appropriate NRCs and full assessment of the remaining liabilities will be applicable.

© 2022 Frontier Communications Parent, Inc. All rights reserved..

5. SPECIAL ACCESS (Cont'd)

5.6 Rate Regulations (Cont'd)

5.6.5 Rates and Charges on an Individual Case Basis

(A) The monthly rates and nonrecurring charges for the following service offerings will be developed on an Individual Case Basis:

- Full time Videoband - Type I Facilities

(B) The monthly rates and nonrecurring charges for the following Supplemental Features will be developed on an Individual Case Basis:

Dataphone Select a Station Bridging Common Equipment Addressable.

Dataphone Select a station Bridging Each Four Wire Port.

© 2022 Frontier Communications Parent, Inc. All rights reserved..

5. SPECIAL ACCESS (Cont'd)

5.6 Rate Regulations (Cont'd)

5.6.6 Hub Wire Centers

A Hub Wire Center is a Telephone Company designated serving wire center at which bridging or multiplexing arrangements are provided. Bridging is used to connect three or more CDLs in a multipoint arrangement. The multiplexing arrangements channelize analog or digital facilities to individual services requiring a lower capacity or bandwidth.

Although Hub Wire Centers are defined as serving wire centers at which bridging or multiplexing arrangements are performed, they are not limited to providing these functions and may provide any other types of Special Access services offered in this Guide. For example, the Telephone Company will designate certain Hub Wire Centers for Program Audio service offerings and the termination of Group System DS3* Special Transport.

The Telephone Company will designate the Hub Wire Center locations. Different locations may be designated as Hub Wire Centers for different functions, such as bridging or multiplexing arrangements, for different facility capacities (e.g., multiplexing from digital to digital may occur at one wire center while multiplexing from digital to analog may occur at a different wire center). The location of Hub Wire Centers and the types of hubbing functions offered at that location are identified in the NECA Tariff FCC No. 4.

Some of the types of multiplexing provided include the following:

- from higher to lower bit rate,
- from higher to lower bandwidth,
- from digital to voice grade service.

The transmission performance for the end to end Special Access provided from CDLs will be that of the lower capacity or bit rate. For example, when a DS1 Special Access is multiplexed to voice frequency circuits, the transmission performance will be Voiceband, not High Capacity.

The Telephone Company will commence billing the monthly rate for the Special Access Line and Special Transport or Special Access Cross Connect charge for EIS arrangements, for the High Capacity facility to the Hub Wire Center as of the service date, even though individual services utilizing those facilities may not be installed until a later date. If the customer has designated the type of multiplexing to be provided with the High Capacity facility, the nonrecurring charge for the Multiplexing Arrangement will be billed to the same customer at that same time, and the billing for the monthly rate will begin.

© 2022 Frontier Communications Parent, Inc. All rights reserved..

5. SPECIAL ACCESS (Cont'd)

5.6 Rate Regulations (Cont'd)

5.6.6 Hub Wire Centers (Cont'd)

Individual Special Access rates (by Special Access type) will apply for the Special Access Line and additional Special Transport facilities (if required) for each channelized Special Access. These will be billed to the customer specified on the ASR as each individual Special Access is installed. The appropriate application of rate elements is specified in 5.6.7(B). Shared use of a digital high capacity facility is provided for in 5.6.7(A).

A customer may order full time and/or part time Program Audio Services between two CDLs, or between a CDL and a Hub Wire Center, and will be billed accordingly at the rates set forth in Sections 5.7.3(A), 5.7.3(B), 5.7.3(C) and 5.7.3(D) following.

At the request of the customer, the full time and/or part time services provided to a Hub Wire Center may be connected together in the following configurations: full time to full time, full time to part time, or part time to part time.

The rates that apply for Program Audio Services between each CDL and the Hub Wire Center are Special Transport, if applicable, and Special Access Line. In addition, rates for Supplemental Features may be applicable.

© 2022 Frontier Communications Parent, Inc. All rights reserved..

5. SPECIAL ACCESS (Cont'd)

5.6 Rate Regulations (Cont'd)

5.6.7 Shared Use Analog and Digital High Capacity Services*

Shared Use refers to a rate application applicable only when the customer orders High Capacity Special Access facilities between a customer designated premises and a Telephone Company hub where the Telephone Company performs multiplexing/de-multiplexing functions and the same customer then orders the derived channels as Special and Switched Access Services. If the customer has Switched Access Service between a customer designated premises and an end office that is multiplexed at a Telephone Company hub and subsequently orders the derived channels as Special and Switched Access Service, rates and charges will apply as if the service were ordered as shared use. (T)

Shared use of Special Access Cross Connect and Expanded Interconnection service are not available.

Except as noted above, the High Capacity facility will be ordered, provided and rated as Special Access Service (i.e., Channel Termination, Channel Mileage, as appropriate, and Multiplexing Arrangement). The nonrecurring charge that applies when the shared use facility is installed will be the nonrecurring charge associated with the appropriate Special Access High Capacity Channel Termination. Rating as Special Access will continue until such time as the customer chooses to use a portion of the available capacity for Switched Access Service. Individual service (i.e., Switched or Special Access) nonrecurring charges will not apply to the individual channels of the shared use facility.

When Special Access Service is provided utilizing a channel of the shared use facility to a hub, High Capacity rates and charges will apply for the facility to the hub, as set forth preceding, and individual service rates and charges will apply from the hub to the customer designated premises. The rates and charges that will apply to the portion from the hub to the customer designated premises will be dependent on the specific type of Special Access Service that is provided. The applicable rates and charges will include a Channel Termination and Channel Mileage, if applicable. Rates and charges for optional features and functions associated with the service, if any, will apply for the appropriate channel type. (T)

* Shared Use Analog and Digital High Capacity Services are not available for arrangements between service areas listed under 5.2.7(H).

© 2022 Frontier Communications Parent, Inc. All rights reserved..

5. SPECIAL ACCESS (Cont'd)

5.6 Rate Regulations (Cont'd)

5.6.7 Shared Use Analog and Digital High Capacity Services* (Cont'd)

As each individual channel is activated for Switched Access Service, the High Capacity Special Access Channel Termination, Channel Mileage, and Multiplexing rates will be reduced accordingly (e.g., 1/24th for a DS1 service, etc.). Switched Access Service rates and charges, as set forth in FCC 14 Section 20 following, will apply for each channel that is used to provide a Switched Access Service. Additionally, the Switched Access Service Entrance Facility, Direct Trunked Transport, and Multiplexing charges, if applicable, will be reduced by multiplying their respective rates by the ratio of derived Switched Access Service channels to the total number of Voice Grade channels that can be derived. (T)

The customer must place an order for each individual Switched or Special Access Services utilizing the Shared Use Facilities and specify the channel assignment for each such service. (T)

* Shared Use Analog and Digital High Capacity Services are not available for arrangements between service areas listed under 5.2.7(H).

© 2022 Frontier Communications Parent, Inc. All rights reserved..

5. SPECIAL ACCESS (Cont'd)

5.6 Rate Regulations (Cont'd)

5.6.8 Video Digital Transport Services

(A) Type I

The rates and charges for use of facilities for Temporary Video Digital Transport - Type I Service are assessed on a per hop basis. A hop is defined as the transporting of a one way video and associated audio signal(s) in a direct path from a transmitter location to the adjacent receiver location. The distance of a single hop is primarily a factor of the local geographics of the video path, therefore, more than one hop may be required between CDLs. The following diagram depicts a single hop.

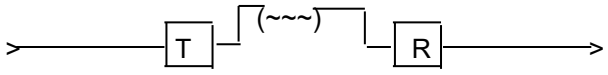

There are two separate rate categories for a hop which are based on the provisioning of service:

- Video broadcasts which use permanent facilities, and

- Video broadcasts which use nonpermanent facilities.

© 2022 Frontier Communications Parent, Inc. All rights reserved..

5. SPECIAL ACCESS (Cont'd)

5.6 Rate Regulations (Cont'd)

5.6.8 Video Digital Transport Services (Cont'd)

(A) Type I (Cont'd)

(1) Use of Permanent Facilities for Temporary Video Digital Transport Type I, Broadcast

Permanent facilities are those in place facilities that are not removed at the end of a broadcast.

The rates and charges for services provided over permanent facilities for Nonrecurring Charges, for Hourly Charges, and for Technician Standby, are set forth in Section 5.7.4(A). Nonrecurring Charges for Temporary Video Digital Transport Service - Type I are also described in Section 5.6.1(E)(4).

The Telephone Company does not contemplate constructing permanent facilities to provision future requests for temporary Type I Video Digital Transport service. However, in the event that a customer requests this type of provisioning in those states not designated as "NA", as set forth in 5.7.4 following, the Telephone Company will provide such facilities under Special Construction as set forth in Section 3.1.3 preceding. Accordingly, such facilities are deemed to be provided for the sole use of that customer and no other future use of those facilities is planned or expected by the Telephone Company.

© 2022 Frontier Communications Parent, Inc. All rights reserved..

5. SPECIAL ACCESS (Cont'd)

5.6 Rate Regulations (Cont'd)

5.6.8 Video Digital Transport Services (Cont'd)

(A) Type I (Cont'd)

(2) Use of Nonpermanent Facilities for Temporary Video Digital Transport Type I, Broadcast

Nonpermanent facilities consist of portable microwave equipment (e.g., transmitter, receiver, antenna, connecting cables and associated equipment) which is set up for the broadcast and subsequently removed after the broadcast.

The rates and charges for services provided over nonpermanent facilities for Nonrecurring Charges, for Hourly Charges, and for Technician Standby are set forth in Section 5.7.4(A) following. Nonrecurring Charges for Temporary Video Digital Transport Service - Type I are described in Section 5.6.1(E)(4).

Where multiple hops are required to provide the requested service, the rates and charges will apply to each hop set up for the broadcast. The Technician Standby charge will only apply to the time the Video Digital Transport Type 1 service is provided. The Technician Standby charge is not applied on a per hop basis.

(3) Use of Combined Facilities for Temporary Video Digital Transport Type I, Broadcast

Temporary Video Digital Transport Service may require the use of combined facilities to provide the requested service. Where permanent and nonpermanent facilities are used in tandem to provide a Video service, one half the nonrecurring charge will apply for the permanent facilities while the full nonrecurring charge will apply for the nonpermanent facilities. The hourly charge for both facilities will be applicable. The Technician Standby charge will only apply to the time the service is provided.

© 2022 Frontier Communications Parent, Inc. All rights reserved..

5. SPECIAL ACCESS (Cont'd)

5.6 Rate Regulations (Cont'd)

5.6.8 Video Digital Transport Services (Cont'd)

(A) Type I (Cont'd)

(4) Joint Provisioning of Service

Where more than one Telephone Company is involved in the provisioning of a Temporary Video Digital Transport Service - Type I, such jointly provided facilities are subject to the rules and regulations outlined in Sections 2.7 and 3.3. When the multiple bill option is employed as set forth in Section 2.7.3(B), the rates will apply as follows: When only nonpermanent facilities are used to provision the service and the service is jointly provided, the rates for the Video service will be one half the nonrecurring charge and one half the hourly charge. Where permanent facilities are used to provision the Video service and the service is jointly provided, the rates for the service are the entire nonrecurring charge and the entire hourly charge. Where a combination of permanent and nonpermanent facilities are used in the joint provisioning of the service, the rates for the Video service will be one half the nonrecurring charge for the permanent and nonpermanent facilities and one half the hourly charge for the nonpermanent facilities and the entire hourly charge for the permanent facilities.

The entire Technician Standby charge will be applied to the time the service is provided under a multiple bill option.

© 2022 Frontier Communications Parent, Inc. All rights reserved..

5. SPECIAL ACCESS (Cont'd)

5.6 Rate Regulations (Cont'd)

5.6.8 Video Digital Transport Services (Cont'd)

(B) Type II

(1) Rate Application

(a) Standard Arrangements

(1) Video Digital Transport - Up to 45 Mbps

The rates and charges for Video Digital Transport - Up to 45 Mbps are time sensitive and applied based on the duration of the video connection. Only one level of charge will apply to continuous usage, either minute sensitive, daily, weekly or monthly. In no event will the charge for continuous video usage exceed the rate for the next higher time frame level of usage.

For example, for two days of continuous usage, two times the daily rate would apply. For three days, the weekly rate is applicable since three times the daily rate exceeds the weekly rate.

The rates set forth under 5.7.4(B)(1)(a) apply for each segment between the customer location and the hub.

Video Digital Transport- Up to 45 Mbps is offered under a 1, 3 or 5 year plan at rates set forth under 5.7.4(B)(3)(a).

(2) Video Digital Transport - 270 Mbps #

(a) General

Video Digital Transport - 270 Mbps is offered as a switched configuration or a dedicated (non-switched) configuration. The switched configuration may be a point-to-point or multi-point arrangement that terminates on ports of the Telephone Company's video switch. The dedicated arrangement is a point-to-point service for the transmission of video without accessing the Telephone Company's video switch.

Service availability limited. Refer to # footnote on Page 5-22.

© 2022 Frontier Communications Parent, Inc. All rights reserved..

5. SPECIAL ACCESS (Cont'd)

5.6 Rate Regulations (Cont'd)

5.6.8 Video Digital Transport Services (Cont'd)

(B) Type II (Cont'd)

(1) Rate Application (Cont'd)

(a) Standard Arrangements (Cont'd)

(2) Video Digital Transport - 270 Mbps # (Cont'd)

(a) General (Cont'd)

Video Digital Transport - 270 Mbps is available under a month-to-month arrangement, term commitment plan of 1, 2, 3 or 5 years, or on a daily basis. The month-to-month offering requires a minimum service period of three months. In addition, with the exception of daily rates, for the switched configuration there are two volume tier levels used in determining applicable rates, 1-4 switched access line connections and 5 or more line connections between the same locations. When ordering additional connections, the customer must advise the Telephone Company of the number of existing connections at the location.

Video Digital Transport - 270 Mbps is provided via fiber optic or other compatible facilities. Where appropriate facilities are not available, Special Construction charges may apply as set forth in Section 3.1.3 preceding to provide such facilities required to meet the customer's request.

Service availability limited. Refer to # footnote on Page 5-22.

© 2022 Frontier Communications Parent, Inc. All rights reserved..

5. SPECIAL ACCESS (Cont'd)

5.6 Rate Regulations (Cont'd)

5.6.8 Video Digital Transport Services (Cont'd)

(B) Type II (Cont'd)

(1) Rate Application (Cont'd)

(a) Standard Arrangements (Cont'd)

(2) Video Digital Transport - 270 Mbps # (Cont'd)

(b) Rate Elements

The rate elements for Video Digital Transport - 270 Mbps are described as follows:

(1) Switched Video Access Line (SVAL)

The Switched Video Access Line (SVAL) provides for the Video Digital Transport - 270 Mbps line connection between the customer designated locations and its serving wire center. The SVAL includes the appropriate video-enabling equipment, circuit equipment, and outside plant facilities to access the customer's serving wire center. The standard SVAL arrangement defines the technical characteristics associated with the type of facilities with which the video service will interconnect and the type of signaling capability, if any. The SVAL includes any video encoding device that may be necessary to provide the service if any is required.

The SVAL is available on a unidirectional or bi-directional basis.

(2) Switched Video Port

The Switched Video Port is the rate element that provides for the connection of an SVAL to the Telephone Company's video network switch. The Switched Video Port rate is applied per SVAL on a unidirectional or bi-directional basis as determined by the directionality of the SVAL associated with the port.

Service availability limited. Refer to # footnote on Page 5-22.

© 2022 Frontier Communications Parent, Inc. All rights reserved..

5. SPECIAL ACCESS (Cont'd)

5.6 Rate Regulations (Cont'd)

5.6.8 Video Digital Transport Services (Cont'd)

(B) Type II (Cont'd)

(1) Rate Application (Cont'd)

(a) Standard Arrangements (Cont'd)

(2) Video Digital Transport - 270 Mbps # (Cont'd)

(b) Rate Elements (Cont'd)

(3) Dedicated Video Line

The Dedicated Video Line (DVL) provides for a non-switched Video Digital Transport - 270 Mbps line connection between the customer dedicated location and its serving wire center for the purpose of point-to-point video transmission without connecting to a Telephone Company video switch.

(4) Video Digital Transport - 270 Mbps Transport

The Video Digital Transport - 270 Mbps Transport rate element provides for the interoffice transmission facilities for service arrangements where the customer designated locations are not served by the same wire center and/or for switched video arrangements for interoffice transmission facilities between the serving wire center of the customer designated location and the video switch. Where a service is provided by more than one company, transport will be measured to the meet point as set forth under Section 3.3. Transport rates are applied under two rate elements, a per airline mile rate component and a fixed mileage component for each 20 miles of transport or fraction thereof.

Service availability limited. Refer to # footnote on Page 5-22.

© 2022 Frontier Communications Parent, Inc. All rights reserved..

5. SPECIAL ACCESS (Cont'd)

5.6 Rate Regulations (Cont'd)

5.6.8 Video Digital Transport Services (Cont'd)

(B) Type II (Cont'd)

(1) Rate Application (Cont'd)

(a) Standard Arrangements (Cont'd)

(2) Video Digital Transport - 270 Mbps # (Cont'd)

(b) Rate Elements (Cont'd)

(5) Optional Features - Video Digital Transport- 270 Mbps

(a) Audio

Audio channels are offered as an unbundled optional feature for Video Digital Transport - 270 Mbps, as not all 270 Mpbs video service arrangements require audio. Audio is provided in pairs of stereo channels.

(b) Alternate Switching - Manual

Alternate Switching-Manual provides the customer the ability to call the Video Transmission Center (VTC) and request a video technician to establish or switch up a connection to another location. This optional feature is available at the rate set forth under 5.7.4(B)(2)(b) and applies on a per switching event basis.

(c) Conversion Services

Conversion services are offered to handle compatibility requirements between the end points of a video circuit. There are two conversion options available, Format Conversion and Codec Conversion.

Service availability limited. Refer to # footnote on Page 5-22.

© 2022 Frontier Communications Parent, Inc. All rights reserved..

5. SPECIAL ACCESS (Cont'd)

5.6 Rate Regulations (Cont'd)

5.6.8 Video Digital Transport Services (Cont'd)

(B) Type II (Cont'd)

(1) Rate Application (Cont'd)

(a) Standard Arrangements (Cont'd)

(2) Video Digital Transport - 270 Mbps # (Cont'd)

(b) Rate Elements (Cont'd)

(5) Optional Features - Video Digital Transport- 270 Mbps (Cont'd)

(c) Conversion Services (Cont'd)

(1) Format Conversion provides for analog to digital, digital to analog, composite to component, component to composite, serial digital to composite, serial digital to component, composite to serial digital and component to serial digital conversions, as may be required.

(2) Codec Conversion provides codec compatibility between the end points of the video circuit.

(d) Interhub Arrangement

An interhub arrangement provides for the connection of a Video Digital Transport service between video hub wire centers or from a video hub wire center to a meet point.

Rates are applied per mile between the video hubs or from a hub to a meet point and per port for each hub connection.

Service availability limited. Refer to # footnote on Page 5-22.

© 2022 Frontier Communications Parent, Inc. All rights reserved..

5. SPECIAL ACCESS (Cont'd)

5.6 Rate Regulations (Cont'd)

5.6.8 Video Digital Transport Services (Cont'd)

(B) Type II (Cont'd)

(1) Rate Application (Cont'd)

(a) Standard Arrangements (Cont'd)

(3) Video Digital Transport - TV1-Analog

(a) General

Video Digital Transport - TV1-Analog is offered as a switched configuration or a dedicated (non-switched) configuration. The switched configuration may be a point-to-point or multi-point arrangement that terminates on ports of the Telephone Company's video switch. The dedicated arrangement is a point-to-point service for the transmission of video without accessing the Telephone Company's video switch.

Video Digital Transport - TV1-Analog is available under a month-to-month arrangement, term commitment plan of 1, 2, 3 or 5 years, or on a part-time basis. The month-to-month offering requires a minimum service period of three months.

Where appropriate facilities are not available, Special Construction charges may apply as set forth in Section 3.1.3 preceding to provide such facilities required to meet the customer's request.

© 2022 Frontier Communications Parent, Inc. All rights reserved..

5. SPECIAL ACCESS (Cont'd)

5.6 Rate Regulations (Cont'd)

5.6.8 Video Digital Transport Services (Cont'd)

(B) Type II (Cont'd)

(1) Rate Application (Cont'd)

(a) Standard Arrangements (Cont'd)

(3) Video Digital Transport - TV1-Analog (Cont'd)

(b) Rate Elements (Cont'd)

The rate elements for Video Digital Transport - TV1-Analog are described as follows:

(1) Switched Video Access Line (SVAL)

The Switched Video Access Line (SVAL) provides for the Video Digital Transport - TV1-Analog line connection between the customer designated locations and its serving wire center. The SVAL includes the appropriate video-enabling equipment, circuit equipment, and outside plant facilities to access the customer's serving wire center. The standard SVAL arrangement defines the technical characteristics associated with the type of facilities with which the video service will interconnect and the type of signaling capability, if any. The SVAL includes any video encoding device that may be necessary to provide the service if any is required.

The SVAL is available on a undirectional or bidirectional basis and is applied on a First and Additional (at same location) SVAL basis.

(2) Switched Video Port

The Switched Video Port is the rate element that provides for the connection of an SVAL to the Telephone Company's video network switch. The Switched Video Port rate is applied per SVAL on a First and Additional port basis as associated with a First or Additional SVAL.

© 2022 Frontier Communications Parent, Inc. All rights reserved..

5. SPECIAL ACCESS (Cont'd)

5.6 Rate Regulations (Cont'd)

5.6.8 Video Digital Transport Services (Cont'd)

(B) Type II (Cont'd)

(1) Rate Application (Cont'd)

(a) Standard Arrangements (Cont'd)

(3) Video Digital Transport - TV1-Analog (Cont'd)

(b) Rate Elements (Cont'd)

The rate elements for Video Digital Transport - TV1-Analog are described as follows:

(3) Dedicated Video Line

The Dedicated Video Line (DVL) provides for a non-switched Video Digital Transport - TV1-Analog line connection between the customer dedicated location and its serving wire center for the purpose of point-to-point video transmission without connecting to a Telephone Company video switch.

(4) Video Digital Transport - TV1-Analog Transport

The Video Digital Transport - TV1-Analog Transport rate element provides for the interoffice transmission facilities for service arrangements where the customer designated locations are not served by the same wire center and/or for switched video arrangements for interoffice transmission facilities between the serving wire center of the customer designated location and the video switch. Where a service is provided by more than one company, transport will be measured to the meet point as set forth under Section 3.3. Transport rates are applied under two rate elements, a per airline mile rate component and a fixed mileage component for each 20 miles of transport or fraction thereof.

© 2022 Frontier Communications Parent, Inc. All rights reserved..

5. SPECIAL ACCESS (Cont'd)

5.6 Rate Regulations (Cont'd)

5.6.8 Video Digital Transport Services (Cont'd)

(B) Type II (Cont'd)

(1) Rate Application (Cont'd)

(a) Standard Arrangements (Cont'd)

(3) Video Digital Transport - TV1-Analog (Cont'd)

(b) Rate Elements (Cont'd)

(5) Optional Features - Video Digital Transport - TV1-Analog

(a) Audio

One or two audio channels are provided with each TV1-Analog arrangement. Additional audio channels, up to two more, are available at the customer's option, at rates set forth under 5.7.4(B)(2)(b)(1).

(b) Alternate Switching – Manual

Alternate Switching-Manual provides the customer the ability to call the Video Transmission Center (VTC) and request a video technician to establish or switch up a connection to another location. This optional feature is available at the rate set forth under 5.7.4(B)(2)(b)(2) and applies on a per switching event basis.

© 2022 Frontier Communications Parent, Inc. All rights reserved..

5. SPECIAL ACCESS (Cont'd)

5.6 Rate Regulations (Cont'd)

5.6.8 Video Digital Transport Services (Cont'd)

(B) Type II (Cont'd)

(1) Rate Application (Cont'd)

(a) Standard Arrangements (Cont'd)

(3) Video Digital Transport - TV1-Analog (Cont'd)

(b) Rate Elements (Cont'd)

(5) Optional Features - Video Digital Transport - TV1-Analog (Cont'd)

(c) Conversion Services

Conversion services are offered to handle compatibility requirements between the end points of a video circuit. There are two conversion options available, Format Conversion and Codec Conversion.

(1) Format Conversion provides for analog to digital, digital to analog, composite to component, component to composite, serial digital to composite, serial digital to component, composite to serial digital and component to serial digital conversions, as may be required.

(2) Codec Conversion provides codec compatibility between the end points of the video circuit.

(d) Interhub Arrangement

An Interhub Arrangement provides for the connection of a Video Digital Transport service between video hub wire centers or from a video hub wire center to a meet point.

Rates are applied per mile between the video hubs or from a hub to a meet point and per port for each hub connection.

© 2022 Frontier Communications Parent, Inc. All rights reserved..

5. SPECIAL ACCESS (Cont'd)

5.6 Rate Regulations (Cont'd)

5.6.8 Video Digital Transport Services (Cont'd)

(B) Type II (Cont'd)

(1) Rate Application (Cont'd)

(b) Term Commitment Plan (TCP)

(1) General

Video Digital Transport Type II is available under a Term Commitment Plan (TCP).

Video Digital Transport - Up to 45 Mbps is offered under a 1, 3 or 5 year plan at rates set forth under 5.7.4(B)(3)(a). Video Digital Transport - 270 Mbps # and TV1-Analog are offered under a 1, 2, 3 or 5 year plan at rates set forth under 5.7.4(B)(3)(b).and (c), respectively.

(a) The customer must designate on the ASR the commitment term selected.

(b) Three year and five year rates will be equal to or less than the one year rates.

(c) Inside moves in accordance with 5.6.4 will not incur termination liability charges.

(d) Outside moves in accordance with 5.6.4(B)(2) will allow the customer to retain the same TCP period. Any other move will be treated as a disconnect of the service and termination liability charges will apply.

Service availability limited. Refer to # footnote on Page 5-22.

© 2022 Frontier Communications Parent, Inc. All rights reserved..

5. SPECIAL ACCESS (Cont'd)

5.6 Rate Regulations (Cont'd)

5.6.8 Video Digital Transport Services (Cont'd)

(B) Type II (Cont'd)

(1) Rate Application (Cont'd)

(b) Term Commitment Plan (TCP) (Cont'd)

(2) Change in Term Length

Prior to the completion of the selected TCP term, the customer may elect to convert to a new TCP of the same or different term length subject to the following:

- No term credit is applied for payments made under the original plan.

- If the new term selected is shorter than the time remaining under the existing TCP, the change to the new TCP constitutes a disconnect of the existing TCP and termination liability charges will apply.

(3) Renewal Options

(a) At the expiration of a TCP period, the Telephone Company will automatically renew the service at the same TCP period unless the customer chooses to convert to month-to-month or time sensitive billing, or discontinue service.

(b) Conversion to a different TCP period will require the customer to submit a change order ASR. Conversion to a different TCP period will be allowed without application of any nonrecurring or ordering charges.

(c) Conversion to standard arrangement rates (month-to-month or time sensitive) will be treated as a disconnect of service and establishment of new service. If no other changes are ordered, no NRCs will apply.

© 2022 Frontier Communications Parent, Inc. All rights reserved..

5. SPECIAL ACCESS (Cont'd)

5.6 Rate Regulations (Cont'd)

5.6.8 Video Digital Transport Services (Cont'd)

(B) Type II (Cont'd)

(1) Rate Application (Cont'd)

(b) Term Commitment Plan (TCP) (Cont'd)

(4) Notification of Discontinuance

An ASR for discontinuance of a TCP arrangement must be received by the Telephone Company at least thirty (30) business days prior to actual disconnect of service. Monthly charges will apply for a period of thirty (30) business days from (the date the Telephone Company receives disconnect notification or until the requested disconnect date if longer than thirty (30) business days. (C)

(5) Upgrade to a Digital Service

During a TCP period, customers may elect to upgrade from a Video Digital Transport Type II TV-1 Analog service to either a Video Digital Transport Type II Up-to-45Mbps or a Video Digital Transport Type II 270Mbps Unidirectional digital arrangement provided by the Telephone Company. Termination liability will be waived, subject to the upgrade meeting all of the following conditions:

- The upgraded service will be subject to all appropriate nonrecurring charges.
- The upgraded service remains connected at the same customer designated locations (CDL).
- The term length of the replacing digital arrangement is equal to or longer than the term length of the Video Digital Transport Type II TV-1 Analog service.

© 2024 Frontier Communications Parent, Inc. All rights reserved..

5. SPECIAL ACCESS (Cont'd)

5.6 Rate Regulations (Cont'd)

5.6.8 Video Digital Transport Services (Cont'd)

(B) Type II (Cont'd)

(1) Rate Application (Cont'd)

(b) Term Commitment Plan (TCP) (Cont'd)

(6) Termination Liability

When a TCP arrangement is discontinued prior to the end of the commitment period, termination liability charges, as set forth following, will apply based on the remainder of the TCP period in effect at the time of disconnect.

One Year TCP - 50% of any remaining portion of the first year's recurring charges.

Two Year TCP - 50% of any remaining portion of the first year's recurring charges. In addition, for any remaining portion of the second year, the customer will be liable for 10% of the total monthly recurring charges in that time period.

Three Year TCP - 50% of any remaining portion of the first year's recurring charges. In addition, for any remaining portion of the second and third years, the customer will be liable for 10% of the total monthly recurring charges in that time period.

Five Year TCP - 50% of any remaining portion of the first year's recurring charges. In addition, for any remaining portion of the second through fifth years, the customer will be liable for 20% of the total monthly recurring charges in that time period.

(7) Termination Without Liability

During a TCP period, should the currently effective rates for a customer's service increase, the customer may, at their option, terminate the TCP arrangement without penalty or liability.

During a TCP period, customers may upgrade analog service, subject to Section 5.6.8(B)(1)(b)(5) preceding, without termination liability.

© 2022 Frontier Communications Parent, Inc. All rights reserved..

5. SPECIAL ACCESS (Cont'd)

5.6 Rate Regulations (Cont'd)

5.6.8 Video Digital Transport Services (Cont'd)

(B) Type II (Cont'd)

(2) Shared Use of Videoband Service - Type II/Video Digital Transport

Multiple users may share a Videoband - Type II/Video Digital Transport connection from a specific customer site to a video carrier's location. The Telephone Company will bill the usage to the customer who requests the video connection.

(3) Availability of Videoband Service - Type II/Video Digital Transport

The Telephone Company does not guarantee the availability of access facilities to serve all customers for all possible simultaneous video connection requirements. Customer access will be provided on a first-come, first-serve basis.

(4) Use of Video Digital Transport - Type II Facilities for Other Than Video Transport

Type II facilities are designed for the express use of Type II video connections. Use of these facilities for transmission of other than video and the associated audio signals, by the customer, may result in interference or impairment of telephone company facilities and will be subject to the provisions in Section 2.2.2.

© 2022 Frontier Communications Parent, Inc. All rights reserved..

5. SPECIAL ACCESS (Cont'd)

5.6 Rate Regulations (Cont'd)

5.6.9 Special Access Surcharge

Pending the development of techniques to accurately measure usage of local facilities which are interconnected by users by means of interstate or foreign telecommunications, a surcharge of $25.00 per service per month will be assessed to a two point Special Access Service, and to each additional Special Access Line when the service is configured as multipoint. The Special Access Surcharge will also be assessed upon High Capacity Digital and FT1 Services on a voiceband equivalent basis. The voiceband equivalency for these type services is as follows:

- High Capacity DS1 equates to 24 Voiceband Facilities
- High Capacity FiberConnect equates to a maximum of 96 Voiceband Facilities
- High Capacity DS3 equates to 672 Voiceband Facilities
- Each 56 Kbps or 64 Kbps channel in a FT1 Service equates to one Voiceband Facility
- High Capacity E1 equates to 30 Voiceband Facilities

The Special Access Service will be exempted from the monthly surcharge if the customer provides the Telephone Company written certification that the termination is one of the following: (USOC S25EX)

(1) The open end termination (dial tone end) of a Foreign Central Office Line, Common Control Switching Arrangement (or equivalent) or Off Network Access Line (ONAL).

(2) Any termination of an analog circuit used for radio or television program transmission.

(3) Any termination of a line used for telex service.

(4) Any termination of a line by nature of its operating characteristics and nature of connection could not make use of common lines.

(5) Any line termination, other than (1) through (4) preceding, which is subject to the following charges: (a) Carrier Common Line, (b) End Office Switching, and (c) Switched Transport.

(6) A termination that the customer certifies to the Telephone Company is not connected to a PBX or other device capable of interconnecting the Special Access Service to the local network. If the PBX or other device has been configured either through software programming or physical restrictions not to access the local network, then the customer may file the surcharge exemption for the Special Access Service terminating on this equipment.

© 2022 Frontier Communications Parent, Inc. All rights reserved..

5. SPECIAL ACCESS (Cont'd)

5.6 Rate Regulations (Cont'd)

5.6.9 Special Access Surcharge (Cont'd)

In order for the Telephone Company to determine the application of the surcharge with respect to specific services, the customer must report the intended use of all services when placing ASRs for Special Access Service. In addition, when ordering High Capacity Analog or Digital services, the customer must report the use for each voice equivalent circuit of the high capacity service. When any circuit is reported wholly used in any manner described in (1) through (6) preceding, the surcharge will not apply. If the intended use is not reported, the surcharge will apply.

If, at any time after the installation of a service which is subject to the surcharge, the customer reports that the service is being used consistently with any exception listed above, the Telephone Company will credit the customer for the surcharge. Credit will not be given beyond the receipt date of the certification for exemption.

When the customer orders DS3 Premises Multiplexer as set forth in Section 5.5(L) preceding, the Special Access Surcharge will apply to the DS1s that are derived from the multiplexer unless written certification is provided in accordance with this Section 5.6.9.

5.6.10 Message Station Equipment Recovery Charge

Message Station Equipment Recovery Charge is a charge to recover that portion of message station equipment which is assigned to Special Access Service. Since there is zero cost assigned to Message Station Equipment Recovery in Special Access the charge is $.00.

© 2022 Frontier Communications Parent, Inc. All rights reserved..

FACILITIES FOR INTERSTATE ACCESS

5. SPECIAL ACCESS (Cont'd)

5.6 Rate Regulations (Cont'd)

5.6.11 DS3 High Capacity Service*

(A) DS3 Rate Structure

A DS3 (44.736Mbps) High Capacity SAL, whether an Individual, 3-System or Unlimited System, may be purchased with or without electronics. When a SAL is ordered with electronics the Telephone Company will place electronics at both the CDL and the serving wire center. When a SAL is ordered without electronics the Telephone Company will only place electronics at the serving wire center and not at the CDL. Effective May 18th 2002 when a DS3 SAL is ordered without electronics the interface must be optical unless an Additional SAL is added to an existing System with an electrical interface. When ordered with electronics the interface may be electrical or optical.

DS3 SALs are non-distance sensitive and are provided on a protected basis.

A Minimum Period charge applies to a DS3 (44.736Mbps) High Capacity SAL, whether an Individual, 3-System, Unlimited System or Group System. The minimum period for High Capacity DS3 Service is that period requested by the customer as set forth in Section 5.6.11 (B) following. The minimum period for a Month to Month Rated DS3 is 12 months. When a DS3 service is discontinued prior to the end of the minimum period, the customer will be liable for the total monthly charges for the remaining portion of the applicable minimum period. This charge will be based on the rates in effect at the time of disconnect. (N)

(N)

Individual System

An Individual System is a single DS3 between a CDL and the serving wire center. The appropriate NRC is applied per SAL.

Transport rate elements are applied per SAL when transport between offices is required. In instances when a SAL is ordered to a second CDL in conjunction with an Individual System SAL and Transport between offices is required Transport rate elements are applied per circuit.

3-System #

The 3-System allows the same customer, between the same CDL and the serving wire center, to order additional DS3 SALs, up to a maximum of two. Additional SALs may only be added with the same interface, electrical or optical, and with Telephone Company electronics or without Telephone Company electronics as the First System. The appropriate NRC is applied per SAL.

Transport rate elements are applied per SAL when transport between offices is required. In instances when a SAL is ordered to a second CDL in conjunction with a 3-System SAL and Transport between offices is required Transport rate elements are applied per circuit.

* High Capacity DS1 and DS3 services may be provided between service areas shown under 5.2.7(H), where facilities and conditions permit.

© 2022 Frontier Communications Parent, Inc. All rights reserved.

FACILITIES FOR INTERSTATE ACCESS

5. SPECIAL ACCESS (Cont'd)

5.6 Rate Regulations (Cont'd)

5.6.11 DS3 High Capacity Service* (Cont'd)

(A) DS3 Rate Structure (Cont'd)

Unlimited System # (T)

The Unlimited System allows the same customer, between the same CDL and the serving wire center, to order additional DS3 SALs, with no maximum. Additional SALs may only be added with the same interface, electrical or optical, and with Telephone Company electronics or without Telephone Company electronics as the First System. The appropriate NRC is applied per SAL.

Transport rate elements are applied per SAL when transport between offices is required. In instances when a SAL is ordered to a second CDL in conjunction with an Unlimited System SAL and Transport between offices is required Transport rate elements are applied per circuit.

Group Systems

Group System DS3s are limited to those services so equipped and in service as of March 4, 1999. Group System DS3s provide a total capacity of 12 (DS3 x 12) or 24 (DS3 x 24) DS3 SALs. All DS3s in a Group System must be between the same CDL and serving wire center.

* High Capacity DS1 and DS3 services may be provided between service areas shown under 5.2.7(H), where facilities and conditions permit.

\# Effective November 21, 2017, new subscriptions to DS3 3-System and Unlimited System are no longer permitted. DS3 3-System and Unlimited System customers subscribed as of November 21, 2017 may continue with their existing subscriptions. If at any time an existing customer terminates its DS3 3-System and Unlimited System, the customer may not re-subscribe to the plan.

© 2022 Frontier Communications Parent, Inc. All rights reserved.

5. SPECIAL ACCESS (Cont'd)

5.6 Rate Regulations (Cont'd)

5.6.11 DS3 High Capacity Service (Cont'd)

(A) DS3 Rate Structure (Cont'd)

A DS3 SAL provides a spare transmission path (transmit and receive) connected to an automatic protection switch. In the event of failure in the primary service, traffic will be automatically transferred to the spare transmission facilities. The spare transmission path will normally be provided on the same route as the primary path. When a customer orders a DS3 SAL, the customer may request that the spare transmission path be provided via an alternate route provisioned as the Telephone Company may elect. If common points for the primary and alternate route become necessary, these points will be identified by the Telephone Company and provided to the ordering customer. Should the routing arrangement require special routing requirements specified by the customer, other rates and regulations as set forth in Section 9 or Section 10 may be applicable.

A customer may order the same or different type of DS3 SALs for each CDL(s) at which DS3 service is terminated.

When a customer requests the disconnect of a DS3 service in the 3 System DS3 or Unlimited System DS3, an Additional System DS3 SAL must be disconnected first. When only the First DS3 service exists, that service will be disconnected.

Any costs associated with Special Construction as set forth in Section 3.1.3 preceding may apply.

DS3 Special Transport contains two rate elements, Special Transport Termination and Special Transport Facility. Special Transport Termination rates apply for the termination of each end of the interoffice facility. Special Transport Facility rates apply for each airline mile of the interoffice facility. Group System DS3* Transport Terminations (DS3 x 12 and DS3 x 24) and Group System DS3* Transport Facilities are only available when connected to at least one DS3 Group System* SAL of the same level (12 or 24). In addition, the Special Transport Facility and Special Transport Termination rates apply per DS3 Group of 12 or 24.*

DS3 Banded Special Transport applies as a single rate per mileage band in accordance with Section 23.16 following.

* Limited to those services so equipped and in service as of March 4, 1999.

© 2022 Frontier Communications Parent, Inc. All rights reserved.

5. SPECIAL ACCESS (Cont'd)

5.6 Rate Regulations (Cont'd)

5.6.11 DS3 High Capacity Service (Cont'd) #

(B) Service Periods #

Individual DS3s and System DS3s are offered under four service periods, each with different rate levels. The service periods are 1, 3, 5 and 7 years. The customer must specify the service period at the time the service is ordered. First and Additional DS3 SALs (3 System DS3s and Unlimited System DS3s) can have a different service period. However, each DS3 SAL of a two point DS3 service must have the same service period.

(C) Expiration of Service Period #, ##

At the expiration of a service period, the service will convert to the Individual System Month to Month Rate. (C)

Effective November 19, 2021, DS3 Service Periods are no longer permitted. DS3 Service Periods in effect as of November 19, 2021 may continue the existing term but will not be eligible to extend, renew, reenroll in, convert to a new service period, or in any other way continue their existing plan beyond its current expiration. At expiration of the service period the service will convert to the Month to Month Rate. If at any time an existing customer terminates its DS3 Service Period, the customer may not re-subscribe to the rate.

Effective July 26, 2022 Any DS3 Service billing at the Month to Month rate will convert to the DS3 Individual System Month to Month rate. In addition, at the expiration of a Service Period, the DS3 service will convert to the Individual System Month to Month rate. (N)

© 2022 Frontier Communications Parent, Inc. All rights reserved.

5. SPECIAL ACCESS (Cont'd)

5.6 Rate Regulations (Cont'd)

5.6.11 DS3 High Capacity Service (Cont'd)

(D) Discontinuance Without Liability DS3 Service Period (C)

Should the recurring charges for a customer's DS3 Service increase, in aggregate, by more than 10% from the original recurring charges during the service period, the customer may, at their option, terminate the DS3 service without penalty or liability.

The customer may cancel the service period of a DS3 Service that is provided under this Section 5.6.11 in order to subscribe such DS3 Service to an NDP as set forth in Section 23.1 following.

The customer may cancel the service period of a DS3 Service that is provided under this Section 5.6.11 in order to replace the DS3 Service with a Replacing Service pursuant to the Technology Migration regulations set forth in Section 2.10 preceding.

(E) Discontinuance With Liability - DS3 Service Period

When a DS3 service is discontinued prior to the end of the service period, the customer will be liable for a percentage of the total monthly charges for the remaining portion of the applicable service period. This charge will be based on the rates in effect at the time of disconnect. There are two liability periods for DS3 service, "first liability period" and "subsequent liability period". The "first liability period" is the period beginning from the establishment of the DS3 and is based on the customer's initial commitment term for the DS3. The "subsequent liability period" is the period after the customer's initial commitment term has expired and the customer wants to renew the DS3 service with the existing term period or select a new DS3 term period. The customer's total liability for the "first liability period" or "subsequent liability period" is dependent upon the number of months remaining within the year that the service is discontinued times the liability rate for that year plus the total monthly charges for each annual period remaining in the "first liability period" or "subsequent liability period" times the applicable liability rate. The liability rates for each year of the service period are as follows: (C)

© 2022 Frontier Communications Parent, Inc. All rights reserved.

5. SPECIAL ACCESS (Cont'd)

5.6 Rate Regulations (Cont'd)

5.6.11 DS3 High Capacity Service (Cont'd)

(E) Discontinuance With Liability - DS3 Service Period (Cont'd) (C)

Year In Which Service Is Discontinued	1st Liability Period Rate	Subsequent Liability Period Rate
1	45%	20%
2	30%	20%
3	25%	20%
4	20%	20%
5	20%	20%
6	20%	20%
7	20%	20%

For example. if a customer with a first liability period of seven years discontinues the DS3 service after six months within the 4th year, the customer will be liable for 20% of the total monthly charges for six months, 20% of the total monthly charges for the 6th year and 20% of the total monthly charges for the 7th year.

For example, if DS3 service is disconnected during the subsequent seven year liability period, the customer will be liable for 20% of the total monthly charges for the remaining months for each annual period remaining in the seven year service period.

Customers with a service period arrangement of three years or greater established on or prior to September 17, 1992, who discontinue service are eligible for limitation of the termination liability as set forth below.

Customer liability will be calculated as previously stated but will be limited to:

The dollar difference between 1) the amount the customer has already paid and, 2) any additional charges that the customer would have paid for service if the customer had taken a shorter term offering corresponding to the term actually used.

For example, if a customer with a seven year service period discontinues service six months after the end of the third year, the customer liability will not exceed:

(Three year monthly rate - Seven year monthly rate) x 42 months (C)

© 2022 Frontier Communications Parent, Inc. All rights reserved.

5. SPECIAL ACCESS (Cont'd)

5.6 Rate Regulations (Cont'd)

5.6.11 DS3 High Capacity Service (Cont'd)

(F) Reserved for Future Use

(G) Upgrades

(1) Upgrade to Higher Speed Service

Customers may elect to upgrade DS3 service(s) to a higher speed during a first liability period or subsequent liability period. The higher capacity service requires the Individual System Month to Month rate and a new minimum period as described in 5.6.11 (A). The upgraded service will be subject to all appropriate NRCs. (C)

If the following conditions exist, no termination liabilities will be applied:

- Both the existing and the new services are provided solely by the Company.
- The order to discontinue a service at an existing speed or capacity and the order for the upgraded service are received by the Company at the same time.
- The new service will be provided at the same customer location(s) as the discontinued service.
- The fixed-period plan for the upgraded service(s) meets or exceeds the remaining length of the existing fixed-period plan, except where an equal to or longer fixed-period plan is not available, in which case the longest fixed-period plan must be selected.
- The total monthly rate of the new agreement is equal to or greater than the total monthly rate of the existing agreement period.
- The monthly rates for the upgraded services and/or service elements will be those in effect at the time of the service upgrade. The upgraded service will be subject to all appropriate nonrecurring charges.
- Termination liability charges will not apply as long as the upgraded service remains connected at the same point of termination(s) or meets the requirements set forth in Section 5.6.4(B)(2).

© 2022 Frontier Communications Parent, Inc. All rights reserved.

5. SPECIAL ACCESS (Cont'd)

5.6 Rate Regulations (Cont'd)

5.6.11 DS3 High Capacity Service (Cont'd)

(G) Upgrades (Cont'd)

(2) Technology Migration (C)

For customers who subscribe to or renew their subscription to a High Capacity Digital DS3 Service under a service period on or after December 2, 2010, the customer may disconnect a High Capacity Digital DS3 Service in order to replace such service with a Replacing Service pursuant to the Technology Migration regulations set forth in Section 2.10 preceding.

For customers who subscribed to a High Capacity Digital DS3 Service under a service period prior to December 2, 2010, Section 5.6.11(G)(1) preceding includes replacements of a High Capacity Digital DS3 Service with a Telephone Company provided Ethernet private line service or a Telephone Company provided switched Ethernet service of a higher speed. However, the customer may, at its option, replace a High Capacity Digital DS3 Service with a Replacing Service pursuant to the Technology Migration regulations set forth in Section 2.10 preceding in lieu of Section 5.6.11(G)(1) preceding. (C)

© 2022 Frontier Communications Parent, Inc. All rights reserved.

5. SPECIAL ACCESS (Cont'd)

5.6 Rate Regulations (Cont'd)

5.6.11 DS3 High Capacity Service (Cont'd)

(H) DS3 Multiplexer Cross Connect Arrangement

The DS3 Multiplexer Cross Connect Arrangement allows a customer to (1) cross connect digital DS-1 channels from a DS3 Multiplexer to another DS3 Multiplexer or (2) to cross connect digital DS1 channels from a DS3 Multiplexer to an OC-3 CO-Node purchased from Section (20). When the DS3 Multiplexer Cross Connect is applied between a DS3 Multiplexer and an OC-3 CO-Node, applicable Section (20) rate elements are applied in addition to the DS3 Multiplexer Cross Connect. If the DS3 multiplexer is located in a different hub wire center then the other DS3 multiplexer or OC-3 CO-Node, DS1 special transport will apply in addition to the DS3 Cross Connect charge. The customer must provide the (CFA and SCFA) for both multiplexed services or OC-3 CO-Node on the ASR.

The rate as specified in Section 5.7.15 will apply per cross connect arrangement.

The DS3 Multiplexer Cross Connect Arrangement is not available with a DS3 Premises Multiplexer.

© 2022 Frontier Communications Parent, Inc. All rights reserved.

5. SPECIAL ACCESS (Cont'd)

5.6 Rate Regulations (Cont'd)

5.6.11 DS3 High Capacity Service (Cont'd)

(I) Partitioned Billing Arrangement (PBA)

PBA is a service arrangement that allows System DS3 (3 System, Unlimited System, or Group System*) customers to partition the multiple DS3s to a number of CDLs on the other end of the circuit (see diagram below). All rate elements associated with the PBA must be billed to the same customer.

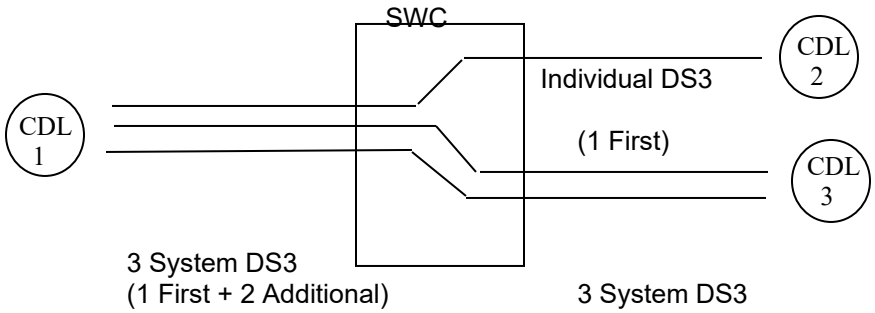

For 3 System DS3s and Unlimited System DS3s ordered under a PBA, each CDL must have a first system SAL. Additional SALs may then be ordered under the normal System terms and conditions.

* Limited to those services so equipped and in service as of March 9, 1999.

© 2022 Frontier Communications Parent, Inc. All rights reserved.

5. SPECIAL ACCESS (Cont'd)

5.6 Rate Regulations (Cont'd)

5.6.11 DS3 High Capacity Service (Cont'd)

(I) Partitioned Billing Arrangement (PBA) (Cont'd)

When Group System DS3 Special Transport* is provided as part of a PBA, a Group System DS3 SAL* of the same level (DS3 x 12, DS3 x 24)* must be connected to one end of the Group DS3 Special Transport*. Under a PBA only, DS3 x 12 Group System Special Transport* may be connected to DS3 x 24 Group System Special Transport* at hub wire centers. Also, standard DS3 Special Transport may be connected to either DS3 Group System Special Transport* at hub wire centers. All DS3 Special Transport Terminations apply for each type of DS3 Special Transport.

When ordering a PBA the customer must specify on the ASR the Access Service Group (ASG) and the First System DS3 circuit identification (ECCKT) at both CDLs. Each 3 System DS3 and/or Unlimited System DS3 at a CDL must be ordered as separate PBAs.

Customers with existing DS3 Systems (3 System, Unlimited System, or Group System*) may convert to a PBA. To convert, the customer must issue discontinuance of service ASR(s) for the existing DS3s and establishment of new service ASR(s) for each CDL to be converted to the PBA. If no physical changes to the service(s) are required, no NRCs apply. If any physical changes are required, appropriate NRCs will apply.

* Limited to those services so equipped and in service as of March 9, 1999.

© 2022 Frontier Communications Parent, Inc. All rights reserved.

5. SPECIAL ACCESS (Cont'd)

5.6 Rate Regulations (Cont'd)

5.6.12 Optional Payment Plan (OPP)# (T)

(A) General

(1) The terms and conditions specified herein are applicable to FiberConnect, and DDS services. Additional terms and conditions for FT1 OPP are set forth in 5.6.12(H). Additional terms and conditions for DDS are set forth in 5.6.12(I).

(2) Only the Special Access Line (SAL) rate element is available under an OPP. All other associated rate elements or additional features are available at the standard month-to-month tariffed rates and regulations.

(3) (Reserved for Future Use)

(4) Three year and five year OPP rates will be equal to or less than the one year OPP rates. Decreases to the one year OPP will flow through to the three year and five year OPP.

(5) Payment periods of one year, three year, and five years are available to all customers at the applicable rates set forth in 5.7.5(B), 5.7.8 or 5.7.9(B) regardless of when they subscribe to an OPP arrangement.

(6) The customer must designate on the ASR the payment period for the OPP.

(7) Inside moves, provided in accordance with 5.6.4, will not incur termination liability charges.

(8) Outside moves provided in accordance with 5.6.4(B)(2) will allow the customer to retain the same OPP payment period. Any other move will be treated as a disconnect of the service and termination liability charges will apply.

Effective November 21, 2017, new subscriptions to OPP is no longer permitted. OPP customers subscribed as of November 21, 2017 may continue with their existing subscriptions. If at any time an existing customer terminates its OPP, the customer may not re-subscribe to the plan.

© 2022 Frontier Communications Parent, Inc. All rights reserved.

FACILITIES FOR INTERSTATE ACCESS

5. SPECIAL ACCESS (Cont'd)

5.6 Rate Regulations (Cont'd)

5.6.12 Optional Payment Plan (OPP)# (Cont'd) (T)

(B) Changes in Length of OPP Period

Prior to the completion of the selected OPP period, the customer may elect to convert to a new OPP period of the same or different length, subject to the following conditions:

- No credit toward the new payment period will be given for payments made under the original OPP arrangement.
- Nonrecurring charges will not be reapplied for existing service(s).
- If the new OPP period is shorter in length than the time remaining under the existing OPP, the change to the new OPP period constitutes a disconnect of the existing OPP service and termination liability charges apply.

(C) Renewal Options

(1) At the expiration of an OPP period, the Telephone Company will automatically renew the service at the same OPP period unless the customer chooses to convert to a different OPP period, convert to month-to-month rates (except FiberConnect) or discontinue service.

(a) Conversion to a different OPP period will require the customer to submit a change order ASR. Conversion to a different OPP period will be allowed without application of any nonrecurring or ordering charges.

(b) Conversion to month-to-month rates will be treated as a disconnect of service and establishment of new service. If no other changes are ordered, no NRCs will apply.

Service availability limited. Refer to # footnote on Page 5-105. (N)

© 2022 Frontier Communications Parent, Inc. All rights reserved.

FACILITIES FOR INTERSTATE ACCESS

5. SPECIAL ACCESS (Cont'd)

5.6 Rate Regulations (Cont'd)

5.6.12 Optional Payment Plan (OPP)# (Cont'd) (T)

(D) Notification of Discontinuance

An ASR for discontinuance of an OPP arrangement must be received by the Telephone Company at least thirty (30) days prior to actual disconnect of service. Monthly charges will apply for a period of thirty (30) days from the date the Telephone Company receives disconnect notification or until the requested disconnect date, whichever period is longer.

(E) Upgrade to Higher Speed Service

Customers may elect to upgrade service(s) to a higher speed during an OPP period, subject to the following conditions:

- The upgraded service will be subject to all appropriate nonrecurring charges.
- Termination liability charges will not apply as long as the upgraded service remains connected at the same point of termination(s) or meets the requirements set forth in 5.6.4(B)(2).
- If the upgrade involves establishing a multiplexing arrangement, termination liability charges will not apply if the hub wire center is the same one associated with the customer designated location.

(F) Termination Liability

When an OPP service is discontinued prior to the end of the period, termination liability charges, as set forth below, will apply based on the remainder of the OPP period in effect at the time of disconnect.

One Year OPP - 50% of any remaining portion of the first year's recurring charges.

Three Year OPP - 50% of any remaining portion of the first year's recurring charges. In addition, for any remaining portion of the second and third years, the customer will be liable for 10% of the total monthly recurring charges in that time period.

Five Year OPP - 50% of any remaining portion of the first year's recurring charges. In addition, for any remaining portion of the second through fifth years, the customer will be liable for 20% of the total monthly recurring charges in that time period.

Service availability limited. Refer to # footnote on Page 5-105. (N)

© 2022 Frontier Communications Parent, Inc. All rights reserved.

FACILITIES FOR INTERSTATE ACCESS

5. SPECIAL ACCESS (Cont'd)

5.6 Rate Regulations (Cont'd)

5.6.12 Optional Payment Plan (OPP)# (Cont'd) (T)

(G) Termination Without Liability

During an OPP period, should the currently effective rate for a customer's service increase, the customer may, at their option, terminate the OPP arrangement without penalty or liability.

(H) Reserved for Future Use

(I) OPP for DDS

(1) For conversion of existing month-to-month DDS to an OPP arrangement, the customer will be required to submit a change order ASR to convert to the OPP. No service or billing interruption will occur when a customer converts from month-to-month rates to OPP rates. If no other changes to the service are ordered, no charges will apply.

(2) A customer may upgrade from a DDS OPP to an FT1 OPP subject to the following rate applications:

- The changed service will be subject to all appropriate nonrecurring charges.

- Termination liability charges will not apply as long as the changed service remains connected at the same point(s) of termination or meets the requirements of 5.6.4(B)(2).

Service availability limited. Refer to # footnote on Page 5-105. (N)

© 2022 Frontier Communications Parent, Inc. All rights reserved.

FACILITIES FOR INTERSTATE ACCESS

5. SPECIAL ACCESS (Cont'd)

5.6 Rate Regulations (Cont'd)

5.6.13 Four Wire Voiceband and Digital Data Service (DDS) Rate Stability Plan (RSP)# (T)

(A) Description

The Four Wire Voiceband and DDS RSP will allow customers to stabilize their monthly recurring rates (MRCs) for Four Wire Voiceband and DDS SALs and associated Voiceband and DDS Special Transport. This service is offered for a fixed service period at the rates specified in Section 5.7.16. The RSP allows customers to select a service commitment period during which the rates will be stabilized. The service commitment periods are 3 years or 5 years, which must be specified in writing at the time of enrollment.

The RSP is available to customers who qualify for the Plan's eligibility requirements and agree to the Plan's terms and conditions.

Customers of the Plan will not be subject to Telephone Company initiated rate increases during their service commitment period. Rate changes may occur as a result of FCC action.

Four Wire Voiceband and DDS RSP rates will not be greater than standard month to month Four Wire Voiceband and DDS SAL rates and associated Voiceband and DDS Special Transport rates.

Effective November 21, 2017, new subscriptions to Four Wire Voiceband (DDS) RSP are no longer permitted. Four Wire Voiceband (DDS) RSP customers subscribed as of November 21, 2017 may continue with their existing subscriptions. If at any time an existing customer terminates its Four Wire Voiceband (DDS) RSP, the customer may not re-subscribe to the plan.

© 2022 Frontier Communications Parent, Inc. All rights reserved.

FACILITIES FOR INTERSTATE ACCESS

5. SPECIAL ACCESS (Cont'd)

5.6 Rate Regulations (Cont'd)

5.6.13 Four Wire Voiceband and Digital Data Service (DDS) Rate Stability Plan (RSP)# (Cont'd) (T)

(B) Eligibility Requirement

The eligibility requirement for RSP is a minimum combined national commitment level of 500 Four Wire Voiceband and DDS SALs. These SALs must be interstate services and provided by the GTOCs in their serving areas. Any associated Special Transport is also subject to the terms and conditions of the RSP.

At an annual review, if the customer has committed to more than the minimum number of 500 SALs required, an allowance of minus 2% or plus 5% will be considered as having met the commitment level.

When the customer elects to enroll in an RSP, they must specify, in writing, the enrollment date (which will be the anniversary date) and the commitment level. The specified enrollment date must be within 30 days of receipt by the Telephone Company. By the specified date, the customer must issue ASRs to add SALs to the RSP and/or convert month-to-month SALs to the RSP to fall within the commitment range specified above.

Besides the eligibility requirement, customers of this plan are also subject to the terms and conditions specified in Section 5.6.13(C).

Service availability limited. Refer to # footnote on Page 5-109. (N)

© 2022 Frontier Communications Parent, Inc. All rights reserved.

FACILITIES FOR INTERSTATE ACCESS

5. SPECIAL ACCESS (Cont'd)

5.6 Rate Regulations (Cont'd)

5.6.13 Four Wire Voiceband and Digital Data Service (DDS) Rate Stability Plan (RSP)# (Cont'd) (T)

(C) RSP Terms and Conditions

(1) Written notice must be submitted by the customer to change the commitment level of SALs. If, as the result of increasing or decreasing the commitment level, service is changed from the RSP to a month-to-month arrangement or from a month-to-month arrangement to the RSP, an ASR will be required within 30 days for all services changed. Only one RSP will be allowed per customer. Penalties for decreasing the commitment level are discussed in 5.6.13(C)(4).

(2) Each customer's RSP will be reviewed annually. The customer will be notified in writing as to the status of the RSP. This notification will inform the customer of any RSP SALs that must be converted. If the customer has increased the number of SALs from the initial commitment beyond the range specified in 5.6.13(B), he will have the option of increasing the commitment level for the remainder of the plan. If the customer chooses not to increase the commitment level of SALs for the remaining year(s) of the plan, he must convert the increased number of SALs to standard month-to-month SALs to a level within the range specified in 5.6.13(B). The customer may decrease the commitment level at the time of the annual review and pay the applicable penalties for the amount of SALs being decreased. The customer will have 30 days from the receipt of this notification to convert SALs.

(3) If a service has two SALs, to include this service as part of the RSP, both SALs must be in the RSP. RSP rates for Special Transport are only applicable when the associated SALs are included in the RSP.

After enrolling in the plan, the customer may add or delete RSP SALs at any time during the plan.

(N)

Service availability limited. Refer to # footnote on Page 5-109.

© 2022 Frontier Communications Parent, Inc. All rights reserved.

FACILITIES FOR INTERSTATE ACCESS

5. SPECIAL ACCESS (Cont'd)

5.6 Rate Regulations (Cont'd)

5.6.13 Four Wire Voiceband and Digital Data Service (DDS) Rate Stability Plan (RSP)# (Cont'd) (T)

(C) RSP Terms and Conditions (Cont'd)

(4) When the number of RSP SALs at the annual review is less than the acceptable commitment range, penalty charges will apply, based on the difference between the commitment level less 2% and the number of RSP SALs in effect at the annual review. For example, if the commitment level is 100 and the customer has 90 RSP SALs at the time of the annual review, the penalties described below will be applied to the difference of 98 (2% less than 100) and 90, which would be 8 in this example.

The penalty charged is equal to the unweighted average of the customer's applicable RSP Four Wire Voiceband SAL and DDS SAL monthly rates multiplied by the deficient number of SALs.

Example:

Customer has Four-Wire Voiceband and DDS services in California, Florida and Texas. RSP rates for these jurisdictions are as follows:

	Effective RSP Rate				
Type SAL	California		Florida		Texas
Four-Wire Voiceband	$41.80		$45.60		$45.60
DDS (2.4, 4.8, 9.6, 19.2 Kbps)	60.80		60.80		60.80
DDS (56, 64 Kbps)	79.80		79.80		79.80
Totals	$182.40	+	$186.20	+	$186.20
	=$554.80				

UNWEIGHTED AVERAGE OF RSP RATES: $554.80 / 9 = $61.64

Review of customer's records reveals commitment deficiency of eight SALs. The applicable penalty charged would be $61.64 x 8 = $493.12.

(N)

Service availability limited. Refer to # footnote on Page 5-109.

© 2022 Frontier Communications Parent, Inc. All rights reserved.

FACILITIES FOR INTERSTATE ACCESS

5. SPECIAL ACCESS (Cont'd)

5.6 Rate Regulations (Cont'd)

5.6.13 Four Wire Voiceband and Digital Data Service (DDS) Rate Stability Plan (RSP)# (Cont'd) (T)

(D) RSP Nonrecurring Charges

No nonrecurring charge will apply for the ASRs processed to convert existing SALs to or from the RSP. All applicable Special Access NRCs will apply for ASRs processed to add new SALs. Refer to Section 5.7.2 for Voiceband SAL NRCs and Section 5.7.5 for Digital Data Service SAL NRCs.

(E) RSP Services

This Plan is offered only for Four Wire Voiceband and Digital Data Service (DDS).

Service availability limited. Refer to # footnote on Page 5-109. (N)

© 2022 Frontier Communications Parent, Inc. All rights reserved.

FACILITIES FOR INTERSTATE ACCESS

5. SPECIAL ACCESS (Cont'd)

5.6 Rate Regulations (Cont'd)

5.6.13 Four Wire Voiceband and Digital Data Service (DDS) Rate Stability Plan (RSP)# (Cont'd) (T)

(F) RSP Application

(1) Rate Elements Subject to the Plan

The RSP stabilizes the MRCs for Four Wire Voiceband SALs, DDS SALs, and their associated Voiceband and DDS Special Transport MRCs. The MRCs for these rate elements will not be increased by initiation of the Telephone Company from the rates in effect as of the RSP enrollment date for the duration of the service commitment period. The RSP enrollment date is the date on which the RSP customer signs a written agreement for RSP and otherwise meets the Plan's eligibility requirements.

All RSP customers will pay the same RSP rate at any given point in time. However, each RSP customer will have only one RSP enrollment date, which will apply to all of the customer's rate elements subject to the Plan. This is regardless of whether services were existing and converted to the RSP, added at the time of enrollment, or added subsequently during the RSP service commitment period.

Before the expiration of a customer's RSP service commitment period, the RSP may be replaced by a new RSP at the tariffed rates currently in effect. The customer will not incur any penalties associated with their current plan if the elected service period is equal to or greater than the time remaining on the current RSP. For any new services added to the Plan, the MRCs will be at the rate in effect when the customer elects the new plan. However, billing for these services will not begin until the services have been installed.

The RSP does not apply to NRCs associated with Four Wire Voiceband and DDS, supplemental features and multiplexing arrangements.

Service availability limited. Refer to # footnote on Page 5-109. (N)

© 2022 Frontier Communications Parent, Inc. All rights reserved.

FACILITIES FOR INTERSTATE ACCESS

5. SPECIAL ACCESS (Cont'd)

5.6 Rate Regulations (Cont'd)

5.6.13 Four Wire Voiceband and Digital Data Service (DDS) Rate Stability Plan (RSP)# (Cont'd) (T)

(F) RSP Application (Cont'd)

(2) RSP Expiration

(A) At the end of the service commitment period, the customer may either continue the services at non-RSP rates in effect, elect a new RSP, or exercise the RSP Extension Option (RSP-EX) as described below. If the customer chooses to convert to a new RSP, the new service period will begin the day following the expiration of the old Plan. The RSP rate for the new Plan will be at those in effect at the beginning of the new service period. If the customer fails to make this selection, the Telephone Company will notify the customer and continue one (1) additional month of RSP billing. If the customer does not notify the Company of its intentions within thirty (30) days from the expiration date of the RSP, the services under the plan will revert to general tariffed rates, unless set forth below.

(B) To qualify for RSP-EX, the customer must meet the following requirements: 1) customer must complete an RSP term; 2) customer must subscribe in writing; and 3) term of the RSP-EX must be equal to that of the customer's current, expiring, or expired plan. Customers who have an RSP that expired within the twelve (12) month period prior to August 7, 2004, may also elect the RSP-EX, provided that such customers, (a) notify the Telephone Company in writing no later than October 6, 2004, of their intention to elect the RSP-EX; and (b) select an RSP-EX term equal to that of their current or expired RSP.

(C) Customer's RSP-EX rates will be the then prevailing rates of the current, expired, or expiring RSP, as applicable. The RSP-EX shall be effective as of 1) the day following the expiration date of their current plan for those customers (i) whose plan has not yet expired, or (ii) has expired and such customer is within the thirty (30) day period set forth in 5.6.13(F)(2)(A) preceding; or 2) the enrollment date of the RSP-EX for those customers whose plan has already expired within the twelve (12) month period prior to August 7, 2004, and (i) who have renewed their RSP or (ii) who did not renew their RSP within the thirty (30) day period following expiration of their RSP as set forth in 5.6.13(F)(2)(A) preceding.

Service availability limited. Refer to # footnote on Page 5-109. (N)

© 2022 Frontier Communications Parent, Inc. All rights reserved.

FACILITIES FOR INTERSTATE ACCESS

5. SPECIAL ACCESS (Cont'd)

5.6 Rate Regulations (Cont'd)

5.6.13 Four Wire Voiceband and Digital Data Service (DDS) Rate Stability Plan (RSP)# (Cont'd) (T)

(F) RSP Application (Cont'd)

(2) RSP Expiration (Cont'd)

(D) All terms and conditions of the RSP as set forth in section 5.6.13 preceding apply to the RSP-EX with the exception of the following:

(a) In lieu of the requirement set forth in the second paragraph of Section 5.6.13(B) preceding, at an annual review, an allowance of minus twenty-five (-25%) will be considered as having met the commitment level. When the number of RSP SALs at the annual review is less than the acceptable commitment range, penalty charges will apply based on the difference between the commitment level less twenty-five (25%) and the number of RSP SALs in effect at the annual review. For example, if the commitment level is 100 and the customer has 70 RSP SALs at the time of the annual review, the penalties described above will be applied to the difference between 75 (25% less than 100) and 70, which would result in 5 under this example;

(b) The customer may reset its commitment level upon electing the RSP-EX. In addition, during any plan year, the customer may reset the commitment level or terminate the RSP-EX by notifying the Telephone Company in writing no later than sixty (60) days prior to the annual review date of the RSP-EX. The termination or change in commitment level shall be effective on the annual review date. Customers who terminate the plan will revert to general tariff rates and terms effective on the annual review date. Customers will not be liable for any penalties for successive years remaining in the RSP-EX from the annual review date on which the plan was terminated. Customer will be liable for penalties or liabilities if the RSP-EX is terminated prior to an annual review date. For example, if customer decides to terminate the RSP-EX during month four of year two of the plan, then customer will be liable for any penalties for failing to meet its commitment in year two as set forth herein. However, under this example, customer will not be liable for any termination liabilities associated with successive years after year two remaining in the RSP-EX.

Service availability limited. Refer to # footnote on Page 5-109. (N)

© 2022 Frontier Communications Parent, Inc. All rights reserved.

FACILITIES FOR INTERSTATE ACCESS

5. SPECIAL ACCESS (Cont'd)

5.6 Rate Regulations (Cont'd)

5.6.13 Four Wire Voiceband and Digital Data Service (DDS) Rate Stability Plan (RSP) #(Cont'd) (T)

(F) RSP Application (Cont'd)

(2) RSP Expiration (Cont'd)

(D) (Cont'd)

(c) The minimum combined national commitment level of 500 Four-Wire Voiceband and DDS SALs as set forth in the first paragraph of Section 5.6.13(B) preceding is not applicable to customers of the RSP-EX.

(3) Upgrade to Higher Capacity Service

The customer may upgrade service to a high capacity service during the RSP period. The upgraded service will be subject to all appropriate NRCs.

If both of the following conditions exist, the commitment level will be decreased by the number of RSP SALs that are upgraded to a high capacity service.

- The customer must notify the Telephone Company in writing in addition to issuing an ASR.

- The high capacity service period must be equal to or longer in length than the time remaining under the RSP.

Service availability limited. Refer to # footnote on Page 5-109. (N)

© 2022 Frontier Communications Parent, Inc. All rights reserved.

5. SPECIAL ACCESS (Cont'd)

5.6 Rate Regulations (Cont'd)

5.6.14 DS1 Term Volume Plans (TVP)# (T)

(A) Description

One-, Two-, Three-, Five-Year DS1 Term Volume Plans (TVP)

The DS1 Term Volume Plan (TVP) allows customers discounts, which are applied to DS1 SALs based upon a volume and term commitment. The customer's DS1 SAL commitment level can be established on a nationwide basis or negotiated between the customer and the Telephone Company (i.e., state basis, regional basis, etc.). The TVP is offered for a 1, 2, 3 or 5 year term commitment period. All of the customer's TVP DS1 SALs will be billed at the same rate, based upon the state where the service is located, the length of the term selected by the customer, and the threshold level in which the commitment quantity falls. All other associated rate elements or additional features are available at the applicable tariffed rates and regulations.

During the TVP term, the customer may elect to increase the term or commitment level of the plan without any termination liability, provided there is no lapse of time between the effective date of the increase and the termination of the previously effective term or commitment quantity.

The new term length begins on the same start day as the term length it replaces. There will not be any retroactive adjustments of a discount due to a customer-initiated change in term or commitment quantity.

During the TVP term, a customer may not concurrently subscribe the same (C)
DS1 SALs to both the TVP and the National Discount Plan as set forth in (C)
Section 23.1 following.

(C)

Effective June 1, 2019, DS1 TVP/ETTVP plans are no longer permitted. DS1 TVP/ETTVP customers subscribed as of June 1, 2019 may continue with their existing subscriptions but will not be eligible to extend, renew, reenroll in, convert to a new TVP/ETTVP period, or in any other way continue their existing plan beyond on its currently scheduled expiration. If at any time an existing customer terminates its DS1 TVP/ETTVP, the customer may not re-subscribe to the plan.

© 2022 Frontier Communications Parent, Inc. All rights reserved.

5. SPECIAL ACCESS (Cont'd)

5.6 Rate Regulations (Cont'd)

5.6.14 DS1 Term Volume Plans (TVP)# (Cont'd) (T)

(A) Description (Cont'd)

Eight- and Ten-Year DS1 Term Volume Plans (ETTVP)

The Eight- and Ten-Year DS1 Term Volume Plans (ETTVP) allow customers discounts, which are applied to DS1 SALs based upon a volume and term commitment. The customer elects to enroll in an ETTVP by specifying in writing the enrollment date (which will be the anniversary date) and their volume and term commitment. (D)
(D)

The ETTVP is offered for an 8- or 10-year term commitment period. Time In-Service Credit (TISC) will be granted on a replaced TVP for uninterrupted TVP subscription time and applied toward the new 8- or 10-year commitment period. All of the customer's ETTVP DS1 SALs will be billed at the state rate in this Guide, based upon the state where the service is located, the length of the term selected by the customer, and the threshold level in which the commitment quantity falls. All other associated rate elements or additional features are available at the applicable tariffed rates and regulations.

During the ETTVP term, a customer may not concurrently subscribe the same (C)
DS1 SALs to both the ETTVP and the National Discount Plan as set forth in (C)
Section 23.1 following.

Service availability limited. Refer to # footnote on Page 5-118. (N)

© 2022 Frontier Communications Parent, Inc. All rights reserved.

FACILITIES FOR INTERSTATE ACCESS

5. SPECIAL ACCESS (Cont'd)

5.6 Rate Regulations (Cont'd)

5.6.14 DS1 Term Volume Plans (TVP)# (Cont'd)

(B) Rate Application

One-, Two-, Three-, Five-Year DS1 Term Volume Plans (TVP)

For conversion of existing month-to-month DS1 service to a TVP arrangement, the customer will be required to submit a change order ASR to convert to the TVP. No service or billing interruption will occur when a customer converts from month-to-month rates to a TVP. If no other changes to the service(s) are ordered, no charges will apply.

If a change involves establishing a multiplexing arrangement, termination liability charges will not apply if the hub wire center and the serving wire center of the customer designated location are the same.

Eight- and Ten-Year DS1 Term Volume Plan (ETTVP)

For conversion of existing month-to-month DS1 service to a ETTVP arrangement, the customer will be required to submit a change order ASR to convert to the ETTVP. No service or billing interruption will occur when a customer converts from month-to-month rates to a ETTVP. No TISC will be counted for termination liability purposes. If no other changes to the service(s) are ordered, no charges will apply. (C)

If a change involves establishing a multiplexing arrangement, termination liability charges will not apply if the hub wire center and the serving wire center of the customer designated location are the same.

Service availability limited. Refer to # footnote on Page 5-118.

© 2022 Frontier Communications Parent, Inc. All rights reserved.

FACILITIES FOR INTERSTATE ACCESS

5. SPECIAL ACCESS (Cont'd)

5.6 Rate Regulations (Cont'd)

5.6.14 DS1 Term Volume Plans (TVP)# (Cont'd) (T)

(C) Rate Changes

One-, Two-, Three-, Five-Year DS1 Term Volume Plans (TVP)

Rate changes in the TVP monthly recurring DS1 SAL rates will be passed on to subscribers of the plan. However, during the TVP period, should the rates increase, the customer may, at his/her option, terminate the TVP arrangement without penalty or liability, unless the increase is a result of FCC action.

Eight- and Ten-Year DS1 Term Volume Plan (ETTVP)

Rate changes in the ETTVP monthly recurring DS1 SAL rates will be passed on to subscribers of the plan. However, during the ETTVP period, should the rates increase, the customer may, at his/her option, terminate the ETTVP arrangement without penalty or liability, unless the increase is a result of FCC action.

(D) Threshold Levels

One-, Two-, Three-, Five-Year DS1 Term Volume Plans (TVP)

Two or more DS1 SALs are required to qualify for a TVP. Rates are applied based on the following DS1 SAL threshold levels: 2-60, 61-120, 121-240, 241-500, 501-1000, 1001-3000, 3001-6000, 6001-11,000 and Over 11,000.

Eight- and Ten-Year DS1 Term Volume Plan (ETTVP)

4000 or more DS1 SALs are required to qualify for an ETTVP. Rates are applied based on the following DS1 SAL threshold levels: 4000-6000; 6001-10,000; 10,001-20,000; 20,001-30,000; and Over 30,000.

Service availability limited. Refer to # footnote on Page 5-118. (N)

© 2022 Frontier Communications Parent, Inc. All rights reserved.

FACILITIES FOR INTERSTATE ACCESS

5. SPECIAL ACCESS (Cont'd)

5.6 Rate Regulations (Cont'd)

5.6.14 DS1 Term Volume Plans (TVP)# (Cont'd) (T)

(E) Changes to Commitment Quantity or Term

One-, Two-, Three-, Five-Year DS1 Term Volume Plans (TVP)

At any time during the plan term, the customer may increase the commitment quantity of DS1 SALs or commitment term to receive a lower threshold rate by submitting written notification to the Telephone Company.

At any time during the plan term, the customer may convert its One-, Two-, Three-, or Five-Year TVP to an Eight- or Ten-Year ETTVP. For purposes of the new term length, the ETTVP begins on the same anniversary date as the TVP it replaces. For example, if the original term began January 1, 2000, for a 5-year TVP, and the customer wants to convert to an 8-year ETTVP on November 21, 2003, the anniversary date for the 8-year ETTVP remains January 1, 2000. There will not be any retroactive adjustments of a discount due to a customer-initiated change in term or commitment quantity.

When a penalty is assessed at the annual review, as set forth in 5.6.14(I), the number of DS1 SALs in service will become the commitment quantity for the balance of the commitment term or until such time as a subsequent adjustment is required.

Eight- and Ten-Year DS1 Term Volume Plans (ETTVP)

At any time during the plan term, the customer may increase the term or volume commitment to receive a lower threshold rate by submitting written notification to the Telephone Company. No termination liability will be assessed provided there is no lapse of time between the effective date of the increase and the termination of the previously effective term or commitment quantity.

The new term length begins on the same anniversary date as the term length it replaces. There will not be any retroactive adjustments of a discount due to a customer-initiated change in term or commitment quantity. For example, if the original term began January 1, 2000, for an 8-year term, and the customer wants to convert to a 10-year plan on November 21, 2003, the anniversary date for the 10-year plan remains January 1, 2000.

Service availability limited. Refer to # footnote on Page 5-118. (N)

© 2022 Frontier Communications Parent, Inc. All rights reserved.

5. SPECIAL ACCESS (Cont'd)

5.6 Rate Regulations (Cont'd)

5.6.14 DS1 Term Volume Plans (TVP)# (Cont'd) (T)

(F) TVP Plan Enrollment

One-, Two-, Three-, Five-Year DS1 Term Volume Plans (TVP)

When the customer elects to enroll in a TVP the customer must specify, in writing, the enrollment date (which will be the anniversary date) and the DS1 SAL commitment quantity. The specified enrollment date must be within 30 days of receipt. By the specified date, the customer must submit a request in writing or issue ASR(s) to add DS1 SALs to the TVP and/or convert month-to-month arrangement DS1 SALs to the TVP to fall within the commitment quantity specified.

Eight- and Ten-Year DS1 Term Volume Plans (ETTVP

When the customer elects to enroll in an ETTVP the customer must specify, in writing, the enrollment date (which will be the anniversary date) and the term and volume DS1 SAL commitment. (D)
(D)

The specified enrollment date must be within 30 days of receipt of the written notice. By the specified enrollment date, the customer must submit a request in writing or issue ASR(s) to convert DS1 SALs to the ETTVP and/or convert month-to-month arrangement DS1 SALs to the ETTVP to fall within the commitment quantity specified.

Service availability limited. Refer to # footnote on Page 5-118. (N)

© 2022 Frontier Communications Parent, Inc. All rights reserved.

FACILITIES FOR INTERSTATE ACCESS

5. SPECIAL ACCESS (Cont'd)

5.6 Rate Regulations (Cont'd)

5.6.14 DS1 Term Volume Plans (TVP)# (Cont'd) (T)

(G) Annual Review

One-, Two-, Three-, Five-Year DS1 Term Volume Plans (TVP)

Each customer's TVP will be reviewed annually. The customer will be notified in writing as to the status of the TVP. If the in-service DS1 SAL quantity (including any DS1 SALs that were replaced by a Replacing Service using the methodology for a Technology Migration specified in Section 2.10.2 preceding) falls below the commitment quantity, an allowance of 3% will be considered as having met the commitment quantity. Where the customer does not meet the minimum quantity of DS1 SALs in service, penalties will be assessed as set forth under 5.6.14(I).

If the number of DS1 SALs increase from the initial commitment, the customer will have the option of increasing the commitment level for the remainder of their TVP. If the customer chooses not to increase the commitment level, he/she may covert the increased number of DS1 SALs to a monthly plan or a second TVP plan.

The customer may decrease the commitment level at the time of the annual review and pay the applicable penalties for the amount of DS1 SALs being decreased. Penalties will apply as set forth in 5.6.14(I).

The customer will have 30 days from receipt of notification to convert DS1 SALs. If the customer does not take action during the 30 day period, the commitment level will be automatically changed to the number of TVP DS1 SALs in effect at the annual review.

Service availability limited. Refer to # footnote on Page 5-118. (N)

© 2022 Frontier Communications Parent, Inc. All rights reserved.

5. SPECIAL ACCESS (Cont'd)

5.6 Rate Regulations (Cont'd)

5.6.14 DS1 Term Volume Plans (TVP)# (Cont'd)

(G) Annual Review (Cont'd)

Eight- and Ten-Year DS1 Term Volume Plans (ETTVP

Each customer's ETTVP will be reviewed annually. The customer will be notified in writing as to the status of the ETTVP. If the in-service DS1 SAL quantity (including any DS1 SALs that were replaced by a Replacing Service using the methodology for a Technology Migration specified in Section 2.10.2 preceding) falls below the commitment quantity penalties will be assessed as set forth under 5.6.14 (I).

If the in-service DS1 SAL quantity (including any DS1 SALs that were replaced by a Replacing Service using the methodology for a Technology Migration specified in Section 2.10.2 preceding) falls below the minimum threshold level of 4000 in-service ETTVP SALs, the ETTVP is automatically terminated and the ETTVP SALs are automatically converted to the Month to Month SAL rate at the state rate in this Guide, based upon the state where the service is located, and effective based on the anniversary date of the Expiration Date of the ETTVP. (N)

For example, if the expiration date of the ETTVP is 12/31/2023 and the annual review conducted 12/31/2021 reveals less than 4000 ETTVP SALs in-service, the ETTVP is automatically terminated effective 12/31/2021 and the in-service ETTVP SALs are automatically converted to the Month to Month SAL rate at the state rate in this Guide, based upon the state where the service is located, effective 1/1/2022. (N)

Service availability limited. Refer to # footnote on Page 5-118.

© 2022 Frontier Communications Parent, Inc. All rights reserved.

FACILITIES FOR INTERSTATE ACCESS

5. SPECIAL ACCESS (Cont'd)

5.6 Rate Regulations (Cont'd)

5.6.14 DS1 Term Volume Plans (TVP)# (Cont'd) (T)

(H) TVP/ETTVP Conditions

One-, Two-, Three-, Five-Year DS1 Term Volume Plans (TVP)

If a DS1 service (circuit) consists of two DS1 SALs, both DS1 SALs must be in the TVP.

After enrolling in the plan, the customer may delete or add DS1 SALs rated at the specified term period/threshold level rate at any time during the plan. For example, if the customer subscribes to a 2-year TVP at the 61-120 DS1 SAL threshold level, DS1 SALs may be added at any time at the 2-year 61-120 threshold rate level.

Eight- and Ten-Year DS1 Term Volume Plans (ETTVP)

If a DS1 service (circuit) consists of two DS1 SALs, both DS1 SALs must be in the ETTVP.

After enrolling in the plan, the customer may add DS1 SALs rated at the specified term period/threshold level rate at any time during the plan. For example, if the customer subscribes to an 8-year ETTVP at the 10,001-20,000 DS1 SAL threshold level, DS1 SALs may be added at any time at the 8-year 10,001-20,000 threshold rate level. New DS1 SALs enrolled in the ETTVP after the initial enrollment period must remain in the plan for a minimum period of 12 months. Any DS1 SALs disconnected within the 12-month minimum period will be subject to a minimum period charge equal to 100% of the MRCs for the remainder of the 12-month period.

Service availability limited. Refer to # footnote on Page 5-118. (N)

© 2022 Frontier Communications Parent, Inc. All rights reserved.

FACILITIES FOR INTERSTATE ACCESS

5. SPECIAL ACCESS (Cont'd)

5.6 Rate Regulations (Cont'd)

5.6.14 DS1 Term Volume Plans (TVP)# (Cont'd) (T)

(I) Penalties for Failing To Meet Commitment

One-, Two-, Three-, Five-Year DS1 Term Volume Plans (TVP)

When the number of TVP DS1 SALs at the annual review is less than the commitment quantity minus 3%, the penalty will be the lowest TVP rate for the current threshold in the states where the service is located, multiplied by the shortfall multiplied by 4 months.

For example, if the commitment quantity is 100 and the customer has 90 DS1 TVP SALs at the time of the annual review, the penalty described below will be applied to the shortfall difference of 97 (3% less than 100), and 90. Customer has DS1 SALs in California and Pennsylvania.

- Current threshold level is 61-120, 5 Year term
- In-service quantity at annual review = 90
- Shortfall is 97 - 90 = 7
- Penalty is calculated as follows:

$150.00* x 7 x 4 months = $4,200.00 penalty

* Lowest TVP MRC applied the customer (California rate)

Service availability limited. Refer to # footnote on Page 5-118. (N)

© 2022 Frontier Communications Parent, Inc. All rights reserved.

FACILITIES FOR INTERSTATE ACCESS

5. SPECIAL ACCESS (Cont'd)

5.6 Rate Regulations (Cont'd)

5.6.14 DS1 Term Volume Plans (TVP)# (Cont'd) (T)

(I) Penalties for Failing To Meet Commitment (Cont'd)

Eight- and Ten-Year DS1 Term Volume Plan (ETTVP)

When the number of ETTVP DS1 SALs at the annual review is less than the commitment quantity, the penalty will be the average ETTVP MRC per circuit, multiplied by the shortfall multiplied by 6 months.

For example, if the commitment quantity is 9000 and the customer has 8700 DS1 ETTVP SALs at the time of the annual review, the penalty described below will be applied to the shortfall difference of 9000 and 8700. Customer has DS1 SALs in every state.

- Current threshold level is 6001-10,000, 8 Year term
- Commitment quantity is 9000
- In-service quantity at annual review = 8700
- ETTVP monthly billing $1,070,100
- Average ETTVP MRC per circuit ($1,070,100 / 8700) = $123
- Shortfall is 9000-8700 = 300
- Penalty is calculated as follows:

$123.00* x 300 x 6 months = $ 221,400 penalty

* Average ETTVP MRC (MRC revenue divided by the number of SALs in-service)

Service availability limited. Refer to # footnote on Page 5-118. (N)

© 2022 Frontier Communications Parent, Inc. All rights reserved.

FACILITIES FOR INTERSTATE ACCESS

5. SPECIAL ACCESS (Cont'd)

5.6 Rate Regulations (Cont'd)

5.6.14 DS1 Term Volume Plans (TVP)# (Cont'd) (T)

(J) TVP Nonrecurring Charge

One-, Two-, Three-, Five-Year DS1 Term Volume Plans (TVP)

Customers subscribing to a TVP will be assessed a nonrecurring charge per DS1 SAL installed except when converting standard month-to-month DS1 SALs to a TVP.

Eight- and Ten-Year DS1 Term Volume Plans (ETTVP)

Customers subscribing to an ETTVP will be assessed a nonrecurring charge per DS1 SAL installed except when converting standard month-to-month DS1 SALs to an ETTVP.

Service availability limited. Refer to # footnote on Page 5-118. (N)

© 2022 Frontier Communications Parent, Inc. All rights reserved.

FACILITIES FOR INTERSTATE ACCESS

5. SPECIAL ACCESS (Cont'd)

5.6 Rate Regulations (Cont'd)

5.6.14 DS1 Term Volume Plans (TVP)# (Cont'd) (T)

(K) Changes in Length of a TVP Period

One-, Two-, Three-, Five-Year DS1 Term Volume Plans (TVP)

Prior to the expiration of a TVP period, the customer may elect to convert to a new TVP period of the same or different length, subject to the following conditions:

- no credit will be given for the new payment period for payments made under the original TVP arrangement
- NRCs will not be reapplied for existing service(s)
- if the new TVP period is shorter in length than the time remaining under the existing TVP, the change to the new TVP period constitutes a cancellation of the existing TVP and termination liability charges will apply as set forth under 5.16.14(O) following.

Eight- and Ten-Year DS1 Term Volume Plans (ETTVP)

Prior to the expiration of an ETTVP period, the customer may elect to convert to a new ETTVP or TVP period of the same or different length, subject to the following conditions:

- NRCs will not be reapplied for existing service(s)
- if the new ETTVP or TVP period is shorter in length than the time remaining under the existing ETTVP, the change to the new ETTVP or TVP period constitutes a cancellation of the existing ETTVP and termination liability charges will apply as set forth under 5.16.14(O) following.

Service availability limited. Refer to # footnote on Page 5-118. (N)

© 2022 Frontier Communications Parent, Inc. All rights reserved.

FACILITIES FOR INTERSTATE ACCESS

5. SPECIAL ACCESS (Cont'd)

5.6 Rate Regulations (Cont'd)

5.6.14 DS1 Term Volume Plans (TVP)# (Cont'd) (T)

(L) Options at Expiration

One-, Two-, Three-, Five-Year DS1 Term Volume Plans (TVP)

At the expiration of a TVP period, the customer may select one of the following:

(1) Select any then-effective TVP period to establish a new TVP. All terms and conditions, including termination liability, will apply to the new TVP period.
(2) Select any then-effective ETTVP period to establish a new ETTVP. All terms and conditions, including termination liability, will apply to the new ETTVP period.
(3) Discontinue TVP in order to subscribe services to National Discount Plan.
(4) Discontinue TVP and convert service to a month-to-month payment plan.

If the customer fails to notify the Telephone Company of its choice above prior to the expiration of its TVP period, the Telephone Company will notify the customer and continue two additional months of TVP billing. If the customer does not notify the Telephone Company of its choice above, in writing, within the first 60 days after the expiration date, billing will remain at the current threshold level and a new TVP period will begin based on the then-effective term and quantity commitment. All terms and conditions, including termination liability will apply to the new TVP period.

Service availability limited. Refer to # footnote on Page 5-118. (N)

© 2022 Frontier Communications Parent, Inc. All rights reserved.

5. SPECIAL ACCESS (Cont'd)

5.6 Rate Regulations (Cont'd)

5.6.14 DS1 Term Volume Plans (TVP)# (Cont'd) (T)

(L) Options at Expiration (Cont'd)

Eight- and Ten-Year DS1 Term Volume Plans (ETTVP)

At the expiration of an 8-year ETTVP period, the customer may select one of the following options:

(a) Select any then-effective TVP period to establish a new TVP. All terms and conditions, including termination liability, will apply to the new TVP period. (D)
(b) Select any then-effective ETTVP period to establish a new ETTVP. All terms and conditions, including termination liability, will apply to the new ETTVP period. (D)
(c) Discontinue ETTVP and convert service to a month-to-month payment plan. (T)

If the customer fails to notify the Telephone Company of its choice above prior to the expiration of its ETTVP period, the Telephone Company will notify the customer and continue two additional months of ETTVP billing. If the customer does not notify the Telephone Company of its choice above, in writing, within the first 60 days after the expiration date, billing will remain at the current threshold level and a new ETTVP period will begin based on the then-effective term and quantity commitment.

Service availability limited. Refer to # footnote on Page 5-118. (N)

© 2022 Frontier Communications Parent, Inc. All rights reserved.

5. SPECIAL ACCESS (Cont'd)

5.6 Rate Regulations (Cont'd)

5.6.14 DS1 Term Volume Plans (TVP)# (Cont'd)

(L) Options at Expiration (Cont'd)

Eight- and Ten-Year DS1 Term Volume Plans (ETTVP) (Cont'd)

At the expiration of a 10-year ETTVP period or extension period, ETTVP (C)
in-service SALs convert to a month-to-month payment plan. (C)

(D)

Service availability limited. Refer to # footnote on Page 5-118.

© 2022 Frontier Communications Parent, Inc. All rights reserved.

5. SPECIAL ACCESS (Cont'd)

5.6 Rate Regulations (Cont'd)

5.6.14 DS1 Term Volume Plans (TVP)# (Cont'd)

(M) Extension Options at Expiration

One-, Two-, Three-, Five-Year DS1 Term Volume Plans (TVP)

Extension is not an option with TVP. (D)

Eight- and Ten-Year DS1 Term Volume Plans (ETTVP) (D)

Extension is not an option with ETTVP. (C) (D)

Service availability limited. Refer to # footnote on Page 5-118.

© 2022 Frontier Communications Parent, Inc. All rights reserved.

FACILITIES FOR INTERSTATE ACCESS

5. SPECIAL ACCESS (Cont'd)

5.6 Rate Regulations (Cont'd)

5.6.14 DS1 Term Volume Plans (TVP)# (Cont'd) (T)

(N) Upgrades

(1) Upgrade to Higher Speed Service

One-, Two-, Three-, Five-Year DS1 Term Volume Plans (TVP)

The customer may upgrade service to a higher speed during a TVP period. The upgraded service will be subject to all appropriate NRCs.

If the following conditions exist, no termination liability will be applied for the decreased number of TVP SALs that are upgraded to a higher speed service:

- The customer must notify the Telephone Company in writing, in addition to the ASR.
- The higher speed service period must be equal to or longer in length than the time remaining under the TVP.
- The upgraded service remains connected at the same point(s) of termination.

When TVP DS1 SALs are upgraded to an Optical Networking arrangement, the number of DS1 SALs upgraded will remain in the quantity count for the purpose of determining the applicable threshold level rate.

Service availability limited. Refer to # footnote on Page 5-118. (N)

© 2022 Frontier Communications Parent, Inc. All rights reserved.

FACILITIES FOR INTERSTATE ACCESS

5. SPECIAL ACCESS (Cont'd)

5.6 Rate Regulations (Cont'd)

5.6.14 DS1 Term Volume Plans (TVP)# (Cont'd) (T)

(N) Upgrades (Cont'd)

(1) Upgrade to Higher Speed Service (Cont'd)

Eight- and Ten-Year DS1 Term Volume Plans (ETTVP) (Cont'd)

The customer may upgrade service to a higher speed during an ETTVP period. The upgraded service will be subject to all appropriate NRCs. To demonstrate that the service has been upgraded, the customer must provide the Telephone Company with order number information including the Purchase Order Number (PON) of the disconnected service and the PON of the related new connect within 30 days of the conversion, after the upgrade has been made. The orders must be placed at the same time with due dates within 60 days of each other.

If the following conditions exist, no termination liability will be applied for the decreased number of ETTVP SALs that are upgraded to a higher speed service:

- The customer must notify the Telephone Company in writing, in addition to the ASR.
- The higher speed service period must be equal to or greater in length than the time remaining under the ETTVP.
- The upgraded service remains connected at the same point(s) of termination.

When ETTVP DS1 SALs are upgraded to a DS3 arrangement or to an Optical Networking arrangement, the number of DS1 SALs upgraded will remain in the quantity count for the purpose of determining the applicable threshold level rate.

Service availability limited. Refer to # footnote on Page 5-118. (N)

© 2022 Frontier Communications Parent, Inc. All rights reserved.

FACILITIES FOR INTERSTATE ACCESS

5. SPECIAL ACCESS (Cont'd)

5.6 Rate Regulations (Cont'd)

5.6.14 DS1 Term Volume Plans (TVP)# (Cont'd) (T)
(N) Upgrades (Cont'd)

(2) Technology Migrations

For customers who subscribe to a DS1 TVP/ETTVP on or after December 2, 2010, or renew an expiring DS1 TVP/ETTVP on or after December 2, 2010, the DS1 TVP/ETTVP customer may disconnect a High Capacity Digital DS1 Service in order to replace such service with a Replacing Service pursuant to the Technology Migration regulations set forth in Section 2.10 preceding.

For customers who subscribed to a DS1 TVP/ETTVP prior to December 2, 2010, Section 5.6.14(N)(1) preceding includes replacements of service under a DS1 TVP/ETTVP with a Telephone Company provided Ethernet private line service or a Telephone Company provided switched Ethernet service of a higher speed. However, the customer may, at its option, replace service under a DS1 TVP/ETTVP with a Replacing Service pursuant to the Technology Migration regulations set forth in Section 2.10 preceding in lieu of Section 5.6.14(N)(1) preceding.

Service availability limited. Refer to # footnote on Page 5-118. (N)

© 2022 Frontier Communications Parent, Inc. All rights reserved.

FACILITIES FOR INTERSTATE ACCESS

5. SPECIAL ACCESS (Cont'd)

5.6 Rate Regulations (Cont'd)

5.6.14 DS1 Term Volume Plans (TVP)# (Cont'd) (T)

(O) Termination Liability

One-, Two-, Three-, Five-Year DS1 Term Volume Plans (TVP)

When a TVP arrangement is cancelled in its entirety prior to the end of the commitment period, termination liability charges, as set forth below, will apply based on the remainder of the TVP period in effect at the time of disconnect.

One Year TVP - 50% of any remaining portion of the first year's recurring charges.

Two Year TVP - 50% of any remaining portion of the first year's recurring charges. In addition, for any remaining portion of the second year, the customer will be liable for 5% of the total monthly recurring charges in that period.

Three Year TVP - 50% of any remaining portion of the first year's recurring charges. In addition, for any remaining portion of the second and third years, the customer will be liable for 10% of the total monthly recurring charges in that time period.

Five Year TVP - 50% of any remaining portion of the first year's recurring charges. In addition, for any remaining portion of the second through fifth years, the customer will be liable for 15% of the total monthly recurring charges in that time period.

Service availability limited. Refer to # footnote on Page 5-118. (N)

© 2022 Frontier Communications Parent, Inc. All rights reserved.

FACILITIES FOR INTERSTATE ACCESS

5. SPECIAL ACCESS (Cont'd)

5.6 Rate Regulations (Cont'd)

5.6.14 DS1 Term Volume Plans (TVP)# (Cont'd) (T)

(O) Termination Liability (Cont'd)

Eight- and Ten-Year DS1 Term Volume Plans (ETTVP)

When an ETTVP arrangement is cancelled in its entirety prior to the end of the commitment period, termination liability charges, as set forth below, will apply based on the remainder of the ETTVP period in effect at the time of disconnect. The termination liability charge applies in addition to any applicable minimum period charges.

Subject to any applicable TISC, the customer will be liable for one-hundred percent (100%) of any remaining DS1 SAL Monthly Recurring Charges (MRCs) in the first year of the ETTVP and for twenty-five percent (25%) of any remaining DS1 SAL MRCs for the balance of the commitment period.

For example, on an 8-year TVP with TISC of 5 years, the customer will be liable for 100% of any remaining DS1 SAL Monthly Recurring Charges (MRCs) for the sixth year recurring charges. In addition, for any remaining portion of the seventh and eighth years, the customer will be liable for 25% of the total monthly recurring charges in that time period.

When a 10-year ETTVP is cancelled in its entirety during an extension period, as described in 5.6.14(M) preceding, the customer will be liable for twenty-five percent (25%) of any remaining DS1 SAL Monthly Recurring Charges (MRCs) for the balance of the extension period.

Service availability limited. Refer to # footnote on Page 5-118. (N)

© 2022 Frontier Communications Parent, Inc. All rights reserved.

5. SPECIAL ACCESS (Cont'd)

5.6 Rate Regulations (Cont'd)

5.6.14 DS1 Term Volume Plans (TVP)# (Cont'd)

(P) Termination Without Liability

One-, Two-, Three-, Five-Year DS1 Term Volume Plans (TVP)

During a TVP period, should the currently effective rate for a customer's service increase, the customer may, at their option, terminate the TVP arrangement without penalty or liability, unless the increase is a result of FCC action.

A customer may cancel its TVP in order to subscribe its DS1 Services to the National Discount Plan as set forth in Section 23.1 following.

A customer may cancel its TVP if all of its DS1 Services under that TVP have been replaced with a Replacing Service pursuant to (N)(2) preceding.

Eight- and Ten-Year DS1 Term Volume Plans (ETTVP)

During an ETTVP period, should the currently effective rate for a customer's service increase, the customer may, at their option, terminate the ETTVP arrangement without penalty or liability, unless the increase is a result of FCC action.

If the in-service ETTVP DS1 SAL quantity (including any DS1 SALs that were replaced by a Replacing Service using the methodology for a Technology Migration specified in Section 2.10.2 preceding) falls below the minimum threshold level of 4000 in-service ETTVP SALs, the ETTVP is terminated without Termination Liability. (N)

Service availability limited. Refer to # footnote on Page 5-118.

© 2022 Frontier Communications Parent, Inc. All rights reserved.

FACILITIES FOR INTERSTATE ACCESS

5. SPECIAL ACCESS (Cont'd)

5.6 Rate Regulations (Cont'd)

5.6.15 E1 (2.048 Mbps) High Capacity Service# (T)

(A) Minimum Service Periods

E1 (2.048 Mbps) Service is offered under three minimum service periods, each with different rate levels. The minimum service periods are 1, 3 and 5 years. The customer must specify the minimum service period at the time the service is ordered.

The customer may select a longer minimum service period at any time, without penalty or application of nonrecurring charges, to obtain the lower monthly rate associated with a longer minimum service period. When the customer selects this option, he/she will receive full credit for the amount of time that the service was under the shorter minimum period. For example, if a customer ordered a one year minimum service period, then decided after six months to change to a three year minimum service period, the remaining obligation would be a period of 30 months. The new monthly recurring charges will apply beginning with the effective date of the new minimum service period.

(B) Expiration of Minimum Service Period

At the expiration of a minimum service period, the Telephone Company will continue to bill the customer for the same minimum service period rates unless the customer chooses to discontinue or converts to a different minimum service period.

When a customer retains E1 service(s) for the duration of a minimum service period, the termination liabilities expire. As long as the customer makes no physical changes to the configuration of service(s), the customer will no longer be liable for early termination discontinuance charges regardless of the minimum service period rate level.

(C) Discontinuance Without Liability - E1 Minimum Service Period

Should the recurring charges for a customer's E1 service increase, in aggregate, by more than 10% from the original recurring charges during the minimum service period, the customer may, at his/her option, terminate the E1 service without penalty or liability.

Effective November 21, 2017, new subscriptions to E1 (2.048 Mbps) High Capacity Service are no longer permitted. E1 (2.048 Mbps) High Capacity Service customers subscribed as of November 21, 2017 may continue with their existing subscriptions. If at any time an existing customer terminates E1 (2.048 Mbps) High Capacity Service, the customer may not re-subscribe to the plan.

© 2022 Frontier Communications Parent, Inc. All rights reserved.

FACILITIES FOR INTERSTATE ACCESS

5. SPECIAL ACCESS (Cont'd)

5.6 Rate Regulations (Cont'd)

5.6.15 E1 (2.048 Mbps) High Capacity Service# (Cont'd) (T)

(D) Discontinuance With Liability - E1 Minimum Service Period

When E1 service is discontinued prior to the end of the minimum service period, the customer will be liable for a percentage of the total monthly charges for the remaining portion of the minimum service period. This charge will be based on the rates in effect at the time of disconnect. The customer's total liability is dependent upon the number of months remaining within the year that the service is discontinued times the liability rate for that year plus the total monthly charges for each annual period remaining in the minimum service period times the applicable liability rate. The liability rates for each year of the minimum service period are as follows:

Year in Which Service Is Discontinued	Liability Rate
1	50%
2	35%
3	30%
4	25%
5	20%

For example, if a customer with a five year minimum service period discontinues E1 service after six months within the 4th year, the customer will be liable for 25% of the total monthly charges for six months, and 20% of the total monthly charges for the 5th year.

(E) Notification of Discontinuance

Notice of discontinuance must be given by the customer at least thirty days prior to actual discontinuance. Monthly charges will apply for a period of thirty days from the date the Telephone Company receives discontinuance notification or until the requested discontinuance date, whichever period is longer.

Service availability limited. Refer to # footnote on Page 5-141. (N)

© 2022 Frontier Communications Parent, Inc. All rights reserved.

5. SPECIAL ACCESS (Cont'd)

5.6 Rate Regulations (Cont'd)

5.6.16 MetroLAN Special Transport # ## (S)

(A) Description

MetroLAN Special Transport (MetroLAN) provides DS1 and FiberConnect transport between two or more serving wire centers located on a Telephone Company fiber optic ring. MetroLAN transport is provided at a flat-rate per month charge per DS1 or FiberConnect transport facility, per LAN traversed, regardless of the number of miles the circuit is routed on the fiber ring.

(B) Conversion of Existing DS1 Transport

Current DS1 and FiberConnect transport can be replaced by MetroLAN. For DS1 transport associated with a SAL provided under the One-, Two-, Three- and Five-Year DS1 Term Volume Plan (TVP), Eight- and Ten-Year DS1 Term Volume Plan (ETTVP) and FiberConnect Optional Payment Plan service, the MetroLAN term selected must be the same as the FiberConnect or DS1 SAL. Where access to MetroLAN is made via a multiplexing arrangement in a central office on the fiber ring (i.e., DS3 to DS1, or Voiceband to DS1), and there is no associated FiberConnect OPP or DS1 TVP SAL, then the MetroLAN One Year rate will apply. Customers with Month-to-Month DS1 SALs must convert to the One Year MetroLAN Rate.

(C) Term Commitment

When MetroLAN is ordered as part of new DS1 or FiberConnect service, the MetroLAN term must be the same as the term of the SAL portion of the DS1 TVP, DS1 ETTVP and FiberConnect service. Customers with Month-to- Month DS1 SALs must select the One Year MetroLAN term.

MetroLan Special Transport is reissued matter that was inadvertently omitted from the Interstate Service Guide and Pricelist No 14 during Detariff. The Effective Date of the reissued matter is November 30, 2018.

Effective November 21, 2017, new subscriptions to MetroLan Special Transport is no longer permitted. MetroLan Special Transport customers subscribed as of November 21, 2017 may continue with their existing subscriptions. If at any time an existing customer terminates MetroLan Special Transport, The customer may not re-subscribe to the plan.

© 2022 Frontier Communications Parent, Inc. All rights reserved.

FACILITIES FOR INTERSTATE ACCESS

5. SPECIAL ACCESS (Cont'd)

5.6 Rate Regulations (Cont'd)

5.6.16 MetroLAN Special Transport# ## (Cont'd)

(D) Discontinuance of Service

If a DS1 TVP SAL, DS1 ETTVP SAL or FiberConnect OPP SAL is discontinued, the MetroLAN portion of the circuit will also be discontinued. Termination liability charges will be assessed as in 5.6.12(F) for the SAL. No additional penalties will be assessed for the MetroLAN portion of the OPP circuit.

If a DS1 TVP SAL or DS1 ETTVP SAL is discontinued, the MetroLAN portion of the circuit will also be discontinued. Penalties for the discontinuance of TVP or ETTVP service will be assessed as in 5.6.14(N). No additional penalties will be assessed for the MetroLAN portion of the portion of the TVP or ETTVP circuit.

If a Month-to-Month DS1 SAL is discontinued, DS1 transport for the MetroLAN transport portion of the circuit is also discontinued.

MetroLAN transport may be converted to standard special access transport rates (i.e., per airline mile) at any time at no charge.

(E) Continuation of Service Off the Ring

MetroLAN DS1 and FiberConnect circuits can be routed any distance on a fiber optic ring. When the DS1 or FiberConnect circuit leaves the ring for continuation on the network, normal tariff rates will be assessed for the portion of the route not on the ring.

(F) Renewal Option

When the MetroLAN term expires, the customer can renew for any term length as long as the new MetroLAN term selected is the same as the SAL portion of the DS1 or FiberConnect service (One Year option for DS1 Month- to-Month services). The SAL and MetroLAN must have the same term for new or renewed DS1 or FiberConnect service.

Reissued Matter. Refer to ## footnote on Page 5-143
Service availability limited. Refer to # footnote on Page 5-143.

© 2022 Frontier Communications Parent, Inc. All rights reserved.

FACILITIES FOR INTERSTATE ACCESS

5. SPECIAL ACCESS (Cont'd)

5.6 Rate Regulations (Cont'd)

5.6.16 MetroLAN Special Transport# ##(Cont'd)

(G) Rate Changes

A decrease in the MetroLAN monthly recurring charge will be passed on to subscribers of the plan. During a MetroLAN period, should the currently effective rate for a customer's service increase, the customer may, at their option, terminate the MetroLAN arrangement without penalty or liability unless the increase is a result of FCC action.

(H) Service Availability

MetroLAN DS1 and FiberConnect transport is available to all DS1 and FiberConnect customers in the Telephone Company serving areas in which fiber optic rings are deployed. MetroLAN is provided between wire centers located on the same fiber optic ring as follows:

MetroLAN Name - San Bernardino

State	CLLI	Wire Center	Contiguous Metro LAN
CA	BUMTCAXF	BEAUMONT	
CA	CCMNCAXF	CUCAMONGA	
CA	ETWNCAXF	ETIWANDA	
CA	LMLNCAXF	LOMA LINDA	
CA	MENTCAXF	MENTONE	
CA	MSCYCAXF	MUSCOY	
CA	ONTRCAXF	ONTARIO	Ontario
CA	RDLDCAXF	REDLANDS	
CA	SNBRCAXH	MARSHALL	
CA	SNBRCAXK	SAN BERNARDINO	
CA	UPLDCAXF	UPLAND	Ontario
CA	YUCPCAXF	YUCAIPA	

Reissued Matter. Refer to ## footnote on Page 5-143

Service availability limited. Refer to # footnote on Page 5-143.

© 2022 Frontier Communications Parent, Inc. All rights reserved.

FACILITIES FOR INTERSTATE ACCESS

5. SPECIAL ACCESS (Cont'd)

5.6 Rate Regulations (Cont'd)

5.6.16 MetroLAN Special Transport# ##(Cont'd)

(H) Service Availability (Cont'd)

MetroLAN Name - Ontario

State	CLLI	Wire Center	Contiguous Metro LAN
CA	AZUSCAXF	AZUSA	
CA	BLPKCAXF	BALDWIN PARK	
CA	CHNOCAXF	CHINO	
CA	CLMTCAXF	CLAREMONT	
CA	COVNCAXF	COVINA	
CA	DMBRCAXF	DIAMOND BAR	
CA	GLNDCAXF	GLENDORA	
CA	LAPNCAXF	ROWLAND	
CA	LAPNCAXG	LA PUENTE	Bellflower/Whittier
CA	LAPNCAXL	MAPLEGROVE	
CA	LSSRCAXF	LOS SERRANOS	
CA	LVRNCAXF	LA VERNE	
CA	MNRVCAXG	MONROVIA	
CA	ONTRCAXF	ONTARIO	San Bernardino
CA	ONTRCAXG	ONTARIO SOUTH	
CA	ONTRCAXP	ONTARIO	
CA	POMNCAXF	POMONA	
CA	PSDNCAXF	HASTINGS/PASADENA	
CA	SNDMCAXF	SAN DIMAS	
CA	SRMDCAXF	SIERRA MADRE	
CA	UPLDCAXF	UPLAND	San Bernardino
CA	WLNTCAXF	WALNUT	

Reissued Matter. Refer to ## footnote on Page 5-143

Service availability limited. Refer to # footnote on Page 5-143.

© 2022 Frontier Communications Parent, Inc. All rights reserved.

FACILITIES FOR INTERSTATE ACCESS

5. SPECIAL ACCESS (Cont'd)

5.6 Rate Regulations (Cont'd)

5.6.16 MetroLAN Special Transport# (Cont'd)

(H) Service Availability (Cont'd)

MetroLAN Name - BELLFLOWER/WHITTIER

State	CLLI	Wire Center	Contiguous Metro LAN
CA	ARTSCAXF	ARTESIA	Long Beach
CA	BLFLCAXF	BELLFLOWER	
CA	BLGRCAXF	FLORENCE	
CA	DWNYCAXF	DOWNEY	
CA	DWNYCAXG	IMPERIAL	
CA	LAHBCAXF	LA HABRA	
CA	LAPNCAXG	LA PUENTE	Ontario
CA	LNBHCAXS	LAKEWOOD UPT/ STADIUM	Long Beach
CA	NRWLCAXF	NORWALK	
CA	NRWLCAXG	ALONDRA	
CA	PCRVCAXF	RIO HONDO	
CA	WHTRCAXF	WHITTIER SOUTH	
CA	WHTRCAXG	WHITWOOD	
CA	WHTRCAXH	VALLEY VIEW	
CA	WHTRCAXJ	PICO	

Reissued Matter. Refer to ## footnote on Page 5-143

Service availability limited. Refer to # footnote on Page 5-143.

© 2022 Frontier Communications Parent, Inc. All rights reserved.

FACILITIES FOR INTERSTATE ACCESS

5. SPECIAL ACCESS (Cont'd)

5.6 Rate Regulations (Cont'd)

5.6.16 MetroLAN Special Transport# (Cont'd)

(H) Service Availability (Cont'd)

MetroLAN Name – Long Beach

State	CLLI	Wire Center	Contiguous Metro LAN
CA	ARTSCAXF	ARTESIA	Bellflower/Whittier
CA	CLCYCAXG	MAR VISTA	Santa Monica
CA	HRBHCAXA	REDONDO BEACH	
CA	HNBHCAXF	SLATER	
CA	HNBHCAXG	HUNTINGTON BEACH	
CA	HNBHCAXH	BUSHARD	
CA	HNBHCAXL	WARNER	
CA	LNBHCAXF	LONG BEACH MAIN	
CA	LNBHCAXG	UPTOWN	
CA	LNBHCAXH	MARKET	
CA	LNBHCAXL	MARTIN L. KING	
CA	LNBHCAXM	CLARK	
CA	LNBHCAXP	LONG BEACH	
CA	LNBHCAXS	LAKEWOOD UPT/ STADIUM	Bellflower/Whittier
CA	LNBHCAXT	TERMINO	
CA	MNBHCAXF	MANHATTAN BEACH	
CA	PDRYCAXF	PLAYA DEL REY	Santa Monica CA
	RDBHCAXF	EL NIDO	
CA	RLHLCAXF	ROLLING HILLS	
CA	SLBHCAXF	SEAL BEACH	
CA	TRNCCAXF	ALAMITOS/DEL AMO	
CA	TRNCCAXG	PALOS VERDES	
CA	WMNSCAXF	WESTMINSTER	

Reissued Matter. Refer to ## footnote on Page 5-143

Service availability limited. Refer to # footnote on Page 5-143.

© 2022 Frontier Communications Parent, Inc. All rights reserved.

FACILITIES FOR INTERSTATE ACCESS

5. SPECIAL ACCESS (Cont'd)

5.6 Rate Regulations (Cont'd)

5.6.16 MetroLAN Special Transport# (Cont'd)

(H) Service Availability (Cont'd)

MetroLAN Name - SANTA MONICA/WEST LA

State	CLLI	Wire Center	Contiguous Metro LAN
CA	BELRCAXF	BEL AIR	
CA	CLCYCAXG	MAR VISTA	Long Beach
CA	GRHLCAXF	GRANADA HILLS	
CA	PACMCAXF	PACOIMA	
CA	PCPLCAXF	PACIFIC PALISADES	
CA	PDRYCAXF	PLAYA DEL REY	Long Beach
CA	SNFNCAXG	SAN FERNANDO	
CA	SNLDCAXF	SUNLAND/TUJUNGA	
CA	SNMNCAXG	SANTA MONICA	
CA	SNMNCAXJ	SUNSET	
CA	SNMNCAXP	SANTA MONICA	
CA	SPLVCAXF	SEPULVEDA	
CA	SYLMCAXF	SYLMAR	
CA	TPNGCAXF	TOPANGA	Thousand Oaks
CA	WLANCAXF	WEST LOS ANGELES	
CA	WLANCAXG	WESTWOOD	
CA	WLANCAXH	BUNDY SM	
CA	WLANCAXH	BUNDY WLA	
CA	WLANCAXJ	UNIVERSITY	

Reissued Matter. Refer to ## footnote on Page 5-143

Service availability limited. Refer to # footnote on Page 5-143.

© 2022 Frontier Communications Parent, Inc. All rights reserved.

5. SPECIAL ACCESS (Cont'd)

5.6 Rate Regulations (Cont'd)

5.6.16 MetroLAN Special Transport# (Cont'd)

(H) Service Availability (Cont'd)

MetroLAN Name – THOUSAND OAKS

State	CLLI	Wire Center	Contiguous Metro LAN
CA	CMRLCAXF	CAMARILLO	
CA	ELRICAXF	EL RIO	
CA	MUGUCAXF	MUGU	
CA	NWPKCAXF	NEWBURY PARK	
CA	OXNRCAXF	OXNARD	
CA	OXNRCAXG	MANTILLA	
CA	SNPLCAXF	SANTA PAULA	
CA	THOKCAXF	THOUSAND OAKS	
CA	THOKCAXH	CONEJO	
CA	TPNGCAXF	TOPANGA	Santa Monica

MetroLAN Name – SANTA BARBARA

CA	CRPRCAXF	CARPINTERIA	
CA	ELWDCAXF	ELLWOOD	
CA	GOLTCAXF	GOLETA	
CA	MNTTCAXF	MONTECITO	
CA	SLVNCAXG	SANTA YNEZ	Lompoc/Santa Maria
CA	SNBBCAXF	SANTA BARBARA	
CA	SNBBCAXG	LAS POSITAS	

MetroLAN Name – LOMPOC/SANTA MARIA

CA	LMPCCAXF	LOMPOC	
CA	LMPCCAXG	MESA	
CA	ORCTCAXG	BRADLEY	
CA	SLVNCAXG	SANTA YNEZ	Santa Maria/ Santa Barbara
CA	SNTMCAXF	SANTA MARIA	
CA	SURFCAXF	SURF	

Reissued Matter. Refer to ## footnote on Page 5-143

Service availability limited. Refer to # footnote on Page 5-143.

© 2022 Frontier Communications Parent, Inc. All rights reserved.

FACILITIES FOR INTERSTATE ACCESS

5. SPECIAL ACCESS (Cont'd)

5.6 Rate Regulations (Cont'd)

5.6.16 MetroLAN Special Transport# (Cont'd)

(H) Service Availability (Cont'd)

MetroLAN Name – PASCO

State	CLLI	Wire Center	Contiguous Metro LAN
FL	HDSNFLXA	HUDSON MAIN	
FL	LNLKFLXA	LAND O' LAKES	
FL	MNLKFLXA	MOON LAKE	
FL	NPRCFLXA	NEW PORT RICHEY	
FL	OLDSFLXA	OLDSMAR	Hillsborough
FL	SNSPFLXA	SEVEN SPRINGS	
FL	STGRFLXA	ST. GEORGE	St. Pete/Clearwater
FL	TRSPFLXA	TARPON SPRINGS MAIN	

MetroLAN Name – ST. PETERSBURG/CLEARWATER

FL	BAYUFLXA	BAYOU	
FL	CLWRFLXA	CLEARWATER MAIN	
FL	CNSDFLXA	COUNTRYSIDE	
FL	DNDNFLXA	DUNEDIN	
FL	FHSDFLXA	FEATHER SOUND	Hillsboroug
FL	GNDYFLXA	GANDY	
FL	INRKFLXX	INDIAN ROCKS	
FL	LLMNFLXA	LEALMAN	
FL	LRGOFLXA	LARGO	
FL	NGBHFLXA	NORTH GULF BEACH	
FL	PNLSFLXA	PINELLAS	
FL	PSDNFLXA	PASADENA	
FL	SGBEFLXA	SOUTH GULF BEACH	
FL	SKWYFLXA	SKYWAY	
FL	SPBGFLXA	ST. PETERSBURG MAIN	
FL	SPBGFLXS	ST. PETERSBURG SOUTH	
FL	STGRFLXA	ST. GEORGE	Pasco

Reissued Matter. Refer to ## footnote on Page 5-143

Service availability limited. Refer to # footnote on Page 5-143.

© 2022 Frontier Communications Parent, Inc. All rights reserved.

FACILITIES FOR INTERSTATE ACCESS

5. SPECIAL ACCESS (Cont'd)

5.6 Rate Regulations (Cont'd)

5.6.16 MetroLAN Special Transport# (Cont'd)

(H) Service Availability (Cont'd)

MetroLAN Name - HILLSBOROUGH

State	CLLI	Wire Center	Contiguous Metro LAN
FL	BHPKFLXA	BEACH PARK	
FL	BRNDFLXA	BRANDON	Polk/Wimauma
FL	BYSHFLXA	BAY SHORE	
FL	CRWDFLXA	CARROLLWOOD	
FL	FHSDFLXA	FEATHER SOUND	St. Pete/Clearwater FL
	HYPKFLXA	HYDE PARK	
FL	KYSTFLXA	KEYSTONE	
FL	LUTZFLXA	LUTZ	
FL	OLDSFLXA	OLDSMAR	Pasco
FL	SLSPFLXA	SULPHUR SPRINGS	
FL	SMNLFLXA	SEMINOLE	
FL	SWTHFLXA	SWEETWATER	
FL	TAMPFLXE	TAMPA EAST	Wimauma
FL	TAMPFLXA	TAMPA-MAIN	
FL	TAMPFLXX	TAMPA MAIN	
FL	TMTRFLXA	TEMPLE TERRACE	
FL	UNVRFLXA	UNIVERSITY	
FL	WLCHFLXA	WESLEY CHAPEL	
FL	WLCRFLXA	WALLCRAFT	
FL	WSSDFLXA	WESTSIDE	
FL	YBCTFLXA	YBOR	

Reissued Matter. Refer to ## footnote on Page 5-143

Service availability limited. Refer to # footnote on Page 5-143.

© 2022 Frontier Communications Parent, Inc. All rights reserved.

FACILITIES FOR INTERSTATE ACCESS

5. SPECIAL ACCESS (Cont'd)

5.6 Rate Regulations (Cont'd)

5.6.16 MetroLAN Special Transport# (Cont'd)

(H) Service Availability (Cont'd)

MetroLAN Name – POLK

State	CLLI	Wire Center	Contiguous Metro LAN
FL	ABDLFLXA	AUBURNDALE	
FL	BARTFLXA	BARTOW MAIN	
FL	BRNDFLXA	BRANDON	Hillsborough/ Wimauma
FL	CYGRFLXA	CYPRESS GARDENS	
FL	HGLDFLXA	HIGHLANDS	
FL	LKALFLXA	LAKE ALFRED	
FL	LKLDFLXA	LAKELAND MAIN	
FL	LKLDFLXE	LAKELAND EAST	
FL	LKLDFLXN	LAKELAND NORTH	
FL	MLBYFLXA	MULBERRY	
FL	PTCYFLXA	PLANT CITY MAIN	
FL	PKCYFLXA	POLK CITY	
FL	WNHNFLXC	WINTER HAVEN MAIN	
FL	ZPHYFLXA	ZEPHYRHILLS	

MetroLAN Name – WIMAUMA

FL	ALFAFLXA	ALAFIA	
FL	BRNDFLXA	BRANDON	Hillsborough/Polk
FL	PLMTFLXA	PALMETTO MAIN	Sarasota/Bradenton
FL	PRSHFLXA	PARRISH	
FL	RSKNFLXA	RUSKIN	
FL	TAMPFLXE	TAMPA EAST	Hillsborough
FL	WIMMFLXA	WIMAUMA	

Reissued Matter. Refer to ## footnote on Page 5-143

Service availability limited. Refer to # footnote on Page 5-143.

© 2022 Frontier Communications Parent, Inc. All rights reserved.

FACILITIES FOR INTERSTATE ACCESS

5. SPECIAL ACCESS (Cont'd)

5.6 Rate Regulations (Cont'd)

5.6.16 MetroLAN Special Transport# (Cont'd)

H) Service Availability (Cont'd)

MetroLAN Name – SARASOTA/BRADENTON

State	CLLI	Wire Center	Contiguous Metro LAN
FL	BRBAFLXA	BRADENTON BAY	
FL	BRTNFLXX	BRADENTON MAIN	
FL	NRSDFLXA	NORTHSIDE	
FL	OSPRFLXA	OSPREY	
FL	PLMTFLXA	PALMETTO MAIN	Wimauma
FL	SEKYFLXA	SIESTA KEY	
FL	SPRGFLXA	SARASOTA SPRINGS	
FL	SRSTFLXA	SARASOTA MAIN	
FL	SSDSFLXA	SOUTHSIDE	
FL	VENCFLXA	VENICE MAIN	
FL	VENCFLXS	VENICE SOUTH	

MetroLAN Name – PLANO

TX	CRTNTXXC	CARROLLTON NORTHEAST	Carrollton/Lewisville
TX	GRLDTXXA	GARLAND – MAIN	
TX	GRLDTXXB	GARLAND – SOUTH	
TX	GRLDTXXC	GARLAND – NORTH	
TX	GRLDTXXE	GARLAND – SOUTHEAST	
TX	PLANTXXA	PLANO MAIN	
TX	PLANTXXB	PLANO WEST	
TX	PLANTXXD	PLANO – NORTHWEST	Carrollton/Lewisville
TX	PLANTXXF	PLANO – CROSSCREEK	
TX	PLANTXXK	PLANO – NORTHWEST	Carrollton/Lewisville
TX	RWLTTXXA	ROWLETT	
TX	WYLITXXA	WYLIE	

Reissued Matter. Refer to ## footnote on Page 5-143

Service availability limited. Refer to # footnote on Page 5-143.

© 2022 Frontier Communications Parent, Inc. All rights reserved.

FACILITIES FOR INTERSTATE ACCESS

5. SPECIAL ACCESS (Cont'd)

5.6 Rate Regulations (Cont'd)

5.6.16 MetroLAN Special Transport# (Cont'd)

(H) Service Availability (Cont'd)

MetroLAN Name – CARROLLTON/LEWISVILLE

State	CLLI	Wire Center	Contiguous Metro LAN
TX	ARGYTXXB	ARGYLE	
TX	CRTNTXXA	CARROLLTON MAIN	
TX	CRTNTXXB	CARROLLTON NORTH	
TX	CRTNTXXC	CARROLLTON NORTHEAST	Plano
TX	CRTNTXXD	CARROLLTON SOUTHEAST	
TX	DNTNTXXA	DENTON	
TX	GRPVTXXA	GRAPEVINE	Irving
TX	LWVLTXXA	LEWISVILLE MAIN	
TX	LWVLTXXB	LEWISVILLE SOUTH	Irving
TX	LWVLTXXC	LEWISVILLE WEST	
TX	LWVLTXXE	LEWISVILLE ROUND GROVE	
TX	PLANTXXD	PLANO NORTHWEST	Plano

Reissued Matter. Refer to ## footnote on Page 5-143

Service availability limited. Refer to # footnote on Page 5-143.

© 2022 Frontier Communications Parent, Inc. All rights reserved.

FACILITIES FOR INTERSTATE ACCESS

5. SPECIAL ACCESS (Cont'd)

5.6 Rate Regulations (Cont'd)

5.6.16 MetroLAN Special Transport# ##(Cont'd)

(H) Service Availability (Cont'd)

MetroLAN Name –IRVING

State	CLLI	Wire Center	Contiguous Metro LAN
TX	DFIATXXA	DALLAS/ FT. WORTH AIRPORT	
TX	GRPVTXXA	GRAPEVINE	Carrollton/Lewisville
TX	IRNGTXXA	IRVING WEST	
TX	IRNGTXXB	IRVING MAIN	
TX	IRNGTXXC	IRVING EAST	
TX	IRNGTXXD	IRVING SOUTHWEST	
TX	IRNGTXXE	IRVING NORTH	
TX	IRNGTXXF	IRVING WOODBINE	
TX	IRNGTXXG	IRVING WALNUT HILL	
TX	LWVLTXXB	LEWISVILLE SOUTH	Carrollton/Lewisville

MetroLAN Name – BRYAN-COLLEGE STATION

TX	BRYNTXXA	BRYAN MAIN
TX	BRYNTXXB	BRYAN LAKEVIEW
TX	BRYNTXXC	BRYAN STEEP HOLLOW
TX	CLSTTXXA	COLLEGE STATION MAIN
TX	CLSTTXXB	COLLEGE STATION POST OAK WYLIE

Reissued Matter. Refer to ## footnote on Page 5-143

Service availability limited. Refer to # footnote on Page 5-143.

© 2022 Frontier Communications Parent, Inc. All rights reserved.

FACILITIES FOR INTERSTATE ACCESS

5. SPECIAL ACCESS (Cont'd)

5.6 Rate Regulations (Cont'd)

5.6.16 MetroLAN Special Transport# (Cont'd)

(H) Service Availability (Cont'd)

MetroLAN Name – SAN ANGELO

State	CLLI	Wire Center	Contiguous Metro LAN
TX	SANGTXXA	SAN ANGELO MAIN	
TX	SANGTXXB	SAN ANGELO WEST	
TX	SANGTXXG	SAN ANGELO SOUTHEAST	

MetroLAN Name –BAYTOWN

TX	BHCYTXXA	BEACH CITY
TX	BYTWTXXA	BAYTOWN MAIN
TX	BYTWTXXB	BAYTOWN WEST
TX	BYTWTXXC	BAYTOWN NORTH
TX	HFMNTXXA	HUFFMAN
TX	MTBLTXXA	MONT BELVIEU

Reissued Matter. Refer to ## footnote on Page 5-143

Service availability limited. Refer to # footnote on Page 5-143.

© 2022 Frontier Communications Parent, Inc. All rights reserved.

5. SPECIAL ACCESS (Cont'd)

5.6 Rate Regulations (Cont'd)

5.6.17 High Voltage Protection

(A) Description (Cont'd)

High Voltage Protection Service is used at customer locations that may require special equipment to isolate or neutralize Ground Potential Rise (GPR) and/or induced voltage caused by faults in the electric power system. GPR is a voltage difference between two or more ground electrodes caused by earth return currents. GPR on cable facilities can occur, for example, when current from lightning surges flow to ground, but GPR often is associated with voltage generated as the power system fault currents flow to ground. Maximum GPR is developed by the percentage of line-to-ground fault current entering earth through electrode impedance.

This feature will provide high voltage isolation for Special Access telecommunications, while enabling the normal transmission between the Telephone Company wire center and the equipment at the customer's location during GPR environment due to electrical power faults.

(B) Provisioning

The Telephone Company shall determine the proper levels of protection required on its network to isolate or neutralize electrical hazard, based on the information provided by the customer. The customer shall provide the Telephone Company, in writing, the technical data necessary for the Telephone Company to determine the high voltage protection requirements, at the time of application for the initial service, additions to, or changes in the existing service. In addition, the customer shall notify the Telephone Company before making changes in the electric supply that will increase the GPR at the location.

The technical data for the customer's location shall include, but not be limited to, the following:

- ground grid area in square feet
- ground gird impedance in ohms
- X/R ratio at worst case fault location
- GPR in volts MS

© 2022 Frontier Communications Parent, Inc. All rights reserved.

5. SPECIAL ACCESS (Cont'd)

5.6 Rate Regulations (Cont'd)

5.6.17 High Voltage Protection (Cont'd)

(B) Provisioning (Cont'd)

Based on the customer's technical data provided to the Telephone Company, the Telephone Company will provide the necessary high voltage protection equipment at the Telephone Company's demarcation point on the customer's premises and at the remote drainage location. The placement of the equipment by the Telephone Company shall in no way release the customer of its responsibility for damage, loss or claims caused by electrical hazards resulting from the customer's electric power system. The Telephone Company's liability for damage, loss or claims is set forth under 2.1.3.

The customer may elect to furnish the equipment at its premises to isolate or enutralize the electrical hazard subject to the approval of the Telephone Company; however, such approval by the Telephone Company shall not relieve the customer of its responsibility to install or maintain adequate high voltage equipment. The high voltage protection equipment at the customer's location will be exclusively owned either by the Telephone Company or by the customer.

When the customer provides the high voltage equipment at its premise, the Telephone Company will provide the necessary high voltage equipment at the wire center and remote drainage location. The Telephone Company will be responsible up to and including the network interface for the termination of Special Access Services regardless of ownership of the high voltage protection equipment.

The Telephone Company will inspect and verify adequacy of the high voltage protection equipment when service is established and at such future times as deemed necessary due to additions, deletions, rearrangements, routine maintenance or for the purpose of verifying the adequacy of the high voltage protection equipment.

© 2022 Frontier Communications Parent, Inc. All rights reserved.

5. SPECIAL ACCESS (Cont'd)

5.6 Rate Regulations (Cont'd)

5.6.17 High Voltage Protection (Cont'd)

(C) Claims and Demands for Damage

In addition to the provisions in Section 2.3.11, the customer shall defend, indemnify and save harmless the Telephone Company from any and all loss, claims, demands, suits or other action or any liability whatsoever, whether suffered, made, instituted or asserted by the customer or by any other party or person, for any personal injury to or death of any person or persons, or for any loss, damage or destruction of any property whether owned by the customer or others, caused or claimed to have been caused directly or indirectly by the installation, operation, failure to operate, maintenance, removal, presence, condition, location or use of such equipment and services associated with high voltage protection equipment furnished by the Telephone Company or with customer equipment when combined or connected with facilities of the Telephone Company.

Services provided by the Telephone Company shall not cause the Telephone Company to become responsible for damage, loss or claims caused by electrical hazards resulting from a customer's electric power system.

(D) Network Outage

Interruptions or outages of services provided to customers may occur for reasons, such as facility damage due to storm loading, vehicle accident, lightning strike, or other acts of God. Circuit failures caused by such events cannot be prevented by services provided in accordance with this service (however, interruptions and service outages due to fault-produced ground potential rise and induction can be minimized). The Telephone Company expressly states that provision of the high voltage equipment cannot prevent such service outages as may normally occur due to the proceeding circumstances. It is the responsibility of the customer to provide sufficient protection to prevent damage caused by such events.

Interruptions or outages due to the effects (GPR and/or induction) of faults in the customer's power generating, transmission and/or distribution system are minimized through the installation and maintenance of high voltage protection equipment which is designed to operate in a fault-produced electrical environment.

© 2022 Frontier Communications Parent, Inc. All rights reserved.

5. SPECIAL ACCESS (Cont'd)

5.6 Rate Regulations (Cont'd)

5.6.17 High Voltage Protection (Cont'd)

(E) Compliance Statement

If the Telephone Company has provided service where high voltage protection is necessary, by the customer or the customer-provided equipment is nonfunctional or inadequate or the customer fails, upon written notice, to establish or reestablish the required high voltage protection equipment or apply for and obtain such protection from the Telephone Company, or keep the Telephone Company informed of changed high voltage requirements, then the Telephone Company will disconnect service 120 days after giving the notice required, as set forth under Section 2.1.8(A).

(F) Rate Regulations

(1) Minimum Period

The minimum period for High Voltage Protection is one month.

(2) Rate Elements

(a) Initial Common Equipment

A nonrecurring charge and a monthly rate apply for the initial common (basic) equipment used for the physical connection to the network interface. The Initial Common Equipment can accommodate up to eight Special Access facility terminations at a customer's location.

(b) High Voltage Terminating Equipment

High Voltage Terminating Equipment is required for each Special Access facility termination. A nonrecurring charge and a monthly rate for the High Voltage Terminating Equipment apply in addition to the rates and charges for the Special Access facility as well as the associated Special Access Service regulations.

5.6.18 Reserved for Future Use

© 2022 Frontier Communications Parent, Inc. All rights reserved.

5. SPECIAL ACCESS (Cont'd)

5.6 Rate Regulations (Cont'd)

5.6.19 DS3 Term Volume Plan #(Cont'd)

(A) Description

(1) The DS3 Term Volume Plan (DS3 TVP) provides a customer with discounted monthly recurring rates for DS3 Special Access Line (SAL) rate elements based upon a term commitment and a committed number of DS3 SALs (DS3 Commitment Quantity). The DS3 Commitment Quantity represents the total number of DS3 SALs that the customer commits to the DS3 TVP, regardless of the total number of DS3 SALs that the customer currently has in-service in the operating territories of this Guide. Only one DS3 Commitment Quantity is allowed for the DS3 TVP. The DS3 Commitment Quantity (along with the Term Commitment as defined in (A)(2) following) determines the Commitment Level and corresponding rates applicable to the DS3 SALs included in the TVP. Commitment Levels are described in (C) following (Commitment Level).

(2) The DS3 TVP is offered for a 3, 5, or 7 year term commitment period (Term Commitment). Upon subscription to the DS3 TVP, the customer must issue ASRs to add DS3 SALs to the TVP and/or convert existing SALs (billed Month to Month and/or under other term pricing plans) to the DS3 TVP such that the number of in-plan DS3 SALs is at least DS3 Commitment Quantity. All of the customer's in-plan DS3 SALS will be billed at the applicable DS3 TVP rate level. The applicable DS3 TVP rate level corresponds to the length of the Term Commitment selected by the customer and a Commitment Level as determined by the DS3 Commitment Quantity. For example, if a customer commits 51 DS3 circuits to a 3 year Term Commitment under this DS3 TVP, but has a total of 150 DS3 circuits in-plan, the customer will receive a rate corresponding to a Term Commitment of 3 years for a Commitment Level of 50-149 DS3 circuits for all 150 DS3 circuits.

Effective November 21, 2017, new subscriptions to DS3 TVP are no longer permitted. DS3 TVP customers subscribed as of November 21, 2017 may continue with their existing subscriptions. If at any time an existing customer terminates its DS3 TVP, the customer may not re-subscribe to the plan.

© 2022 Frontier Communications Parent, Inc. All rights reserved.

5. SPECIAL ACCESS (Cont'd)

5.6 Rate Regulations (Cont'd)

5.6.19 DS3 Term Volume Plan# (Cont'd)

(A) Description (Cont'd)

(3) During the DS3 TVP term, the customer may elect to increase the DS3 Commitment Quantity in accordance with (G) following, the Term Commitment in accordance with (H) following, or both.

(4) The regulations and rates set forth in this Section 5.6.19 apply only to the DS3 SAL rate elements for Eligible DS3 Services, as defined in (D)(1) following, under a DS3 TVP. All other rate elements or additional features associated with the service are provided at the rates and regulations set forth elsewhere in this Guide as they may apply to those associated rate elements or additional features.

(5) A customer may not concurrently subscribe the same DS3 Services to both the DS3 TVP and the National Discount Plan as set forth in Section 23.1 following.

(B) DS3 TVP Enrollment and Conversion of DS3 Services

(1) A customer wishing to subscribe to a DS3 TVP must submit a written request to the Telephone Company. The written request must be submitted in a manner designated by the Telephone Company, and must include all of the following.

(a) The enrollment date for the DS3 TVP. This is the date on which DS3 TVP rates will commence and serves as the anniversary date for the DS3 TVP for the purpose of administering the Annual Review described in (E) following. The enrollment date must be within thirty (30) calendar days of the Telephone Company receiving the customer's written subscription to DS3 TVP.

(b) The DS3 Commitment Quantity for the DS3 TVP. The DS3 Commitment Quantity shall be the number of DS3 SALs that the customer includes in the DS3 TVP and shall correspond to a Commitment Level as described in (C) following. In order to subscribe to DS3 TVP, a minimum of twenty (20) DS3 SALs must be committed to the DS3 TVP.

Service availability limited. Refer to # footnote on Page 5-162.

© 2022 Frontier Communications Parent, Inc. All rights reserved.

FACILITIES FOR INTERSTATE ACCESS

5. SPECIAL ACCESS (Cont'd)

5.6 Rate Regulations (Cont'd)

5.6.19 DS3 Term Volume Plan# (Cont'd)

(B) DS3 TVP Enrollment and Conversion of DS3 Services (Cont'd)

(1) (Cont'd)

(c) The Term Commitment for the DS3 TVP. Term Commitment periods of 3-years, 5-years, or 7-years are offered.

(d) The Access Customer Name Abbreviations (ACNAs) to include in the DS3 TVP. Customer must own or have the right to utilize all the ACNAs subscribed to this DS3 TVP, and must otherwise comply with the terms and conditions of this Guide. Subsequent to initial subscription, additional ACNA(s) may be included in the DS3 TVP so long as the customer complies with the terms and conditions set forth in this Guide. Such requests must be made in the same manner and by providing the same information required for initial subscription under this (B) (1). The DS3 Commitment Quantity and the resulting Commitment Level must be increased to include the additional SALs associated with the addition of any ACNA(s). The increased Commitment Level will apply through the end of the Term Commitment. No adjustment to prior billing will be made, and no credits will be given based on the new Commitment Level as set forth in (G) following.

(e) Request for Time-in-Service Credit (TISC). TISC is described in (K) (2) following. TISC must be requested by the customer in writing and agreed to by the Telephone Company prior to the enrollment date of the DS3 TVP. The customer must request TISC in its initial subscription under this (B) (1) and the request must include all of the information specified in (K) (2) following. No requests for TISC will be accepted after the enrollment date of the DS3 TVP.

Service availability limited. Refer to # footnote on Page 5-162.

© 2022 Frontier Communications Parent, Inc. All rights reserved.

FACILITIES FOR INTERSTATE ACCESS

5. SPECIAL ACCESS (Cont'd)

5.6 Rate Regulations (Cont'd)

5.6.19 DS3 Term Volume Plan# (Cont'd) (T)

(B) DS3 TVP Enrollment and Conversion of DS3 Services (Cont'd)

(2) When an Eligible DS3 Service (as described in (D)(1) following) under a term plan is discontinued in order to include the DS3 SAL in the DS3 TVP, no termination penalty will apply for early termination of that DS3 Service. TISC under (K)(2) following may be available for the time that the DS3 SAL was under a term plan prior to conversion to the DS3 TVP.

(3) Where there is no service interruption, billing interruption or other changes to an existing service being converted to the DS3 TVP, nonrecurring charges do not apply for the conversion.

(4) If the customer converts a service that is not an Eligible DS3 Service, as defined in (D)(1) following, (such as DS3 Unlimited System) to a service that is an Eligible DS3 Service, as defined in (D)(1) following, such conversion will be treated as a disconnection of the existing service and installation of a new service and all applicable charges, terms and conditions will apply. The new TVP eligible service will be included in the in-service quantity count as of the order completion date for the conversion, and the applicable DS3 TVP rates will apply as of that date.

Service availability limited. Refer to # footnote on Page 5-162. (N)

© 2022 Frontier Communications Parent, Inc. All rights reserved.

5. SPECIAL ACCESS (Cont'd)

5.6 Rate Regulations (Cont'd)

5.6.19 DS3 Term Volume Plan# (Cont'd) (T)

(C) Commitment Levels

The DS3 Commitment Quantity as specified by the customer determines the Commitment Level for the DS3 TVP. The Commitment Level determines the rates applicable to all DS3 SALs included in the DS3 TVP. These rates are arranged in tiers based on the Commitment Level (shown in parentheses below) as set forth in Section 5.7.22 following.

Commitment Level 1 (20 DS3 SALs – 49 DS3 SALs)
Commitment Level 2 (50 DS3 SALs – 149 DS3 SALs)
Commitment Level 3 (150 DS3 SALs – 274 DS3 SALs)
Commitment Level 4 (275 DS3 SALs – 499 DS3 SALs)
Commitment Level 5 (500 DS3 SALs or more)

(D) Terms and Conditions

(1) The DS3 TVP includes only SALs associated with Protected Individual DS3s without Company Electronics or Protected Individual DS3s with Company Electronics as set forth in Section 5.7.22 following (Eligible DS3 Services). No other DS3 offerings as set forth in this or other sections of this Guide will be included in the DS3 TVP.

(2) Subsequent to initial enrollment to the DS3 TVP under (B) preceding, the customer may, at any time during the Term Commitment, purchase additional DS3 SALs which are Eligible DS3 Services, and choose to (C)
include them in the DS3 TVP. The customer may also choose to submit (C)
ASRs converting existing Eligible DS3 Services not currently in the DS3 (C)
TVP to the DS3 TVP, or to submit ASRs converting existing DS3 services (C)
in the DS3 TVP to month to month or other discount plans. The (C)
additional SALs will be billed at the same rate level as all of the other DS3 SALs in the DS3 TVP. Rate levels for DS3 SALS in a DS3 TVP are set forth in Section 5.7.22 following and are determined by the Term Commitment and DS3 Commitment Quantity for the TVP. The addition of new DS3 SALs SALs to the DS3 TVP or removal of DS3 SALs from the (C)
DS3 TVP does not change the DS3 Commitment Quantity. (C)

Service availability limited. Refer to # footnote on Page 5-162.

(N)

© 2022 Frontier Communications Parent, Inc. All rights reserved.

5. SPECIAL ACCESS (Cont'd)

5.6 Rate Regulations (Cont'd)

5.6.19 DS3 Term Volume Plan# (Cont'd) (T)

(E) Annual Review

(1) On the anniversary date of the customer's DS3 TVP, the Telephone Company will conduct an Annual Review to determine if the customer has met its DS3 Commitment Quantity of DS3 SALs for the prior twelve (12) months. For purposes of conducting the Annual Review, the Telephone Company will develop an average number of DS3 SALs that were in-plan (C) over the prior 12 months by first summing the actual number of DS3 SALs that were in-plan for each of the prior 12 months (including any DS3 SALs (C) replaced by a Replacing Service(s) using the methodology for a Technology Migration specified in Section 2.10.3 preceding) and then dividing that total by twelve (12). The anniversary date shall be determined as set forth in (B) (1) (a) preceding.

(2) For purposes of the Annual Review, an allowance of up to three percent (3%) below the committed number of in-service DS3 SALs (rounded to the nearest DS3) will be considered as having met the DS3 Commitment Amount. The DS3 Commitment Quantity less the three percent (3%) allowance shall be defined as the Minimum DS3 Commitment Quantity. For example, the Minimum DS3 Commitment Quantity for 48 DS3 SALs is considered to be met if the average number of in-plan DS3 SALs (C) determined at the Annual Review is no less than 47 (e.g., 48 DS3 SALs less 3% allowance = 46.56 and then rounded up to 47 SALs). The average number of in-plan DS3 SALs determined at the Annual Review (C) may exceed the DS3 Commitment Quantity, subject to (E) (4) and (E) (5) following.

(3) Where the average number of in-plan DS3 SALs at the time of the Annual (C) Review is less than the Minimum DS3 Commitment Quantity determined in (E) (2) preceding (i.e., customer has not met its DS3 Commitment Quantity, less the 3% allowance), a penalty as set forth under (F) following will be assessed.

Service availability limited. Refer to # footnote on Page 5-162. (N)

© 2022 Frontier Communications Parent, Inc. All rights reserved.

5. SPECIAL ACCESS (Cont'd)

5.6 Rate Regulations (Cont'd)

5.6.19 DS3 Term Volume Plan# (Cont'd) (T)

(E) Annual Review (Cont'd)

(4) Where the average quantity of in-plan DS3 SALs at the time of the Annual Review is equal to the customer's Minimum DS3 Commitment Quantity (i.e., customer has met its DS3 Commitment Quantity. less the 3% allowance), or exceeds the DS3 Commitment Quantity by no more than thirty percent (30%), no penalty applies. The current DS3 Commitment Quantity will continue for the remainder of the TVP Term Commitment unless otherwise adjusted under this Section (E) and (G) following. (C)

(5) Where the average quantity of in-plan DS3 SALs at the time of the Annual Review exceeds the DS3 Commitment Quantity by more than thirty percent (30%), the DS3 Commitment Quantity will be automatically reset by the Telephone Company to a level that is equal to the existing DS3 Commitment Quantity of DS3 SALs plus 50% of the number of DS3 SALs that are in excess of the current DS3 Commitment Quantity rounded to the next DS3 SAL. For example, if the existing DS3 Commitment Quantity at the time of Annual Review is 100 DS3 SALs, and the average in-plan quantity at the time of Annual Review is 137 DS3 SALs, the new DS3 Commitment Quantity will be set at 119 SALS (100 + (37 x .5) = 118.5 DS3 SALs rounded to the nearest whole number) and will apply for the remainder of the Term Commitment unless otherwise adjusted under this Section (E). (C) (C)

(6) Within thirty (30) days after completion of an Annual Review, the customer has the option to reduce its DS3 Commitment Quantity under the Buy Down option described in (G) (4) following. Should the Annual Review result in the automatic increase of the DS3 Minimum Commitment Quantity as described in (E)(5) above, such increase will be applied before the customer may exercise the Buy Down option.. The reduced Commitment Level will be utilized for administering the terms and conditions in this Section 5.6.19 for the remainder of the Term Commitment. Buy Down provisions will be applied after application of any Shortfall Penalties due as a result of that Annual Review. The customer's exercise of the Buy Down provisions shall not relieve the customer of any Shortfall Penalties that are assessed by Telephone Company prior to the exercise of the Buy-Down. No adjustment to prior billing will occur, and no credits will be given for reduction to the DS3 Commitment Quantity under the Buy Down option.

Service availability limited. Refer to # footnote on Page 5-162. (N)

© 2022 Frontier Communications Parent, Inc. All rights reserved.

5. SPECIAL ACCESS (Cont'd)

5.6 Rate Regulations (Cont'd)

5.6.19 DS3 Term Volume Plan# (Cont'd) (T)

(F) Shortfall Penalties for Failing To Meet the Commitment Level

When the average number of in-plan DS3 SALs at the Annual Review is less than the Minimum DS3 Commitment Quantity, as determined in (E)(2) preceding, a shortfall penalty applies. The shortfall penalty is calculated by multiplying the following: (C)

(i) TVP rate for the predominant service type purchased by the customer (for example, if sixty percent (60%) of the customer's DS3 SALs included in the DS3 TVP are End User DS3 SALs with Company Electronics, then the rate for End User DS3 SALs with Company Electronics shall apply) by
(ii) The Minimum DS3 Commitment Quantity minus the average in-service quantity of DS3 SALs by
(iii) twelve (12) months

For example, a customer that has predominantly End User DS3 SALs with Company Electronics would incur the following shortfall penalty if it failed to meet its Minimum DS3 Commitment Quantity as calculated under (E) (2) preceding at the Annual Review. Assume the following circumstances occurred.

- Current commitment is 101 circuits.
- Average quantity of In-service DS3 SALs at Annual Review = 90
- Minimum DS3 SAL requirement is 101 less 3%, or 98 circuits
- Shortfall is 98 - 90 = 8
- Rate for predominant type of DS3 SAL is $975
- Shortfall penalty amount is 8 x $975 x 12 = $93,600

Service availability limited. Refer to # footnote on Page 5-162. (N)

© 2022 Frontier Communications Parent, Inc. All rights reserved.

FACILITIES FOR INTERSTATE ACCESS

5. SPECIAL ACCESS (Cont'd)

5.6 Rate Regulations (Cont'd)

5.6.19 DS3 Term Volume Plan# (Cont'd) (T)

(G) Changes to Commitment Level

(1) At any time during the Term Commitment, the customer may increase the DS3 Commitment Quantity to achieve a higher Commitment Level. Such request must be submitted in writing to the Telephone Company in accordance with the same requirements used for initial enrollment to DS3 TVP under (B) preceding. The rates associated with the increased DS3 Commitment Quantity are effective upon the enrollment date specified in the customer's written subscription to increase the DS3 Commitment Quantity. No retroactive adjustment prior to the subscription date for the increased DS3 Commitment Quantity will be made for any additional discount that may be associated with the customer-initiated increase in Commitment Level.

(2) When the DS3 Commitment Quantity for the TVP is reduced under (G) (4) following for a Buy-Down of the DS3 Commitment Quantity, the DS3 Commitment Quantity resulting from the Buy-Down will become the DS3 Commitment Quantity for determining the Commitment Level and rates going forward, and DS3 Commitment Quantity for the Annual Review(s) going forward.

(3) Reserved for future use.

Service availability limited. Refer to # footnote on Page 5-162. (N)

© 2022 Frontier Communications Parent, Inc. All rights reserved.

FACILITIES FOR INTERSTATE ACCESS

5. SPECIAL ACCESS (Cont'd)

5.6 Rate Regulations (Cont'd)

5.6.19 DS3 Term Volume Plan# (Cont'd) (T)

(G) Changes to Commitment Level (Cont'd)

(4) Within 30 days after completion of the Annual Review, the customer may reduce (Buy-Down) its DS3 Commitment Quantity. Customers may exercise the Buy-Down option by notifying the Telephone Company in writing and paying an amount equal to twenty percent (20%) of the recurring monthly charges for the remainder of the Term Commitment for each DS3 SAL that is removed from the DS3 Commitment Quantity. The monthly rate used to calculate the Buy-Down penalty is the DS3 SAL rate for the predominant type of DS3 SAL as defined in (F) preceding. The following is an example of calculation of the Buy-Down option. Assume the following:

Monthly rate for the predominant type of DS3 SAL is the End User SAL with Company Electronics at:	$975
Remaining months in plan:	36
Number of circuits reduced:	8

The Buy Down amount would be $975 x 36 x 8 x 20% Buy Down = $56,160.

Service availability limited. Refer to # footnote on Page 5-162. (N)

© 2022 Frontier Communications Parent, Inc. All rights reserved.

FACILITIES FOR INTERSTATE ACCESS

5. SPECIAL ACCESS (Cont'd)

5.6 Rate Regulations (Cont'd)

5.6.19 DS3 Term Volume Plan# (Cont'd)

(H) TVP Term Commitment Extension Option

(1) Prior to expiration of its DS3 TVP, the customer may convert its existing DS3 TVP to a new DS3 TVP of equal or greater Term Commitment. The effective date of the conversion to a new DS3 TVP of equal or greater Term Commitment will be the subscription date for the new DS3 TVP. Written subscription for the conversion must be submitted by the customer in the same manner as an initial subscription as described in (B) preceding. The customer may request Conversion Time-In-Service-Credit (C-TISC) for the period of time that the prior DS3 TVP was in effect, beginning with the date of subscription to the prior DS3 TVP and ending with the date of subscription to the new DS3 TVP. C-TISC reduces the time for which the new DS3 TVP is subject to termination liability under (K) following. For example, if a customer converts to a new five (5) year DS3 TVP after the first twenty-four (24) months of a three (3) year Term Commitment, the customer is eligible for up to 24 months of C-TISC. The amount of C-TISC must be specified by the customer at the time of subscription to the new plan in accordance with (K) (2) following.

(2) Prior to expiration of its DS3 TVP Term Commitment, if the customer converts its existing DS3 TVP to a new DS3 TVP of lesser Term Commitment than its current DS3 TVP, this will be a discontinuance of the current DS3 TVP and termination liability will apply as described in (K) following. The customer will be deemed to have subscribed to a new DS3 TVP with the lesser Term Commitment effective on the date of disconnection of the existing DS3 TVP. All Terms and Conditions in this Section 5.6.19 will apply to such new DS3 TVP with the lesser Term Commitment.

Service availability limited. Refer to # footnote on Page 5-162.

© 2022 Frontier Communications Parent, Inc. All rights reserved.

FACILITIES FOR INTERSTATE ACCESS

5. SPECIAL ACCESS (Cont'd)

5.6 Rate Regulations (Cont'd)

5.6.19 DS3 Term Volume Plan# (Cont'd)

(I) TVP Renewal Options

(1) At the expiration of the TVP Term Commitment, the customer may select a new DS3 TVP or may convert to any other payment plan offered in this Guide for DS3 Service. If the customer fails to make an election, the Telephone Company will continue DS3 TVP billing based on the current Commitment Level and Term Commitment for sixty (60) calendar days beyond the scheduled expiration date of the DS3 TVP or until an election is made.

(2) If the customer does not select a new DS3 TVP or convert to another payment plan within sixty (60) calendar days beyond the scheduled expiration date, the current DS3 TVP will be automatically renewed at the DS3 Commitment Quantity and Term Commitment in effect on the expiration date, and a new DS3 TVP term will begin. The effective date of the new DS3 TVP is the same date on which the old DS3 TVP expires.

(3) All terms and conditions under this Section 5.6.19, including termination liabilities, will apply to the renewed DS3 TVP.

(4) If the customer chooses to convert to a term plan option other than a DS3 TVP, this election will be treated as a disconnect of the existing service and installation of a new service, and all applicable rates, terms, conditions, ordering processes, and obligations associated with the new service option will apply. However, installation charges do not apply to those DS3 SALs that are in service on the date that they are converted from the DS3 TVP to the other term plan.

Service availability limited. Refer to # footnote on Page 5-162.

© 2022 Frontier Communications Parent, Inc. All rights reserved.

FACILITIES FOR INTERSTATE ACCESS

5. SPECIAL ACCESS (Cont'd)

5.6 Rate Regulations (Cont'd)

5.6.19 DS3 Term Volume Plan# (Cont'd)

(J) Upgrades

(1) Upgrade to a Higher Speed Service

(a) During the Term Commitment, the customer may upgrade DS3 service under a DS3 TVP to an equal or higher speed service by disconnecting the DS3 Service under the DS3 TVP and installing the upgraded service in accordance with the terms and conditions for that service. The upgraded service is subject to all terms, conditions, rates, and charges for the upgraded service as specified in the applicable sections of this Guide.

(b) Customer will qualify for adjustment of their DS3 Commitment Quantity, as set forth in (J) (3) following, if customer is unable to meet the Minimum DS3 Commitment Quantity and is subject to shortfall penalties as a direct result of its discontinuation of DS3 SALs which are upgraded to an equal or higher speed service. Customer will qualify for such adjustment to its DS3 Commitment Quantity only if the following terms and conditions are met:

(1) Both the discontinued service and the upgraded service are provided solely by the Telephone Company.

(2) The total bandwidth of the upgraded service is equal to or greater than the total bandwidth of the discontinued service. For example, if two (2) in-service DS3 SALs are discontinued and replaced by an OC-3 level SONET service (equivalent to 3 DS3s), the customer would be eligible to receive credit for two (2) DS3 SALs under this provision.

Service availability limited. Refer to # footnote on Page 5-162.

© 2022 Frontier Communications Parent, Inc. All rights reserved.

FACILITIES FOR INTERSTATE ACCESS

5. SPECIAL ACCESS (Cont'd)

5.6 Rate Regulations (Cont'd)

5.6.19 DS3 Term Volume Plan# (Cont'd)

(J) Upgrades (Cont'd)

(1) Upgrade to a Higher Speed Service (Cont'd)

(b) (Cont'd)

(3) The orders to disconnect the existing service and install the upgraded service are placed at the same time and with due dates that are within ninety (90) days of each other.

(4) The Term Commitment for the upgraded service must be equal to or greater than the Term Commitment for the discontinued service, except when an equal to or greater than Term Commitment period is not available under the upgraded service, in which case the longest Term Commitment period offered on the upgraded service must be selected.

(5) The originating and terminating locations of the service being upgraded are the same originating and termination locations for the replaced (upgraded) service.

(c) In addition to (b) (1) through (5) preceding, the customer must provide written notice of the upgrade to the Telephone Company for its use during the Annual Review. Written notification must be made at the time the customer orders the upgrade and/or thirty (30) calendar days following the Annual Review as described in (E) preceding. The notification must be received by the Telephone Company within the allotted time, or the customer may be subject to a shortfall penalty if it fails to meet the Minimum DS3 Commitment Quantity for the Annual Review period. Such notice must include order number information, including the purchase order number (PON), of each disconnected service that was upgraded during the Annual Review period. Failure to provide written notification to the Telephone Company within the allotted time will result in the customer forfeiting any credit for the upgrade that would otherwise apply.

Service availability limited. Refer to # footnote on Page 5-162.

© 2022 Frontier Communications Parent, Inc. All rights reserved.

5. SPECIAL ACCESS (Cont'd)

5.6 Rate Regulations (Cont'd)

5.6.19 DS3 Term Volume Plan# (Cont'd)

(J) Upgrades (Cont'd)

(1) Upgrade to a Higher Speed Service (Cont'd)

(d) DS3 SALs that qualify as upgrades under (a) through (c) preceding will be added to the customer's actual in-plan DS3 SAL counts for the purpose of determining whether the customer met the Minimum DS3 Commitment Quantity for the remainder of the TVP term. For example, if the customer has a DS3 Commitment Quantity of 155 DS3 SALs and is eligible for 20 DS3 SAL upgrades to a high speed service, the customer will have met the Minimum DS3 Commitment Quantity if their average in-plan quantity of DS3 SALs is equal to or greater than 130 DS3 SALs (e.g., 155 less 3% (5 DS3 SALs) less 20 DS3 SALs equals 130 DS3 SALs).

(2) Technology Migration

For customers who subscribe to a DS3 TVP on or after December 2, 2010, or renew an expiring DS3 TVP on or after December 2, 2010, the DS3 TVP customer may disconnect a High Capacity Digital DS3 Service provided under a DS3 TVP in order to replace such service with a Replacing Service pursuant to Section 2.10 preceding.

For customers who subscribed to a DS3 TVP prior to December 2, 2010, Section 5.6.19(J)(1) preceding includes replacements of a service under a DS3 TVP with a Telephone Company provided Ethernet private line service or a Telephone Company provided switched Ethernet service of a higher speed. However, the customer may, at its option, replace service under a DS3 TVP with a Replacing Service pursuant to Section 2.10 preceding in lieu of Section 5.6.19(J)(1) preceding.

Service availability limited. Refer to # footnote on Page 5-162.

© 2022 Frontier Communications Parent, Inc. All rights reserved.

5. SPECIAL ACCESS (Cont'd)

5.6 Rate Regulations (Cont'd)

5.6.19 DS3 Term Volume Plan# (Cont'd)

(K) Termination Liability

(1) When the entire DS3 TVP is discontinued prior to the end of the Term Commitment, termination liability applies to each DS3 SAL that is in-plan on the date of discontinuance. Termination liability charges apply from the date of discontinuance to the end of the Term Commitment of the DS3 TVP. When applicable, termination liability is equal to one hundred percent (100%) of the total monthly recurring charges for the remaining portion of the first year and fifteen percent (15%) of the total monthly recurring charges for the remainder of the Term Commitment. The monthly rates used to calculate termination liability are the monthly rates that would otherwise apply had the DS3 TVP not been discontinued (i. e., charges based on current Commitment Level and Term Commitment at the time of discontinuance).

(2) TISC

(a) TISC reduces the time for which the new DS3 TVP is subject to termination liability under (K)(1) preceding. TISC will be granted based on the longest in service time of any DS3 circuit being converted and the Term Commitment of the TVP as shown in the following table:

DS3 SAL Time In-Service	TVP Plan Term	TISC Allowance
24 to 36 months	3 Years or Longer	6 months credit
Over 36 months	3 Years	6 months credit
Over 36 months	5 Years or Longer	12 months credit

For example, if the customer had SALs with in service times of 11 months, 18 months, 26 months, and 48 months and subscribed to a 3-Year TVP, they would be eligible for 6 months of TISC, as set forth in the table above. If that same customer subscribed to a 5-Year TVP, they would be eligible for 12 months TISC.

Service availability limited. Refer to # footnote on Page 5-162.

© 2022 Frontier Communications Parent, Inc. All rights reserved.

FACILITIES FOR INTERSTATE ACCESS

5. SPECIAL ACCESS (Cont'd)

5.6 Rate Regulations (Cont'd)

5.6.19 DS3 Term Volume Plan# (Cont'd)

(K) Termination Liability (Cont'd)

(2) TISC (Cont'd)

(b) In order to receive TISC, the customer must have requested TISC at the time of initial subscription to the DS3 TVP under (B) preceding by providing the circuit ID and Service Establishment Date (SED) of the qualifying circuit.

(c) The maximum amount of TISC available under this Section 5.6.19 is twelve (12) months. TISC will be applied to the end of the Commitment Period. TISC reduces the number of months from the end of the selected Commitment Period to which termination liability charges are applicable for the purposes of calculating any Termination Liability that may be applied under this Section (K). For example, if the customer qualifies for 12 months of TISC as described above, and cancels a 5-Year (60 months) TVP in the 36th month of the plan, the termination liability will be calculated as if the Term Commitment for the TVP was 48 months. The customer would be liable for 12 months of Termination Liability at 15% of the applicable rate.

(d) The customer may also receive C-TISC as a result of converting its DS3 TVP to a new DS3 TVP under (H) preceding. For example, if the customer in the example described in (K)(2)(c) preceding was also eligible for 12 months of C-TISC (i.e., 12 months of TISC and 12 months of C-TISC), the total credit received by the customer would be 24 months. Termination liability would be calculated as if the Commitment Term of the TVP were: 60 months original Term Commitment – 24 months total TISC = 36 months, and no Termination Liability charges would apply.

Service availability limited. Refer to # footnote on Page 5-162.

© 2022 Frontier Communications Parent, Inc. All rights reserved.

FACILITIES FOR INTERSTATE ACCESS

5. SPECIAL ACCESS (Cont'd)

5.6 Rate Regulations (Cont'd)

5.6.19 DS3 Term Volume Plan# (Cont'd)

(L) Termination Without Liability

(1) Subject to the terms and conditions set forth in this Section 5.6.19, including any shortfall penalties that might apply for failing to meet the Minimum DS3 Commitment Quantity, Minimum Period charges, and all other applicable requirements and penalties as set forth in other sections of this Guide, individual DS3 SALs may be disconnected under the DS3 TVP without the application of termination liability charges.

(2) Reserved For Future Use. (C)

(3) A customer may cancel its DS3 TVP in order to subscribe its DS3 Services to the National Discount Plan as set forth in Section 23.1 following.

Service availability limited. Refer to # footnote on Page 5-162

© 2024 Frontier Communications Parent, Inc. All rights reserved.

FACILITIES FOR INTERSTATE ACCESS

5. SPECIAL ACCESS (Cont'd)

5.6 Rate Regulations (Cont'd)

5.6.19 DS3 Term Volume Plan# (Cont'd)

(M) Minimum Period Charges

A one (1) year minimum period will apply to all new DS3 SALs that are added after the DS3 TVP enrollment date. If such service is disconnected prior to completion of the first year following establishment of such service, a charge equal to 100% of the monthly recurring charge for such service applies for the balance of the minimum period. Minimum period charges are in addition to any termination liabilities that may be assessed in accordance with (K)(1) preceding, and no Time in Service Credits are applicable for the minimum period. For example, assume that the customer subscribes to DS3 TVP on the first day of January and subsequently orders a new service under its DS3 TVP on the first day of February in the same year. Also assume that the customer disconnects that same service seven (7) months later and that the monthly recurring charge for that service at the time of the disconnection is $900. Further, assume that the customer continues to be enrolled in its DS3 TVP. The Minimum Period Charge will be the five (5) remaining months x $900 = $4,500 Minimum Period liability. DS3 SALs that are already in-service at the time of initial subscription to TVP are not subject to the 1 year minimum period under this (K)(3).

Service availability limited. Refer to # footnote on Page 5-162.

© 2022 Frontier Communications Parent, Inc. All rights reserved.

FACILITIES FOR INTERSTATE ACCESS

5. SPECIAL ACCESS (Cont'd)

5.6 Rate Regulations (Cont'd)

5.6.19 DS3 Term Volume Plan# (Cont'd)

(N) Rate Changes

The Telephone Company may change rates for any or all of the DS3 TVP SAL rate elements at any time. Subject to the provisions of (L) (2) preceding, the new rates will apply for the remainder of the TVP Term.

(O) TVP Nonrecurring Charge

With the exception of converting an existing DS3 SAL to a DS3 TVP under (B) (3) preceding, nonrecurring charges apply as specified in this or other sections of this Guide.

Service availability limited. Refer to # footnote on Page 5-162.

© 2022 Frontier Communications Parent, Inc. All rights reserved.

5. SPECIAL ACCESS (Cont'd)

5.7 Rates and Charges

5.7.1 Nonrecurring Charges

Special Access Ordering Charges

Jurisdiction	Design Change Per ASR/Per Occurrence	
California, Florida Texas		
All Price Bands	$2,054.55	(C)

© 2024 Frontier Communications Parent, Inc. All rights reserved.

5. SPECIAL ACCESS (Cont'd)

5.7 Rates and Charges (Cont'd)

5.7.2 Voiceband Facilities (Cont'd)

(A) Standard Arrangements

Jurisdiction	Special Access Line (End User CDL) Nonrecurring Charge	Two Wire Monthly Rate	Four Wire Monthly Rate	
California, Texas				
All Price Bands	$3,937.87	534.02	$ 844.29	(C)
Florida	3,937.87	484.33	737.99	

Jurisdiction	Special Transport Per Airline Mile Monthly Rate	Special Access Line (IC CDL) Nonrecurring Charge	Two Wire Monthly Rate	Four Wire Monthly Rate	
California, Texas Florida					
All Price Bands	$96.17	$3,937.87	$534.02	$844.29	(C)

.

© 2024 Frontier Communications Parent, Inc. All rights reserved.

5. SPECIAL ACCESS (Cont'd)

5.7 Rates and Charges (Cont'd)

5.7.2 Voiceband Facilities (Cont'd)

(B) Optional Arrangements

Supplemental Features

Jurisdiction	Multipoint Data Bridging (Per Port) Monthly Rate	Voice Conference Bridging (Per Port) Monthly Rate
California		
Price Band A	$9.60	$9.60
Price Band B	9.60	9.60
Price Band C	9.60	9.60
Florida		
Price Band A	9.60	9.60
Price Band B	9.60	9.60
Price Band C	9.60	9.60
Texas		
Price Band A	9.60	9.60
Price Band A	9.60	9.60
Price Band A	9.60	9.60

© 2022 Frontier Communications Parent, Inc. All rights reserved.

5. SPECIAL ACCESS (Cont'd)

5.7 Rates and Charges (Cont'd)

5.7.2 Voiceband Facilities (Cont'd)

(B) Optional Arrangements (Cont'd)

Supplemental Features
Alarm Distribution Bridging

Jurisdiction	Common Equipment Monthly Rate	Per Two Wire Port Monthly Rate
California		
Price Band A	$36.00	$2.40
Price Band B	36.00	2.40
Price Band C	36.00	2.40
Florida		
Price Band A	36.00	2.40
Price Band B	36.00	2.40
Price Band C	36.00	2.40
Texas		
Price Band A	36.00	2.40
Price Band B	36.00	2.40
Price Band C	36.00	2.40

© 2022 Frontier Communications Parent, Inc. All rights reserved.

5. SPECIAL ACCESS (Cont'd)

5.7 Rates and Charges (Cont'd)

5.7.2 Voiceband Facilities (Cont'd)

(B) Optional Arrangements (Cont'd)

Supplemental Features
Conditioning Arrangements-Data

Jurisdiction	Type C Monthly Rate	Type DA Monthly Rate
California		
Price Bands, A, B and C	$1.80	$2.40
Florida		
Price Bands, A, B and C	1.80	2.40
Texas		
Price Bands, A, B and C	1.80	2.40

Supplemental Features
Conditioning Arrangements-Data

Jurisdiction	Type C - Improved Monthly Rate
California	
Price Bands, A, B and C	$36.00
Florida	
Price Bands, A, B and C	36.00
Texas	
Price Bands, A, B and C	36.00

© 2022 Frontier Communications Parent, Inc. All rights reserved.

FACILITIES FOR INTERSTATE ACCESS

5. SPECIAL ACCESS (Cont'd)

5.7 Rates and Charges (Cont'd)

5.7.2 Voiceband Facilities (Cont'd)

(B) Optional Arrangements (Cont'd)

Supplemental Features
Signaling Arrangement

Jurisdiction	Loop Signaling Range Extension, per SAL Monthly Rate	Loop or E&M to SF, per SAL Monthly Rate
California		
Price Bands, A, B and C	$12.00	$19.20
Florida		
Price Bands, A, B and C	12.00	19.20
Texas		
Price Bands, A, B and C	12.00	19.20

Jurisdiction	E&M to DX, per SAL Monthly Rate	E&M to Loop, per SAL Monthly Rate
California		
Price Bands, A, B and C	$16.80	$14.40
Florida		
Price Bands, A, B and C	16.80	14.40
Texas		
Price Bands, A, B and C	16.80	14.40

© 2022 Frontier Communications Parent, Inc. All rights reserved.

5. SPECIAL ACCESS (Cont'd)

5.7 Rates and Charges (Cont'd)

5.7.2 Voiceband Facilities (Cont'd)

(B) Optional Arrangements (Cont'd)

	Supplemental Features Signaling Arrangement	
Jurisdiction	Loop or E&M To PCM, per SAL Monthly Rate	Automatic Ringdown, per SAL Monthly Rate
California		
Price Bands, A, B and C	$4.80	$12.00
Florida		
Price Bands, A, B and C	4.80	12.00
Texas		
Price Bands, A, B and C	4.80	12.00

© 2022 Frontier Communications Parent, Inc. All rights reserved.

FACILITIES FOR INTERSTATE ACCESS

5. SPECIAL ACCESS (Cont'd)

5.7 Rates and Charges (Cont'd)

5.7.2 Voiceband Facilities (Cont'd)

(B) Optional Arrangements (Cont'd)

Supplemental Features
Echo Control

Jurisdiction	Echo Suppression, per circuit* Monthly Rate	Echo Canceller, per circuit Monthly Rate
California		
Price Bands, A, B and C	$36.00	$102.00
Florida		
Price Bands, A, B and C	36.00	102.00
Texas		
Price Bands, A, B and C	36.00	102.00

* Obsolete and is applicable only to circuits so equipped prior to January 1, 1987.

© 2022 Frontier Communications Parent, Inc. All rights reserved.

5. SPECIAL ACCESS (Cont'd)

5.7 Rates and Charges (Cont'd)

5.7.2 Voiceband Facilities (Cont'd)

(B) Optional Arrangements (Cont'd)

Supplemental Features
Voiceband Facility
Switching Arrangement

Jurisdiction	Monthly Rate
California	
Price Bands, A, B and C	$8.40
Florida	
Price Bands, A, B and C	8.40
Texas	
Price Bands, A, B and C	8.40

© 2022 Frontier Communications Parent, Inc. All rights reserved.

5. SPECIAL ACCESS (Cont'd)

5.7 Rates and Charges (Cont'd)

5.7.2 Voiceband Facilities (Cont'd)

(B) Optional Arrangements (Cont'd)

Supplemental Features

Jurisdiction	Improved Return Loss, per SAL Monthly Rate	Improved Termination Option, per SAL Monthly Rate
California		
Price Bands, A, B and C	$4.50	$12.00
Florida		
Price Bands, A, B and C	4.50	12.00
Texas		
Price Bands, A, B and C	4.50	12.00

Jurisdiction	Improved Equal Level Echo PathLoss, per SAL Monthly Rate
California	
Price Bands, A, B and C	$4.50
Florida	
Price Bands, A, B and C	4.50
Texas	
Price Bands, A, B and C	4.50

© 2022 Frontier Communications Parent, Inc. All rights reserved.

FACILITIES FOR INTERSTATE ACCESS

5. SPECIAL ACCESS (Cont'd)

5.7 Rates and Charges (Cont'd)

5.7.3 Program Audio Facilities#

(A) Standard Arrangements (200-3500 Hz)

Jurisdiction	Special Access Line (End User CDL) Nonrecurring Charge	Monthly Rate	Daily Rate
California			
Competitive	$250.00	$45.60	$4.56
Florida			
Competitive	250.00	66.19	6.62
Texas			
Competitive	250.00	36.58	3.66

Jurisdiction	Special Transport Per Airline Mile Monthly	Daily	Special Access Line (IC CDL) Nonrecurring Charge	Monthly Rate	Daily Rate
California					
Price Band A	$15.65	$1.57	$250.00	$38.00	$3.80
Price Band B	15.65	1.57	250.00	38.00	3.80
Price Band C	15.65	1.57	250.00	38.00	3.80
Florida					
Price Band A	17.12	1.71	250.00	55.16	5.52
Price Band B	17.12	1.71	250.00	55.16	5.52
Price Band C	17.12	1.71	250.00	55.16	5.52
Texas					
Price Band A	13.80	1.38	250.00	30.50	3.05
Price Band B	13.80	1.38	250.00	30.50	3.05
Price Band C	13.80	1.38	250.00	30.50	3.05

Service availability limited. Refer to # footnote on Page 5-18.

© 2022 Frontier Communications Parent, Inc. All rights reserved.

FACILITIES FOR INTERSTATE ACCESS

5. SPECIAL ACCESS (Cont'd)

5.7 Rates and Charges (Cont'd)

5.7.3 Program Audio Facilities# (Cont'd)

(B) Standard Arrangements (100-5000 Hz)

Jurisdiction	Special Access Line (End User CDL) Nonrecurring Charge	Monthly Rate	Daily Rate
California			
Competitive	$250.00	$45.60	$4.56
Florida			
Competitive	250.00	66.19	6.62
Texas			
Competitive	250.00	36.58	3.66

Jurisdiction	Special Transport Per Airline Mile Monthly	Daily	Special Access Line (IC CDL) Nonrecurring Charge	Monthly Rate	Daily Rate
California					
Price Band A	$15.65	$1.57	$250.00	$38.00	$3.80
Price Band B	15.65	1.57	250.00	38.00	3.80
Price Band C	15.65	1.57	250.00	38.00	3.80
Florida					
Price Band A	17.12	1.71	250.00	55.16	5.52
Price Band B	17.12	1.71	250.00	55.16	5.52
Price Band C	17.12	1.71	250.00	55.16	5.52
Texas					
Price Band A	13.80	1.38	250.00	30.50	3.05
Price Band B	13.80	1.38	250.00	30.50	3.05
Price Band C	13.80	1.38	250.00	30.50	3.05

Service availability limited. Refer to # footnote on Page 5-18.

© 2022 Frontier Communications Parent, Inc. All rights reserved.

5. SPECIAL ACCESS (Cont'd)

5.7 Rates and Charges (Cont'd)

5.7.3 Program Audio Facilities# (Cont'd)

(C) Standard Arrangements (50-8000 Hz)

Jurisdiction	Special Access Line (End User CDL) Nonrecurring Charge	Monthly Rate	Daily Rate
California			
Competitive		$250.00	$45.60
$4.56			
Florida			
Competitive		250.00	66.19
6.62			
Texas			
Competitive		250.00	36.58
3.66			

Jurisdiction	Special Transport Per Airline Mile Monthly	Daily	Special Access Line (IC CDL) Nonrecurring Charge	Monthly Rate	Daily Rate
California					
Price Band A	$15.65	$1.57	$250.00	$38.00	$3.80
Price Band B	15.65	1.57	250.00	38.00	3.80
Price Band C	15.65	1.57	250.00	38.00	3.80
Florida					
Price Band A	17.12	1.71	250.00	55.16	5.52
Price Band B	17.12	1.71	250.00	55.16	5.52
Price Band C	17.12	1.71	250.00	55.16	5.52
Texas					
Price Band A	13.80	1.38	250.00	30.50	3.05
Price Band B	13.80	1.38	250.00	30.50	3.05
Price Band C	13.80	1.38	250.00	30.50	3.05

Service availability limited. Refer to # footnote on Page 5-18.

© 2022 Frontier Communications Parent, Inc. All rights reserved.

FACILITIES FOR INTERSTATE ACCESS

5. SPECIAL ACCESS (Cont'd)

5.7 Rates and Charges (Cont'd)

5.7.3 Program Audio Facilities# (Cont'd)

(D) Standard Arrangements (50-15000 Hz)

Jurisdiction	Special Access Line (End User CDL) Nonrecurring Charge	Monthly Rate	Daily Rate
California			
Competitive	$250.00	$45.60	$4.56
Florida			
Competitive	250.00	66.19	6.62
Texas			
Competitive	250.00	36.58	3.66

Jurisdiction	Special Transport Per Airline Mile Monthly	Daily	Special Access Line (IC CDL) Nonrecurring Charge	Monthly Rate	Daily Rate
California					
Price Band A	$15.65	$1.57	$250.00	$38.00	$3.80
Price Band B	15.65	1.57	250.00	38.00	3.80
Price Band C	15.65	1.57	250.00	38.00	3.80
Florida					
Price Band A	17.12	1.71	250.00	55.16	5.52
Price Band B	17.12	1.71	250.00	55.16	5.52
Price Band C	17.12	1.71	250.00	55.16	5.52
Texas					
Price Band A	13.80	1.38	250.00	30.50	3.05
Price Band B	13.80	1.38	250.00	30.50	3.05
Price Band C	13.80	1.38	250.00	30.50	3.05

Service availability limited. Refer to # footnote on Page 5-18.

© 2022 Frontier Communications Parent, Inc. All rights reserved.

5. SPECIAL ACCESS (Cont'd)

5.7 Rates and Charges (Cont'd)

5.7.3 Program Audio Facilities# (Cont'd)

(E) Optional Arrangements (50-15000 Hz Facilities only)

Supplemental Features

Conditioning - Program Audio
Stereo Conditioning, per occurrence

Jurisdiction	Monthly Rate	Daily Rate
California		
Price Bands A, B, and C	$1.00	$.10
Florida		
Price Bands A, B and C	1.00	.10
Texas		
Price Bands A, B and C	1.00	.10

Program Audio Bridging (Per Port)

Jurisdiction	Monthly Rate	Daily Rate
California		
Price Bands A, B and C	$1.00	$.10
Florida		
Price Bands A, B and C	1.00	.10
Texas		
Price Bands A, B and C	1.00	.10

Service availability limited. Refer to # footnote on Page 5-18.

© 2022 Frontier Communications Parent, Inc. All rights reserved.

5. SPECIAL ACCESS (Cont'd)

5.7 Rates and Charges (Cont'd)

5.7.3 Program Audio Facilities# (Cont'd)

(E) Optional Arrangements (50-15000 Hz Facilities only) (Cont'd)

Supplemental Features

Conditioning - Program Audio
Conditioning Program Audio -Zero Loss, per SAL

Jurisdiction	Monthly Rate	Daily Rate
California		
Price Bands A, B and C	$12.00	$1.20
Florida		
Price Bands A, B and C	12.00	1.20
Texas		
Price Bands A, B and C	12.00	1.20

Service availability limited. Refer to # footnote on Page 5-18.

© 2022 Frontier Communications Parent, Inc. All rights reserved.

5. SPECIAL ACCESS (Cont'd)

5.7 Rates and Charges (Cont'd)

5.7.4 Video Facilities

(A) RESERVED FOR FUTURE USE

© 2022 Frontier Communications Parent, Inc. All rights reserved.

5. SPECIAL ACCESS (Cont'd)

5.7 Rates and Charges (Cont'd)

5.7.4 Video Facilities (Cont'd)

(B) Video Digital Transport Service - Type II

(1) RESERVED FOR FUTURE USE

© 2022 Frontier Communications Parent, Inc. All rights reserved.

5. SPECIAL ACCESS (Cont'd)

5.7 Rates and Charges (Cont'd)

5.7.4 Video Facilities (Cont'd)

(B) Video Digital Transport Service - Type II (Cont'd)

(1) Standard Arrangements (Cont'd)

(b) 270 Mbps Service

(1) RESERVED FOR FUTURE USE

© 2022 Frontier Communications Parent, Inc. All rights reserved.

5. SPECIAL ACCESS (Cont'd)

5.7 Rates and Charges (Cont'd)

5.7.4 Video Facilities (Cont'd)

(B) Video Digital Transport Service - Type II (Cont'd)

(1) Standard Arrangements (Cont'd)

(b) 270 Mbps Service (Cont'd)

(2) RESERVED FOR FUTURE USE

© 2022 Frontier Communications Parent, Inc. All rights reserved.

5. SPECIAL ACCESS (Cont'd)

5.7 Rates and Charges (Cont'd)

5.7.4 Video Facilities (Cont'd)

(B) Video Digital Transport Service - Type II (Cont'd)

(1) Standard Arrangements (Cont'd)

(b) 270 Mbps Service (Cont'd)

(3) RESERVED FOR FUTURE USE

(4) Transport

Jurisdiction	Per Mile	Fixed Per Each 20 miles
California	$17.00	$49.00
Florida	18.00	50.00
Texas	NA	NA

© 2022 Frontier Communications Parent, Inc. All rights reserved.

5. SPECIAL ACCESS (Cont'd)

5.7 Rates and Charges (Cont'd)

5.7.4 Video Facilities (Cont'd)

(B) Video Digital Transport Service - Type II (Cont'd)

(1) Standard Arrangements (Cont'd)

(c) TV1-Analog

(1) RESERVED FOR FUTURE USE

© 2022 Frontier Communications Parent, Inc. All rights reserved.

5. SPECIAL ACCESS (Cont'd)

5.7 Rates and Charges (Cont'd)

5.7.4 Video Facilities (Cont'd)

(B) Video Digital Transport Service - Type II (Cont'd)

(1) Standard Arrangements (Cont'd)

(c) TV1-Analog (Cont'd)

(2) RESERVED FOR FUTURE USE

© 2022 Frontier Communications Parent, Inc. All rights reserved.

5. SPECIAL ACCESS (Cont'd)

5.7 Rates and Charges (Cont'd)

5.7.4 Video Facilities (Cont'd)

(B) Video Digital Transport Service - Type II (Cont'd)

(1) Standard Arrangements (Cont'd)

(c) TV1-Analog (Cont'd)

(3) RESERVED FOR FUTURE USE

(4) Transport

Jurisdiction	Per Mile	Fixed Per Each 20 miles
California	$18.00	$51.00
Texas	17.25	49.75

© 2022 Frontier Communications Parent, Inc. All rights reserved.

5. SPECIAL ACCESS (Cont'd)

5.7 Rates and Charges (Cont'd)

5.7.4 Video Facilities (Cont'd)

(B) Video Digital Transport Service - Type II (Cont'd)

(2) Optional Features

(a) 270 Mbps

(1) Audio

Per Pair of Stereo Channels

	Monthly		Daily	
Jurisdiction	NRC	MRC	NRC	MRC
California	$100.00	$172.00	$0.00	$16.00
Florida	100.00	170.00	0.00	15.00
Texas	NA	NA	NA	NA

(2) Alternate Switching - Manual

Jurisdiction	Per Event
California	$20.00
Florida	20.00
Texas	NA

© 2022 Frontier Communications Parent, Inc. All rights reserved.

5. SPECIAL ACCESS (Cont'd)

5.7 Rates and Charges (Cont'd)

5.7.4 Video Facilities (Cont'd)

(B) Video Digital Transport Service - Type II (Cont'd)

(2) Optional Features (Cont'd)

(a) 270 Mbps (Cont'd)

(3) Conversions

	Codec Conversion				Format Conversion
Jurisdiction	Hourly*	Daily*	Weekly*	Monthly	Hourly
California	$88.00	$200.00	$475.00	$1,314.00	$88.00
Florida	NA	NA	NA	NA	NA
Texas	NA	NA	NA	NA	NA

(4) Interhub Arrangement

	Port		Transport
Jurisdiction	NRC	MRC	Per Mile
California	$0.00	$99.00	$0.14

© 2022 Frontier Communications Parent, Inc. All rights reserved.

5. SPECIAL ACCESS (Cont'd)

5.7 Rates and Charges (Cont'd)

5.7.4 Video Facilities (Cont'd)

(B) Video Digital Transport Service - Type II (Cont'd)

(2) Optional Features (Cont'd)

(b) TV1-Analog

(1) Additional Audio Channels (Maximum 2)

Jurisdiction	NRC	MRC	Daily Rate
California	$100.00	$17.00	$2.50
Texas	100.00	16.50	2.50

(2) Alternate Switching, Manual

Jurisdiction	Per Event
California	$20.00
Texas	20.00

(3) Conversions

	Codec Conversion				Format Conversion
Jurisdiction	Hourly*	Daily*	Weekly*	Monthly	Hourly
California	$88.00	$200.00	$490.00	$1,249.00	$88.00
Texas	NA	NA	NA	NA	NA

(4) Interhub Arrangement

Jurisdiction	Port NRC	Port MRC	Transport Per Mile
California		$98.00	$.14
Texas		NA	NA

* Applies to continuous usage.

© 2022 Frontier Communications Parent, Inc. All rights reserved.

5. SPECIAL ACCESS (Cont'd)

5.7 Rates and Charges (Cont'd)

5.7.4 Video Facilities (Cont'd)

(B) Video Digital Transport Service - Type II (Cont'd)

(3) Term Commitment Plan (TCP)

(a) RESERVED FOR FUTURE USE

© 2022 Frontier Communications Parent, Inc. All rights reserved.

5. SPECIAL ACCESS (Cont'd)

5.7 Rates and Charges (Cont'd)

5.7.4 Video Facilities (Cont'd)

(B) Video Digital Transport Service - Type II (Cont'd)

(3) Term Commitment Plan (TCP) (Cont'd)

(b) 270 Mbps Service

(1) RESERVED FOR FUTURE USE

© 2022 Frontier Communications Parent, Inc. All rights reserved.

5. SPECIAL ACCESS (Cont'd)

5.7 Rates and Charges (Cont'd)

5.7.4 Video Facilities (Cont'd)

(B) Video Digital Transport Service - Type II (Cont'd)

(3) Term Commitment Plan (TCP) (Cont'd)

(b) 270 Mbps Service (Cont'd)

(1) RESERVED FOR FUTURE USE

© 2022 Frontier Communications Parent, Inc. All rights reserved.

5. SPECIAL ACCESS (Cont'd)

5.7 Rates and Charges (Cont'd)

5.7.4 Video Facilities (Cont'd)

(B) Video Digital Transport Service - Type II (Cont'd)

(3) Term Commitment Plan (TCP) (Cont'd)

(b) 270 Mbps Service (Cont'd)

(1) RESERVED FOR FUTURE USE

© 2022 Frontier Communications Parent, Inc. All rights reserved.

5. SPECIAL ACCESS (Cont'd)

5.7 Rates and Charges (Cont'd)

5.7.4 Video Facilities (Cont'd)

(B) Video Digital Transport Service - Type II (Cont'd)

(3) Term Commitment Plan (TCP) (Cont'd)

(b) 270 Mbps Service (Cont'd)

(1) RESERVED FOR FUTURE USE

© 2022 Frontier Communications Parent, Inc. All rights reserved.

5. SPECIAL ACCESS (Cont'd)

5.7 Rates and Charges (Cont'd)

5.7.4 Video Facilities (Cont'd)

(B) Video Digital Transport Service - Type II (Cont'd)

(3) Term Commitment Plan (TCP) (Cont'd)

(b) 270 Mbps Service (Cont'd)

(2) RESERVED FOR FUTURE USE

© 2022 Frontier Communications Parent, Inc. All rights reserved.

5. SPECIAL ACCESS (Cont'd)

5.7 Rates and Charges (Cont'd)

5.7.4 Video Facilities (Cont'd)

(B) Video Digital Transport Service - Type II (Cont'd)

(3) Term Commitment Plan (TCP) (Cont'd)

(b) 270 Mbps Service (Cont'd)

(2) RESERVED FOR FUTURE USE

© 2022 Frontier Communications Parent, Inc. All rights reserved.

5. SPECIAL ACCESS (Cont'd)

5.7 Rates and Charges (Cont'd)

5.7.4 Video Facilities (Cont'd)

(B) Video Digital Transport Service - Type II (Cont'd)

(3) Term Commitment Plan (TCP) (Cont'd)

(b) 270 Mbps Service (Cont'd)

(2) RESERVED FOR FUTURE USE

© 2022 Frontier Communications Parent, Inc. All rights reserved.

5. SPECIAL ACCESS (Cont'd)

5.7 Rates and Charges (Cont'd)

5.7.4 Video Facilities (Cont'd)

(B) Video Digital Transport Service - Type II (Cont'd)

(3) Term Commitment Plan (TCP) (Cont'd)

(b) 270 Mbps Service (Cont'd)

(2) RESERVED FOR FUTURE USE

© 2022 Frontier Communications Parent, Inc. All rights reserved.

5. SPECIAL ACCESS (Cont'd)

5.7 Rates and Charges (Cont'd)

5.7.4 Video Facilities (Cont'd)

(B) Video Digital Transport Service - Type II (Cont'd)

(3) Term Commitment Plan (TCP) (Cont'd)

(b) 270 Mbps Service (Cont'd)

(3) RESERVED FOR FUTURE USE

© 2022 Frontier Communications Parent, Inc. All rights reserved.

5. SPECIAL ACCESS (Cont'd)

5.7 Rates and Charges (Cont'd)

5.7.4 Video Facilities (Cont'd)

(B) Video Digital Transport Service - Type II (Cont'd)

(3) Term Commitment Plan (TCP) (Cont'd)

(b) 270 Mbps Service (Cont'd)

(3) RESERVED FOR FUTURE USE

© 2022 Frontier Communications Parent, Inc. All rights reserved.

5. SPECIAL ACCESS (Cont'd)

5.7 Rates and Charges (Cont'd)

5.7.4 Video Facilities (Cont'd)

(B) Video Digital Transport Service - Type II (Cont'd)

(3) Term Commitment Plan (TCP) (Cont'd)

(b) 270 Mbps Service (Cont'd)

(4) Transport

	1 Year		2 Years	
Jurisdiction	Per Mile	Fixed Per Each 20 miles	Per Mile	Fixed Per Each 20 miles
California	$17.00	$47.00	$16.00	$45.00
Florida	17.50	48.00	17.00	46.00
Texas	NA	NA	NA	NA

	3 Years		5 Years	
Jurisdiction	Per Mile	Fixed Per Each 20 miles	Per Mile	Fixed Per Each 20 miles
California	$16.00	$43.00	$15.00	$41.00
Florida	16.50	44.00	16.00	42.00
Texas	NA	NA	NA	NA

© 2022 Frontier Communications Parent, Inc. All rights reserved.

5. SPECIAL ACCESS (Cont'd)

5.7 Rates and Charges (Cont'd)

5.7.4 Video Facilities (Cont'd)

(B) Video Digital Transport Service - Type II (Cont'd)

(3) Term Commitment Plan (TCP) (Cont'd)

(c) TV1-Analog

(1) RESERVED FOR FUTURE USE

© 2022 Frontier Communications Parent, Inc. All rights reserved.

5. SPECIAL ACCESS (Cont'd)

5.7 Rates and Charges (Cont'd)

5.7.4 Video Facilities (Cont'd)

(B) Video Digital Transport Service - Type II (Cont'd)

(3) Term Commitment Plan (TCP) (Cont'd)

(c) TV1-Analog (Cont'd)

(1) RESERVED FOR FUTURE USE

© 2022 Frontier Communications Parent, Inc. All rights reserved.

5. SPECIAL ACCESS (Cont'd)

5.7 Rates and Charges (Cont'd)

5.7.4 Video Facilities (Cont'd)

(B) Video Digital Transport Service - Type II (Cont'd)

(3) Term Commitment Plan (TCP) (Cont'd)

(c) TV1-Analog (Cont'd)

(2) RESERVED FOR FUTURE USE

© 2022 Frontier Communications Parent, Inc. All rights reserved.

5. SPECIAL ACCESS (Cont'd)

5.7 Rates and Charges (Cont'd)

5.7.4 Video Facilities (Cont'd)

(B) Video Digital Transport Service - Type II (Cont'd)

(3) Term Commitment Plan (TCP) (Cont'd)

(c) TV1-Analog (Cont'd)

(2) RESERVED FOR FUTURE USE

© 2022 Frontier Communications Parent, Inc. All rights reserved.

5. SPECIAL ACCESS (Cont'd)

5.7 Rates and Charges (Cont'd)

5.7.4 Video Facilities (Cont'd)

(B) Video Digital Transport Service - Type II (Cont'd)

(3) Term Commitment Plan (TCP) (Cont'd)

(c) TV1-Analog (Cont'd)

(3) RESERVED FOR FUTURE USE

© 2022 Frontier Communications Parent, Inc. All rights reserved.

5. SPECIAL ACCESS (Cont'd)

5.7 Rates and Charges (Cont'd)

5.7.4 Video Facilities (Cont'd)

(B) Video Digital Transport Service - Type II (Cont'd)

(3) Term Commitment Plan (TCP) (Cont'd)

(c) TV1-Analog (Cont'd)

(4) Transport (Cont'd)

1 Year

Jurisdiction	Per Mile	Fixed Per Each 20 miles
California	$17.00	$49.00
Texas	16.75	47.75

2 Years

Jurisdiction	Per Mile	Fixed Per Each 20 miles
California	$17.00	$47.00
Texas	16.25	45.75

3 Years

Jurisdiction	Per Mile	Fixed Per Each 20 miles
California	$16.00	$45.00
Texas	15.75	43.75

5 Years

Jurisdiction	Per Mile	Fixed Per Each 20 miles
California	$16.00	$43.00
Texas	15.25	41.75

© 2022 Frontier Communications Parent, Inc. All rights reserved.

5. SPECIAL ACCESS (Cont'd)

5.7 Rates and Charges (Cont'd)

5.7.4 Video Facilities (Cont'd)

(B) Video Digital Transport Service - Type II (Cont'd)

(4) Short Duration Offerings - Daily Rates (Cont'd)

(a) 270 Mbps (Cont'd)

(1) RESERVED FOR FUTURE USE

(2) RESERVED FOR FUTURE USE

© 2022 Frontier Communications Parent, Inc. All rights reserved.

5. SPECIAL ACCESS (Cont'd)

5.7 Rates and Charges (Cont'd)

5.7.4 Video Facilities (Cont'd)

(B) Video Digital Transport Service - Type II (Cont'd)

(4) Short Duration Offerings - Daily Rates (Cont'd)

(a) 270 Mbps (Cont'd)

(3) RESERVED FOR FUTURE USE

(4) Transport for Daily Video Usage

Jurisdiction	Per Mile, Daily	Fixed Per 20 Miles, Daily
California	$17.00	$49.00
Florida	18.00	50.00
Texas	NA	NA

© 2022 Frontier Communications Parent, Inc. All rights reserved.

5. SPECIAL ACCESS (Cont'd)

5.7 Rates and Charges (Cont'd)

5.7.4 Video Facilities (Cont'd)

(B) Video Digital Transport Service - Type II (Cont'd)

(4) Short Duration Offerings - Daily Rates (Cont'd)

(a) TV1-Analog

(1) RESERVED FOR FUTURE USE

(2) RESERVED FOR FUTURE USE

© 2022 Frontier Communications Parent, Inc. All rights reserved.

FACILITIES FOR INTERSTATE ACCESS

5. SPECIAL ACCESS (Cont'd)

5.7 Rates and Charges (Cont'd)

5.7.4 Video Facilities (Cont'd)

(B) Video Digital Transport Service - Type II (Cont'd)

(4) Short Duration Offerings - Daily Rates (Cont'd)

(a) TV1-Analog (Cont'd)

(3) RESERVED FOR FUTURE USE

(4) Transport for Daily Video Usage

Jurisdiction	Per Mile, Daily	Fixed Per 20 Miles, Daily
California	$18.00	$51.00
Texas	17.25	49.75

© 2022 Frontier Communications Parent, Inc. All rights reserved.

5. SPECIAL ACCESS (Cont'd)

5.7 Rates and Charges (Cont'd)

5.7.5 Digital Data Service Facilities
(2.4, 4.8, 9.6, 19.2, 56, 64 Kbps)

(A) Standard Arrangements

Special Access Line (End User CDL)

Jurisdiction	All Speeds Nonrecurring Charge	2.4, 4.8, 9.6, 19.2, 56, 64 Kbps Monthly Rate	
California			(C)
All Price Bands	$4,922.34	$2,625.17	
Florida	4,922.34	1,981.79	
Texas			
All Price Bands	4,922.34	2,122.59	(C)

© 2024 Frontier Communications Parent, Inc. All rights reserved.

5. SPECIAL ACCESS (Cont'd)

5.7 Rates and Charges (Cont'd)

5.7.5 Digital Data Service Facilities (Cont'd)
(2.4, 4.8, 9.6, 19.2, 56, 64 Kbps)

(A) Standard Arrangements (Cont'd)
(B)

Jurisdiction	Special Transport Per Airline Mile Monthly Rate	Special Access Line (IC CDL) Nonrecurring Charge	Special Access Line (IC CDL) Two & Four Wire Monthly Rate	
California				C
All Price Bands	$154.52	$3,937.87	$2,625.17	
Florida				
All Price Bands	78.75	3,937.87	1,986.31	
Texas				
All Price Bands	97.52	3,937.87	2,122.59	C

© 2024 Frontier Communications Parent, Inc. All rights reserved.

5. SPECIAL ACCESS (Cont'd)

5.7 Rates and Charges (Cont'd)

5.7.5 Digital Data Service Facilities (Cont'd)
(2.4, 4.8, 9.6, 19.2, 56, 64 Kbps)

(B) DDS Optional Payment Plan#

		Special Access Line (End User CDL) 2.4, 4.8, 9.6, 19.2 Kbps Monthly Rates		
Jurisdiction	All Speeds Nonrecurring Charge	1 Year MRC	3 Year MRC	5 Year MRC
California				
Price Band A	$0.00	$74.00	$64.00	$63.50
Price Band B	0.00	74.00	64.00	63.50
Price Band C	0.00	74.00	64.00	63.50
Florida	0.00	95.21	90.18	82.59
Texas				
Price Band A	0.00	74.00	64.00	63.50
Price Band B	0.00	74.00	64.00	63.50
Price Band C	0.00	74.00	64.00	63.50

DDS Optional Payment Plan Rates are no longer permitted. DDS Optional Payment Plan Rates in effect as of November 19, 2021 may continue the existing term but will not be eligible to extend, renew, reenroll in, convert to a new term period, or in any other way continue their existing plan beyond its current expiration. At expiration of the term the service will convert to the Month to Month Rate. If at any time an existing customer terminates its DDS Optional Payment Plan Rates, the customer may not re-subscribe to the rate.

© 2022 Frontier Communications Parent, Inc. All rights reserved.

5. SPECIAL ACCESS (Cont'd)

5.7 Rates and Charges (Cont'd)

5.7.5 Digital Data Service Facilities (Cont'd)
(2.4, 4.8, 9.6, 19.2, 56, 64 Kbps)

(B) DDS Optional Payment Plan# (Cont'd)

Special Access Line (IC CDL)

		2.4, 4.8, 9.6, 19.2 Kbps Monthly Rates		
Jurisdiction	All Speeds Nonrecurring Charge	1 Year MRC	3 Year MRC	5 Year MRC
California				
Price Band A	$0.00	$74.00	$64.00	$63.50
Price Band B	0.00	74.00	64.00	63.50
Price Band C	0.00	74.00	64.00	63.50
Florida				
Price Band A	0.00	74.00	64.00	63.50
Price Band B	0.00	74.00	64.00	63.50
Price Band C	0.00	74.00	64.00	63.50
Texas				
Price Band A	0.00	74.00	64.00	63.50
Price Band B	0.00	74.00	64.00	63.50
Price Band C	0.00	74.00	64.00	63.50

See Footnote on Page 5-233

© 2022 Frontier Communications Parent, Inc. All rights reserved.

5. SPECIAL ACCESS (Cont'd)

5.7 Rates and Charges (Cont'd)

5.7.5 Digital Data Service Facilities (Cont'd)
(2.4, 4.8, 9.6, 19.2, 56, 64 Kbps)

(B) DDS Optional Payment Plan# (Cont'd)

	Special Access Line (End User CDL) 56, 64 Kbps Monthly Rates		
Jurisdiction	1 Year MRC	3 Year MRC	5 Year MRC
California			
Price Band A	$94.00	$84.00	$80.60
Price Band B	94.00	84.00	80.60
Price Band C	94.00	84.00	80.60
Florida	100.35	98.53	96.34
Texas			
Price Band A	94.00	84.00	80.60
Price Band B	94.00	84.00	80.60
Price Band B	94.00	84.00	80.60

See Footnote on Page 5-233

© 2022 Frontier Communications Parent, Inc. All rights reserved.

5. SPECIAL ACCESS (Cont'd)

5.7 Rates and Charges (Cont'd)

5.7.5 Digital Data Service Facilities (Cont'd)
(2.4, 4.8, 9.6, 19.2, 56, 64 Kbps)

(B) DDS Optional Payment Plan# (Cont'd)

	Special Access Line (IC CDL) 56, 64 Kbps Monthly Rates		
Jurisdiction	1 Year MRC	3 Year MRC	5 Year MRC
California			
Price Band A	$94.00	$84.00	$80.60
Price Band B	94.00	84.00	80.60
Price Band C	94.00	84.00	80.60
Florida			
Price Band A	94.00	84.00	80.60
Price Band B	94.00	84.00	80.60
Price Band C	94.00	84.00	80.60
Texas			
Price Band A	94.00	84.00	80.60
Price Band B	94.00	84.00	80.60
Price Band B	94.00	84.00	80.60

See Footnote on Page 5-233

© 2022 Frontier Communications Parent, Inc. All rights reserved.

5. SPECIAL ACCESS (Cont'd)

5.7 Rates and Charges (Cont'd)

5.7.5 Digital Data Service Facilities (Cont'd)
(2.4, 4.8, 9.6, 19.2, 56, 64 Kbps)

(C) Optional Arrangements

	Supplemental Features	
Jurisdiction	DDS Bridging (Per Port) Monthly Rate	Secondary Channel Monthly Rate
California		
Price Bands A, B, and C	11.00	7.00
Florida		
Price Bands A, B, and C	11.00	7.00
Texas		
Price Bands A, B, and C	11.00	7.00

© 2022 Frontier Communications Parent, Inc. All rights reserved.

5. SPECIAL ACCESS (Cont'd)

5.7 Rates and Charges (Cont'd)

5.7.5.1 RESERVED FOR FUTURE USE

© 2022 Frontier Communications Parent, Inc. All rights reserved.

FACILITIES FOR INTERSTATE ACCESS

5. SPECIAL ACCESS (Cont'd)

5.7 Rates and Charges (Cont'd)

5.7.6 Multiplexing Arrangements

Jurisdiction	DS1 to Voice Nonrecurring Charge	DS1 to Voice Monthly Rate	
California			
All Price Bands	$12,601.09	$2,804.98	(C)
Florida			
All Price Bands	12,601.09	3,756.78	
Texas			
All Price Bands	12,601.09	3,945.38	(C)

© 2024 Frontier Communications Parent, Inc. All rights reserved.

5. SPECIAL ACCESS (Cont'd)

5.7 Rates and Charges (Cont'd)

5.7.6 Multiplexing Arrangements (Cont'd)

Jurisdiction	DS3 to DS1 and/or E1** Nonrecurring Charge	DS3 to DS1 and/or E1** Monthly Rate	
California			
All Price Bands	$7,088.12	$3,927.02	(C)
Florida			
Price Bands	7,088.12	6,516.68	
Texas			
Price Bands	7,088.12	8,795.71	(C)

** Where E1 service is available.

© 2024 Frontier Communications Parent, Inc. All rights reserved.

5. SPECIAL ACCESS (Cont'd)

5.7 Rates and Charges (Cont'd)

5.7.6 Multiplexing Arrangements (Cont'd)

Jurisdiction	Digital Data Carrier Multiplexer Nonrecurring Charge	Monthly Rate	
California, Florida Texas			
All Price Bands	$23,627.04	$4,331.64	(C)

© 2024 Frontier Communications Parent, Inc. All rights reserved.

5. SPECIAL ACCESS (Cont'd)

5.7 Rates and Charges (Cont'd)

5.7.6 Multiplexing Arrangements (Cont'd)

	Digital Data Subrate Multiplexer				
	One DSO to Twenty 2.4 Kbps		One DSO to Ten 4.8 Kbps		
Jurisdiction	Nonrecurring Charge	Monthly Rate	Nonrecurring Charge	Monthly Rate	
California, Florida Texas					
All Price Bands	$12,601.09	$2,520.22	$12,601.09	$1,809.15	(C)

© 2024 Frontier Communications Parent, Inc. All rights reserved.

5. SPECIAL ACCESS (Cont'd)

5.7 Rates and Charges (Cont'd)

5.7.6 Multiplexing Arrangements (Cont'd)

Digital Data Subrate Multiplexer
One DSO Port to Five 9.6 Kbps

Jurisdiction	Nonrecurring Charge	Monthly Rate	
California, Florida Texas			
All Price Bands	$12,601.09	$1,575.13	(C)

© 2024 Frontier Communications Parent, Inc. All rights reserved.

5. SPECIAL ACCESS (Cont'd)

5.7 Rates and Charges (Cont'd)

5.7.6 Multiplexing Arrangements (Cont'd)

DS3 Premises Multiplexer
(Per Arrangement)

Jurisdiction	Nonrecurring Charge	Monthly Rate	
California, Florida Texas			
All Zones	$8,269.47	$7,875.67	(C)

© 2024 Frontier Communications Parent, Inc. All rights reserved.

5. SPECIAL ACCESS (Cont'd)

5.7 Rates and Charges (Cont'd)

5.7.7 High Capacity DS1 (1.544 Mbps) Facilities

(A) Standard Arrangements

Special Access Line (End User CDL)

Jurisdiction	Nonrecurring Charge	Monthly Rate	
California			(C)
All Price Bands	$8,860.21	$4,696.79	
Florida	8,860.21	3,519.57	
Texas			
Price Band A,B,C	8,860.21	4,696.79	
Price Band D	8,860.21	5,102.37	(C)

© 2024 Frontier Communications Parent, Inc. All rights reserved.

5. SPECIAL ACCESS (Cont'd)

5.7 Rates and Charges (Cont'd)

5.7.7 High Capacity DS1 (1.544 Mbps) Facilities (Cont'd)

(A) Standard Arrangements (Cont'd)

Jurisdiction	Special Access Line (IC CDL) Nonrecurring Charge	Monthly Rate	
California, Florida Texas			
All Price Bands	$7,088.12	$4,696.79	C

© 2024 Frontier Communications Parent, Inc. All rights reserved.

5. SPECIAL ACCESS (Cont'd)

5.7 Rates and Charges (Cont'd)

5.7.7 High Capacity DS1 (1.544 Mbps) Facilities (Cont'd)

(A) Standard Arrangements (Cont'd)

Jurisdiction	Special Transport Termination Monthly Rate	Special Transport (Per Airline Mile) Monthly Rate	
California			
All Price Bands	$642.76	$217.11	(C)
Florida			
All Price Bands	569.38	190.27	
Texas			
All Price Bands	737.99	247.09	(C)

© 2024 Frontier Communications Parent, Inc. All rights reserved.

5. SPECIAL ACCESS (Cont'd)

5.7 Rates and Charges (Cont'd)

5.7.7 High Capacity DS1 (1.544 Mbps) Facilities (Cont'd)

(B) Optional Arrangements (Cont'd)

MetroLAN - Special Transport per DS1, FiberConnect/LAN Traversed#

Jurisdiction	One Year Monthly Rate	Two Year Monthly Rate	Three Year Monthly Rate	
California				(C)
All Price Bands	484.77	484.77	484.77	
Florida, Texas				
All Price Bands	545.41	545.41	545.41	(C)

Service availability limited. Refer to # footnote on Page 5-143.

© 2024 Frontier Communications Parent, Inc. All rights reserved.

5. SPECIAL ACCESS (Cont'd)

5.7 Rates and Charges (Cont'd)

5.7.7 High Capacity DS1 (1.544 Mbps) Facilities (Cont'd)

(B) Optional Arrangements (Cont'd)

MetroLAN - Special Transport per DS1, FiberConnect/LAN Traversed# (Cont'd)

Jurisdiction	Five Year Monthly Rate	Eight Year Monthly Rate	Ten Year Monthly Rate	
California				(C)
All Price Bands	484.77	484.77	484.77	
Florida, Texas				
All Price Bands	545.41	545.41	545.41	(C)

Service availability limited. Refer to # footnote on Page 5-143.

© 2024 Frontier Communications Parent, Inc. All rights reserved.

5. SPECIAL ACCESS (Cont'd)

5.7 Rates and Charges (Cont'd)

5.7.7 High Capacity DS1 (1.544 Mbps) Facilities (Cont'd)

(B) Optional Arrangements (Cont'd)

Supplemental Features
Automatic Protection Switching

Jurisdiction	Nonrecurring Charge	Monthly Rate
California		
Price Band A	$700.00	$100.00
Price Band B	700.00	100.00
Price Band C	700.00	100.00
Florida		
Price Band A	700.00	100.00
Price Band B	700.00	100.00
Price Band C	700.00	100.00
Texas		
Price Band A	700.00	100.00
Price Band B	700.00	100.00
Price Band C	700.00	100.00

© 2022 Frontier Communications Parent, Inc. All rights reserved.

5. SPECIAL ACCESS (Cont'd)

5.7 Rates and Charges (Cont'd)

5.7.8 High Capacity Digital FiberConnect (4 X 1.544 Mbps) Facilities

(A) FiberConnect Optional Payment Plan

Special Access Line - Electrical Interface (End User CDL)

Jurisdiction	Nonrecurring Charge	One Year Monthly Rate	Three Year Monthly Rate	Five Year Monthly Rate
California				
Price Band A	$1,250.00	$ 968.00	$ 716.00	$ 572.00
Price Band B	1,250.00	968.00	716.00	572.00
Price Band C	1,250.00	968.00	716.00	572.00
Florida				
Competitive	1,250.00	888.00	656.00	524.00
Texas				
Price Band A	$1,250.00	$ 908.00	$ 672.00	$ 536.00
Price Band B	1,250.00	908.00	672.00	536.00
Price Band C	1,250.00	908.00	672.00	536.00

© 2022 Frontier Communications Parent, Inc. All rights reserved.

5. SPECIAL ACCESS (Cont'd)

5.7 Rates and Charges (Cont'd)

5.7.8 High Capacity Digital FiberConnect (4 X 1.544 Mbps) Facilities (Cont'd)

(A) FiberConnect Optional Payment Plan (Cont'd)

Special Access Line - Electrical Interface (IC CDL)

Jurisdiction	Nonrecurring Charge	One Year Monthly Rate	Three Year Monthly Rate	Five Year Monthly Rate
California				
Price Band A	$1,000.00	$ 968.00	$716.00	$572.00
Price Band B	1,000.00	968.00	716.00	572.00
Price Band C	1,000.00	968.00	716.00	572.00
Florida				
Price Band A	1,000.00	888.00	656.00	524.00
Price Band B	1,000.00	888.00	656.00	524.00
Price Band C	1,000.00	888.00	656.00	524.00
Texas				
Price Band A	$1,000.00	$ 908.00	$ 672.00	$ 536.00
Price Band B	1,000.00	908.00	672.00	536.00
Price Band C	1,000.00	908.00	672.00	536.00

5.7.9 Reserved for Future Use

© 2022 Frontier Communications Parent, Inc. All rights reserved.

5. SPECIAL ACCESS (Cont'd)

5.7 Rates and Charges (Cont'd)

5.7.10 High Capacity Digital DS3 (44.736 Mbps) Facilities - Three System##

(A) Protected DS3 - With Telephone Company Electronics

First Special Access Line - (End User CDL)

Jurisdiction	Nonrecurring Charge	
All States	$3,125.00	(C)

Jurisdiction	Month to Month Rate ###	One Year # Monthly Rate	Three Year # Monthly Rate	Five Year # Monthly Rate	Seven Year # Monthly Rate	
California						
Price Band A	$1,686.46	$1,686.46	$1,380.12	$1,203.84	$1,102.40	
Price Band B	1,725.68	1,725.68	1,412.98	1,233.20	1,129.96	
Price Band C	1,764.90	1,764.90	1,445.84	1,262.57	1,157.52	
Florida						
Competitive	1,628.00	1,628.00	1,364.00	1,218.80	1,144.00	
Texas						
Price Band A	1,686.46	1,686.46	1,380.12	1,203.84	1,102.40	
Price Band B	1,725.68	1,725.68	1,412.98	1,233.20	1,129.96	
Price Band C	1,764.90	1,764.90	1,445.84	1,262.57	1,157.52	(C)

Effective July 26, 2022 DS3 Service billing at the Month to Month rate will convert to the DS3 Individual System Month to Month rate. In addition, at the expiration of a Service Period, the DS3 service will convert to the Individual System Month to Month rate.

Service availability limited. Refer to # footnote on Page 5-95.

Effective November 19, 2021, DS3 Term Rates are no longer permitted. DS3 Term Rates in effect as of November 19, 2021 may continue the existing term but will not be eligible to extend, renew, reenroll in, convert to a new term period, or in any other way continue their existing plan beyond its current expiration. At expiration of the term the service will convert to the Month to Month Rate. If at any time an existing customer terminates its DS3 Term Rates, the customer may not re-subscribe to the rate.

© 2022 Frontier Communications Parent, Inc. All rights reserved.

5. SPECIAL ACCESS (Cont'd)

5.7 Rates and Charges (Cont'd)

5.7.10 High Capacity Digital DS3 (44.736 Mbps) Facilities - Three System## (Cont'd)

(A) Protected DS3 - With Telephone Company Electronics (Cont'd)

First Special Access Line - (IC CDL)

Jurisdiction	Nonrecirring Charge	
All States	$2,500.00	(C)

Jurisdiction	Month to Month Rate ###	One Year # Monthly Rate	Three Year # Monthly Rate	Five Year # Monthly Rate	Seven Year # Monthly Rate	
California						
Price Band A	$1,686.46	$1,686.46	$1,380.12	$1,203.84	$1,102.40	
Price Band B	1,725.68	1,725.68	1,412.98	1,233.20	1,129.96	
Price Band C	1,764.90	1,764.90	1,445.84	1,262.57	1,157.52	
Florida						
Price Band A	1,686.46	1,686.46	1,380.12	1,203.84	1,102.40	
Price Band B	1,725.68	1,725.68	1,412.98	1,233.20	1,129.96	
Price Band C	1,764.90	1,764.90	1,445.84	1,262.57	1,157.52	
Texas						(C)
Price Band A	1,686.46	1,686.46	1,380.12	1,203.84	1,102.40	
Price Band B	1,725.68	1,725.68	1,412.98	1,233.20	1,129.96	
Price Band C	1,764.90	1,764.90	1,445.84	1,262.57	1,157.52	

Service Offer is further limited. See footnote on page 5-253

Service availability limited. Refer to # footnote on Page 5-95.

Service Offer is Limited. See Footnote on Page 5-253

© 2022 Frontier Communications Parent, Inc. All rights reserved.

© 2022 Frontier Communications Parent, Inc. All rights reserved.

FACILITIES FOR INTERSTATE ACCESS

5. SPECIAL ACCESS (Cont'd)

5.7 Rates and Charges (Cont'd)

5.7.10 High Capacity Digital DS3 (44.736 Mbps) Facilities - Three System## (Cont'd)

(A) Protected DS3 - With Telephone Company Electronics (Cont'd)

Each Additional Special Access Line - Maximum of 2 -(End User CDL)

Jurisdiction	Nonrecurring Charge	
All States	$1,250.00	(C)

Jurisdiction	Month To Month Rate ###	One Year # Monthly Rate	Three Year # Monthly Rate	Five Year # Monthly Rate	Seven Year # Monthly Rate	
California						
Price Band A	$1,264.90	$1,264.90	$1,035.09	$902.91	$826.80	
Price Band B	1,294.26	1,294.26	1,059.79	924.96	847.47	
Price Band C	1,323.73	1,323.73	1,084.38	947.00	868.14	
Florida						
Competitive	1,221.00	1,221.00	1,023.00	914.10	858.00	
Texas						
Price Band A	1,264.90	1,264.90	1,035.09	902.91	826.80	
Price Band B	1,294.26	1,294.26	1,059.79	924.96	847.47	
Price Band C	1,323.73	1,323.73	1,084.38	947.00	868.14	(C)

Service Offer is further limited. See footnote on Page 5-253

Service availability limited. Refer to # footnote on Page 5-95.

Service Offer is Limited. See Footnote on Page 5-253

© 2022 Frontier Communications Parent, Inc. All rights reserved.

5. SPECIAL ACCESS (Cont'd)

5.7 Rates and Charges (Cont'd)

5.7.10 High Capacity Digital DS3 (44.736 Mbps) Facilities - Three System## (Cont'd)

(A) Protected DS3 - With Telephone Company Electronics (Cont'd)

Each Additional Special Access Line - Maximum of 2 -(IC CDL)

Jurisdiction	Nonrecurring Charge	
All States	$1,000.00	(C)

Jurisdiction	Month To Month Rate ###	One Year # Monthly Rate	Three Year # Monthly Rate	Five Year # Monthly Rate	Seven Year # Monthly Rate	
California						
Price Band A	$1,264.90	$1,264.90	$ 1,035.09	$902.91	$826.80	
Price Band B	1,294.26	1,294.26	1,059.79	924.96	847.47	
Price Band C	1,323.73	1,323.73	1,084.38	947.00	868.14	
Florida						
Price Band A	1,264.90	1,264.90	1,035.09	902.91	826.80	
Price Band B	1,294.26	1,294.26	1,059.79	924.96	847.47	
Price Band C	1,323.73	1,323.73	1,084.38	947.00	868.14	
Texas						
Price Band A	1,264.90	1,264.90	1,035.09	902.91	826.80	
Price Band B	1,294.26	1,294.26	1,059.79	924.96	847.47	(C)
Price Band C	1,323.73	1,323.73	1,084.38	947.00	868.14	

Service Offer is further limited. See footnote on Page 5-253

Service availability limited. Refer to # footnote on Page 5-95.

Service Offer is Limited. See Footnote on Page 5-253

© 2022 Frontier Communications Parent, Inc. All rights reserved.

FACILITIES FOR INTERSTATE ACCESS

5. SPECIAL ACCESS (Cont'd)

5.7 Rates and Charges (Cont'd)

5.7.10 High Capacity Digital DS3 (44.736 Mbps) Facilities - Three System## (Cont'd)

(B) Protected DS3 - Without Telephone Company Electronics

First Special Access Line - (End User CDL)

Jurisdiction	Nonrecurring Charge	
All States	$2,343.75	(C)

Jurisdiction	Month to Month Rate ###	One Year # Monthly Rate	Three Year # Monthly Rate	Five Year # Monthly Rate	Seven Year # Monthly Rate	
California						
Price Band A	$1,291.08	$1,291.08	$1,061.80	$ 912.66	$ 838.20	
Price Band B	1,321.08	1,321.08	1,087.14	934.92	859.24	
Price Band C	1,351.18	1,351.18	1,112.36	957.18	880.12	
Florida	1,246.30	1,246.30	1,049.40	924.00	869.83	
Texas						
Price Band A	1,291.08	1,291.08	1,061.80	912.66	838.20	
Price Band B	1,321.08	1,321.08	1,087.14	934.92	859.24	
Price Band C	1,351.18	1,351.18	1,112.36	957.18	880.12	(C)

Service Offer is Further Limited. See footnotge on Page 5-253

Service availability limited. Refer to # footnote on Page 5-95.

Service Offer is Limited. See Footnote on Page 5-253

© 2022 Frontier Communications Parent, Inc. All rights reserved.

FACILITIES FOR INTERSTATE ACCESS

5. SPECIAL ACCESS (Cont'd)

5.7 Rates and Charges (Cont'd)

5.7.10 High Capacity Digital DS3 (44.736 Mbps) Facilities - Three System## (Cont'd)

(B) Protected DS3 - Without Telephone Company Electronics (Cont'd)

First Special Access Line - (IC CDL)

Jurisdiction	Nonrecurring Charge	
All States	$1,875.00	(C)

Jurisdiction	Month to Month Rate ###	One Year # Monthly Rate	Three Year # Monthly Rate	Five Year # Monthly Rate	Seven Year # Monthly Rate	
California						
Price Band A	$1,291.08	$1,291.08	$1,061.80	$912.66	$838.20	
Price Band B	1,321.08	1,321.08	1,087.14	934.92	859.24	
Price Band C	1,351.18	1,351.18	1,112.36	957.18	880.12	
Florida						
Price Band A	1,291.08	1,291.08	1,061.80	912.66	838.20	
Price Band B	1,321.08	1,321.08	1,087.14	934.92	859.24	
Price Band C	1,351.18	1,351.18	1,112.36	957.18	880.12	
Texas						
Price Band A	$1,291.08	$1,291.08	$1,061.80	$912.66	$838.20	
Price Band B	1,321.08	1,321.08	1,087.14	934.92	859.24	(C)
Price Band C	1,351.18	1,351.18	1,112.36	957.18	880.12	

Service Offer is Further Limited. See footnote on Page 5-253

Service availability limited. Refer to # footnote on Page 5-95.

Service Offer is Limited. See Footnote on Page 5-253

© 2022 Frontier Communications Parent, Inc. All rights reserved.

5. SPECIAL ACCESS (Cont'd)

5.7 Rates and Charges (Cont'd)

5.7.10 High Capacity Digital DS3 (44.736 Mbps) Facilities - Three System## (Cont'd)

(B) Protected DS3 - Without Telephone Company Electronics (Cont'd)

Each Additional Special Access Line - Maximum of 2 -(End User CDL)

Jurisdiction	Nonrecurring Charge	
All States	$937.50	(C)

Jurisdiction	Month to Month Rate ###	One Year # Monthly Rate	Three Year # Monthly Rate	Five Year # Monthly Rate	Seven Year # Monthly Rate	
California						
Price Band A	$968.31	$968.31	$796.38	$684.55	$628.58	
Price Band B	990.89	990.89	815.35	701.19	644.37	
Price Band C	1,013.36	1,013.36	834.33	717.94	660.06	
Florida	934.73	934.73	787.05	693.00	652.30	
Texas						
Price Band A	968.31	968.31	796.38	684.55	628.58	(C)
Price Band B	990.89	990.89	815.35	701.19	644.37	
Price Band C	1,013.36	1,013.36	834.33	717.94	660.06	

Service Offer is Further Limited See Footnote on Page 5-253

Service availability limited. Refer to # footnote on Page 5-95.

Service Offer is Limited. See Footnote on Page 5-253

© 2022 Frontier Communications Parent, Inc. All rights reserved.

5. SPECIAL ACCESS (Cont'd)

5.7 Rates and Charges (Cont'd)

5.7.10 High Capacity Digital DS3 (44.736 Mbps) Facilities - Three System## (Cont'd)

(B) Protected DS3 - Without Telephone Company Electronics (Cont'd)

Each Additional Special Access Line - Maximum of 2 -(IC CDL)

Jurisdiction	Nonrecurring Charge	
All States	$750.00	(C)

Jurisdiction	Month to Month Rate ###	One Year # Monthly Rate	Three Year # Monthly Rate	Five Year # Monthly Rate	Seven Year # Monthly Rate	
California						
Price Band A	$968.31	$968.31	$796.38	$684.55	$628.58	
Price Band B	990.89	990.89	815.35	701.19	644.37	
Price Band C	1,013.36	1,013.36	834.33	717.94	660.06	
Florida						
Price Band A	968.31	968.31	796.38	684.55	628.58	
Price Band B	990.89	990.89	815.35	701.19	644.37	
Price Band C	1,013.36	1,013.36	834.33	717.94	660.06	
Texas						
Price Band A	968.31	968.31	796.38	684.55	628.58	(C)
Price Band B	990.89	990.89	815.35	701.19	644.37	
Price Band C	1,013.36	1,013.36	834.33	717.94	660.06	

Service is Further Limited. See Footnote on Page 5-253

Service availability limited. Refer to # footnote on Page 5-95.

Service Offer is Limited. See Footnote on Page 5-253

© 2022 Frontier Communications Parent, Inc. All rights reserved.

5. SPECIAL ACCESS (Cont'd)

5.7 Rates and Charges (Cont'd)

5.7.11 High Capacity Digital DS3 (44.736 Mbps) Facilities - Unlimited System##

(A) Protected DS3 - With Telephone Company Electronics

First Special Access Line (End User CDL)

Jurisdiction	Nonrecurring Charge
All States	$53,596.35

(C)

Jurisdiction	Month to Month Rate ###	One Year # Monthly Rate	Three Year # Monthly Rate	Five Year # Monthly Rate	Seven Year # Monthly Rate
California, Texas					
All Price Bands	$48,199.93	$48,199.93	$40,060.36	$35,311.36	$30,741.15
Florida	$44,460.66	$44,460.66	$37,792.12	$34,087.11	$30,382.05

(C)

Service Offer is Further Limited. See Footnote on Page 5-253

Service availability limited. Refer to # footnote on Page 5-95.

Service Offer is Limited. See Footnote on Page 5-253

© 2024 Frontier Communications Parent, Inc. All rights reserved.

FACILITIES FOR INTERSTATE ACCESS

5. SPECIAL ACCESS (Cont'd)

5.7 Rates and Charges (Cont'd)

5.7.11 High Capacity Digital DS3 (44.736 Mbps) Facilities - Unlimited System## (Cont'd)

(A) Protected DS3 - With Telephone Company Electronics (Cont'd)

First Special Access Line (IC CDL)

Jurisdiction	Nonrecurring Charge	
All States	$42,877.08	(C)

Jurisdiction	Month to Month Rate ###	One Year # Monthly Rate	Three Year # Monthly Rate	Five Year # Monthly Rate	Seven Year # Monthly Rate
California, Florida Texas					
All Price Bands	$48,199.93	$48,199.93	$40,060.36	$35,311.36	$30,741.15

(C)

Service Offer is Further Limited. See Footnote on Page 5-253

Service availability limited. Refer to # footnote on Page 5-95.

Service Offer is Limited. See Footnote on Page 5-253

© 2024 Frontier Communications Parent, Inc. All rights reserved.

5. SPECIAL ACCESS (Cont'd)

5.7 Rates and Charges (Cont'd)

5.7.11 High Capacity Digital DS3 (44.736 Mbps) Facilities - Unlimited System## (Cont'd)

(A) Protected DS3 - With Telephone Company Electronics (Cont'd)

Each Additional Special Access Line (End User CDL)

Jurisdiction	Nonrecurring Charge	
All States	$ 11,910.29	(C)

Jurisdiction	Month to Month Rate ###	One Year # Monthly Rate	Three Year # Monthly Rate	Five Year # Monthly Rate	Seven Year # Monthly Rate
California, Texas					
All Price Bands	$5,113.60	$5,113.60	$4,402.54	$3,963.20	$3,616.81
Florida	$4,716.50	$4,716.50	$4,153.19	$3,825.60	$3,574.02

(C)

Service Offer is Further Limited. See Footnote on Page 5-253

Service availability limited. Refer to # footnote on Page 5-95.

Service Offer is Limited. See Footnote on Page 5-253

© 2024 Frontier Communications Parent, Inc. All rights reserved.

5. SPECIAL ACCESS (Cont'd)

5.7 Rates and Charges (Cont'd)

5.7.11 High Capacity Digital DS3 (44.736 Mbps) Facilities - Unlimited System## (Cont'd)

(A) Protected DS3 - With Telephone Company Electronics (Cont'd)

Each Additional Special Access Line (IC CDL)

Jurisdiction	Nonrecurring Charge
All States	$11,910.29

(C)

Jurisdiction	Month to Month Rate ###	One Year # Monthly Rate	Three Year # Monthly Rate	Five Year # Monthly Rate	Seven Year # Monthly Rate
California, Texas Florida					
All Price Bands	$5,113.60	$5,113.60	$4,402.54	$3,963.20	$3,616.81

(C)

Service Offer is Further Limited. See Footnote on Page 5-253

Service availability limited. Refer to # footnote on Page 5-95.

Service Offer is Limited. See Footnote on Page 5-253

© 2024 Frontier Communications Parent, Inc. All rights reserved.

5. SPECIAL ACCESS (Cont'd)

5.7 Rates and Charges (Cont'd)

5.7.11 High Capacity Digital DS3 (44.736 Mbps) Facilities - Unlimited System## (Cont'd)

(B) Protected DS3 - Without Telephone Company Electronics

First Special Access Line (End User CDL)

Jurisdiction	Nonrecurring Charge	
All States	$40,197.25	(C)

Jurisdiction	Month to Month Rate ###	One Year # Monthly Rate	Three Year # Monthly Rate	Five Year # Monthly Rate	Seven Year # Monthly Rate
California, Texas					
All Price Bands	$32,809.62	$32,809.62	$27,266.76	$24,035.81	$20,924.01
Florida	$30,261.48	$30,261.48	$25,723.21	$23,202.48	$20,679.15

(C)

Service Offer is Further Limited See Footnote on Page 5-253

Service availability limited. Refer to # footnote on Page 5-95.

Service Offer is Limited. See Footnote on Page 5-253

© 2024 Frontier Communications Parent, Inc. All rights reserved.

5. SPECIAL ACCESS (Cont'd)

5.7 Rates and Charges (Cont'd)

5.7.11 High Capacity Digital DS3 (44.736 Mbps) Facilities - Unlimited System## (Cont'd)

(B) Protected DS3 - Without Telephone Company Electronics (Cont'd)

First Special Access Line (IC CDL)

Jurisdiction	Nonrecurring Charge
All States	$32,157.82

(C)

Jurisdiction	Month to Month Rate ###	One Year # Monthly Rate	Three Year # Monthly Rate	Five Year # Monthly Rate	Seven Year # Monthly Rate
California, Texas Florida					
All Price Bands	$32,809.62	$32,809.62	$27,266.76	$24,035.81	$20,924.01

(C)

Service Offer is Further Limited. See Footnote on Page 5-253

Service availability limited. Refer to # footnote on Page 5-95.

Service Offer is Limited. See Footnote on Page 5-253

© 2024 Frontier Communications Parent, Inc. All rights reserved.

5. SPECIAL ACCESS (Cont'd)

5.7 Rates and Charges (Cont'd)

5.7.11 High Capacity Digital DS3 (44.736 Mbps) Facilities - Unlimited System## (Cont'd)

(B) Protected DS3 - Without Telephone Company Electronics (Cont'd)

Each Additional Special Access Line (End User CDL)

Jurisdiction	Nonrecurring Charge
All States	$8,932.73

(C)

Jurisdiction	Month to Month Rate ###	One Year # Monthly Rate	Three Year # Monthly Rate	Five Year # Monthly Rate	Seven Year # Monthly Rate
California, Texas					
All Price Bands	$4,966.10	$4,966.10	$4,341.94	$3,613.77	$3,336.03
Florida	$4,580.24	$4,580.24	$4,095.50	$3,487.62	$3,296.31

(C)

Service Offer is Further Limited. See Footnote on Page 5-253

Service availability limited. Refer to # footnote on Page 5-95.

Service Offer is Limited. See Footnote on Page 5-253

© 2024 Frontier Communications Parent, Inc. All rights reserved.

5. SPECIAL ACCESS (Cont'd)

5.7 Rates and Charges (Cont'd)

5.7.11 High Capacity Digital DS3 (44.736 Mbps) Facilities - Unlimited System## (Cont'd)

(B) Protected DS3 - Without Telephone Company Electronics (Cont'd)

Each Additional Special Access Line (IC CDL)

Jurisdiction	Nonrecurring Charge
All States	$7,146.18

(C)

Jurisdiction	Month to Month Rate ###	One Year # Monthly Rate	Three Year # Monthly Rate	Five Year # Monthly Rate	Seven Year # Monthly Rate
California, Texas Florida					
All Price Bands	$4,966.10	$4,966.10	$4,341.94	$3,613.77	$3,336.03

(C)

Service Offer is Further Limited. See Footnote on Page 5-253

Service availability limited. Refer to # footnote on Page 5-95.

Service Offer is Limited. See Footnote on Page 5-253

© 2024 Frontier Communications Parent, Inc. All rights reserved.

5. SPECIAL ACCESS (Cont'd)

5.7 Rates and Charges (Cont'd)

5.7.12 High Capacity Digital DS3 (44.736 Mbps) Facilities - Individual System

(A) Protected DS3 Individual - With Telephone Company Electronics

Each Special Access Line (End User CDL)

Jurisdiction	Nonrecurring Charge
All States	$19,689.22

(C)

Jurisdiction	Month to Month Rate ##	One Year # Monthly Rate	Three Year # Monthly Rate	Five Year # Monthly Rate	Seven Year # Monthly Rate
California					
All Price Bands	$22,540.22	$22,540.22	$18,366.09	$15,975.17	$14,113.49
Florida	$19,445.14	$19,445.14	$16,460.21	$14,294.43	$13,774.63
Texas					
Price Band A, B, C	$22,540.22	$22,540.22	$18,366.09	$15,975.17	$14,113.49
Price Band D	$27,161.66	$27,161.66	$23,154.53	$20,855.52	$19,063.93

(C)

Effective November 19, 2021, DS3 Term Rates are no longer permitted. DS3 Term Rates in effect as of November 19, 2021 may continue the existing term but will not be eligible to extend, renew, reenroll in, convert to a new term period, or in any other way continue their existing plan beyond its current expiration. At expiration of the term the service will convert to the Month to Month Rate. If at any time an existing customer terminates its DS3 Term Rates, the customer may not re-subscribe to the rate.

Effective July 26, 2022 Any DS3 Service billing at the Month to Month rate will convert to the DS3 Individual System Month to Month rate. In addition, at the expiration of a Service Period, the DS3 service will convert to the Individual System Month to Month rate.

© 2024 Frontier Communications Parent, Inc. All rights reserved.

5. SPECIAL ACCESS (Cont'd)

5.7 Rates and Charges (Cont'd)

5.7.12 High Capacity Digital DS3 (44.736 Mbps) Facilities - Individual System (Cont'd)

(A) Protected DS3 Individual - With Tel,ephone Company Electronics (Cont'd)

Each Special Access Line (IC CDL)

Jurisdiction	Nonrecurring Charge	
All States	$15,751.38	(C)

Jurisdiction	Month to Month Rate ##	One Year # Monthly Rate	Three Year # Monthly Rate	Five Year # Monthly Rate	Seven Year # Monthly Rate	
California,Florida Texas						
All Price Bands	$22,540.22	$22,540.22	$18,366.09	$15,975.17	$14,113.49	(C)

Service Offer is limited. See footnote on page 5-269

Service Offer is Further Limited. See Footnote on Page 5-269

© 2024 Frontier Communications Parent, Inc. All rights reserved.

5. SPECIAL ACCESS (Cont'd)

5.7 Rates and Charges (Cont'd)

5.7.12 High Capacity Digital DS3 (44.736 Mbps) Facilities - Individual System (Cont'd)

(B) Protected DS3 Individual - Without Telephone Company Electronics

Each Special Access Line (End User CDL)

Jurisdiction	Nonrecurring Charge	
All States	$14,766.99	(C)

Jurisdiction	Month To Month Rate ##	One Year # Monthly Rate	Three Year # Monthly Rate	Five Year # Monthly Rate	Seven Year # Monthly Rate	
California, Texas						
All Price Bands	$16,624.67	$16,624.67	$13,315.40	$11,667.52	$9,431.79	
Florida	$14,766.99	$14,766.99	$12,561.79	$11,262.27	$9,321.66	(C)

Service Offer is limited. See footnote on page 5-269

Service Offer is Further Limited. See Footnote on Page 5-269

© 2024 Frontier Communications Parent, Inc. All rights reserved.

5. SPECIAL ACCESS (Cont'd)

5.7 Rates and Charges (Cont'd)

5.7.12 High Capacity Digital DS3 (44.736 Mbps) Facilities - Individual System (Cont'd)

(B) Protected DS3 Individual - Without Telephone Company Electronics (Cont'd)

Each Special Access Line (IC CDL)

Jurisdiction	Nonrecurring Charge	
All States	$11,813.53	(C)

Jurisdiction	Month To Month Rate ##	One Year # Monthly Rate	Three Year # Monthly Rate	Five Year # Monthly Rate	Seven Year # Monthly Rate	
California, Florida Texas						
All Price Bands	$16,624.67	$16,624.67	$13,315.40	$11,667.52	$9,431.79	(C)

Service Offer is limited. See footnote on page 5-269
Service Offer is Further Limited. See Footnote on Page 5-269

© 2024 Frontier Communications Parent, Inc. All rights reserved.

5. SPECIAL ACCESS (Cont'd)

5.7 Rates and Charges (Cont'd)

5.7.13 High Capacity Digital DS3 (44.736 Mbps) Facilities - Group Systems##

(A) Protected DS3 x 12 - With Telephone Company Electronics##

Per Group of 12 (End User CDL)##

Jurisdiction	Nonrecurring Charge
All States	$8,750.00

Jurisdiction	Month to Month Rate ###	One Year # Monthly Rate	Three Year # Monthly Rate	Five Year # Monthly Rate	Seven Year # Monthly Rate	(C)
All States	$9,295.00	$9,295.00	$7,700.00	$5,830.00	$4,950.00	

Effective July 26, 2022 Any DS3 Service billing at the Month to Month rate will convert to the DS3 Individual System Month to Month rate. In addition, at the expiration of a Service Period, the DS3 Service will convert to the Individual System Month to Month rate. (N)

Limited to those services so equipped and in service as of March 4, 1999.

Effective November 19, 2021, DS3 Term Rates are no longer permitted. DS3 Term Rates in effect as of November 19, 2021 may continue the existing term but will not be eligible to extend, renew, reenroll in, convert to a new term period, or in any other way continue their existing plan beyond its current expiration. At expiration of the term the service will convert to the Month to Month Rate. If at any time an existing customer terminates its DS3 Term Rates, the customer may not re-subscribe to the rate.

© 2022 Frontier Communications Parent, Inc. All rights reserved.

5. SPECIAL ACCESS (Cont'd)

5.7 Rates and Charges (Cont'd)

5.7.13 High Capacity Digital DS3 (44.736 Mbps) Facilities - Group Systems## (Cont'd)

(A) Protected DS3 x 12 - With Telephone Company Electronics## (Cont'd)

Per Group of 12 (IC CDL)##

Jurisdiction	Nonrecurring Charge
All States	$7,000.00

Jurisdiction	Month to Month Rate ###	One Year # Monthly Rate	Three Year# Monthly Rate	Five Yea r# Monthly Rate	Seven Year # Monthly Rate	(C)
All States	$8,957.00	$8,957.00	$7,420.00	$5,618.00	$4,770.00	

Service Offer is Further Limited. See Footnote on Page 5-273 (N)

Limited to those services so equipped and in service as of March 4, 1999.

Service Offer is limited. See footnote on page 5-273

© 2022 Frontier Communications Parent, Inc. All rights reserved.

FACILITIES FOR INTERSTATE ACCESS

5. SPECIAL ACCESS (Cont'd)

5.7 Rates and Charges (Cont'd)

5.7.13 High Capacity Digital DS3 (44.736 Mbps) Facilities - Group Systems##

(A) Protected DS3 x 12 - Without Telephone Company Electronics## (Cont'd)

Per Group of 12 (End User CDL)##

Jurisdiction	Nonrecurring Charge
All State	$6,562.50

Jurisdiction	Month to Month Rate ###	One Year # Monthly Rate	Three Year # Monthly Rate	Five Year # Monthly Rate	Seven Year # Monthly Rate	(C)
All States	$6,971.25	$6,971.25	$5,775.00	$4,372.50	$3,712.50	

Service Offer is Further Limited. See Footnote on Page 5-273 (N)

Limited to those services so equipped and in service as of March 4, 1999.

Service Offer is limited. See footnote on page 5-273

© 2022 Frontier Communications Parent, Inc. All rights reserved.

FACILITIES FOR INTERSTATE ACCESS

5. SPECIAL ACCESS (Cont'd)

5.7 Rates and Charges (Cont'd)

5.7.13 High Capacity Digital DS3 (44.736 Mbps) Facilities - Group Systems## (Cont'd)

(A) Protected DS3 x 12 - Without Telephone Company Electronics## (Cont'd)

Per Group of 12 (IC CDL)##

Jurisdiction	Nonrecurring Charge
All States	$5,250.00

Jurisdiction	Month to Month Rate ###	One Year # Monthly Rate	Three Year # Monthly Rate	Five Year # Monthly Rate	Seven Year # Monthly Rate	(C)
All States	$6,717.75	$6,717.75	$5,565.00	$4,213.50	$3,577.50	

Service Offer is Further Limited. See Footnote on Page 5-273 (N)

Limited to those services so equipped and in service as of March 4, 1999.

Service Offer is limited. See footnote on page 5-273

© 2022 Frontier Communications Parent, Inc. All rights reserved.

FACILITIES FOR INTERSTATE ACCESS

5. SPECIAL ACCESS (Cont'd)

5.7 Rates and Charges (Cont'd)

5.7.13 High Capacity Digital DS3 (44.736 Mbps) Facilities - Group Systems## (Cont'd)

(B) Protected DS3 x 24 - With Telephone Company Electronics##

Per Group of 24 (End User CDL)##

Jurisdiction	Nonrecurring Charge
All States	$15,000.00

Jurisdiction	Month to Month Rate ###	One Year # Monthly Rate	Three Year # Monthly Rate	Five Year # Monthly Rate	Seven Year # Monthly Rate	(C)
All States	$15,950.00	$15,950.00	$13,200.00	$9,900.00	$8,580.00	

Service Offer is Further Limited. See Footnote on Page 5-273 (N)

Limited to those services so equipped and in service as of March 4, 1999.

Service Offer is limited. See footnote on page 5-273

© 2022 Frontier Communications Parent, Inc. All rights reserved.

FACILITIES FOR INTERSTATE ACCESS

5. SPECIAL ACCESS (Cont'd)

5.7 Rates and Charges (Cont'd)

5.7.13 High Capacity Digital DS3 (44.736 Mbps) Facilities - Group Systems## (Cont'd)

(B) Protected DS3 x 24 - With Telephone Company Electronics## (Cont'd)

Per Group of 24 (IC CDL)##

Jurisdiction	Nonrecurring Charge
All States	$12,000.00

Jurisdiction	Month to Month Rate ###	One Year # Monthly Rate	Three Year # Monthly Rate	Five Year # Monthly Rate	Seven Year # Monthly Rate	(C)
All States	$15,370.00	$15,370.00	$12,720.00	$9,540.00	$8,268.00	

Service Offer is Further Limited. See Footnote on Page 5-273 (N)

Limited to those services so equipped and in service as of March 4, 1999.

Service Offer is limited. See footnote on page 5-273

© 2022 Frontier Communications Parent, Inc. All rights reserved.

FACILITIES FOR INTERSTATE ACCESS

5. SPECIAL ACCESS (Cont'd)

5.7 Rates and Charges (Cont'd)

5.7.13 High Capacity Digital DS3 (44.736 Mbps) Facilities - Group Systems## (Cont'd)

(B) Protected DS3 x 24 - Without Telephone Company Electronics## (Cont'd)

Per Group of 24 (End User CDL)##

Jurisdiction	Nonrecurring Charge
All State	$11,250

Jurisdiction	Month to Month Rate ###	One Year # Monthly Rate	Three Year # Monthly Rate	Five Year # Monthly Rate	Seven Year # Monthly Rate	(C)
All States	$11,962.50	$11,962.50	$9,900.00	$7,425.00	$6,435.00	

(N)

Service Offer is Further Limited. See Footnote on Page 5-273

Limited to those services so equipped and in service as of March 4, 1999.

Service Offer is limited. See footnote on page 5-273

© 2022 Frontier Communications Parent, Inc. All rights reserved.

5. SPECIAL ACCESS (Cont'd)

5.7 Rates and Charges (Cont'd)

5.7.13 High Capacity Digital DS3 (44.736 Mbps) Facilities - Group Systems## (Cont'd)

(B) Protected DS3 x 24 - Without Telephone Company Electronics## (Cont'd)

Per Group of 24 (IC CDL)##

Jurisdiction	Nonrecurring Charge
All States	$9,000.00

Jurisdiction	Month to Month Rate ###	One Year # Monthly Rate	Three Year # Monthly Rate	Five Year # Monthly Rate	Seven Year # Monthly Rate	
All States	$11,527.50	$11,527.50	$9,540.00	$7,155.00	$6,201.00	(C)

Service Offer is Further Limited. See Footnote on Page 5-273

(N)

Limited to those services so equipped and in service as of March 4, 1999.

Service Offer is limited. See footnote on page 5-273

© 2022 Frontier Communications Parent, Inc. All rights reserved.

FACILITIES FOR INTERSTATE ACCESS

5. SPECIAL ACCESS (Cont'd)

5.7 Rates and Charges (Cont'd)

5.7.14 High Capacity Digital DS3 (44.736 Mbps) Facilities - Special Transport

(A) DS3 Special Transport Facilities

Jurisdiction	3 System, Unlimited System, Individual Transport Per DS3, Per Airline Mile Monthly Rate	12 Group System Transport Per Group of 12, Per Airline Mile Monthly Rate#	24 Group System Transport Per Group of 24, Per Airline Mile Monthly Rate#	
California				
All Price Bands	$394.05	$3,589.83	$5,008.95	(C)
Florida & Texas				
All Price Bands	$1,669.65	$3,589.83	$5,008.95	(C)

Limited to those services so equipped and in service as of March 4, 1999.

© 2024 Frontier Communications Parent, Inc. All rights reserved.

FACILITIES FOR INTERSTATE ACCESS

5. SPECIAL ACCESS (Cont'd)

5.7 Rates and Charges (Cont'd)

5.7.14 High Capacity Digital DS3 (44.736 Mbps) Facilities - Special Transport (Cont'd)

(B) DS3 Special Transport Terminations

Jurisdiction	3 System, Unlimited System, Individual Transport Per DS3, Per Termination Monthly Rate	12 Group System Transport Per Group of 12, Per Termination Monthly Rate#	24 Group System Transport Per Group of 24, Per Termination Monthly Rate#	
California				
All Price Bands	$3,910.30	$41,741.12	$75,134.02	(C)
Florida & Texas				
All Price Bands	$6,261.25	$41,741.12	$75,134.02	(C)

Limited to those services so equipped and in service as of March 4, 1999.

© 2024 Frontier Communications Parent, Inc. All rights reserved.

5. SPECIAL ACCESS (Cont'd)

5.7 Rates and Charges (Cont'd)

5.7.14 High Capacity Digital DS3 (44.736 Mbps) Facilities - Special Transport (Cont'd)

(C) DS3 Banded Special Transport

Jurisdiction		Monthly Rate	
California, Florida Texas			
All Price Bands	1-4 Miles	$ 8,348.22	(C)
All Price Bands	5-8 Miles	11,854.49	
All Price Bands	9-15 Miles	16,362.53	
All Price Bands	16-25 Miles	18,783.51	
All Price Bands	26-40 Miles	23,041.08	
All Price Bands	41 Miles or more	40,906.31	(C)

© 2024 Frontier Communications Parent, Inc. All rights reserved.

FACILITIES FOR INTERSTATE ACCESS

5. SPECIAL ACCESS (Cont'd)

5.7 Rates and Charges (Cont'd)

5.7.14 High Capacity Digital DS3 (44.736 Mbps) Facilities - Special Transport (Cont'd)

(C) DS3 Banded Special Transport (Cont'd)

RESERVED FOR FUTURE USE

© 2022 Frontier Communications Parent, Inc. All rights reserved.

5. SPECIAL ACCESS (Cont'd)

5.7 Rates and Charges (Cont'd)

5.7.14 High Capacity Digital DS3 (44.736 Mbps) Facilities - Special Transport (Cont'd)

(C) DS3 Banded Special Transport (Cont'd)

RESERVED FOR FUTURE USE

© 2022 Frontier Communications Parent, Inc. All rights reserved.

5. SPECIAL ACCESS (Cont'd)

5.7 Rates and Charges (Cont'd)

5.7.15 High Capacity Digital DS3 (44.736 Mbps) Facilities DS3 Multiplexer Cross Connect Arrangement, Per Arrangement

Jurisdiction	Nonrecurring Charge	
California, Florida, Texas		
All Price Bands	$941.95	(C)

© 2024 Frontier Communications Parent, Inc. All rights reserved.

5. SPECIAL ACCESS (Cont'd)

5.7 Rates and Charges (Cont'd)

5.7.16 Four Wire Voiceband and Digital Data Service (DDS) Rate Stability Plan# (RSP)

(A) Rates

RSP Monthly Recurring Charges
Special Access Lines (End User CDL)

Four-Wire Voiceband

Jurisdiction	3 Year	5 Year
California		
Price Band A	$32.50	$30.95
Price Band B	$32.50	$30.95
Price Band C	$32.50	$30.95
Florida		
Price Band A	$42.50	$41.03
Price Band B	$42.50	$41.03
Price Band C	$42.50	$41.03
Texas		
Price Band A	$34.17	$32.54
Price Band B	$34.17	$32.54
Price Band C	$34.17	$32.54

DDS

	(2.4, 4.8, 9.6, 19.2 Kbps)		(56, 64 Kbps)	
Jurisdiction	3 Year	5 Year	3 Year	5 Year
California				
Price Band A	$63.84	$60.80	$83.79	$79.80
Price Band B	$63.84	$60.80	$83.79	$79.80
Price Band C	$63.84	$60.80	$83.79	$79.80
Florida				
Price Band A	$61.80	$58.60	$78.50	$76.75
Price Band B	$61.80	$58.60	$78.50	$76.75
Price Band C	$61.80	$58.60	$78.50	$76.75
Texas				
Price Band A	$63.84	$60.80	$79.80	$75.60
Price Band B	$63.84	$60.80	$79.80	$75.60
Price Band C	$63.84	$60.80	$79.80	$75.60

© 2022 Frontier Communications Parent, Inc. All rights reserved.

5. SPECIAL ACCESS (Cont'd)

5.7 Rates and Charges (Cont'd)

5.7.16 Four Wire Voiceband and Digital Data Service (DDS) Rate Stability Plan# (RSP) (Cont'd)

(A) Rates (Cont'd)

RSP Monthly Recurring Charges (Cont'd)
Special Access Lines (IC CDL)

Four-Wire Voiceband

Jurisdiction	3 Year	5 Year
California	$32.50	$30.95
Florida		
Price Band A	43.08	41.03
Price Band B	43.08	41.03
Price Band C	43.08	41.03
Texas		
Price Band A	34.27	32.64
Price Band B	34.27	32.64
Price Band C	34.27	32.64

© 2022 Frontier Communications Parent, Inc. All rights reserved.

5. SPECIAL ACCESS (Cont'd)

5.7 Rates and Charges (Cont'd)

5.7.16 Four Wire Voiceband and Digital Data Service (DDS) Rate Stability Plan# (RSP) (Cont'd)

(A) Rates (Cont'd)

RSP Monthly Recurring Charges (Cont'd)
Special Access Lines (IC CDL) (Cont'd)

	DDS (2.4, 4.8, 9.6, 19.2 Kbps)		(56, 64 Kbps)	
Jurisdiction	3 Year	5 Year	3 Year	5 Year
California	$63.84	$60.80	$83.79	$79.80
Florida				
Price Band A	63.84	60.80	83.79	79.80
Price Band B	63.84	60.80	83.79	79.80
Price Band C	63.84	60.80	83.79	79.80
Texas				
Price Band A	63.84	60.80	79.80	75.60
Price Band B	63.84	60.80	79.80	75.60
Price Band C	63.84	60.80	79.80	75.60

© 2022 Frontier Communications Parent, Inc. All rights reserved.

5. SPECIAL ACCESS (Cont'd)

5.7 Rates and Charges (Cont'd)

5.7.16 Four Wire Voiceband and Digital Data Service (DDS) Rate Stability Plan# (RSP) (Cont'd)

(A) Rates (Cont'd)

RSP Monthly Recurring Charges (Cont'd)

Special Transport (Per Airline Mile)

	Voiceband		DDS (All Speeds)	
Jurisdiction	3 Year	5 Year	3 Year	5 Year
California	$2.93	$2.90	$3.47	$3.27
Florida				
Price Band A	3.98	3.91	2.91	2.81
Price Band B	3.98	3.91	2.91	2.81
Price Band C	3.98	3.91	2.91	2.81
Texas				
Price Band A	4.21	4.05	4.28	4.05
Price Band B	4.21	4.05	4.28	4.05
Price Band C	4.21	4.05	4.28	4.05

Service availability limited. Refer to # footnote on Page 5-109.

© 2022 Frontier Communications Parent, Inc. All rights reserved.

5. SPECIAL ACCESS (Cont'd)

5.7 Rates and Charges (Cont'd)

5.7.17 RESERVED FOR FUTURE USE

© 2022 Frontier Communications Parent, Inc. All rights reserved.

5. SPECIAL ACCESS (Cont'd)

5.7 Rates and Charges (Cont'd)

5.7.18 DS1 Term Volume Plan (TVP) #

(A) Special Access Line, Per DS1 SAL

(1) One Year Term

	DS1 SAL (End User CDL)		
Jurisdiction	Nonrecurring Charge, All All Thresholds	Monthly Rate All Thresholds	
All States	Not Available	Not Available	(C)

Service availability limited. Refer to # footnote on Page 5-118.

© 2022 Frontier Communications Parent, Inc. All rights reserved.

5. SPECIAL ACCESS (Cont'd)

5.7 Rates and Charges (Cont'd)

5.7.18 DS1 Term Volume Plan (TVP) # (Cont'd)

(A) Special Access Line, Per DS1 SAL (Cont'd)

(1) One Year Term (Cont'd)

DS1 SAL (IC CDL)

Jurisdiction	Nonrecurring Charge, All Thresholds	Monthly Rates All Thresholds	
All States	Not Available	Not available	(C)

Service availability limited. Refer to # footnote on Page 5-118.

© 2022 Frontier Communications Parent, Inc. All rights reserved.

5. SPECIAL ACCESS (Cont'd)

5.7 Rates and Charges (Cont'd)

5.7.18 RESERVED FOR FUTURE USE

© 2022 Frontier Communications Parent, Inc. All rights reserved.

5. SPECIAL ACCESS (Cont'd)

5.7 Rates and Charges (Cont'd)

5.7.18 RESERVED FOR FUTURE USE

© 2022 Frontier Communications Parent, Inc. All rights reserved.

5. SPECIAL ACCESS (Cont'd)

5.7 Rates and Charges (Cont'd)

5.7.18 RESERVED FOR FUTURE USE

© 2022 Frontier Communications Parent, Inc. All rights reserved.

5. SPECIAL ACCESS (Cont'd)

5.7 Rates and Charges (Cont'd)

5.7.18 RESERVED FOR FUTURE USE

© 2022 Frontier Communications Parent, Inc. All rights reserved.

5. SPECIAL ACCESS (Cont'd)

5.7 Rates and Charges (Cont'd)

5.7.18 DS1 Term Volume Plan (TVP) # (Cont'd)

(A) Special Access Line, Per DS1 SAL (Cont'd)

(2) Two Year Term

DS1 SAL (End User CDL)

Jurisdiction	Nonrecurring Charge, All Thresholds	Monthly Rates All Thresholds	
All States	Not Available	Not available	(C)

Service availability limited. Refer to # footnote on Page 5-118.

© 2022 Frontier Communications Parent, Inc. All rights reserved.

FACILITIES FOR INTERSTATE ACCESS

5. SPECIAL ACCESS (Cont'd)

5.7 Rates and Charges (Cont'd)

5.7.18 DS1 Term Volume Plan (TVP) (Cont'd)

(A) Special Access Line, Per DS1 SAL (Cont'd)

(2) Two Year Term (Cont'd)

DS1 SAL (IC CDL)

Jurisdiction	Nonrecurring Charge, All Thresholds	Monthly Rates All Thresholds	
All States	Not Available	Not Available	(C)

Service availability limited. Refer to # footnote on Page 5-118.

© 2022 Frontier Communications Parent, Inc. All rights reserved.

5. SPECIAL ACCESS (Cont'd)

5.7 Rates and Charges (Cont'd)

5.7.18 RESERVED FOR FUTURE USE

© 2022 Frontier Communications Parent, Inc. All rights reserved.

5. SPECIAL ACCESS (Cont'd)

5.7 Rates and Charges (Cont'd)

5.7.18 RESERVED FOR FUTURE USE

© 2022 Frontier Communications Parent, Inc. All rights reserved.

5. SPECIAL ACCESS (Cont'd)

5.7 Rates and Charges (Cont'd)

5.7.18 RESERVED FOR FUTURE USE

© 2022 Frontier Communications Parent, Inc. All rights reserved.

5. SPECIAL ACCESS (Cont'd)

5.7 Rates and Charges (Cont'd)

5.7.18 RESERVED FOR FUTURE USE

© 2022 Frontier Communications Parent, Inc. All rights reserved.

FACILITIES FOR INTERSTATE ACCESS

5. SPECIAL ACCESS (Cont'd)

5.7 Rates and Charges (Cont'd)

5.7.18 DS1 Term Volume Plan (TVP) # (Cont'd)

(A) Special Access Line, Per DS1 SAL (Cont'd)

(3) Three Year Term

DS1 SAL (End User CDL)

Jurisdiction	Nonrecurring Charge, All Thresholds	Monthly Rate All Thresholds
All States	Not Available	Not Available

Service availability limited. Refer to # footnote on Page 5-118.

© 2022 Frontier Communications Parent, Inc. All rights reserved.

5. SPECIAL ACCESS (Cont'd)

5.7 Rates and Charges (Cont'd)

5.7.18 DS1 Term Volume Plan (TVP) # (Cont'd)

(A) Special Access Line, Per DS1 SAL (Cont'd)

(3) Three Year Term (Cont'd)

DS1 SAL (IC CDL)

Jurisdiction	Nonrecurring Charge, All Thresholds	Monthly Rate All Thresholds
All States	Not Available	Not Available

Service availability limited. Refer to # footnote on Page 5-118.

© 2022 Frontier Communications Parent, Inc. All rights reserved.

5. SPECIAL ACCESS (Cont'd)

5.7 Rates and Charges (Cont'd)

5.7.18 RESERVED FOR FUTURE USE

© 2022 Frontier Communications Parent, Inc. All rights reserved.

5. SPECIAL ACCESS (Cont'd)

5.7 Rates and Charges (Cont'd)

5.7.18 RESERVED FOR FUTURE USE

© 2022 Frontier Communications Parent, Inc. All rights reserved.

5. SPECIAL ACCESS (Cont'd)

5.7 Rates and Charges (Cont'd)

5.7.18 RESERVED FOR FUTURE USE

© 2022 Frontier Communications Parent, Inc. All rights reserved.

5. SPECIAL ACCESS (Cont'd)

5.7 Rates and Charges (Cont'd)

5.7.18 RESERVED FOR FUTURE USE

© 2022 Frontier Communications Parent, Inc. All rights reserved.

FACILITIES FOR INTERSTATE ACCESS

5. SPECIAL ACCESS (Cont'd)

5.7 Rates and Charges (Cont'd)

5.7.18 DS1 Term Volume Plan (TVP) # (Cont'd)

(A) Special Access Line, Per DS1 SAL (Cont'd)

(4) Five Year Term

		Monthly Rate DS1 SAL (End User CDL) Threshold Levels	
Jurisdiction	Nonrecurring Charge, All Thresholds	All Thresholds Up to 1000	All Thresholds 1001 and Over
All States	Not Available	Not Available	Not Available

Service availability limited. Refer to # footnote on Page 5-118.

© 2022 Frontier Communications Parent, Inc. All rights reserved.

5. SPECIAL ACCESS (Cont'd)

5.7 Rates and Charges (Cont'd)

5.7.18 DS1 Term Volume Plan (TVP) (Cont'd)

(A) Special Access Line, Per DS1 SAL (Cont'd)

(4) Five Year Term (Cont'd)

Jurisdiction	Nonrecurring Charge, All Thresholds	Monthly Rate DS1 SAL (IC CDL) Threshold Levels: All Thresholds Up to 1000	Monthly Rate DS1 SAL (IC CDL) Threshold Levels: All Thresholds 1001 and Over	(C)
All States	Not Available	Not Available	Not Available	(C)

Service availability limited. Refer to # footnote on Page 5-118.

© 2022 Frontier Communications Parent, Inc. All rights reserved.

5. SPECIAL ACCESS (Cont'd)

5.7 Rates and Charges (Cont'd)

5.7.18 RESERVED FOR FUTURE USE (C)

© 2022 Frontier Communications Parent, Inc. All rights reserved.

5. SPECIAL ACCESS (Cont'd)

5.7 Rates and Charges (Cont'd)

5.7.18 RESERVED FOR FUTURE USE

© 2022 Frontier Communications Parent, Inc. All rights reserved.

5. SPECIAL ACCESS (Cont'd)

5.7 Rates and Charges (Cont'd)

5.7.18 Reserved for Future Use (C)

© 2022 Frontier Communications Parent, Inc. All rights reserved.

5. SPECIAL ACCESS (Cont'd)

5.7 Rates and Charges (Cont'd)

5.7.18 RESERVED FOR FUTURE USE

© 2022 Frontier Communications Parent, Inc. All rights reserved.

5. SPECIAL ACCESS (Cont'd)

5.7 Rates and Charges (Cont'd)

5.7.18 DS1 Term Volume Plan (TVP) # (Cont'd)

(A) Special Access Line, Per DS1 SAL (Cont'd)

(5) Eight Year Term

DS1 SAL (End User CDL)

Jurisdiction	Nonrecurring Charge, All Thresholds	Monthly Rate All Thresholds	
All States	Not Available	Not Available	(C)

Service availability limited. Refer to # footnote on Page 5-118.

© 2022 Frontier Communications Parent, Inc. All rights reserved.

5. SPECIAL ACCESS (Cont'd)

5.7 Rates and Charges (Cont'd)

5.7.18 RESERVED FOR FUTURE USE

© 2022 Frontier Communications Parent, Inc. All rights reserved.

FACILITIES FOR INTERSTATE ACCESS

5. SPECIAL ACCESS (Cont'd)

5.7 Rates and Charges (Cont'd)

5.7.18 DS1 Term Volume Plan (TVP) (Cont'd)

(A) Special Access Line, Per DS1 SAL (Cont'd)

(5) Eight Year Term (Cont'd)

DS1 SAL (IC CDL)

Jurisdiction	Nonrecurring Charge, All Thresholds	Monthly Rate All Thresholds	
All States	Not Available	Not Available	(C)

Service availability limited. Refer to # footnote on Page 5-118.

© 2022 Frontier Communications Parent, Inc. All rights reserved.

5. SPECIAL ACCESS (Cont'd)

5.7 Rates and Charges (Cont'd)

5.7.18 RESERVED FOR FUTURE USE

© 2022 Frontier Communications Parent, Inc. All rights reserved.

5. SPECIAL ACCESS (Cont'd)

5.7 Rates and Charges (Cont'd)

5.7.18 DS1 Term Volume Plan (TVP) (Cont'd)

(A) Special Access Line, Per DS1 SAL (Cont'd)

(6) Ten Year Term

Monthly Rate

DS1 SAL (End User CDL)

Threshold Levels

Jurisdiction	Nonrecurring Charge, All Thresholds	All Thresholds	
All States	Not Available	Not Available	(C)

Service availability limited. Refer to # footnote on Page 5-118.

© 2023 Frontier Communications Parent, Inc. All rights reserved.

5. SPECIAL ACCESS (Cont'd)

5.7 Rates and Charges (Cont'd)

5.7.18 DS1 Term Volume Plan (TVP) (Cont'd)

(A) Special Access Line, Per DS1 SAL (Cont'd)

(6) Ten Year Term (Cont'd)

Monthly Rate

DS1 SAL (IC CDL)

Threshold Levels

Jurisdiction	Nonrecurring Charge, All Thresholds	All Thresholds
All States	Not Available	Not Available

(C)

Service availability limited. Refer to # footnote on Page 5-118.

© 2023 Frontier Communications Parent, Inc. All rights reserved.

5. SPECIAL ACCESS (Cont'd)

5.7 RESERVED FOR FUTURE USE (C)

© 2022 Frontier Communications Parent, Inc. All rights reserved.

5. SPECIAL ACCESS (Cont'd)

5.7 RESERVED FOR FUTURE USE (C)

© 2022 Frontier Communications Parent, Inc. All rights reserved.

FACILITIES FOR INTERSTATE ACCESS

5. SPECIAL ACCESS (Cont'd)

5.7 Rates and Charges (Cont'd)

5.7.19 High Capacity Digital E1 (2.048 Mbps) Facilities# (T)

(A) Standard Arrangements

Special Transport

Jurisdiction	Per Termination	Facility, Per Airline Mile
California	$40.00	$25.00
Florida	NA	NA
Texas	NA	NA

Service availability limited. Refer to # footnote on Page 5-141.

(N)

© 2022 Frontier Communications Parent, Inc. All rights reserved.

5. SPECIAL ACCESS (Cont'd)

5.7 Rates and Charges (Cont'd)

5.7.20 High Voltage Protection

	Initial Common Equipment		Terminating Equipment, Per Circuit Terminated	
Jurisdiction	Nonrecurring Charge	Monthly Rate	Nonrecurring Charge	Monthly Rate
California				
Price Band A	$500.00	$108.22	$50.00	$28.81
Price Band B	500.00	108.22	50.00	28.81
Price Band C	500.00	108.22	50.00	28.81
Florida				
Price Band A	500.00	108.22	50.00	28.81
Price Band B	500.00	108.22	50.00	28.81
Price Band C	500.00	108.22	50.00	28.81
Texas				
Price Band A	500.00	108.22	50.00	28.81
Price Band B	500.00	108.22	50.00	28.81
Price Band C	500.00	108.22	50.00	28.81

5.7.21 Reserved for Future Use

© 2022 Frontier Communications Parent, Inc. All rights reserved.

FACILITIES FOR INTERSTATE ACCESS

5. SPECIAL ACCESS (Cont'd)

5.7 Rates and Charges (Cont'd)

5.7.22 DS3 Term Volume Plan #(Cont'd)

(A) Protected Individual DS3 SAL with Telephone Company Electronics

(1) 3-Year

Jurisdiction	Commitment Level				
California	20-49	50-149	150-274	275-499	500+
		Monthly Rates, IC CDL			
Price Band A	$1,086.50	$1,060.00	$1033.50	$ 980.50	$ 927.50
Price Band B	1,086.50	1,060.00	1033.50	980.50	927.50
Price Band C	1,086.50	1,060.00	1033.50	980.50	927.50
		Nonrecurring Charge, IC CDL			
Price Band A	$1,250.00	$1,250.00	$1,250.00	$1,250.00	$1,250.00
Price Band B	1,250.00	1,250.00	1,250.00	1,250.00	1,250.00
Price Band C	1,250.00	1,250.00	1,250.00	1,250.00	1,250.00
		Monthly Rates, End User CDL			
Price Band A	$1,086.50	$1,060.00	$1033.50	$ 980.50	$ 927.50
Price Band B	1,086.50	1,060.00	1033.50	980.50	927.50
Price Band C	1,086.50	1,060.00	1033.50	980.50	927.50
		Nonrecurring Charge, End User CDL			
Price Band A	$1,250.00	$1,250.00	$1,250.00	$1,250.00	$1,250.00
Price Band B	1,250.00	1,250.00	1,250.00	1,250.00	1,250.00
Price Band C	1,250.00	1,250.00	1,250.00	1,250.00	1,250.00

Service availability limited. Refer to # footnote on Page 5-162.

© 2022 Frontier Communications Parent, Inc. All rights reserved.

FACILITIES FOR INTERSTATE ACCESS

5. SPECIAL ACCESS (Cont'd)

5.7 Rates and Charges (Cont'd)

5.7.22 DS3 Term Volume Plan #(Cont'd)

(A) Protected Individual DS3 SAL with Telephone Company Electronics (Cont'd)

(1) 3-Year (Cont'd)

Jurisdiction	Commitment Level				
Florida	20-49	50-149	150-274	275-499	500+
		Monthly Rates, IC CDL			
Price Band A	$1,086.50	$1,060.00	$1033.50	$ 980.50	$ 927.50
Price Band B	1,086.50	1,060.00	1033.50	980.50	927.50
Price Band C	1,086.50	1,060.00	1033.50	980.50	927.50
		Nonrecurring Charge, IC CDL			
Price Band A	$1,250.00	$1,250.00	$1,250.00	$1,250.00	$1,250.00
Price Band B	1,250.00	1,250.00	1,250.00	1,250.00	1,250.00
Price Band C	1,250.00	1,250.00	1,250.00	1,250.00	1,250.00
		Monthly Rates, End User CDL			
	$1,025.00	$1,000.00	$ 975.00	$ 925.00	$ 875.00
		Nonrecurring Charge, End User CDL			
Competitive	1,250.00	1,250.00	1,250.00	1,250.00	1,250.00

Service availability limited. Refer to # footnote on Page 5-162.

© 2022 Frontier Communications Parent, Inc. All rights reserved.

FACILITIES FOR INTERSTATE ACCESS

5. SPECIAL ACCESS (Cont'd)

5.7 Rates and Charges (Cont'd)

5.7.22 DS3 Term Volume Plan #(Cont'd)

(A) Protected Individual DS3 SAL with Telephone Company Electronics (Cont'd)

(1) 3-Year (Cont'd)

Jurisdiction	Commitment Level				
Texas	20-49	50-149	150-274	275-499	500+
			Monthly Rates, IC CDL		
Price Band A	$1,086.50	$1,060.00	$1033.50	$ 980.50	$ 927.50
Price Band B	1,086.50	1,060.00	1033.50	980.50	927.50
Price Band C	1,086.50	1,060.00	1033.50	980.50	927.50
			Nonrecurring Charge, IC CDL		
Price Band A	$1,250.00	$1,250.00	$1,250.00	$1,250.00	$1,250.00
Price Band B	1,250.00	1,250.00	1,250.00	1,250.00	1,250.00
Price Band C	1,250.00	1,250.00	1,250.00	1,250.00	1,250.00
			Monthly Rates, End User CDL		
Price Band A	$1,086.50	$1,060.00	$1,033.50	$ 980.50	$ 927.50
Price Band B	1,086.50	1,060.00	1,033.50	980.50	927.50
Price Band C	1,086.50	1,060.00	1,033.50	980.50	927.50
Price Band D	1,443.50	1,417.00	1,390.50	1,337.50	1,284.50
			Nonrecurring Charge, End User CDL		
Price Band A	$1,250.00	$1,250.00	$1,250.00	$1,250.00	$1,250.00
Price Band B	1,250.00	1,250.00	1,250.00	1,250.00	1,250.00
Price Band C	1,250.00	1,250.00	1,250.00	1,250.00	1,250.00

Service availability limited. Refer to # footnote on Page 5-162.

© 2022 Frontier Communications Parent, Inc. All rights reserved.

5. SPECIAL ACCESS (Cont'd)

5.7 Rates and Charges (Cont'd)

5.7.22 DS3 Term Volume Plan #(Cont'd)

(A) Protected Individual DS3 SAL with Telephone Company Electronics (Cont'd)

(2) 5-Year

Jurisdiction	Commitment Level				
California	20-49	50-149	150-274	275-499	500+
		Monthly Rates, IC CDL			
Price Band A	$1,049.40	$1,033.50	$1,007.00	$954.00	$906.30
Price Band B	1,049.40	1,033.50	1,007.00	954.00	906.30
Price Band C	1,049.40	1,033.50	1,007.00	954.00	906.30
		Nonrecurring Charge, IC CDL			
Price Band A	$1,250.00	$1,250.00	$1,250.00	$1,250.00	$1,250.00
Price Band B	1,250.00	1,250.00	1,250.00	1,250.00	1,250.00
Price Band C	1,250.00	1,250.00	1,250.00	1,250.00	1,250.00
		Monthly Rates, End User CDL			
Price Band A	$1,049.40	$1,033.50	$1,007.00	$954.00	$906.30
Price Band B	1,049.40	1,033.50	1,007.00	954.00	906.30
Price Band C	1,049.40	1,033.50	1,007.00	954.00	906.30
		Nonrecurring Charge, End User CDL			
Price Band A	$1,250.00	$1,250.00	$1,250.00	$1,250.00	$1,250.00
Price Band B	1,250.00	1,250.00	1,250.00	1,250.00	1,250.00
Price Band C	1,250.00	1,250.00	1,250.00	1,250.00	1,250.00

Service availability limited. Refer to # footnote on Page 5-162.

© 2022 Frontier Communications Parent, Inc. All rights reserved.

FACILITIES FOR INTERSTATE ACCESS

5. SPECIAL ACCESS (Cont'd)

5.7 Rates and Charges (Cont'd)

5.7.22 DS3 Term Volume Plan #(Cont'd)

(A) Protected Individual DS3 SAL with Telephone Company Electronics (Cont'd)

(2) 5-Year (Cont'd)

Jurisdiction	Commitment Level				
Florida	20-49	50-149	150-274	275-499	500+
		Monthly Rates, IC CDL			
Price Band A	$1,049.40	$1,033.50	$1,007.00	$954.00	$906.30
Price Band B	1,049.40	1,033.50	1,007.00	954.00	906.30
Price Band C	1,049.40	1,033.50	1,007.00	954.00	906.30
		Nonrecurring Charge, IC CDL			
Price Band A	$1,250.00	$1,250.00	$1,250.00	$1,250.00	$1,250.00
Price Band B	1,250.00	1,250.00	1,250.00	1,250.00	1,250.00
Price Band C	1,250.00	1,250.00	1,250.00	1,250.00	1,250.00
		Nonrecurring Charge, End User CDL			
Competitive	1,250.00	1,250.00	1,250.00	1,250.00	1,250.00

Service availability limited. Refer to # footnote on Page 5-162.

© 2022 Frontier Communications Parent, Inc. All rights reserved.

FACILITIES FOR INTERSTATE ACCESS

5. SPECIAL ACCESS (Cont'd)

5.7 Rates and Charges (Cont'd)

5.7.22 DS3 Term Volume Plan #(Cont'd)

(A) Protected Individual DS3 SAL with Telephone Company Electronics (Cont'd)

(2) 5-Year (Cont'd)

Jurisdiction	Commitment Level				
Texas	20-49	50-149	150-274	275-499	500+
		Monthly Rates, IC CDL			
Price Band A	$1,049.40	$1,033.50	$1,007.00	$954.00	$906.30
Price Band B	1,049.40	1,033.50	1,007.00	954.00	906.30
Price Band C	1,049.40	1,033.50	1,007.00	954.00	906.30
		Nonrecurring Charge, IC CDL			
Price Band A	$1,250.00	$1,250.00	$1,250.00	$1,250.00	$1,250.00
Price Band B	1,250.00	1,250.00	1,250.00	1,250.00	1,250.00
Price Band C	1,250.00	1,250.00	1,250.00	1,250.00	1,250.00
		Monthly Rates, End User CDL			
Price Band A	$1,049.40	$1,033.50	$1,007.00	$954.00	$906.30
Price Band B	1,049.40	1,033.50	1,007.00	954.00	906.30
Price Band C	1,049.40	1,033.50	1,007.00	954.00	906.30
		Nonrecurring Charge, End User CDL			
Price Band A	$1,250.00	$1,250.00	$1,250.00	$1,250.00	$1,250.00
Price Band B	1,250.00	1,250.00	1,250.00	1,250.00	1,250.00
Price Band C	1,250.00	1,250.00	1,250.00	1,250.00	1,250.00

Service availability limited. Refer to # footnote on Page 5-162.

© 2022 Frontier Communications Parent, Inc. All rights reserved.

FACILITIES FOR INTERSTATE ACCESS

5. SPECIAL ACCESS (Cont'd)

5.7 Rates and Charges (Cont'd)

5.7.22 DS3 Term Volume Plan# (Cont'd)

(A) Protected Individual DS3 SAL with Telephone Company Electronics (Cont'd)

(3) 7-Year

Jurisdiction	Commitment Level				
California	20-49	50-149	150-274	275-499	500+
		Monthly Rates, IC CDL			
Price Band A	$1,049.40	$1,033.50	$1,007.00	$954.00	$906.30
Price Band B	1,049.40	1,033.50	1,007.00	954.00	906.30
Price Band C	1,049.40	1,033.50	1,007.00	954.00	906.30
		Nonrecurring Charge, IC CDL			
Price Band A	$1,250.00	$1,250.00	$1,250.00	$1,250.00	$1,250.00
Price Band B	1,250.00	1,250.00	1,250.00	1,250.00	1,250.00
Price Band C	1,250.00	1,250.00	1,250.00	1,250.00	1,250.00
		Monthly Rates, End User CDL			
Price Band A	$1,049.40	$1,033.50	$1,007.00	$954.00	$906.30
Price Band B	1,049.40	1,033.50	1,007.00	954.00	906.30
Price Band C	1,049.40	1,033.50	1,007.00	954.00	906.30
		Nonrecurring Charge, End User CDL			
Price Band A	$1,250.00	$1,250.00	$1,250.00	$1,250.00	$1,250.00
Price Band B	1,250.00	1,250.00	1,250.00	1,250.00	1,250.00
Price Band C	1,250.00	1,250.00	1,250.00	1,250.00	1,250.00

Service availability limited. Refer to # footnote on Page 5-162.

© 2022 Frontier Communications Parent, Inc. All rights reserved.

5. SPECIAL ACCESS (Cont'd)

5.7 Rates and Charges (Cont'd)

5.7.22 DS3 Term Volume Plan #(Cont'd)

(A) Protected Individual DS3 SAL with Telephone Company Electronics (Cont'd)

(3) 7-Year (Cont'd)

Jurisdiction	Commitment Level				
Florida	20-49	50-149	150-274	275-499	500+
		Monthly Rates, IC CDL			
Price Band A	$1,049.40	$1,033.50	$1,007.00	$954.00	$906.30
Price Band B	1,049.40	1,033.50	1,007.00	954.00	906.30
Price Band C	1,049.40	1,033.50	1,007.00	954.00	906.30
		Nonrecurring Charge, IC CDL			
Price Band A	$1,250.00	$1,250.00	$1,250.00	$1,250.00	$1,250.00
Price Band B	1,250.00	1,250.00	1,250.00	1,250.00	1,250.00
Price Band C	1,250.00	1,250.00	1,250.00	1,250.00	1,250.00
		Nonrecurring Charge, End User CDL			
Competitive	1,250.00	1,250.00	1,250.00	1,250.00	1,250.00

Service availability limited. Refer to # footnote on Page 5-162.

© 2022 Frontier Communications Parent, Inc. All rights reserved.

5. SPECIAL ACCESS (Cont'd)

5.7 Rates and Charges (Cont'd)

5.7.22 DS3 Term Volume Plan #(Cont'd)

(A) Protected Individual DS3 SAL with Telephone Company Electronics (Cont'd)

(3) 7-Year (Cont'd)

Jurisdiction	Commitment Level				
Texas	20-49	50-149	150-274	275-499	500+
		Monthly Rates, IC CDL			
Price Band A	$1,049.40	$1,033.50	$1,007.00	$954.00	$906.30
Price Band B	1,049.40	1,033.50	1,007.00	954.00	906.30
Price Band C	1,049.40	1,033.50	1,007.00	954.00	906.30
		Nonrecurring Charge, IC CDL			
Price Band A	$1,250.00	$1,250.00	$1,250.00	$1,250.00	$1,250.00
Price Band B	1,250.00	1,250.00	1,250.00	1,250.00	1,250.00
Price Band C	1,250.00	1,250.00	1,250.00	1,250.00	1,250.00
		Monthly Rates, End User CDL			
Price Band A	$1,049.40	$1,033.50	$1,007.00	$954.00	$906.30
Price Band B	1,049.40	1,033.50	1,007.00	954.00	906.30
Price Band C	1,049.40	1,033.50	1,007.00	954.00	906.30
		Nonrecurring Charge, End User CDL			
Price Band A	$1,250.00	$1,250.00	$1,250.00	$1,250.00	$1,250.00
Price Band B	1,250.00	1,250.00	1,250.00	1,250.00	1,250.00
Price Band C	1,250.00	1,250.00	1,250.00	1,250.00	1,250.00

Service availability limited. Refer to # footnote on Page 5-162.

© 2022 Frontier Communications Parent, Inc. All rights reserved.

5. SPECIAL ACCESS (Cont'd)

5.7 Rates and Charges (Cont'd)

5.7.22 DS3 Term Volume Plan# (Cont'd)

(B) Protected Individual DS3 SAL without Telephone Company Electronics

(1) 3-Year

Jurisdiction	Commitment Level				
California	20-49	50-149	150-274	275-499	500+
		Monthly Rates, IC CDL			
Price Band A	$869.20	$848.00	$826.80	$784.40	$742.00
Price Band B	869.20	848.00	826.80	784.40	742.00
Price Band C	869.20	848.00	826.80	784.40	742.00
		Nonrecurring Charge, IC CDL			
Price Band A	$937.50	$937.50	$937.50	$937.50	$937.50
Price Band B	937.50	937.50	937.50	937.50	937.50
Price Band C	937.50	937.50	937.50	937.50	937.50
		Monthly Rates, End User CDL			
Price Band A	$869.20	$848.00	$826.80	$784.40	$742.00
Price Band B	869.20	848.00	826.80	784.40	742.00
Price Band C	869.20	848.00	826.80	784.40	742.00
		Nonrecurring Charge, End User CDL			
Price Band A	$937.50	$937.50	$937.50	$937.50	$937.50
Price Band B	937.50	937.50	937.50	937.50	937.50
Price Band C	937.50	937.50	937.50	937.50	937.50

Service availability limited. Refer to # footnote on Page 5-162.

© 2022 Frontier Communications Parent, Inc. All rights reserved.

5. SPECIAL ACCESS (Cont'd)

5.7 Rates and Charges (Cont'd)

5.7.22 DS3 Term Volume Plan# (Cont'd)

(B) Protected Individual DS3 SAL without Telephone Company Electronics (Cont'd)

(1) 3-Year (Cont'd)

Jurisdiction	Commitment Level				
Florida	20-49	50-149	150-274	275-499	500+
		Monthly Rates, IC CDL			
Price Band A	$869.20	$848.00	$826.80	$784.40	$742.00
Price Band B	869.20	848.00	826.80	784.40	742.00
Price Band C	869.20	848.00	826.80	784.40	742.00
		Nonrecurring Charge, IC CDL			
Price Band A	$937.50	$937.50	$937.50	$937.50	$937.50
Price Band B	937.50	937.50	937.50	937.50	937.50
Price Band C	937.50	937.50	937.50	937.50	937.50
		Nonrecurring Charge, End User CDL			
Competitive	$937.50	$937.50	$937.50	$937.50	$937.50

Service availability limited. Refer to # footnote on Page 5-162.

© 2022 Frontier Communications Parent, Inc. All rights reserved.

5. SPECIAL ACCESS (Cont'd)

5.7 Rates and Charges (Cont'd)

5.7.22 DS3 Term Volume Plan# (Cont'd)

(B) Protected Individual DS3 SAL without Telephone Company Electronics (Cont'd)

(1) 3-Year (Cont'd)

Jurisdiction	Commitment Level				
Texas	20-49	50-149	150-274	275-499	500+
		Monthly Rates, IC CDL			
Price Band A	$869.20	$848.00	$826.80	$784.40	$742.00
Price Band B	869.20	848.00	826.80	784.40	742.00
Price Band C	869.20	848.00	826.80	784.40	742.00
		Nonrecurring Charge, IC CDL			
Price Band A	$937.50	$937.50	$937.50	$937.50	$937.50
Price Band B	937.50	937.50	937.50	937.50	937.50
Price Band C	937.50	937.50	937.50	937.50	937.50
		Monthly Rates, End User CDL			
Price Band A	$869.20	$848.00	$826.80	$784.40	$742.00
Price Band B	869.20	848.00	826.80	784.40	742.00
Price Band C	869.20	848.00	826.80	784.40	742.00
		Nonrecurring Charge, End User CDL			
Price Band A	$937.50	$937.50	$937.50	$937.50	$937.50
Price Band B	937.50	937.50	937.50	937.50	937.50
Price Band C	937.50	937.50	937.50	937.50	937.50

Service availability limited. Refer to # footnote on Page 5-162.

© 2022 Frontier Communications Parent, Inc. All rights reserved.

FACILITIES FOR INTERSTATE ACCESS

5. SPECIAL ACCESS (Cont'd)

5.7 Rates and Charges (Cont'd)

5.7.22 DS3 Term Volume Plan# (Cont'd)

(B) Protected Individual DS3 SAL without Telephone Company Electronics (Cont'd)

(2) 5-Year

Jurisdiction	Commitment Level				
California	20-49	50-149	150-274	275-499	500+
		Monthly Rates, IC CDL			
Price Band A	$839.52	$826.80	$805.60	$763.20	$725.04
Price Band B	839.52	826.80	805.60	763.20	725.04
Price Band C	839.52	826.80	805.60	763.20	725.04
		Nonrecurring Charge, IC CDL			
Price Band A	$937.50	$937.50	$937.50	$937.50	$937.50
Price Band B	937.50	937.50	937.50	937.50	937.50
Price Band C	937.50	937.50	937.50	937.50	937.50
		Monthly Rates, End User CDL			
Price Band A	$839.52	$826.80	$805.60	$763.20	$725.04
Price Band B	839.52	826.80	805.60	763.20	725.04
Price Band C	839.52	826.80	805.60	763.20	725.04
		Nonrecurring Charge, End User CDL			
Price Band A	$937.50	$937.50	$937.50	$937.50	$937.50
Price Band B	937.50	937.50	937.50	937.50	937.50
Price Band C	937.50	937.50	937.50	937.50	937.50

Service availability limited. Refer to # footnote on Page 5-162.

© 2022 Frontier Communications Parent, Inc. All rights reserved.

5. SPECIAL ACCESS (Cont'd)

5.7 Rates and Charges (Cont'd)

5.7.22 DS3 Term Volume Plan #(Cont'd)

(B) Protected Individual DS3 SAL without Telephone Company Electronics (Cont'd)

(2) 5-Year (Cont'd)

Jurisdiction	Commitment Level				
Florida	20-49	50-149	150-274	275-499	500+
		Monthly Rates, IC CDL			
Price Band A	$839.52	$826.80	$805.60	$763.20	$725.04
Price Band B	839.52	826.80	805.60	763.20	725.04
Price Band C	839.52	826.80	805.60	763.20	725.04
		Nonrecurring Charge, IC CDL			
Price Band A	$937.50	$937.50	$937.50	$937.50	$937.50
Price Band B	937.50	937.50	937.50	937.50	937.50
Price Band C	937.50	937.50	937.50	937.50	937.50
		Nonrecurring Charge, End User CDL			
Competitive	$937.50	$937.50	$937.50	$937.50	$937.50

Service availability limited. Refer to # footnote on Page 5-162.

© 2022 Frontier Communications Parent, Inc. All rights reserved.

5. SPECIAL ACCESS (Cont'd)

5.7 Rates and Charges (Cont'd)

5.7.22 DS3 Term Volume Plan #(Cont'd)

(B) Protected Individual DS3 SAL without Telephone Company Electronics (Cont'd)

(2) 5-Year (Cont'd)

Jurisdiction	Commitment Level				
Texas	20-49	50-149	150-274	275-499	500+
		Monthly Rates, IC CDL			
Price Band A	$839.52	$826.80	$805.60	$763.20	$725.04
Price Band B	839.52	826.80	805.60	763.20	725.04
Price Band C	839.52	826.80	805.60	763.20	725.04
		Nonrecurring Charge, IC CDL			
Price Band A	$937.50	$937.50	$937.50	$937.50	$937.50
Price Band B	937.50	937.50	937.50	937.50	937.50
Price Band C	937.50	937.50	937.50	937.50	937.50
		Monthly Rates, End User CDL			
Price Band A	$839.52	$826.80	$805.60	$763.20	$725.04
Price Band B	839.52	826.80	805.60	763.20	725.04
Price Band C	839.52	826.80	805.60	763.20	725.04
		Nonrecurring Charge, End User CDL			
Price Band A	$937.50	$937.50	$937.50	$937.50	$937.50
Price Band B	937.50	937.50	937.50	937.50	937.50
Price Band C	937.50	937.50	937.50	937.50	937.50

Service availability limited. Refer to # footnote on Page 5-162.

© 2022 Frontier Communications Parent, Inc. All rights reserved.

5. SPECIAL ACCESS (Cont'd)

5.7 Rates and Charges (Cont'd)

5.7.22 DS3 Term Volume Plan# (Cont'd)

(B) Protected Individual DS3 SAL without Telephone Company Electronics (Cont'd)

(3) 7-Year

Jurisdiction	Commitment Level				
California	20-49	50-149	150-274	275-499	500+
		Monthly Rates, IC CDL			
Price Band A	$839.52	$826.80	$805.60	$763.20	$725.04
Price Band B	839.52	826.80	805.60	763.20	725.04
Price Band C	839.52	826.80	805.60	763.20	725.04
		Nonrecurring Charge, IC CDL			
Price Band A	$937.50	$937.50	$937.50	$937.50	$937.50
Price Band B	937.50	937.50	937.50	937.50	937.50
Price Band C	937.50	937.50	937.50	937.50	937.50
		Monthly Rates, End User CDL			
Price Band A	$839.52	$826.80	$805.60	$763.20	$725.04
Price Band B	839.52	826.80	805.60	763.20	725.04
Price Band C	839.52	826.80	805.60	763.20	725.04
		Nonrecurring Charge, End User CDL			
Price Band A	$937.50	$937.50	$937.50	$937.50	$937.50
Price Band B	937.50	937.50	937.50	937.50	937.50
Price Band C	937.50	937.50	937.50	937.50	937.50

Service availability limited. Refer to # footnote on Page 5-162.

© 2022 Frontier Communications Parent, Inc. All rights reserved.

5. SPECIAL ACCESS (Cont'd)

5.7 Rates and Charges (Cont'd)

5.7.22 DS3 Term Volume Plan# (Cont'd)

(B) Protected Individual DS3 SAL without Telephone Company Electronics (Cont'd)

(3) 7-Year (Cont'd)

Jurisdiction	Commitment Level				
Florida	20-49	50-149	150-274	275-499	500+
		Monthly Rates, IC CDL			
Price Band A	$839.52	$826.80	$805.60	$763.20	$725.04
Price Band B	839.52	826.80	805.60	763.20	725.04
Price Band C	839.52	826.80	805.60	763.20	725.04
		Nonrecurring Charge, IC CDL			
Price Band A	$937.50	$937.50	$937.50	$937.50	$937.50
Price Band B	937.50	937.50	937.50	937.50	937.50
Price Band C	937.50	937.50	937.50	937.50	937.50
		Nonrecurring Charge, End User CDL			
Competitive	$937.50	$937.50	$937.50	$937.50	$937.50

Service availability limited. Refer to # footnote on Page 5-162.

© 2022 Frontier Communications Parent, Inc. All rights reserved.

FACILITIES FOR INTERSTATE ACCESS

5. SPECIAL ACCESS (Cont'd)

5.7 Rates and Charges (Cont'd)

5.7.22 DS3 Term Volume Plan# (Cont'd)

(B) Protected Individual DS3 SAL without Telephone Company Electronics (Cont'd)

(3) 7-Year (Cont'd)

Jurisdiction	Commitment Level				
Texas	20-49	50-149	150-274	275-499	500+
		Monthly Rates, IC CDL			
Price Band A	$839.52	$826.80	$805.60	$763.20	$725.04
Price Band B	839.52	826.80	805.60	763.20	725.04
Price Band C	839.52	826.80	805.60	763.20	725.04
		Nonrecurring Charge, IC CDL			
Price Band A	$937.50	$937.50	$937.50	$937.50	$937.50
Price Band B	937.50	937.50	937.50	937.50	937.50
Price Band C	937.50	937.50	937.50	937.50	937.50
		Monthly Rates, End User CDL			
Price Band A	$839.52	$826.80	$805.60	$763.20	$725.04
Price Band B	839.52	826.80	805.60	763.20	725.04
Price Band C	839.52	826.80	805.60	763.20	725.04
		Nonrecurring Charge, End User CDL			
Price Band A	$937.50	$937.50	$937.50	$937.50	$937.50
Price Band B	937.50	937.50	937.50	937.50	937.50
Price Band C	937.50	937.50	937.50	937.50	937.50

Service availability limited. Refer to # footnote on Page 5-162.

© 2022 Frontier Communications Parent, Inc. All rights reserved.

5. SPECIAL ACCESS (Cont'd)

5.8 Miscellaneous Special Access Services (Cont'd)

5.8.1 Reserved for Future Use

5.8.2 Reserved for Future Use

5.8.3 Reserved for Future Use

5.8.4 Telephoto Conditioning

(A) Description of Service

Telephoto conditioning is used for the control of attenuation distortion and envelope delay distortion on telephotographic services.

(B) Rates

Jurisdiction	Nonrecurring Charge	Monthly Rate
California	$0.00	$82.44

5.8.5 Clear Channel Capability

(A) Description of Service

An arrangement that allows the customer to transport 1.536 Mbps of information through a DS1 with no constraint on the quantity or sequence of one (mark) and zero (space) bits utilizing the Bipolar with Eight Zero Substitution (B8ZS) method of providing bit sequence independence. This arrangement is capable of transporting DS1 signals which utilize Superframe or Extended Superframe Format (ESF) as defined by the American National Standards Institute (ANSI) T1.107-2002 (R2006) standard. The installation interval for Clear Channel Capability may exceed standard intervals where equipment in the central office is not readily available. The charges apply on a per SAL basis. Clear Channel Capability for DS1 is provided under Section 11.8.3(H) to the Federal Government.

This arrangement requires the customer signal at the channel interface to conform to the B8ZS method of providing bit sequence independence, as described in ANSI T1.102-1993 (R2005) and Section 6103 of the GTE Technical Interface Reference Manual.

© 2022 Frontier Communications Parent, Inc. All rights reserved.

5. SPECIAL ACCESS (Cont'd)

5.8 Miscellaneous Special Access Services (Cont'd)

5.8.5 Clear Channel Capability (Cont'd)

(B) Rates

Jurisdiction	Nonrecurring Charge	Monthly Rate	
California, Florida Texas			
All Price Bands	$1,417.62	$378.03	(C)

© 2024 Frontier Communications Parent, Inc. All rights reserved.

6. MISCELLANEOUS SERVICES

6.1 Reserved for Future Use

6.2 Additional Labor

Additional Labor is that labor requested by the customer on a given FIA and agreed to by the Telephone Company as set forth in (A) through (F) following. The Telephone Company will notify the customer that Additional Labor charges as set forth in (G) following will apply before any Additional Labor is undertaken. Additional Labor charges will also apply if the requirement for the Additional Labor is the fault of the customer or parties on whose behalf it acts. Charges for additional labor will apply per order submitted.

(A) Overtime Installation

Overtime installation is that Telephone Company installation effort outside the business day. Overtime rates will apply anytime outside the business day and all day Saturday. Premium time rates will apply all day Sunday and on all Telephone Company approved holidays. For applicable holidays in each jurisdiction contact Issuing Carrier identified on Title Pages 2 and 3 preceding.

(B) Overtime Repair

Overtime repair is Telephone Company repair which could have been performed during the normal business day, but that is delayed at the specific request of the customer to a later time period which is outside the normal business day or to a weekend day or holiday. The request will result in the application of overtime rates anytime outside the business day and all day Saturday. Premium time rates will apply on Sunday and Telephone Company approved holidays. These rates, as set forth in Section 6.2 following, will only apply when there is a delay of repair at the request of the customer to the time periods stated above.

(C) Additional Installation Testing

Additional installation testing is that testing performed by the Telephone Company at the time of installation which is in addition to normal pre service and acceptance testing.

© 2022 Frontier Communications Parent, Inc. All rights reserved.

6. MISCELLANEOUS SERVICES (Cont'd)

6.2 Additional Labor (Cont'd)

(D) Standby

Standby includes all time in excess of one half (1/2) hour during which Telephone Company personnel are available to make coordinated tests on a given FIA. The standby charge applies only when Telephone Company personnel must wait more than 30 minutes beyond a prearranged, mutually agreed appointment time. Standby charges will cease when testing begins, or when Telephone Company personnel are released from the standby requirement, or when testing is rescheduled for a later date or time. Charges will not be applicable if Telephone Company personnel cause the delay.

(E) Testing and Maintenance with Other Telephone Companies

Additional testing, maintenance, or repair of facilities which connect to facilities of other telephone companies, which is in addition to normal effort required to test, maintain, or repair facilities provided solely by the Telephone Company.

(F) Other Labor

Other labor is that additional labor not included in (A) through (E) preceding, and labor incurred to accommodate a specific customer request that involves only labor which is not covered by any other section of this Guide.

© 2022 Frontier Communications Parent, Inc. All rights reserved.

6. MISCELLANEOUS SERVICES (Cont'd)

6.2 Additional Labor (Cont'd)

(G) Charges for Additional Labor

(1) The charges for additional labor are as follows:

- Additional Cooperative Acceptance Testing – Special
- Additional Cooperative Testing – Switched
- Maintenance of Service (see Section 6.3)
- Nonscheduled Testing – Special
- Nonscheduled Testing – Switched
- Other Labor (see Section 6.2(F))
- Testing and Maintenance with Other Telephone Companies (see Section 6.2(E))

	Labor Periods Basic Time, Business Day, Per Technician	
Jurisdiction	First Half Hour or Fraction Thereof	Each Additional Half Hour or Fraction Thereof
California		
Special Access		
Price Cap	$150.00	$150.00
Price Bands A, B and C	$150.00	$150.00
All Other Services	$150.00	$150.00
Florida		
Special Access		
Price Cap	$150.00	$150.00
Price Bands A, B and C	$150.00	$150.00
All Other Services	$150.00	$150.00
Texas		
Special Access		
Price Cap	$150.00	$150.00
Price Bands A, B and C	$150.00	$150.00
All Other Services	$150.00	$150.00

© 2022 Frontier Communications Parent, Inc. All rights reserved.

FACILITIES FOR INTERSTATE ACCESS

6. MISCELLANEOUS SERVICES (Cont'd)

6.2 Additional Labor (Cont'd)

(G) Charges for Additional Labor (Cont'd)

(1) The charges for additional labor are as follows: (Cont'd)

Jurisdiction	Labor Periods Overtime, Outside the Business Day, Per Technician* First Half Hour or Fraction Thereof	Each Additional Half Hour or Fraction Thereof	
			(M)
California			
Special Access			
Price Cap	$200.00	$200.00	
Price Bands A, B and C	$200.00	$200.00	
All Other Services	$200.00	$200.00	
Florida			
Special Access			
Price Cap	$200.00	$200.00	
Price Bands A, B and C	$200.00	$200.00	
All Other Services	$200.00	$200.00	
Texas			
Special Access			
Price Cap	$200.00	$200.00	
Price Bands A, B and C	$200.00	$200.00	
All Other Services	$200.00	$200.00	(M)

* A call out of a Telephone Company employee at a time not consecutive with the business day is subject to a minimum charge of four hours.

Certain material on this page formerly appeared on Page 6-3.

© 2022 Frontier Communications Parent, Inc. All rights reserved.

FACILITIES FOR INTERSTATE ACCESS

6. MISCELLANEOUS SERVICES (Cont'd)

6.2 Additional Labor (Cont'd)

(G) Charges for Additional Labor (Cont'd)

(1) The charges for additional labor are as follows: (Cont'd)

Jurisdiction	Labor Periods Premium Time, Outside the Business Day, Per Technician* First Half Hour or Fraction Thereof	Each Additional Half Hour or Fraction Thereof	
			(M)
California			
Special Access			
Price Cap	$250.00	$250.00	
Price Bands A, B and C	$250.00	$250.00	
All Other Services	$250.00	$250.00	
Florida			
Special Access			
Price Cap	$250.00	$250.00	
Price Bands A, B and C	$250.00	$250.00	
All Other Services	$250.00	$250.00	
Texas			
Special Access			
Price Cap	$250.00	$250.00	
Price Bands A, B and C	$250.00	$250.00	
All Other Services	$250.00	$250.00	(M)

* A call out of a Telephone Company employee at a time not consecutive with the business day is subject to a minimum charge of four hours.

Material on this page formerly appeared on Page 6-3.

© 2022 Frontier Communications Parent, Inc. All rights reserved.

6. MISCELLANEOUS SERVICES (Cont'd)

6.2 Additional Labor (Cont'd)

(G) Charges for Additional Labor (Cont'd)

(2) The charges for additional labor are as follows:

- Additional Installation Testing (see Section 6.2(C))
- Overtime Installation (see Section 6.2(A))
- Overtime Repair (see Section 6.2 (B))

	Labor Periods Basic Time, Business Day, Per Technician		
Jurisdiction	First Half Hour or Fraction Thereof	Each Additional Half Hour or Fraction Thereof	
California			
Special Access			(T)
Price Cap	$32.45	$21.64	(T)
Price Bands A, B and C	$32.45	$21.64	(N)
All Other Services	$32.45	$21.64	(T)
Florida			
Special Access			(T)
Price Cap	$23.99	$15.99	(T)
Price Bands A, B and C	$23.99	$15.99	(N)
All Other Services	$23.99	$15.99	(T)
Texas			
Special Access			(T)
Price Cap	$30.81	$20.54	(T)
Price Bands A, B and C	$30.81	$20.54	(N)
All Other Services	$30.81	$20.54	(T)

© 2022 Frontier Communications Parent, Inc. All rights reserved.

FACILITIES FOR INTERSTATE ACCESS

6. MISCELLANEOUS SERVICES (Cont'd)

6.2 Additional Labor (Cont'd)

(G) Charges for Additional Labor (Cont'd)

(2) The charges for additional labor are as follows: (Cont'd)

	Labor Periods Overtime, Outside the Business Day, Per Technician*	
Jurisdiction	First Half Hour or Fraction Thereof	Each Additional Half Hour or Fraction Thereof
California		
Special Access		
Price Cap	$100.00	$75.00
Price Bands A, B and C	$100.00	$75.00
All Other Services	$100.00	$75.00
Florida		
Special Access		
Price Cap	$100.00	$75.00
Price Bands A, B and C	$100.00	$75.00
All Other Services	$100.00	$75.00
Texas		
Special Access		
Price Cap	$100.00	$75.00
Price Bands A, B and C	$100.00	$75.00
All Other Services	$100.00	$75.00

* A call out of a Telephone Company employee at a time not consecutive with the business day is subject to a minimum charge of four hours.

© 2022 Frontier Communications Parent, Inc. All rights reserved.

FACILITIES FOR INTERSTATE ACCESS

6. MISCELLANEOUS SERVICES (Cont'd)

6.2 Additional Labor (Cont'd)

(G) Charges for Additional Labor (Cont'd)

(2) The charges for additional labor are as follows: (Cont'd)

Labor Periods

Jurisdiction	Premium Time, Outside the Business Day, Per Technician* First Half Hour or Fraction Thereof	Premium Time, Outside the Business Day, Per Technician* Each Additional Half Hour or Fraction Thereof
California		
Special Access		
Price Cap	$150.00	$125.00
Price Bands A, B and C	$150.00	$125.00
All Other Services	$150.00	$125.00
Florida		
Special Access		
Price Cap	$150.00	$125.00
Price Bands A, B and C	$150.00	$125.00
All Other Services	$150.00	$125.00
Texas		
Special Access		
Price Cap	$150.00	$125.00
Price Bands A, B and C	$150.00	$125.00
All Other Services	$150.00	$125.00

* A call out of a Telephone Company employee at a time not consecutive with the business day is subject to a minimum charge of four hours.

© 2022 Frontier Communications Parent, Inc. All rights reserved.

6. MISCELLANEOUS SERVICES (Cont'd)

6.2 Additional Labor (Cont'd)

(G) Charges for Additional Labor (Cont'd)

(3) The charges for additional labor are as follows:

- Standby (see Section 6.2(D))

	Labor Periods Basic Time, Business Day, Per Technician	
Jurisdiction	First Half Hour or Fraction Thereof	Each Additional Half Hour or Fraction Thereof
California		
Special Access		
Price Cap	none	$60.00
Price Bands A, B and C	none	$60.00
All Other Services	none	$60.00
Florida		
Special Access		
Price Cap	none	$60.00
Price Bands A, B and C	none	$60.00
All Other Services	none	$60.00
Texas		
Special Access		
Price Cap	none	$60.00
Price Bands A, B and C	none	$60.00
All Other Services	none	$60.00

© 2022 Frontier Communications Parent, Inc. All rights reserved.

FACILITIES FOR INTERSTATE ACCESS

6. MISCELLANEOUS SERVICES (Cont'd)

6.2 Additional Labor (Cont'd)

(G) Charges for Additional Labor (Cont'd)

(3) The charges for additional labor are as follows: (Cont'd)

- Standby (see Section 6.2(D))

	Labor Periods Overtime, Outside the Business Day, Per Technician*	
Jurisdiction	First Half Hour or Fraction Thereof	Each Additional Half Hour or Fraction Thereof
California		
Special Access		
Price Cap	none	$70.00
Price Bands A, B and C	none	$70.00
All Other Services	none	$70.00
Florida		
Special Access		
Price Cap	none	$70.00
Price Bands A, B and C	none	$70.00
All Other Services	none	$70.00
Texas		
Special Access		
Price Cap	none	$70.00
Price Bands A, B and C	none	$70.00
All Other Services	none	$70.00

* A call out of a Telephone Company employee at a time not consecutive with the business day is subject to a minimum charge of four hours.

Material on this page formerly appeared on Page 6-5.

© 2022 Frontier Communications Parent, Inc. All rights reserved.

FACILITIES FOR INTERSTATE ACCESS

6. MISCELLANEOUS SERVICES (Cont'd)

6.2 Additional Labor (Cont'd)

(G) Charges for Additional Labor (Cont'd)

(3) The charges for additional labor are as follows: (Cont'd)

- Standby (see Section 6.2(D))

	Labor Periods Premium Time, Outside the Business Day, Per Technician*		
Jurisdiction	First Half Hour or Fraction Thereof	Each Additional Half Hour or Fraction Thereof	
California			
Special Access			(M)
Price Cap	none	$80.00	
Price Bands A, B and C	none	$80.00	
All Other Services	none	$80.00	
Florida			
Special Access			
Price Cap	none	$80.00	
Price Bands A, B and C	none	$80.00	
All Other Services	none	$80.00	
Texas			
Special Access			
Price Cap	none	$80.00	
Price Bands A, B and C	none	$80.00	
All Other Services	none	$80.00	(M)

* A call out of a Telephone Company employee at a time not consecutive with the business day is subject to a minimum charge of four hours.

Material on this page formerly appeared on Page 6-5.

© 2022 Frontier Communications Parent, Inc. All rights reserved.

6. MISCELLANEOUS SERVICES (Cont'd)

6.3 Maintenance of Service Charge

(A) When a customer reports trouble to the Telephone Company for clearance, the customer shall be responsible for payment of a Maintenance of Service Charge when Telephone Company personnel are dispatched to the customer's location and no trouble is found in the Telephone Company's facilities. Failure of Telephone Company personnel to find trouble in Telephone Company facilities will result in no charge if the trouble is actually in those facilities, but not discovered at the time.

In this case, or in (B) following, no credit allowance will be applicable for the interruption involved, unless the trouble is found in the Telephone Company's facilities.

(B) The customer shall be responsible for payment of a Maintenance of Service Charge when the Telephone Company dispatches personnel to the customer's location and the trouble is in equipment or communications systems provided by other than the Telephone Company or in detariffed CPE provided by the Telephone Company.

(C) The Maintenance of Service Charge time period will begin when Telephone Company personnel are dispatched. This will only include the actual time required to reach the customer's location and perform an investigation. The time period will end when the investigation is finished. The labor charge as set forth in 6.2 (G) preceding will apply to Maintenance of Service at the appropriate Basic, Overtime or Premium rate. These charges apply whether the trouble is in the equipment of communications systems provided by other than the Telephone Company, or in detariffed CPE provided by the Telephone Company.

© 2022 Frontier Communications Parent, Inc. All rights reserved.

6. MISCELLANEOUS SERVICES (Cont'd)

6.4 Telecommunications Service Priority (TSP) System

(A) Description of the Service

The TSP System is a service that provides for the priority provisioning and/or restoration of National Security Emergency Preparedness (NSEP) telecommunications services. The TSP System applies only to NSEP services, includes both Switched and Special FIA and provides the Telephone Company with a guide to the sequence in which services are to be provisioned and/or restored.

The Telephone Company currently has Special Access circuits classified as RP (Restoration Priority). These facilities were offered under part 64.401, Subpart D, Appendix A of the FCC Rules and Regulations prior to the revisions released November 17, 1988 under GEN. Docket No. 87 505 (FCC 88 341). These facilities will maintain their RP designation and priority treatment until either converted by the customer to the TSP System, or until March 10, 1993, whichever occurs first.

All FIA that can be identified by a unique circuit identifier can be provisioned for NSEP service by the Telephone Company.

The rates and charges associated with a customer subscribing to the TSP System are as specified in Section 6.4(G).

(B) Obtaining TSP System Service

The Executive Office of the President through the TSP Program Office, is empowered with the authority to receive, evaluate and process requests for NSEP services. The TSP Program Office makes the priority level assignments and issues the TSP authorization code reflecting the priority assignment associated with a request. The customer provides the TSP authorization code, in addition to all the other details necessary to complete the order (ASR) to the Telephone Company to obtain TSP System service.

The TSP authorization code, assigned on a per ASR basis, consists of a 12 character field consisting of a nine character control ID followed by a dash and a two character field specifying the priority level assignment. Its structure is as follows:

TSPxxxxxn yy

The "x"s represent a sequence of numbers unique to each TSP authorization code and the "n" is a one character alphanumeric check digit. The first "y" contains the provisioning priority level assignment and the second "y" contains the restoration priority level assignment.

© 2022 Frontier Communications Parent, Inc. All rights reserved.

6. MISCELLANEOUS SERVICES (Cont'd)

6.4 Telecommunications Service Priority (TSP) System (Cont'd)

(C) Provisioning Priority

If the customer requires service within a shorter time interval than the Telephone Company can provide, and the requested service qualifies for NSEP, the customer may elect to invoke NSEP Treatment and obtain the appropriate provisioning priority assignment from the TSP Program Office. Acceptable assignment code values are: E, 1, 2, 3, 4, 5 or 0.

The assignment of the value "E" denotes Emergency Provisioning and implies the service has the most critical provisioning requirements and the Telephone Company will respond accordingly. The Telephone Company will take immediate action to provide the requested service at the earliest possible date. Rates and charges associated with "E" provisioning are as specified in Section 6.4(G)(2)(a).

The assignment values of 1, 2, 3, 4 and 5 are treated as essential service priorities and the Company will adjust its available resources to meet the customer's requested due date. Rates and charges associated with invoking this priority treatment are specified in Section 6.4(G)(2)(b). The value "0" implies no provisioning priority.

(D) Restoration Priority

A TSP authorization code for restoration priority classifies the service as being among the nation's most important NSEP telecommunications services. The Company will restore these services before services without restoration priority assignments in the order of priority assignments. Acceptable values are: 1, 2, 3, 4, 5 or 0 with the value "1" being the highest priority.

When the Company recognizes a TSP as being out of service, unusable or receives a trouble report, available resources will be dispatched to restore the service as quickly as practicable. A priority value of 1, 2 or 3 requires dispatch outside normal business hours if necessary to restore the service. A priority value of 4 or 5 only requires dispatch outside of normal business hours if the next business day is more than 24 hours away. If the value "0" has been assigned, then no restoration priority is applicable to this service.

The minimum period for service is one month.

© 2022 Frontier Communications Parent, Inc. All rights reserved.

6. MISCELLANEOUS SERVICES (Cont'd)

6.4 Telecommunications Service Priority (TSP) System (Cont'd)

(E) Obligations of the Customer

(1) In all instances, the customer is responsible for obtaining the appropriate TSP authorization code and providing that code to the Telephone Company.

(2) The TSP System service customer must also be the customer for the FIA with which TSP service is associated. Only the customer or its authorized agent as indicated in a letter of agency on file with the Telephone Company is allowed to order TSP System service.

(3) All points of a multipoint service configuration must have the same restoration priority assignment and must satisfy the requirements of that assignment.

(4) In obtaining TSP System service, the customer consents to the release of certain information by the Telephone Company to the federal government in order to maintain and administer the TSP System. Such information includes: the customer's name, telephone number and mailing address, the TSP authorization code and the circuit or service ID number associated with the NSEP service.

(5) The Telephone Company will attempt to notify the customer of expected charges. The customer when invoking NSEP Treatment, recognizes that quoting charges and obtaining permission beforehand may not be practicable and may cause unnecessary delays and, as a result, grants the Telephone Company the right to quote and bill charges after provisioning of the service.

(6) During certain emergencies, the customer may request TSP assignments verbally and the Telephone Company will accept such verbal notification. The customer must submit a written order (ASR) to the Telephone Company within two working days following the verbal request. If the written order (ASR) is not received within two working days, all applicable rates and charges accumulated to date to provision TSP System service, become immediately due and payable and the requested TSP priority is revoked.

(7) The customer must request and justify revalidation of all priority level assignments at least every three years.

(8) Additionally, the NCS Manual M 3 1 1, "Telecommunications Service Priority (TSP) System for National Security Emergency Preparedness (NSEP) Service User Manual", prescribes specific conditions which warrant NSEP Treatment and related procedures.

© 2022 Frontier Communications Parent, Inc. All rights reserved.

FACILITIES FOR INTERSTATE ACCESS

6. MISCELLANEOUS SERVICES (Cont'd)

6.4 Telecommunications Service Priority (TSP) System (Cont'd)

(F) Obligations of the Telephone Company

(1) The Telephone Company will allocate resources to ensure best efforts to provide NSEP services by the time required.

(2) The Telephone Company will work TSP System services in the order of their priority level assignments. The priority sequence is as follows:

Restore NSEP services assigned restoration priority 1
Provision Emergency (E) NSEP services
Restore NSEP services assigned restoration priority 2, 3, 4 or 5
Provision NSEP services assigned provisioning priority 1, 2, 3, 4 or 5.

(3) The Telephone Company will work cooperatively with other providers of NSEP service when only a portion is provided by the Telephone Company to ensure "end to end" service.

(4) Additionally, TSP System service will be provided in accordance with the guidelines set forth in NCS Handbook H 3 1 2, "Telecommunications Service Priority (TSP) System for National Security Emergency Preparedness (NSEP) Service Vendor Handbook".

© 2022 Frontier Communications Parent, Inc. All rights reserved.

6. MISCELLANEOUS SERVICES (Cont'd)

6.4 Telecommunications Service Priority (TSP) System (Cont'd)

(G) Rates and Charges

The following rates and charges are in addition to all other rates and charges that may apply for other services offered under this Guide which operate in conjunction with the TSP System.

(1) Establishment of TSP System Service

The establishment of TSP System service charge is a nonrecurring charge (NRC) specified in Section 6.4(G)(4) which applies when a FIA is ordered with provisioning and/or restoration priority. If both are ordered at the same time, only one NRC is applicable. The NRC is also applicable for orders changing priority levels.

(2) Provisioning Priority

There are two basic levels of priority provisioning, Emergency (provisioning priority "E") and Essential (provisioning priority 1, 2, 3, 4 or 5).

(a) Emergency Provisioning

The Telephone company will take immediate action to provide the requested service at the earliest possible date. The rates and charges for Special Construction as set forth in Section 3.1.3 preceding may apply.

(b) Essential Provisioning

The Telephone Company will adjust its available resources to meet the customers requested due date. The rates and charges will apply as set forth in Section 3.2.2(E).

(3) Restoration Priority

Restoration Priority is a monthly rate per circuit for the ongoing administration and maintenance of the TSP System. rates are specified in Section 6.4(G)(5).

© 2022 Frontier Communications Parent, Inc. All rights reserved.

FACILITIES FOR INTERSTATE ACCESS

6. MISCELLANEOUS SERVICES (Cont'd)

6.4 Telecommunications Service Priority (TSP) System (Cont'd)

(G) Rates and Charges (Cont'd)

(4) Establishment of TSP System Service Charge

Jurisdiction	Nonrecurring Charge Per Circuit
California	$14.50
Florida	14.50
Texas	14.50

(4) Restoration Priority Rates

Jurisdiction	Monthly Rates Per Circuit
California	$4.90
Florida	4.90
Texas	4.90

© 2022 Frontier Communications Parent, Inc. All rights reserved.

6. MISCELLANEOUS SERVICES (Cont'd)

6.5 Additional Testing

The Telephone Company will perform acceptance testing as specified in 5.1.5 preceding to insure that FIA ordered by the customer are functioning properly, prior to turning over such FIA to the customer

Testing offered under this section of the tariff is in addition to those tests described above and will be provided, when requested by the customer, at an additional charge.

Testing is provided by Telephone Company personnel at Telephone Company locations. However, provisions are made in 6.6(A)(5) and 6.6(B)(2) following, to allow a customer to request Telephone Company personnel to perform testing at the customer designated location or the end user premises.

Additional testing is provided on a scheduled or nonscheduled basis. Scheduled testing shall be performed on a predetermined time basis to allow for cost efficient utilization of Telephone Company and customer resources. Scheduled testing should be based on a one year period. Nonscheduled tests are performed by the Telephone Company on a request by request basis, not in conjunction with any fixed schedule.

The offering of testing under this section of the tariff is made subject to the availability of the necessary qualified personnel and test equipment at the various test locations mentioned in (A) and (B) following.

© 2022 Frontier Communications Parent, Inc. All rights reserved.

6. MISCELLANEOUS SERVICES (Cont'd)

6.6 Additional Testing (Cont'd)

(A) Special Access Testing

The Telephone Company will, at the request of a customer, provide assistance in performing specific tests requested by the customer, however, the Telephone Company will only perform maintenance testing for its facilities within the LATA.

(1) Additional Cooperative Acceptance Testing

When a customer provides a technician at its customer designated location or at the end user premises, with suitable test equipment to perform the required tests, the Telephone Company will provide a technician at its office for the purpose of conducting Additional Cooperative Acceptance Testing (ACAT). The labor charges as set forth in 6.2(G) preceding will apply to ACAT at the appropriate Basic, Overtime, or Premium rate.

Additional Cooperative Acceptance Testing charges will apply when the customer requests tests which are not required to meet the transmission performance parameters as set forth in the GTE Technical Interface Reference Manual.

(2) Nonscheduled Testing

When a customer provides a technician at its customer designated location or at the end user premises, with suitable test equipment to perform the required tests, the Telephone Company will provide a technician at its office (cooperative testing) for the purpose of conducting Nonscheduled Testing (NST). Nonscheduled testing may consist of any test (e.g., loss, noise, slope, envelope delay, etc.) which the customer may request. If such testing indicates trouble in Telephone Company facilities, then the customer will not be charged. NST charges will apply if the trouble is in the facilities of the customer. At the customer's request, the Telephone Company will provide a technician at the customer designated location or at the end user premises (manual testing). The labor charges as set forth in 6.2(G) preceding will apply to Nonscheduled Testing at the appropriate Basic, Overtime, or Premium rate.

(3) Obligation of the Customer

When the customer the customer shall make the facilities to be tested available to the Telephone Company at times mutually agreed upon.

© 2022 Frontier Communications Parent, Inc. All rights reserved.

6. MISCELLANEOUS SERVICES (Cont'd)

6.6 Additional Testing (Cont'd)

(B) Rates and Charges

(1) Automatic Scheduled Testing

Jurisdiction	Basic Offering to First Point of Switching Per Transmission Path, Per Month Rate
California	$.45
Florida	.45
Texas	.45

(2) Additional Cooperative Scheduled Testing

Jurisdiction	Basic Offering to First Point of Switching Per Transmission Path, Per Month Rate
(USOC UBSXT)	
California	$1.82
Florida	1.16
Texas	1.51
(USOC UBSXD)	
California	$.77
Florida	.49
Texas	.64

© 2022 Frontier Communications Parent, Inc. All rights reserved.

6. MISCELLANEOUS SERVICES (Cont'd)

6.6 Additional Testing (Cont'd)

(B) Rates and Charges (Cont'd)

(3) Additional Manual Scheduled Testing

Jurisdiction	Basic Offering to First Point of Switching Per Transmission Path, Per Month Rate
(USOC UBMXT)	
California	$3.64
Florida	2.32
Texas	3.02
(USOC UBMXD)	
California	$1.55
Florida	.99
Texas	1.29

© 2022 Frontier Communications Parent, Inc. All rights reserved.

6. MISCELLANEOUS SERVICES (Cont'd)

6.7 End User/Agent Lists

(A) Reserved for Future Use

(B) Reserved for Future Use

(C) Snapshot List

The Snapshot List is a summary of selected end user and agent information for specific IC which resides in the Telephone Company customer data base. The snapshot List will be provided by electronic transmission at rates provided in 6.7.1(B). Foreign listings, PBX stations, CU centrex stations and numbers not in service will not be provided.

The Snapshot List will be provided to the IC no later than 30 days after receipt of the order. The nonrecurring charge for the Snapshot List applies per state per order.

The purpose, liability and objectives associated with the provision of the Snapshot List is as follows:

(1) The IC agrees to use the Snapshot List for the purpose of either contacting potential customers/agents, or existing customers/agents or for the purpose of updating IC customer/agent account information. The IC agrees not to sell, or reproduce in any manner, in whole or in part, the lists or permit such to be done.

(2) The IC shall indemnify, protect and save harmless the Telephone Company from and against any and all loss, liability, damages and expense arising out of any demand, claim, suit or judgment for damages which may arise out of the Telephone Company's supplying of listing information, services or records.

(3) The Telephone Company and the IC agree that the mutual objective of the parties is to conduct their respective businesses to avoid confusion by the end users and agents as to the separate and independent identity of the respective companies and their services. Neither the Telephone Company nor the IC shall make any representation to end users, the public, prospective advertisers, expressed or implied, written or oral, which would imply that the IC is the same as, a part of, or associated with the Telephone Company.

(4) This service may be terminated by either the Telephone Company or the IC upon thirty (30) days' written notice or as specified in 2.1.8. The Telephone Company reserves the right to terminate this service immediately upon written notice if the IC misuses the list information. Performance by the Telephone Company shall be excused in the event of strike, riot, act of God or any other cause beyond the reasonable control of the Telephone Company.

© 2022 Frontier Communications Parent, Inc. All rights reserved.

FACILITIES FOR INTERSTATE ACCESS

6. MISCELLANEOUS SERVICES (Cont'd)

6.7 End User/Agent Lists (Cont'd)

6.7.1 Rates and Charges

(A) Reserved for Future Use

(B) Snapshot List

Jurisdiction	Nonrecurring Charge Per State Per Order	Snapshot List Per Listing*
California	$75.00	$.05
Florida	75.00	.05
Texas	75.00	.05

* For the purpose of the Snapshot list, a listing is defined as an end user or agent record eligible for a Predesignated Interexchange Carrier Selection.

© 2022 Frontier Communications Parent, Inc. All rights reserved.

FACILITIES FOR INTERSTATE ACCESS

6. MISCELLANEOUS SERVICES (Cont'd)

6.8 Denial/Restoral Service

The Telephone Company will, upon request, provide Denial/Restoral service to ICs for those end users that have designated the IC as their primary interexchange carrier. Conditions regarding refusal or discontinuance of Denial/Restoral service are set forth in 2.1.8.

(A) Denial/Restoral service provides for Telephone Company notification to an IC that an end user's local exchange service has been temporarily suspended due to non-payment of the end user's local exchange service. Subsequently, the Telephone Company will provide notification to the IC if the end user's service has been restored from temporary suspension.

(B) Notification shall be provided via the Customer Acco9unt Record Exchange electronic interface.

(C) The IC agrees to abide by all applicable rules, decisions, orders, statues and laws concerning the disclosure of published and nonpublished telephone numbers, and further agrees to use the information provided by Denial/Restoral service only for the purposes of billing services provided to their end users.

(D) A charge in (E) will apply to the IC for each notification per end user local telephone exchange service number provided to the IC.

(E) Denial/Restoral Service
- per telephone number provided $.10

© 2022 Frontier Communications Parent, Inc. All rights reserved.

FACILITIES FOR INTERSTATE ACCESS

6. MISCELLANEOUS SERVICES (Cont'd)

6.9 DS1 Span Power

When DS1 Service, provided over metallic facilities, is connected to customer-provided optical high voltage protection equipment, the Telephone Company will provide upon request, DS1 span power from the CO to the CPE electrical-to-optical converter, at the point of termination.

	NRC	MRC
Telephone Company provided DS1 Span Power	$340.00	$71.00

© 2022 Frontier Communications Parent, Inc. All rights reserved.

FACILITIES FOR INTERSTATE ACCESS

7. RESERVED FOR FUTURE USE

© 2022 Frontier Communications Parent, Inc. All rights reserved.

FACILITIES FOR INTERSTATE ACCESS

8. RESERVED FOR FUTURE USE

© 2022 Frontier Communications Parent, Inc. All rights reserved.

9. RESERVED FOR FUTURE USE

© 2022 Frontier Communications Parent, Inc. All rights reserved.

10. RESERVED FOR FUTURE USE

© 2022 Frontier Communications Parent, Inc. All rights reserved.

FACILITIES FOR INTERSTATE ACCESS

11. RESERVED FOR FUTURE USE

© 2022 Frontier Communications Parent, Inc. All rights reserved.

FACILITIES FOR INTERSTATE ACCESS

12. RESERVED FOR FUTURE USE

© 2022 Frontier Communications Parent, Inc. All rights reserved.

13. RESERVED FOR FUTURE USE

© 2022 Frontier Communications Parent, Inc. All rights reserved.

FACILITIES FOR INTERSTATE ACCESS

14. RESERVED FOR FUTURE USE

© 2022 Frontier Communications Parent, Inc. All rights reserved.

15. RESERVED FOR FUTURE USE

© 2022 Frontier Communications Parent, Inc. All rights reserved.

16. RESERVED FOR FUTURE USE

© 2022 Frontier Communications Parent, Inc. All rights reserved.

17. RESERVED FOR FUTURE USE

© 2022 Frontier Communications Parent, Inc. All rights reserved.

FACILITIES FOR INTERSTATE ACCESS

18. RESERVED FOR FUTURE USE

© 2022 Frontier Communications Parent, Inc. All rights reserved.

19. Wire Center Information

19.1 RESERVED FOR FUTURE USE

© 2022 Frontier Communications Parent, Inc. All rights reserved.

19. Wire Center Information (Cont'd)

19.1 RESERVED FOR FUTURE USE

© 2022 Frontier Communications Parent, Inc. All rights reserved.

19. Wire Center Information (Cont'd)

19.1 RESERVED FOR FUTURE USE

© 2022 Frontier Communications Parent, Inc. All rights reserved.

19. Wire Center Information (Cont'd)

19.1 RESERVED FOR FUTURE USE

© 2022 Frontier Communications Parent, Inc. All rights reserved.

19. Wire Center Information (Cont'd)

19.1 RESERVED FOR FUTURE USE

© 2022 Frontier Communications Parent, Inc. All rights reserved.

19. Wire Center Information (Cont'd)

19.1 RESERVED FOR FUTURE USE

© 2022 Frontier Communications Parent, Inc. All rights reserved.

19. Wire Center Information (Cont'd)

19.1 RESERVED FOR FUTURE USE

© 2022 Frontier Communications Parent, Inc. All rights reserved.

19. Wire Center Information (Cont'd)

19.1 RESERVED FOR FUTURE USE

© 2022 Frontier Communications Parent, Inc. All rights reserved.

19. Wire Center Information (Cont'd)

19.1 RESERVED FOR FUTURE USE

© 2022 Frontier Communications Parent, Inc. All rights reserved.

FACILITIES FOR INTERSTATE ACCESS

19. Wire Center Information (Cont'd)

19.1 RESERVED FOR FUTURE USE

© 2022 Frontier Communications Parent, Inc. All rights reserved.

FACILITIES FOR INTERSTATE ACCESS

19. Wire Center Information (Cont'd)

19.1 RESERVED FOR FUTURE USE

© 2022 Frontier Communications Parent, Inc. All rights reserved.

FACILITIES FOR INTERSTATE ACCESS

19. Wire Center Information (Cont'd)

19.1 RESERVED FOR FUTURE USE

© 2022 Frontier Communications Parent, Inc. All rights reserved.

FACILITIES FOR INTERSTATE ACCESS

19. Wire Center Information (Cont'd)

19.1 RESERVED FOR FUTURE USE

© 2022 Frontier Communications Parent, Inc. All rights reserved.

FACILITIES FOR INTERSTATE ACCESS

19. Wire Center Information (Cont'd)

19.1 RESERVED FOR FUTURE USE

© 2022 Frontier Communications Parent, Inc. All rights reserved.

FACILITIES FOR INTERSTATE ACCESS

19. Wire Center Information (Cont'd)

19.1 RESERVED FOR FUTURE USE

© 2022 Frontier Communications Parent, Inc. All rights reserved.

FACILITIES FOR INTERSTATE ACCESS

19. Wire Center Information (Cont'd)

19.1 RESERVED FOR FUTURE USE

© 2022 Frontier Communications Parent, Inc. All rights reserved.

FACILITIES FOR INTERSTATE ACCESS

19. Wire Center Information (Cont'd)

19.1 RESERVED FOR FUTURE USE

© 2022 Frontier Communications Parent, Inc. All rights reserved.

FACILITIES FOR INTERSTATE ACCESS

19. Wire Center Information (Cont'd)

19.1 RESERVED FOR FUTURE USE

© 2022 Frontier Communications Parent, Inc. All rights reserved.

FACILITIES FOR INTERSTATE ACCESS

19. Wire Center Information (Cont'd)

19.1 RESERVED FOR FUTURE USE

© 2022 Frontier Communications Parent, Inc. All rights reserved.

FACILITIES FOR INTERSTATE ACCESS

19. Wire Center Information (Cont'd)

19.1 RESERVED FOR FUTURE USE

© 2022 Frontier Communications Parent, Inc. All rights reserved.

FACILITIES FOR INTERSTATE ACCESS

19. Wire Center Information (Cont'd)

19.1 RESERVED FOR FUTURE USE

© 2022 Frontier Communications Parent, Inc. All rights reserved.

FACILITIES FOR INTERSTATE ACCESS

19. Wire Center Information (Cont'd)

19.1 RESERVED FOR FUTURE USE

© 2022 Frontier Communications Parent, Inc. All rights reserved.

FACILITIES FOR INTERSTATE ACCESS

19. Wire Center Information (Cont'd)

19.1 RESERVED FOR FUTURE USE

© 2022 Frontier Communications Parent, Inc. All rights reserved.

FACILITIES FOR INTERSTATE ACCESS

19. Wire Center Information (Cont'd)

19.1 RESERVED FOR FUTURE USE

© 2022 Frontier Communications Parent, Inc. All rights reserved.

19. Wire Center Information (Cont'd)

19.2 Competitive and Non-Competitive Counties* (Cont'd)

(B) Rate Regulations

To determine the price band for the special transport rate element when the wire centers involved are located within different price bands, apply the rates and charges for the higher price band number.

For the avoidance of doubt, in accordance with Section 2.7 of this Tariff, only Telephone Company wire centers in the operating territory of this Tariff will be considered in order to determine the price band of the applicable special transport rate elements. If one wire center is in the operating territory of this Tariff and the other wire center is not, the rates and charges applicable to the special transport rate element will determined by the band that applies based on the wire center that is in the Telephone Company's operating territory.

When service is provided under a National Discount Plan as set forth in section 23.1 following, the discount percentage shall be applied to the rate applicable to the price band involved.

When service is provided as part of a Shared Use Arrangement, price band billing under Section 19.1 preceding may apply to the Switched Access portion of the facility, while price band billing under this Section 19.2 applies to the Special Access portion of the facility, or Rate Zone billing under this Section 19.1 preceding may apply to the Switched Access portion of the facility, while price band billing under this Section 19.2 applies to the Special Access portion of the facility.

The application of rates and charges for Special Access service subject to Competitive and Non-Competitive Counties pricing relief are described in Section 5.6.1 preceding.

Section 69.801(d) of the FCC's rules defines a "Grandfathered market" as "[a] county that does not satisfy the competitive market test set forth in § 69.803 for which a price cap local exchange carrier obtained Phase II relief pursuant to § 69.711(c)." Pursuant to Section 69.807(c) of the FCC's rules, CLLIs in Grandfathered Markets as indicated in Section 19.2(C) of this tariff, should apply the Price Cap rate for purposes of determining the applicable Nonrecurring Charge (NRC) associated with the rate element. The Price Band rate will continue to apply to the monthly recurring charge.

© 2022 Frontier Communications Parent, Inc. All rights reserved.

19. Wire Center Information (Cont'd)

19.2 Competitive and Non-Competitive Counties (Cont'd)

(C) Counties
(1) California

County	Status	SWC CLLI	Rate Zone/Price Band
Los Angeles	Competitive	ARTSCAXF	/A
Los Angeles	Competitive	AZUSCAXF	/A
Los Angeles	Competitive	BELRCAXF	/A
Los Angeles	Competitive	BLFLCAXF	/A
Los Angeles	Competitive	BLPKCAXF	/A
San Bernardino	Competitive	CCMNCAXF	/A
San Bernardino	Competitive	CHNOCAXF	/A
Los Angeles	Competitive	CLCYCAXG	/A
Los Angeles	Competitive	CLMTCAXF	/A
Ventura	Competitive	CMRLCAXF	/A
Los Angeles	Competitive	COVNCAXF	/A
Los Angeles	Competitive	DWNYCAXF	/A
Los Angeles	Competitive	DWNYCAXG	/A
Santa Barbara	Competitive	ELWDCAXF	/A
Santa Barbara	Competitive	GOLTCAXF	/A
Orange	Competitive	HNBHCAXF	/A
Los Angeles	Competitive	HRBHCAXA	/A
Los Angeles	Competitive	LAPNCAXF	/A
Los Angeles	Competitive	LAPNCAXG	/A
Los Angeles	Competitive	LNBHCAXF	/A
Los Angeles	Competitive	LNBHCAXP	/A
Los Angeles	Competitive	LNBHCAXP	/A
Los Angeles	Competitive	LNBHCAXG	/A
Los Angeles	Competitive	LNBHCAXM	/A
Los Angeles	Competitive	LNBHCAXS	/A

© 2022 Frontier Communications Parent, Inc. All rights reserved.

19. Wire Center Information (Cont'd)

19.2 Competitive and Non-Competitive Counties (Cont'd)

(C) Counties
(1) California

County	Status	SWC CLLI	Rate Zone/Price Band
Los Angeles	Competitive	LNBHCAXT	/A
Los Angeles	Competitive	MNRVCAXG	/A
Los Angeles	Competitive	NRWLCAXF	/A
Los Angeles	Competitive	NRWLCAXG	/A
Ventura	Competitive	NWPKCAXF	/A
San Bernardino	Competitive	ONTRCAXF	/A
San Bernardino	Competitive	ONTRCAXP	/A
Los Angeles	Competitive	PCRVCAXF	/A
Los Angeles	Competitive	PDRYCAXF	/A
Riverside	Competitive	PLDSCAXF	/A
Riverside	Competitive	PLSPCAXG	/A
Los Angeles	Competitive	RDBHCAXF	/A
San Bernardino	Competitive	RDLDCAXF	/A
Riverside	Competitive	RNCACAXF	/A
Riverside	Competitive	RNMGCAXF	/A
Orange	Competitive	SLBHCAXF	/A
Santa Barbara	Competitive	SNBBCAXF	/A
Santa Barbara	Competitive	SNBBCAXG	/A
San Bernardino	Competitive	SNBRCAXL	/A
San Bernardino	Competitive	SNBRCAXK	/A
San Bernardino	Competitive	SNBRCAXN	/A
Los Angeles	Competitive	SNMNCAXG	/A
Los Angeles	Competitive	SNMNCAXP	/A
Los Angeles	Competitive	SNMNCAXS	/A
Los Angeles	Competitive	SNMNCAXJ	/A

(D)

(D)

© 2022 Frontier Communications Parent, Inc. All rights reserved.

19. Wire Center Information (Cont'd)

19.2 Competitive and Non-Competitive Counties (Cont'd)

(C) Counties
(1) California

County	Status	SWC CLLI	Rate Zone/Price Band
Ventura	Competitive	THOKCAXF	/A
San Bernardino	Competitive	UPLDCAXF	/A
Los Angeles	Competitive	WHTRCAXF	/A
Los Angeles	Competitive	WHTRCAXH	/A
Los Angeles	Competitive	WLANCAXF	/A
Los Angeles	Competitive	WLANCAXG	/A
Los Angeles	Competitive	WLANCAXH	/A
Los Angeles	Competitive	WLANCAXJ	/A
Orange	Competitive	WMNSCAXF	/A
Riverside	Competitive	BRDNCAXF	/B
Santa Barbara	Competitive	CRPRCAXF	/B
Ventura	Competitive	ELRICAXF	/B
Los Angeles	Competitive	GLNDCAXF	/B
Los Angeles	Competitive	GRHLCAXF	/B
Riverside	Competitive	HEMTCAXF	/B
Orange	Competitive	HNBHCAXG	/B
Orange	Competitive	HNBHCAXH	/B
Riverside	Competitive	INDICAXG	/B
Orange	Competitive	LAHBCAXF	/B
Santa Barbara	Competitive	LMPCCAXF	/B
Los Angeles	Competitive	LNCSCAXG	/B
Santa Clara	Competitive	MRHLCAXF	/B
Marin	Competitive	NOVTCAXF	/B
Ventura	Competitive	OXNRCAXF	/B
Los Angeles	Competitive	PACMCAXF	/B

(D)

© 2022 Frontier Communications Parent, Inc. All rights reserved.

19. Wire Center Information (Cont'd)

19.2 Competitive and Non-Competitive Counties (Cont'd)

(C) Counties
(1) California

County	Status	SWC CLLI	Rate Zone/Price Band
Los Angeles	Competitive	POMNCAXF	/B
Los Angeles	Competitive	RLHLCAXF	/B
Los Angeles	Competitive	SNDMCAXF	/B
Santa Barbara	Competitive	SNTMCAXF	/B
Riverside	Competitive	SNYMCAXF	/B
Los Angeles	Competitive	SPLVCAXF	/B
Ventura	Competitive	THOKCAXH	/B
Los Angeles	Competitive	TRNCCAXF	/B
Los Angeles	Competitive	TRNCCAXG	/B
Los Angeles	Competitive	WHTRCAXJ	/B
Los Angeles	Competitive	WLNTCAXF	/B
Riverside	Competitive	ANZACAXF	/C
San Bernardino	Competitive	ARHDCAXF	/C
Tulare	Competitive	BDGRCAXF	/C
Los Angeles	Competitive	BLGRCAXF	/C
Riverside	Competitive	BNNGCAXF	/C
Riverside	Competitive	BUMTCAXF	/C
Riverside	Competitive	CCHLCAXF	/C
Riverside	Competitive	CLMSCAXF	/C
San Bernardino	Competitive	CRLNCAXF	/C
Riverside	Competitive	DHSPCAXF	/C
Los Angeles	Competitive	DMBRCAXF	/C
Fresno	Competitive	DNLPCAXF	/C
Riverside	Competitive	DSCTCAXG	/C
San Bernardino	Competitive	DSHGCAXF	/C

(D)

(D)

© 2022 Frontier Communications Parent, Inc. All rights reserved.

19. Wire Center Information (Cont'd)

19.2 Competitive and Non-Competitive Counties (Cont'd)

(C) Counties
(1) California

County	Status	SWC CLLI	Rate Zone/Price Band	
Riverside	Competitive	DSSHCAXF	/C	(D)
Riverside	Competitive	EDMTCAXF	/C	
Riverside	Competitive	ELSNCAXF	/C	
Riverside	Competitive	ELSNCAXG	/C	
San Bernardino	Competitive	ETWNCAXF	/C	
Fresno	Competitive	FWLRCAXF	/C	
Santa Barbara	Competitive	GDLPCAXG	/C	(D)
Inyo	Non-Competitive	GGVGCAXF	3/C	
Riverside	Competitive	HMLDCAXF	/C	(D)
San Bernardino	Competitive	HMVYCAXF	/C	
Orange	Competitive	HNBHCAXL	/C	
Riverside	Competitive	IDYLCAXF	/C	
San Bernardino	Competitive	JSTRCAXF	/C	
Sonoma	Competitive	KNWDCAXF	/C	
Los Angeles	Competitive	LAPNCAXL	/C	
Riverside	Competitive	LAQNCAXG	/C	
Orange	Competitive	LGBHCAXF	/C	
Los Angeles	Competitive	LKHGCAXF	/C	
San Bernardino	Competitive	LMLNCAXF	/C	
Santa Barbara	Competitive	LMPCCAXG	/C	
Los Angeles	Competitive	LNBHCAXH	/C	
Los Angeles	Competitive	LNBHCAXL	/C	
Los Angeles	Competitive	LNCSCAXF	/C	
Tulare	Competitive	LNDSCAXF	/C	
Santa Barbara	Competitive	LSALCAXF	/C	
				(D)

© 2022 Frontier Communications Parent, Inc. All rights reserved.

19. Wire Center Information (Cont'd)

19.2 Competitive and Non-Competitive Counties (Cont'd)

(C) Counties
(1) California

County	Status	SWC CLLI	Rate Zone/Price Band	
Santa Clara	Competitive	LSGTCAXA	/C	(D)
Santa Clara	Competitive	LSGTCAXF	/C	
Santa Clara	Competitive	LSGTCAXG	/C	
San Bernardino	Competitive	LSSRCAXF	/C	
Los Angeles	Competitive	LVRNCAXF	/C	
Los Angeles	Competitive	MALBCAXF	/C	
Los Angeles	Competitive	MALBCAXG	/C	
Riverside	Competitive	MECCCAXF	/C	
San Bernardino	Competitive	MENTCAXF	/C	
Los Angeles	Competitive	MNBHCAXF	/C	
Santa Barbara	Competitive	MNTTCAXF	/C	
Fresno	Competitive	MRMNCAXF	/C	
San Bernardino	Competitive	MRVYCAXF	/C	
San Bernardino	Competitive	MSCYCAXF	/C	
Ventura	Competitive	MUGUCAXF	/C	
Riverside	Competitive	MURTCAXF	/C	
Riverside	Competitive	NSHRCAXF	/C	
Riverside	Competitive	OASSCAXF	/C	
San Bernardino	Competitive	ONTRCAXG	/C	
San Bernardino	Competitive	ONTRCAXM	/C	
Santa Barbara	Competitive	ORCTCAXG	/C	
Ventura	Competitive	OXNRCAXG	/C	
Los Angeles	Competitive	PCPLCAXF	/C	
Riverside	Competitive	PERSCAXF	/C	
Riverside	Competitive	PNYNCAXF	/C	
				(N)

© 2022 Frontier Communications Parent, Inc. All rights reserved.

19. Wire Center Information (Cont'd)

19.2 Competitive and Non-Competitive Counties (Cont'd)

(C) Counties
(1) California

County	Status	SWC CLLI	Rate Zone/Price Band	
Los Angeles	Competitive	PSDNCAXF	/C	(D)
Riverside	Competitive	QUVYCAXF	/C	
Los Angeles	Competitive	QZHLCAXF	/C	
Fresno	Competitive	RDLYCAXF	/C	
Imperial	Competitive	SLCYCAXF	/C	
Orange	Competitive	SLGBCAXF	/C	
Santa Barbara	Competitive	SLVNCAXG	/C	
San Bernardino	Competitive	SNBRCAXH	/C	
Riverside	Competitive	SNCYCAXF	/C	
Los Angeles	Competitive	SNFNCAXG	/C	
Riverside	Competitive	SNJCCAXG	/C	
Los Angeles	Competitive	SNLDCAXF	/C	
Ventura	Competitive	SNPLCAXB	/C	
Ventura	Competitive	SNPLCAXF	/C	
Los Angeles	Competitive	SRMDCAXF	/C	
Tulare	Competitive	STMRCAXF	/C	
Santa Barbara	Competitive	SURFCAXF	/C	
Fresno	Competitive	SVYFCAXF	/C	
Los Angeles	Competitive	SYLMCAXF	/C	
Riverside	Competitive	TMCLCAXG	/C	
Riverside	Competitive	TMCLCAXH	/C	
Riverside	Competitive	THPLCAXF	/C	
Riverside	Competitive	THRMCAXF	/C	
Los Angeles	Competitive	TPNGCAXF	/C	
San Bernardino	Competitive	TWPLCAXF	/C	(D)

© 2022 Frontier Communications Parent, Inc. All rights reserved.

19. Wire Center Information (Cont'd)

19.2 Competitive and Non-Competitive Counties (Cont'd)

(C) Counties

(1) California

County	Status	SWC CLLI	Rate Zone/Price Band	
Los Angeles	Competitive	PSDNCAXF	/C	(D)
Riverside	Competitive	QUVYCAXF	/C	
Los Angeles	Competitive	QZHLCAXF	/C	
Fresno	Competitive	RDLYCAXF	/C	
Imperial	Competitive	SLCYCAXF	/C	(D)

(2) Florida

County	Status	SWC CLLI	Price Band
Hillsborough	Competitive	BHPKFLXA	A
Hillsborough	Competitive	BRNDFLXA	A
Pinellas	Competitive	CLWRFLXA	A
Pinellas	Competitive	CNSDFLXA	A
Hillsborough	Competitive	CRWDFLXA	A
Pinellas	Competitive	DNDNFLXA	A
Pinellas	Competitive	FHSDFLXA	A
Pinellas	Competitive	GNDYFLXA	A
Pinellas	Competitive	LLMNFLXA	A
Pinellas	Competitive	LRGOFLXA	A
Pinellas	Competitive	NGBHFLXA	A
Pasco	Competitive	NPRCFLXA	A
Pinellas	Competitive	PNLSFLXA	A
Hillsborough	Competitive	BHPKFLXA	A

© 2022 Frontier Communications Parent, Inc. All rights reserved.

19. Wire Center Information (Cont'd) (C)

19.2 Competitive and Non-Competitive Counties (Cont'd) (C)

(C) Counties (N)
(2) Florida (N)

County	Status	SWC CLLI	Price Band
Hillsborough	Competitive	SLSPFLXA	A
Pinellas	Competitive	SPBGFLXA	A
Sarasota	Competitive	SRSTFLXA	A
Sarasota	Competitive	SSDSFLXA	A
Pinellas	Competitive	STGRFLXA	A
Hillsborough	Competitive	SWTHFLXA	A
Hillsborough	Competitive	TAMPFLXE	A
Hillsborough	Competitive	TAMPFLXX	A
Hillsborough	Competitive	TMTRFLXA	A
Hillsborough	Competitive	UNVRFLXA	A
Hillsborough	Competitive	WLCRFLXA	A
Hillsborough	Competitive	WSSDFLXA	A
Hillsborough	Competitive	TAMPFLXA	A
Hillsborough	Competitive	YBCTFLXA	A
Pinellas	Competitive	BAYUFLXA	B
Sarasota	Competitive	ENWDFLXA	B
Pasco	Competitive	HDSNFLXA	B
Hillsborough	Competitive	HYPKFLXA	B
Pinellas	Competitive	INRKFLXX	B
Pinellas	Competitive	PSDNFLXA	B
Hillsborough	Competitive	PTCYFLXA	B
Pinellas	Competitive	SKWYFLXA	B
Pinellas	Competitive	SPBGFLXS	B
Sarasota	Competitive	SPRGFLXA	B
Pinellas	Competitive	TRSPFLXA	B

(N)

© 2022 Frontier Communications Parent, Inc. All rights reserved.

19. Wire Center Information (Cont'd) (C)

19.2 Competitive and Non-Competitive Counties (Cont'd) (C)

(C) Counties (N)
(2) Florida (N)

County	Status	SWC CLLI	Price Band
Sarasota	Competitive	VENCFLXA	B
Hillsborough	Competitive	ALFAFLXA	C
Hillsborough	Competitive	BYSHFLXA	C
Hillsborough	Competitive	KYSTFLXA	C
Pasco	Competitive	LNLKFLXA	C
Hillsborough	Competitive	LUTZFLXA	C
Hillsborough	Competitive	MNLKFLXA	C
Manatee	Competitive	MYCYFLXA	C
Sarasota	Competitive	NRPTFLXA	C
Hillsborough	Competitive	OLDSFLXA	C
Sarasota	Competitive	OSPRFLXA	C
Hillsborough	Competitive	PNCRFLXA	C
Hillsborough	Competitive	RSKNFLXA	C
Sarasota	Competitive	SARKFLXA	C
Sarasota	Competitive	SEKYFLXA	C
Pinellas	Competitive	SGBEFLXA	C
Hillsborough	Competitive	SMNLFLXA	C
Pasco	Competitive	SNSPFLXA	C
Hillsborough	Competitive	THNTFLXA	C
Sarasota	Competitive	VENCFLXS	C
Hillsborough	Competitive	WIMMFLXA	C
Pasco	Competitive	WLCHFLXA	C
Pasco	Competitive	ZPHYFLXA	C
Polk	Competitive	LKLDFLXA	A
Manatee	Competitive	BRBAFLXA	B

(N)

© 2022 Frontier Communications Parent, Inc. All rights reserved.

19. Wire Center Information (Cont'd) (C)

19.2 Competitive and Non-Competitive Counties (Cont'd) (C)

(C) Counties (N)
(2) Florida (N)

County	Status	SWC CLLI	Price Band
Manatee	Competitive	BRTNFLXX	B
Polk	Competitive	HGLDFLXA	B
Polk	Competitive	LKLDFLXE	B
Sarasota	Competitive	NRSDFLXA	B
Manatee	Competitive	PLSLFLXA	B
Polk	Competitive	WNHNFLXC	B
Polk	Competitive	ABDLFLXA	C
Polk	Competitive	ALTRFLXA	C
Manatee	Competitive	ANMRFLXA	C
Polk	Competitive	BARTFLXA	C
Polk	Competitive	BBPKFLXA	C
Polk	Competitive	BRJTFLXA	C
Polk	Competitive	CYGRFLXA	C
Polk	Competitive	DUNDFLXA	C
Polk	Competitive	FRSTFLXA	C
Polk	Competitive	HNCYFLXA	C
Polk	Competitive	HNCYFLXN	C
Polk	Competitive	INLKFLXA	C
Manatee	Competitive	LGBKFLXA	C
Polk	Competitive	LKALFLXA	C
Polk	Competitive	LKLDFLXN	C
Polk	Competitive	LKWLFLXA	C
Polk	Competitive	LKWLFLXE	C
Polk	Competitive	MLBYFLXA	C
Polk	Competitive	PKCYFLXA	C

(N)

© 2022 Frontier Communications Parent, Inc. All rights reserved.

19. Wire Center Information (Cont'd)

19.2 Competitive and Non-Competitive Counties (Cont'd)

(C) Counties
(2) Florida

County	Status	SWC CLLI	Price Band
Manatee	Competitive	PLMTFLXA	C
Polk	Competitive	POINFLXA	C
Manatee	Competitive	PRSHFLXA	C

(3)
Texas

County	Status	SWC CLLI	Rate Zone/Price Band	
Dallas	Competitive	CRTNTXXA	/A	
Denton	Competitive	CRTNTXXB	/A	
Denton	Competitive	CRTNTXXC	/A	
Dallas	Competitive	CRTNTXXD	/A	
Dallas	Competitive	DFIATXXA	/D	(C)
Denton	Competitive	DNTNTXXA	/A	
Dallas	Competitive	GRLDTXXA	/A	
Dallas	Competitive	GRLDTXXB	/A	
Dallas	Competitive	GRLDTXXC	/A	
Tarrant	Competitive	GRPVTXXA	/A	
Dallas	Competitive	IRNGTXXA	/A	
Dallas	Competitive	IRNGTXXB	/A	
Dallas	Competitive	IRNGTXXC	/A	
Dallas	Competitive	IRNGTXXD	/A	
Dallas	Competitive	IRNGTXXE	/A	
Dallas	Competitive	IRNGTXXF	/A	

© 2022 Frontier Communications Parent, Inc. All rights reserved.

19. Wire Center Information (Cont'd)

19.2 Competitive and Non-Competitive Counties (Cont'd)

(C) Counties
(3) Texas

County	Status	SWC CLLI	Rate Zone/Price Band	
Dallas	Competitive	IRNGTXXG	/A	(D)
Denton	Competitive	LWVLTXXA	/A	
Denton	Competitive	LWVLTXXB	/A	
Collin	Competitive	PLANTXXA	/A	
Collin	Competitive	PLANTXXB	/A	
Collin	Competitive	PLANTXXD	/A	
Collin	Competitive	PLANTXXF	/A	
Collin	Competitive	PLANTXXK	/A	
Tarrant	Competitive	KLLRTXXA	/B	
Denton	Competitive	LWVLTXXC	/B	
Denton	Competitive	LWVLTXXF	/B	
Dallas	Competitive	RWLTTXXA	/B	
Denton	Competitive	ARGYTXXB	/C	
Tarrant	Competitive	AZLETXXA	/C	
Denton	Competitive	BNVLTXXA	/C	
Dallas	Competitive	GRLDTXXE	/C	
Denton	Competitive	JSTNTXXB	/C	
Denton	Competitive	LWVLTXXE	/C	
Denton	Competitive	PLPTTXXB	/C	
Dallas	Competitive	WYLITXXA	/C	
Brazos	Competitive	BRYNTXXA	/A	
Brazos	Competitive	CLSTTXXA	/A	
Brazos	Competitive	CLSTTXXB	/A	
Galveston	Competitive	LGCYTXXA	/A	
Tom Green	Competitive	SANGTXXA	/A	(D)

© 2022 Frontier Communications Parent, Inc. All rights reserved.

19. Wire Center Information (Cont'd)

19.2 Competitive and Non-Competitive Counties (Cont'd)

(C) Counties
(3) Texas

County	Status	SWC CLLI	Rate Zone/Price Band	
Tom Green	Competitive	SANGTXXB	/A	
Tom Green	Competitive	SANGTXXG	/A	
Grayson	Non-Competitive	SHMNTXXA	1/A	
Brazos	Competitive	BRYNTXXC	/B	
Brown	Competitive	BWWDTXXA	/B	
Harris	Competitive	BYTWTXXA	/B	
Galveston	Competitive	DCSNTXXA	/B	
Val Verde	Competitive	DLRITXXA	/B	
Williamson	Competitive	GRTWTXXA	/B	
San Patricio	Competitive	INSDTXXA	/B	
Cherokee	Non-Competitive	JCVLTXXA	2/B	
Galveston	Competitive	KEMHTXXA	/B	
Gregg	Competitive	KLGRTXXA*	/B	(Z)
Calhoun	Non-Competitive	PTLVTXXA	2/B	
Hopkins	Competitive	SLSPTXXA	/B	
Fort Bend	Competitive	STFRTXXA	/B	
Hidalgo	Competitive	WSLCTXXA	/B	
Nueces	Competitive	AGDLTXXA	/C	
Brazoria	Competitive	ARCLTXXA	/C	
San Patricio	Competitive	ARPSTXXA	/C	
Galveston	Competitive	BCLFTXXA	/C	
Reagan	Competitive	BGLKTXXA	/C	
Harris	Competitive	BHCYTXXA	/C	
Blanco	Competitive	BLANTXXA	/C	
Brown	Competitive	BLNKTXXA	/C	

*This CLLI code is in a Grandfathered Market with pricing as defined in Section 19.2(B) of this tariff. (Z)

© 2022 Frontier Communications Parent, Inc. All rights reserved.

19. Wire Center Information (Cont'd)

19.2 Competitive and Non-Competitive Counties (Cont'd)

(C) Counties
(3) Texas

County	Status	SWC CLLI	Rate Zone/Price Band	
Victoria	Non-Competitive	BLTNTXXA	3/C	
Runnels	Competitive	BNGRTXXA	/C	(D)
Brown	Competitive	BNGSTXXA	/C	(D)
Fannin	Non-Competitive	BNHMTXXA	3/C	
Van Zandt	Competitive	BNWHTXXA	/C	(D)
Kendall	Competitive	BORNTXXA	/C	
McCulloch	Competitive	BRDYTXXA	/C	
Irion	Competitive	BRNHTXXA	/C	
Coke	Competitive	BRNTTXXA	/C	
Brazos	Competitive	BRYNTXXB	/C	
Nueces	Competitive	BSHPTXXA	/C	(D)
Matagorda	Non-Competitive	BSNGTXXA	3/C	
Hays	Competitive	BUDATXXA	/C	(D)
Harris	Competitive	BYTWTXXB	/C	
Harris	Competitive	BYTWTXXC	/C	(D)
Atascosa	Non-Competitive	CHRLTXXA	3/C	
Tom Green	Competitive	CHRTTXXA	/C	(D)
Coleman	Competitive	CLMNTXXA	/C	
Brazos	Competitive	CLSTTXXD	/C	(D)
Burleson	Non-Competitive	CLWLTXXA	3/C	
Comanche	Competitive	CMNCTXXA	/C	(D)
Van Zandt	Competitive	CNTNTXXA	/C	(D)
Grayson	Non-Competitive	COVLTXXA	3/C	
Tom Green	Competitive	CRLBTXXA	/C	(D)
Harris	Competitive	CRSBTXXA	/C	(D)

© 2022 Frontier Communications Parent, Inc. All rights reserved.

19. Wire Center Information (Cont'd)

19.2 Competitive and Non-Competitive Counties (Cont'd)

(C) Counties
(3) Texas

County	Status	SWC CLLI	Rate Zone/Price Band	
Burleson	Non-Competitive	DEVLTXXA	3/C	
Frio	Competitive	DLLYTXXA	/C	
Val Verde	Competitive	DLRITXXB	/C	
Lee	Non-Competitive	DMBXTXXA	3/C	
Hays	Competitive	DRSPTXXA	/C	
Wharton	Non-Competitive	EBRNTXXA	3/C	
Fannin	Non-Competitive	ECTRTXXA	3/C	
Concho	Competitive	EDENTXXA	/C	
Schleicher	Competitive	ELDRTXXA	/C	
Brooks	Competitive	FLFRTXXA	/C	
Gillespie	Competitive	FRBGTXXA	/C	
Fayette	Non-Competitive	FYVLTXXA	3/C	
Upshur	Competitive	GILMTXXA	/C	
Mills	Non-Competitive	GLDTTXXA	3/C	
Gregg	Competitive	GLWTTXXA*	/C	(Z)
Lee	Non-Competitive	GNGSTXXA	3/C	
Grayson	Non-Competitive	GNTRTXXA	3/C	
Gonzales	Competitive	GNZLTXXA	/C	
Grayson	Non-Competitive	GOVLTXXB	3/C	
Live Oak	Non-Competitive	GRGWTXXA	3/C	
Williamson	Competitive	GRNGTXXA	/C	
Burnet	Competitive	GRSHTXXB	/C	
Van Zandt	Competitive	GRSLTXXA	/C	
Comanche	Competitive	GUSTTXXA	/C	
Harris	Competitive	HFMNTXXA	/C	

*This CLLI code is in a Grandfathered Market with pricing as defined in Section 19.2(B) of this tariff. (Z)

© 2022 Frontier Communications Parent, Inc. All rights reserved.

19. Wire Center Information (Cont'd)

19.2 Competitive and Non-Competitive Counties (Cont'd)

(C) Counties
(3) Texas

County	Status	SWC CLLI	Rate Zone/Price Band
Harris	Competitive	HGLNTXXA	/C
Harrison	Competitive	HLVLTXXA*	/C (Z)
Rusk	Competitive	HNSNTXXA	/C
Grayson	Non-Competitive	HOWETXXA	3/C
Galveston	Competitive	HTCHTXXA	/C
Marion	Competitive	JCSNTXXA	/C
Blanco	Competitive	JHCYTXXA	/C
Kimble	Non-Competitive	JNCTTXXA	3/C
Williamson	Competitive	JRRLTXXA	/C
Atascosa	Non-Competitive	JRTNTXXA	3/C
Galveston	Competitive	KEMHTXXB	/C
Llano	Non-Competitive	KGLDTXXA	3/C
Brazos	Competitive	KRTNTXXA	/C
Hays	Competitive	KYLETXXA	/C
Cameron	Competitive	LAFRTXXA	/C
Fayette	Non-Competitive	LGRNTXXA	3/C
Brown	Competitive	LKBRTXXA	/C
Llano	Non-Competitive	LLANTXXA	3/C
Fannin	Non-Competitive	LNRDTXXA	3/C
Kimble	Non-Competitive	LONDTXXA	3/C
Wilson	Competitive	LVRNTXXA	/C
Lee	Non-Competitive	LXTNTXXA	3/C
Willacy	Competitive	LYFRTXXA	/C
Mason	Competitive	MASNTXXA	/C
Runnels	Competitive	MILSTXXA	/C

*This CLLI code is in a Grandfathered Market with pricing as defined in Section 19.2(B) of this tariff. (Z)

© 2022 Frontier Communications Parent, Inc. All rights reserved.

19. Wire Center Information (Cont'd)

19.2 Competitive and Non-Competitive Counties (Cont'd)

(C) Counties
(3) Texas

County	Status	SWC CLLI	Rate Zone/Price Band	
Menard	Competitive	MNRDTXXA	/C	(D)
Burnet	Competitive	MRFLTXXA	/C	(D)
Chambers	Non-Competitive	MTBLTXXA	3/C	
Franklin	Competitive	MTVRTXXA	/C	(D)
Irion	Competitive	MTZNTXXA	/C	
Van Zandt	Competitive	MYSPTXXA	/C	
Gonzales	Competitive	NIXNTXXA	/C	(D)
Lee	Non-Competitive	NRUPTXXA	3/C	
Cherokee	Non-Competitive	NSFDTXXA	3/C	
Walker	Non-Competitive	NWWVTXXA	3/C	
San Patricio	Competitive	ODEMTXXA	/C	(D)
Colorado	Non-Competitive	OKLDTXXA	3/C	
Jim Wells	Competitive	ORGVTXXA	/C	(D)
Crockett	Competitive	OZONTXXA	/C	(D)
Matagorda	Non-Competitive	PLCSTXXA	3/C	
Calhoun	Non-Competitive	PNCMTXXA	3/C	
Concho	Competitive	PNRKTXXA	/C	(D)
Jim Wells	Competitive	PRMTTXXA	/C	
San Patricio	Competitive	PTLDTXXA	/C	(D)
Calhoun	Non-Competitive	PTOCTXXA	3/C	
Wood	Competitive	QTMNTXXA	/C	(D)
Coke	Competitive	RBLETXXA	/C	
San Patricio	Competitive	RBTNTXXA	/C	
Starr	Competitive	RGCYTXXA	/C	
Willacy	Competitive	RMVLTXXA	/C	(D)

© 2022 Frontier Communications Parent, Inc. All rights reserved.

19. Wire Center Information (Cont'd)

19.2 Competitive and Non-Competitive Counties (Cont'd)

(C) Counties
(3) Texas

County	Status	SWC CLLI	Rate Zone/Price Band	
Blanco	Competitive	RNMTTXXB	/C	(D)
Starr	Competitive	ROMATXXA	/C	
Runnels	Competitive	ROWNTXXA	/C	
Brazoria	Competitive	RSHRTXXA	/C	(D)
Cherokee	Non-Competitive	RUSKTXXA	3/C	
Galveston	Competitive	SNTFTXXA	/C	(D)
Fayette	Non-Competitive	SCBGTXXA	3/C	
Calhoun	Non-Competitive	SDRTTXXA	3/C	
San Jacinto	Non-Competitive	SHPHTXXA	3/C	
Gonzales	Competitive	SMLYTXXA	/C	(D)
Bexar	Competitive	SMRTTXXA	/C	(D)
Milam	Non-Competitive	SNGBTXXA	3/C	
Sutton	Competitive	SNRATXXA	/C	(D)
Cameron	Competitive	SNRSTXXA	/C	(D)
Burleson	Non-Competitive	SOVLTXXA	3/C	
Sterling	Non-Competitive	STCYTXXA	3/C	
Gillespie	Competitive	STNWTXXA	/C	(D)
San Patricio	Competitive	TAFTTXXA	/C	(D)
Milam	Non-Competitive	THDLTXXA	3/C	
Live Oak	Non-Competitive	THRRTXXA	3/C	
Grayson	Non-Competitive	TIOGTXXB	3/C	
Refugio	Competitive	TIVOTXXA	/C	(D)
Llano	Non-Competitive	TOW TXXA	3/C	
Fannin	Non-Competitive	TRENTXXA	3/C	
Rusk	Competitive	TRTWTXXA	/C	(D)

© 2022 Frontier Communications Parent, Inc. All rights reserved.

19. Wire Center Information (Cont'd)

19.2 Competitive and Non-Competitive Counties (Cont'd)

(C) Counties
(3) Texas

County	Status	SWC CLLI	Rate Zone/Price Band	
Burleson	Non-Competitive	TUNSTXXG	3/C	
Grayson	Non-Competitive	VALSTXXA	3/C	
Van Zandt	Competitive	VAN TXXA	/C	(D)
Jackson	Non-Competitive	VNDRTXXA	3/C	
Austin	Non-Competitive	WALSTXXA	3/C	
Colorado	Non-Competitive	WEMRTXXA	3/C	
Grayson	Non-Competitive	WHBOTXXC	3/C	
Montgomery	Competitive	WILSTXXA	/C	(D)
Gillespie	Competitive	WLCYTXXA	/C	
Hays	Competitive	WMBRTXXA	/C	
Wood	Competitive	WNBOTXXA	/C	
Titus	Competitive	WNFDTXXA	/C	
Runnels	Competitive	WNTRTXXA	/C	
Tom Green	Competitive	WTVYTXXA	/C	
Brown	Competitive	ZPHYTXXA	/C	(D)

© 2022 Frontier Communications Parent, Inc. All rights reserved.

20. Optical Networking

(A) General

This section contains the rules and regulations pertaining to the provisioning of SONET Access and Dense Wave Division Multiplexing (DWDM) Service. The regulations and rates specified herein are in addition to the applicable rates and regulations specified in other Sections of this Guide.

This service supports asynchronous bandwidth capacities at 1.5 Mbps and 45 Mbps in addition to synchronous Optical Carrier (OC) bandwidth capacities at OC-3, OC-3c, OC-12, OC-12c, OC-48, OC48c and OC192 bit rates and 1.25 Gbps or 2.5 Gbps wavelengths. The SONET add/drop multiplexer aggregates lesser bit speed services onto the dedicated SONET ring or the two-point SONET circuit configuration.

(B) Description

Optical Networking is comprised of high speed SONET based and/or DWDM technology providing connectivity at, and transport between, two or more customer designated locations (CDLs). Additionally, certain Optical Networking services provide interconnection between an EIS arrangement and a Telephone Company wire center associated with certain Optical Networking Service or advanced data service*.

* Advanced data services include Telephone Company provided frame relay services, switched multi-megabit services, Internet Protocol services, LAN Extension Services and ATM-cell relay services. Connections to advanced data services are provided by the Telephone Company where such connections are technically and operationally feasible, as determined by the Telephone Company.

© 2022 Frontier Communications Parent, Inc. All rights reserved.

20. Optical Networking (Cont'd)

(C) Conditions

Optical Networking services are provided where facilities are available with sufficient bandwidth capacity to meet the customer's request.

The customer is responsible for providing all facilities and cabling necessary to connect customer equipment to this interface or to interconnect with the Telephone Company or its services under an EIS arrangement.

The customer will be billed additional charges for any charges levied the Telephone Company for space and power required to place equipment on the company's side of the network interface.

Customer Facility Assignment (CFA) is controlled by the Telephone Company, on all access customer serving wire centers on the IOF and extends to the terminating CDL. Should the customer require control of the facility assignment and order multiplexing on the IOF, the services from the multiplexer to the end user serving wire center will be ordered from Section 5 of this Guide.

It is the customer's responsibility to ensure that the customer's equipment provides industry standard electrical signals compatible with Optical Networking transport transmission. Technical specifications are contained in the following publications:

GR-253-CORE, Issue 4
GR-1400-CORE, Issue 3
GR-1374-CORE, Issue 1
ANSI T1.105.01-2000 (R2005)
ANSI T1.102-1993 (R2005)

The Company will work cooperatively with the customer during a planning session to insure that the customer orders sufficient Ethernet Private Line bandwidth capacity to satisfy the customer's requirements as well as other applicable Ethernet Private Line services. This planning session must take place prior to an initial Ethernet Private Line ASR.

© 2022 Frontier Communications Parent, Inc. All rights reserved.

20. Optical Networking (Cont'd)

(D) Application of Rates and Charges

(1) CONNECT

The Connect rate element provides the platform for customer access to the Telephone Company's Optical Network where connection to certain Ethernet Private Line services or advanced data services occur. The Connect rate element provides the link between the CDL or EIS arrangement and the SWC of the CDL or EIS arrangement.

There are three types of Connects:

- Single Route Connect *
- Dual Route Connect *
- CO Connect *
- Express Connect#
- Flex Express Connect##
- Custom Connect### (N)

(a) Single Route Connect

The Single Route provides a connection to the Telephone Company's wire center(s) via a point-to-point route configuration. The Single Route Connect may be provided as electrical or optical interface in OC bandwidths of OC3, OC12, OC24 or OC48. The Single Route Connect may be ordered as switched or special access.

(b) Dual Route Connect

The Dual Route Connect provides a connection to the Telephone Company's wire center(s) in which the working transmission path traverses a distinct and separate path from the protection transmission path. The Dual Route Connect may be provided as electrical or optical interface in OC bandwidths of OC3, OC12, OC24 or OC48. The Dual Route Connect may be ordered as switched or special access.

(c) Reserved for Future Use

* Grandfathered to existing service effective December 26, 1998.
\# Service availability limited. See # footnote on Page 20-5.
\## Service availability limited. See # footnote on Page 20-6.
\### Grandfathered. See # footnote on Page 20-7.1 (N)

© 2022 Frontier Communications Parent, Inc. All rights reserved.

20. Optical Networking (Cont'd)

(D) Application of Rates and Charges (Cont'd)

(1) CONNECT (Cont'd)

(d) CO Connect

The CO Connect provides access to the Telephone Company's Ethernet Private Line platform. The CO Connect is provided at DS3, DS1 and DS0 levels. The appropriate special access line from Section 5 will apply.

When a CO Connect is provided at a DS3 or DS1 level, the customer may order multiplexing, as shown in Section 5, at the end user serving wire center. The customer will be charged for the multiplexing in addition to the CO Connect.

When a CO Connect is ordered at a DS0 level, the customer must request a minimum of a DS1 interface at the IC customer wire center and will be charged for the appropriate payload (i.e., DS1 or DS3) at the IC customer wire center. The CO connect may be ordered as switched or special access.

(e) Reserved for Future Use

(f) Reserved for Future Use

(g) Reserved for Future Use

© 2022 Frontier Communications Parent, Inc. All rights reserved.

20. Optical Networking (Cont'd)

(D) Application of Rates and Charges (Cont'd)

(1) CONNECT (Cont'd)

(h) Express Connect #

The Express Connect provides a connection to the Telephone Company's Ethernet Private Line wire center(s) via a ring topology consisting of three nodes, one of which must be a Telephone Company serving wire center. When two of the nodes are customer designated locations, both must be served by the same serving wire center and only one customer location can be without an Express Connect CDL Node. The Express Connect is provided at a bandwidth of OC3, OC12 or OC48 and may be ordered under a one (1) year, three (3) year, five (5) year or seven (7) year Term Payment Plan (TPP).

The Express Connect has three rate elements, a "First System" with optional "Additional System(s) and Additional Express Nodes." The customer may order up to three "Additional Systems" of OC3, OC12, or OC48 bandwidth not to exceed OC12, OC48 or OC192 bandwidth capacity respectively. Rider charges for Express Connect are included in its monthly rate.

The customer may subscribe to -Banded Optical Transport with Express Connect.

The customer may also subscribe to Telephone Company provided banded SONET transport with Express Connect, provided that such connections are technically and operationally feasible, as determined by the Telephone Company.

The Express Connect may be ordered as switched or special access.

Effective August 15, 2009, orders for new Express Connect First Systems, Additional CDL Nodes, and/or Additional CO Nodes are no longer permitted. The Telephone Company will continue to provide Express Connect pursuant to this Section 20 on any existing Express Connect that is in-service as of August 15, 2009, or any order for Express Connect that is placed with the Telephone Company prior to August 15, 2009, (collectively, Existing Express Connect). Changes in bandwidth capacity, moves, and/or rearrangements are not permitted.

© 2022 Frontier Communications Parent, Inc. All rights reserved.

20. Optical Networking (Cont'd)

(D) Application of Rates and Charges (Cont'd)

(1) CONNECT (Cont'd)

(i) Flex Express Connect #

The Flex Express Connect provides a connection to the Telephone Company's Ethernet Private Line wire center(s) via ring topology with a minimum of four nodes, two of which must be Telephone Company wire centers. When two or more of the nodes are customer designated locations, only one of those nodes may be without a Flex Express CDL Node. The Flex Express Connect is provided at a bandwidth of OC3, OC12 or OC48.

Flex Express Connect is comprised of four rate elements, a "First System" with optional "Additional System(s)", Additional Flex Nodes, and Flex Express Transport. The customer may order up to three "Additional System(s)" of OC3, OC12 or OC48 not to exceed OC12, OC48 or OC192 bandwidth capacity, respectively.

Flex Express Transport is applied to the entire circumference of the service and is measured from the serving wire center of the customer designated location(s) and the CO Nodes. Flex Express Transport is ordered with the "First System" and each "Additional System" Flex Express Connect in OC3, OC12 or OC48 bandwidth not to exceed OC12, OC48 or OC192 bandwidth capacity, respectively.

Effective August 15, 2009, orders for new Flex Express Connect First Systems, Additional CDL Nodes, and/or Additional CO Nodes are no longer permitted. The Telephone Company will continue to provide Flex Express Connect pursuant to this Section 20 on any existing Flex Express Connect that is in-service as of August 15, 2009, or any order for Flex Express Connect that is placed with the Telephone Company prior to August 15, 2009, (collectively, Existing Flex Express Connect). Changes in bandwidth capacity, moves, and/or rearrangements are not permitted.

© 2022 Frontier Communications Parent, Inc. All rights reserved.

20. Optical Networking (Cont'd)

(D) Application of Rates and Charges (Cont'd)

(1) CONNECT (Cont'd)

(i) Flex Express Connect # (Cont'd)

Flex Express may be ordered under a one (1) year, three (3) year or five (5) year or seven (7) year Term Payment Plan (TPP). After the initial order for Flex Express Connect, month-to-month rates shall apply for the additional Flex Nodes. When the TPP of the Flex Express "First System" expires and the customer does not renew the TPP as shown in 20(G)(2), the first Flex Express "Additional System" will assume the Flex Express "First System" rates.

The customer may subscribe to Banded Optical Transport with Flex Express Connect.

The customer may also subscribe to Telephone Company provided banded SONET transport with Flex Express Connect, provided that such connections are technically and operationally feasible, as determined by the Telephone Company.

Flex Express Connect may be ordered as switched or special access.

(j) Reserved for Future Use

Service availability limited. Refer to footnote on Page 20-6.

© 2022 Frontier Communications Parent, Inc. All rights reserved.

20. Optical Networking (Cont'd)

(D) Application of Rates and Charges (Cont'd)

(1) CONNECT (Cont'd)

(j) Custom Connect#

The Custom Connect provides a connection to the Telephone Company's Optical Network and an access customer's designated location (CDL) or EIS arrangement. The Custom Connect is typically comprised of CO Nodes, CDL Links or SONET Premises Nodes, Transport and Riders. Certain configurations involving connection to an advanced data service may not require all of these rate elements. Each Custom Connect must consist of a minimum of two customer designated locations or one customer designated location or EIS arrangement and a wire center where connection to an advanced data service occurs. At least one of the locations must be a CDL Link.

The Custom Connect may be ordered as switched or special access. The Concatenated/Non-concatenated Custom Connect CDL Link is provided with a two fiber network interface. Where technically feasible, the Concatenated/Non-concatenated CDL Link may be optionally ordered with four fiber, 1+1 protected network interface, as Single or Diverse Route.

Custom Connect may connect to Intellilight® Optical Transport Service (IOTS) optical transport channels or may be provided over an IOTS backbone network as set forth in 20.1 following. IOTS combines DWDM and SONET technologies to create a high-speed backbone network.

Custom Connect Single Route and Diverse Route at OC12c and OC48c may also connect to an advanced data service at designated Telephone Company wire centers.

Custom Connect may also be connected to the following Telephone Company provided services, where such connections are technically and operationally feasible, as determined by the Telephone Company:

- dedicated SONET ring service
- point-to-point SONET service
- optical hubbing service
- DWDM ring service
- SONET entrance facility service
- ethernet private line service

The following footnote is not applicable to the DS1, E1, DS3, or STS1 Rider rate elements or the DS1, E1, or DS3/STS1 Shared Transport rate elements of Custom Connect. This service is grandfathered and effective March 30, 2007, orders for new Custom Connect are no longer permitted.

© 2022 Frontier Communications Parent, Inc. All rights reserved.

20. Optical Networking (Cont'd)

(D) Application of Rates and Charges (Cont'd)

(1) CONNECT (Cont'd)

(j) Custom Connect#

Custom Connect may also be provided over a Telephone Company provided DWDM ring backbone network, provided that such configurations are technically and operationally feasible, as determined by the Telephone Company.

CO Node

The CO Node rate element is applicable for each central office that is equipped with a fiber optic terminal in which the customer requests the ability to add/drop traffic to a CDL. Traffic is dropped from the CO Node via ports (lower speed drops). The CO Node may be ordered when a customer requires OC level multiplexing on the Custom Connect. If the customer wants to drop traffic below a DS3 at the CO Node, the customer must request a minimum DS1 interface and appropriate special access lines from Section 5. The CO Node may also be used when the customer wants to add/drop DS1 or DS3 traffic to a CDL located between the service areas shown under Section 5.2.7(H). The OC192 CO Node's ability to drop traffic below an OCn level is limited to new and in-service terminals technically capable of providing such directly from the ADM. See Rider section, herein, for further details. The appropriate multiplexing and access lines and transport rates from Section 5 will apply in addition to the CO Node and appropriate rider charges. However, multiplexing rates from Section 5 will not apply when the following conditions are met:

(1) The Customer requests to drop a DS3 from a CO Node for the purpose of establishing a DS3 multiplexed facility in its serving wire center; and
(2) the Customer subscribes to and is billed for the CO Node rate element; and
(3) the Customer CO Node is located in the same central office building where the DS3 multiplexed facility is to be located.

When the Customer CO Node is not located within the wire center serving the CDL, rates including the 3/1 multiplex rates apply as set forth in Section 5 and other Sections of this tariff. These charges are in addition to the appropriate CO Node, rates associated with transport of the DS3 facility to the wire center where the CO Node is located and rider charges applicable under this Section 20.

The CO Node, or in the alternative a CDL Link and multiplexer, is also required when Custom Connect provides the optical transmission facilities that connect an advanced data service to a CDL or to an EIS arrangement located in a different wire center.

The CO Node may be ordered at an OC3, OC12, OC48 or OC192 bandwidth capacity.

© 2022 Frontier Communications Parent, Inc. All rights reserved.

20. Optical Networking (Cont'd)

(D) Application of Rates and Charges (Cont'd)

(1) CONNECT (Cont'd)

(j) Custom Connect#

CDL Link

The CDL Link rate element is applicable for each customer designated location in which the customer requests the ability to add/drop traffic. The CDL Link is offered as Single Route, Diverse Route or Ring Route and may be ordered with premise multiplexer provided or with premise fiber meet provided as OC3, OC12, OC48 or OC192 bandwidth capacity. Only one CDL Link per connect may be ordered with premise fiber meet provided. The premise fiber meet will terminate on a fiber cross connect panel at the demarcation point. CDL Link with premise fiber meet is not available for jointly provided meetpoint arrangements except where Verizon provides a node within its network to the customer.

If more than two Links or Nodes are ordered on the same order, the CDL Link must be ordered as a Ring Route CDL Link. A Ring Route CDL Link has a minimum of three nodes, one of which must be located in a Telephone Company wire center. A Custom Connect ordered via a ring topology will be provided with a service guarantee as shown in 2.8.1.1(A)(9). When Custom Connect is configured in a ring topology and is ordered under a meet point billing arrangement in which the Telephone Company acts as an intermediate carrier as set forth in Section 2.7.3 preceding, a CO Node is required.

The CDL Link may be ordered as Single Route or Diverse Route with concatenated or non-concatenated optical interface for OC3/OC3c, OC12/OC12c and OC48/OC48c. These CLD Links will terminate on a fiber cross connect panel at the demarcation point. The rider charges are included in the monthly rate for these CDL Links.

The CDL Link may also be ordered as 1.25 Gbps and 2.5 Gbps Single Route or Diverse Route. This CDL Link cannot ride a higher level facility and can only be ordered CDL to CDL.

When Custom Connect is provided over an IOTS backbone and the transport between the nodes is provided using IOTS optical transport channels, a SONET Premises Node applies in lieu of the CDL Link to each customer designated location of the Custom Connect ring where SONET multiplexing is required.

When Custom Connect is provided over a Telephone Company provided DWDM backbone and the transport between the nodes is provided using DWDM optical transport channels, a SONET Premises Node applies in lieu of the CDL Link to each customer designated location of the Custom Connect ring where SONET multiplexing is required.

© 2022 Frontier Communications Parent, Inc. All rights reserved.

20. Optical Networking (Cont'd)

(D) Application of Rates and Charges (Cont'd)

(1) CONNECT (Cont'd)

(j) Custom Connect#

CDL Link with Optical Cross Connect

The CDL Link with Optical Cross Connect provides the communications path between the Telephone Company provided electronics and a customer's transmission equipment and facilities where the customer is provided EIS as defined in Section 17. This rate element includes the intra-office connection from the Telephone Company fiber optic terminal and the optical jumpers to facilitate the cross connect to the customer's transmission equipment and facilities within the Telephone Company wire center. When the CDL Link with Optical Cross Connect is provided, an Optical Facility Termination as set forth in Section 17.9.3 is not applicable. This rate element allows connectivity to Verizon Dedicated SONET Ring (DSR), a Telephone Company provided dedicated SONET ring or an advanced data service.

The CDL Link with Optical Cross Connect will be provided as single route without telephone company provided electronics at OC3, OC3c, OC12, OC12c, OC48, OC48c or OC192 bandwidth levels as ordered by the customer.

When Custom Connect is configured to another customer designated location, the appropriate CDL Link rate element is applicable from the customer-designated location to the serving wire center. In this case, the CDL Link rate element applies in addition to the CDL Link with Optical Cross Connect rate element. Rates for the CDL Link with Optical Cross Connect are shown in 20(L)(33) will apply in addition to other charges specified in Section 17.

Network Channel Interfaces

The network channel interface codes define the bit rates that are available. Network Channel interfaces and codes are defined below:

Service	Ports	Codes
OC3, OC3c	2 Fiber	02SOF.D(B&F)
OC3, OC3c	4 Fiber, 1+1 Protection	04SOF.D(B&F)
STM1	2 Fiber	02SOF.D(B&F)
STM1	4 Fiber, 1+1 Protection	04SOF.D(B&F)
OC12, OC12c, STM4	2 Fiber	02SOF.D(B&F)
OC12, OC12c, STM4	4 Fiber, 1+1 Protection	04SOF.D(B&F)
OC48, OC48c	2 Fiber	02SOF.D(B&F)
OC48, OC48c	4 Fiber, 1+1 Protection	04SOF.D(B&F)

© 2022 Frontier Communications Parent, Inc. All rights reserved.

20. Optical Networking (Cont'd)

(D) Application of Rates and Charges (Cont'd)

(1) CONNECT (Cont'd)

(j) Custom Connect#

Transport

Transport may be ordered as shared or dedicated. Shared Transport is applicable when the transport between nodes and/or Links is ordered at different bandwidth levels. The Dedicated Transport is applicable when transport between the Nodes and/or Links is of the same bandwidth level. Dedicated Transport is also applicable when transport between a wire center offering connection to an advanced data service and the CDL Link or CLD Link with Optical Cross Connect, as applicable.

Shared Transport may be ordered in bandwidths if DS1, DS3/STS1, OC3, OC3c, E1, OC12, OC12c, OC48 or OC48c. Dedicated Transport may be ordered in bandwidths of OC3, OC3c OC12, OC12c, OC48, OC48c and OC192, 1.25 Gbps and 2.5 Gbps. The transport is mileage sensitive and will be calculated based on the V&H coordinates of the wire centers comprising each segment of the custom connect service. DS1, E1, and DS3/STS1 Shared Transport may also be ordered in combination with Telephone Company provided point-to-point SONET service.

The Transport is provided at a flat-rated monthly recurring charge.

When point to point Custom Connect is provided over an Intellilight® Optical Transport Service (IOTS) backbone network as set forth in Section 20.1 following, connection between the Custom Connect nodes is provided using an IOTS optical transport channel in lieu of Custom Connect transport. When Custom Connect configured in a ring topology is provided over an IOTS backbone network, connection between the SONET nodes (Custom Connect CO Nodes and/or SONET Premises Nodes) is provided using unprotected IOTS optical transport channels as set forth in Section 20.1 in lieu of Custom Connect transport. Since protection is inherent in the Custom Connect service, protection is not required on the IOTS optical transport channels.

When point-to-point Custom Connect is provided over a Telephone Company provided DWDM backbone network, connection between the Custom Connect nodes is provided using a DWDM optical transport channel in lieu of Custom Connect transport. When Custom Connect configured in a ring topology is provided over a Telephone Company provided DWDM backbone network, connection between the SONET nodes (Custom Connect CO Nodes and/or SONET Premises Nodes) is provided using unprotected DWDM optical transport channels in lieu of Custom Connect transport. Since protection is inherent in the Custom Connect service, protection is not required on the DWDM optical transport channels.

© 2022 Frontier Communications Parent, Inc. All rights reserved.

20. Optical Networking (Cont'd)

(D) Application of Rates and Charges (Cont'd)

(1) CONNECT (Cont'd)

(j) Custom Connect#
Transport

Connection of Custom Connect configured in a ring topology to an IOTS ring is provided over an equal speed, unprotected optical transport channel (e.g., an OC3 Custom Connect node would connect to a 155.52 Mbps unprotected IOTS channel). Each node of a Custom Connect ring must be located at the same customer designated location or central office as its corresponding IOTS node.

Connection of Custom Connect configured in a ring topology to a Telephone Company provided DWDM ring is provided over an equal speed, unprotected optical transport channel (e.g., an OC3 Custom Connect node would connect to a 155.52 Mbps unprotected DWDM channel). Each node of a Custom Connect ring must be located at the same customer designated location or central office as its corresponding DWDM node.

Rider

The Rider is the customer's service(s) traversing a higher bandwidth level. Riders may be provided at DS1, DS3, OC3, OC3c, OC12, OC12c, OC48, OC48c, STS1, E1, STM1 or STM4 bandwidth levels as required by the customer. DS1, E1, DS3, and STS1 Riders may also be ordered in combination with Telephone Company provided point-to-point SONET service.

The Rider is provided at a flat-rated monthly recurring charge and is applicable per rider circuit ordered. A Rider is not charged with a CDL Link – Single or Diverse Route – Concatenated/Non-concatenated optical interface. The Rider charges for Express Connect or Flex Express Connect are included in their monthly rates.

Four fiber 1+1 protection consists of two cards in the add/drop multiplexer, one working card and a second, standby card to provide automatic protection from a fault in the working card. The four fiber 1+1 protection is available with all Telephone Company provided add/drop multiplexers and with compatible CPE and applies per CDL. When a Rider is ordered with four fiber 1+1 protection, the protection charge applies in addition to the charge for the Rider. Prior to December 28, 2002, the Telephone Company provided four fiber, 1+1 protection at no charge, upon request of the customer. Customers with those interface arrangements on their Riders are grandfathered as of December 28, 2002, and are not subject to the optional feature charge.

Intrastate Riders may be transported on the customer's interstate Optical Networking facility.In jointly provided meetpoint arrangements, rider charges apply in addition to other applicable charges when Verizon provides any OCn mux node, whether provided at the customer premise or in the central office.

© 2022 Frontier Communications Parent, Inc. All rights reserved.

20. Optical Networking (Cont'd)

(D) Application of Rates and Charges (Cont'd)

(1) CONNECT (Cont'd)

(j) Custom Connect#

Acceptable rider speeds allowed by node type are as follows:

NODES:	OC3	OC12	OC48	OC192	
DS1 Rider	X	X*	X*	X*	
DS3 Rider	X	X	X	X*	
STS1 Rider	X	X	X	X	
OC3/OC3c Rider		X	X	X	
OC12/OC12c Rider				X	X
OC48/OC48c Rider				X	

* This provision is only available from nodes that are technically capable of providing DS1 and DS3 drops directly from the OCn node terminal. The maximum capacity utilization that can be delivered by a OCn node terminal selected by the customer may be limited by the number and type of riders that are provisioned on the OCn node and are limited by the maximum number of interfaces available to the OCn backplane. Where the OCn terminal is technically capable of supporting lower bandwidth OCn nodes as a sub-multiplexer, Verizon may provide such at the customer premise and Central Office Node locations at the tariffed CO Node rates per sub-multiplexer node deployed.

SONET Premises Node - IOTS

The SONET Premises Node rate element applies at each CDL at which a SONET node is needed to complete a Custom Connect ring over an IOTS backbone network. The functionality and capabilities of the SONET Premises Node are the same as those specified for the CO Node preceding. The SONET Premises Node will only be provided when Custom Connect is configured in a ring or point to point topology in which the transport between the nodes (CO Node and/or SONET Premises Nodes) is provided using IOTS optical transport channels. IOTS is described in Section 20.1 following. The SONET Premises Node applies in lieu of the Custom Connect CDL Link.

The SONET Premises Node rate element also applies at each CDL at which a SONET node is needed to complete a Custom Connect ring over a Telephone Company provided DWDM backbone network. The SONET Premises Node will only be provided when Custom Connect is configured in a ring or point-to-point topology in which the transport between the nodes (CO Node and/or SONET Premises Nodes) is provided using DWDM optical transport channels. The SONET Premises Node applies in lieu of the Custom Connect CDL Link.

© 2022 Frontier Communications Parent, Inc. All rights reserved.

20. Optical Networking (Cont'd)

(D) Application of Rates and Charges (Cont'd)

(2) Optical Network Transport*

The transport element provides for the interoffice Optical Network transport between wire centers on Telephone Company defined LANs. Each IC customer Connect must have its own transport. Transport cannot be shared among IC customer Connects.

Optical Network Transport may be provided as LAN-wide, LAN-wide Premium or Point-to-Point. J-SONET Transport may be purchased in DS0, DS1, or DS3 bandwidths. Band SONET Transport may be purchased in DS0, DS1, or DS3 Bandwidths.

(a) Reserved for Future Use

(b) Reserved for Future Use

(c) Reserved for Future Use

(d) Reserved for Future Use

(e) J-SONET Transport provides transport between the serving wire centers of the CDLs. J-SONET Transport may be provided at DS0, DS1 or DS3 bandwidth levels as required by the customer. The bandwidth of the transport must be the same as the bandwidth of the CO Connect or the payload, e.g., DS0 J-SONET requires a DS0 connect and DS3 J-SONET Transport requires a DS3 CO Connect. J-SONET Transport may be ordered as switched or special access.

J-SONET Transport is provided at a non-distance sensitive flat rated monthly charge per LAN traversed.

* Grandfathered to existing service effective December 26, 1998.

© 2022 Frontier Communications Parent, Inc. All rights reserved.

20. Optical Networking (Cont'd)

(D) Application of Rates and Charges (Cont'd)

(2) Optical Network Transport* (Cont'd)

The transport element provides for the interoffice Optical Network transport between wire centers on Telephone Company defined LANs. Each IC customer Connect must have its own transport. Transport cannot be shared among IC customer Connects.

Optical Network Transport may be provided as LAN-wide, LAN-wide Premium or Point-to-Point. Band SONET Transport may be purchased in DS0, DS1, or DS3 Bandwidths.

(f) Banded Optical Transport provides transport between the serving wire center of the interexchange access customer's location and the access customer's end user premises. Banded Optical Transport may be provided at DS0, DS1, DS3, or STS1 bandwidth levels as required by the customer. When Banded Optical is ordered at a DSO level, the customer must request a minimum of a DS1 interface at the IC customer wire center and will be charged for the appropriate rider (i.e., DS1 or DS3). Banded Optical Transport is provided with a service guarantee as shown in 2.8.1.1(A)(9). For subscription to Banded Optical Transport, the customer must have an accumulative demand requirement, whether provided pursuant to this Section 20 or as Telephone Company provided banded SONET transport, equivalent to an average of nine DS3s, i.e., 5,978 channels, per LATA. The Telephone Company will include Banded Optical Transport ordered pursuant to this Section 20 and Telephone Company provided banded SONET transport for the customer’s accumulative demand requirement. The bandwidth will be reviewed annually at a mutually agreed upon date by the customer and the Company. An allowance of minus 2% will be considered as having met the commitment level. Should the bandwidth fall below minus 2%, the customer will have thirty (30) days to meet the bandwidth requirement. If not met, the customer will be notified by the Telephone Company and will be required to convert from Banded Optical Transport to another Ethernet Private Line Transport option.

* Grandfathered to existing service effective December 26, 1998.

© 2022 Frontier Communications Parent, Inc. All rights reserved.

20. Optical Networking (Cont'd)

(D) Application of Rates and Charges (Cont'd)

(2) Optical Network Transport* (Cont'd)

(f) (Cont'd)

Banded Optical Transport is provided at a flat-rated monthly charge for one (1) year, three (3) year, five (5) year, or seven (7) year Term Payment Plans (TPPs). The term period for Banded Optical Transport cannot exceed the term period of the Connect. Banded Optical Transport includes the special access line from the end user serving wire center to the end user premises, for both on-net and off-net, with the exception of jointly provided Banded Optical Transport. Banded Optical Transport will be provisioned at the highest network facility available at the time of the order. The monthly rate will be determined based on the mileage between the serving wire centers of the customer designated locations and is applicable on a per circuit basis. Mileage will be rounded up to the next whole mile except when the CDLs are collocated.

When both customer designated locations are provided by the Telephone Company, wholly provided, the monthly rates as shown in 20(L)(66) are applicable. When one of the customer designated locations is provided by another telephone company, or the customer terminates at a multiplexer in a wire center on the IOF, jointly provided, the monthly rates as shown in 20(L)(67) shall apply. For jointly provided transport with another telephone company, the meet point billing mileage calculation is specified in Section 2.7.3.

Banded Optical Transport may be ordered as switched or special access.

* Grandfathered to existing service effective December 26, 1998.

© 2022 Frontier Communications Parent, Inc. All rights reserved.

20. Optical Networking (Cont'd)

(D) Application of Rates and Charges (Cont'd)

(3) Payload*

Payload is the customer service riding on the shared IOF transport and/or the activation of the service(s). Payload is provided at a flat-rated monthly recurring charge which includes add/drop multiplexing and is applicable at the wire center for each customer designated location, with the exception of CO Connects and Banded Optical Transport. Payload services include DS1, DS3, OC3, OC3c, OC12, OC12c, STS1 and STM1. Payload services may be ordered as switched or special access.

The monthly rates for DS1 payloads are shown in 20(L).

(E) Reserved for Future Use

(F) Reserved for Future Use

* Grandfathered to existing service effective December 26, 1998.

© 2022 Frontier Communications Parent, Inc. All rights reserved.

20. Optical Networking (Cont'd)

(G) Rate Regulations

Optical Networking may be ordered under a one (1), three (3), five (5), or seven (7) year Term Payment Plan (TPP). Any TPP for these services is subject to an TPP Termination Liability Charge as specified herein.

When ordered together the TPP applies to Connects, Banded Optical Transport and Additional Nodes

(1) Changes in Length of a TPP

Prior to the expiration of a TPP period, the customer may elect to convert to a new TPP period of the same or different length, subject to the following conditions:

- No credit will be given for the new period for payments made under the original TPP arrangement.
- NRCs will not be reapplied for existing services.
- If the new TPP period is shorter in length than the time remaining under the existing TPP, the change to the new TPP period constitutes a disconnect of the existing TPP service and termination liability charges will apply.
- The rates for the new period will be the rates currently in effect at the time of the change.
- If the customer subscribes to a new TPP which is greater in length than the initial TPP term and discontinues one or all of the service elements prior to the expiration of the new termination liability period, the termination liability, as set forth below, will apply based on the remainder of the TPP period in effect at the time of the disconnect.

Year in which Service Is Discontinued	Liability Rate
1	100%
2	75%
3	50%
4 or more	25%

© 2022 Frontier Communications Parent, Inc. All rights reserved.

20. Optical Networking (Cont'd)

(G) Rate Regulations (Cont'd)

(2) Renewal Options

Ninety (90) days prior to the expiration of the existing TPP, the customer shall submit in writing to select a new TPP or disconnect service. If no notice is received, the Company will automatically reconnect the customer to a new TPP with the same term life as the previous.

After completion of the initial TPP term and the customer subscribes to a new term that is longer in length the termination liability, as set forth below, will apply based on the remainder of the TPP period in effect at the time of the disconnect.

Year in which Service Is Discontinued	Liability Rate
1	20%
2	15%
3	10%
4 or more	5%

(3) Conversion

When an existing customer purchases Optical Networking, the customer may upgrade their existing special access services to Optical Networking. The upgrade may require physical network changes, as well as changes to existing billing arrangements. Physical changes consist of reterminating existing services not currently utilizing the Optical network.

Termination liability charges will not apply to the customer's existing services provided the Optical Networking TPP term commitment agreement is equal to or longer in length than the time remaining for the existing arrangement.

(4) Rate Changes

The TPP rates are exempt from Telephone Company initiated increases for the length of the plan, however, decreases will be passed on to the customer. Rate changes may occur as a result of FCC action.

© 2022 Frontier Communications Parent, Inc. All rights reserved.

FACILITIES FOR INTERSTATE ACCESS

20. Optical Networking (Cont'd)

(G) Rate Regulations (Cont'd)

(5) Termination Liability

In the event the customer discontinues one or all of the service elements (Connect, Banded Optical Transport, Additional Node) prior to the end of the termination liability period, initial termination liability charges, as set forth below, will apply based on the remainder of the TPP period in effect at the time of the disconnect.

Year in which Service Is Discontinued	Liability Rate
1	40%
2	35%
3	30%
4 or more	25%

(6) Termination Without Liability

For Banded Optical Transport, termination charges will not apply when the customer disconnects a DS0 or DS1 on a circuit by circuit basis provided the required accumulative bandwidth is met as shown in 20(D)(2)(f).

(7) Upgrade to Higher Bandwidth

The Customer who has grown incrementally, may elect to upgrade service to a higher bandwidth during a TPP period to gain economic efficiencies. Termination charges will not apply as long as the upgraded service remains connected at the same point of termination(s), unless the network is being redesigned to gain network efficiency. Nonrecurring charges associated with the new bandwidth upgrade shall apply.

(8) Change in Interface

The Customer may elect to change service from a 2-fiber interface to a 4-fiber interface during a TPP. Termination charges will not apply as long as the changed service remains at the same point of termination(s).

© 2022 Frontier Communications Parent, Inc. All rights reserved.

20. Optical Networking (Cont'd)

(H) Off-Net Wire Center

Off-Net wire center is a wire center not a designated Optical Networking wire center office. The customer may order a DS0, DS1, DS3 or E1 to the Off-Net wire center. Mileage charges will be determined based on airline miles to the nearest on-net wire center at the transport rates shown in Section 5.

Circuits connected to the Off-Net wire center will be billed existing tariffed rates as shown in Section 5.

(I) Shared Use

Shared Use is the provisioning of Switched Access over Optical Networking. Rating as Optical Networking will continue until such time as a portion of the available Optical Networking capacity is used to provide Switched Access service.

For shared use, a special access DS3 interface must be ordered between the IC customer and the IC customer wire center. When switched trunks are ordered, a DS1 switched interface must be ordered for the switched trunks. A DS3 or DS1 interface ordered as Switched Access will be used exclusively for Switched Access.

As individual channels are activated for Switched Access, monthly charges will be adjusted between Switched Access and Optical Networking Access based on the number of channels used for Switched Access and the remaining Optical Networking Access facility.

The total Shared Use for Switched Access charge is equal to the number of channels used for Switched Access divided by 24 for DS1 or 672 for DS3 times the Monthly Switched Access Charges. The monthly Switched Access rates used will be the current rates for Switched Access Entrance Facility, Direct-Trunked Transport Facility, Direct-Trunked Transport Termination and Multiplexer.

(J) Reserved for Future Use

© 2022 Frontier Communications Parent, Inc. All rights reserved.

FACILITIES FOR INTERSTATE ACCESS

20. Optical Networking (Cont'd)

(K) Optical Networking LANs *

State	CLLI	Wire Center	LAN Name	Contiguous LAN
CA	CMRLCAXF	CAMARILLO	Thousand Oaks	
CA	ELRICAXF	EL RIO	Thousand Oaks	
CA	MUGUCAXF	MUGU	Thousand Oaks	
CA	NWPKCAXF	NEWBURY PARK	Thousand Oaks	
CA	OXNRCAXF	OXNARD	Thousand Oaks	
CA	OXNRCAXG	MANTILLA	Thousand Oaks	
CA	THOKCAXF	THOUSAND OAKS	Thousand Oaks	
CA	THOKCAXH	CONEJO	Thousand Oaks	
CA	BELRCAXF	BEL AIR	Santa Monica/West LA	
CA	GRHLCAXF	GRANADA HILLS	Santa Monica/West LA	
CA	MALBCAXF	ZUMA	Santa Monica/West LA	
CA	MALBCAXG	MALIBU	Santa Monica/West LA	
CA	PACMCAXF	PACOIMA	Santa Monica/West LA	
CA	SNFNCAXG	SAN FERNANDO	Santa Monica/West LA	
CA	SNLDCAXF	SUNLAND/TUJUNGA	Santa Monica/West LA	
CA	SNMNCAXG	SANTA MONICA	Santa Monica/West LA	
CA	SNMNCAXJ	SUNSET	Santa Monica/West LA	
CA	SPLVCAXF	SEPULVEDA	Santa Monica/West LA	
CA	SYLMCAXF	SYLMAR	Santa Monica/West LA	
CA	WLANCAXF	WEST LOS ANGELES	Santa Monica/West LA	
CA	WLANCAXG	WESTWOOD	Santa Monica/West LA	
CA	WLANCAXH	BUNDY SM	Santa Monica/West LA	
CA	WLANCAXJ	UNIVERSITY	Santa Monica/West LA	
CA	LNCSCAXG	LANCASTER	Santa Monica/West LA	
CA	CLCYCAXG	MAR VISTA	Santa Monica/West LA	Long Beach
CA	CRPRCAXF	CARPINTERIA	Santa Barbara	
CA	ELWDCAXF	ELLWOOD	Santa Barbara	
CA	GOLTCAXF	GOLETA	Santa Barbara	
CA	MNTTCAXF	MONTECITO	Santa Barbara	
CA	SNBBCAXF	SANTA BARBARA	Santa Barbara	
CA	SNBBCAXG	LAS POSITAS	Santa Barbara	
CA	LMPCCAXF	LOMPOC	Santa Barbara	
CA	ORCTCAXG	BRADLEY	Santa Barbara	
CA	SNTMCAXF	SANTA MARIA	Santa Barbara	
CA	SURFCAXF	SURF	Santa Barbara	

* Reference 20(C) for availability of service.

© 2022 Frontier Communications Parent, Inc. All rights reserved.

FACILITIES FOR INTERSTATE ACCESS

20. Optical Networking (Cont'd)

(K) Optical Networking LANs * (Cont'd)

State	CLLI	Wire Center	LAN Name	Contiguous LAN
CA	EDMTCAXF	EDGEMONT	San Bernardino	
CA	LMLNCAXF	LOMA LINDA	San Bernardino	
CA	MENTCAXF	MENTONE	San Bernardino	
CA	MSCYCAXF	MUSCOY	San Bernardino	
CA	MURTCAXF	MURRIETA	San Bernardino	
CA	RDLDCAXF	REDLANDS	San Bernardino	
CA	CCMNCAXF	CUCAMONGA	San Bernardino	
CA	BUMTCAXF	BEAUMONT	San Bernardino	
CA	ELSNCAXG	ELSINORE GRAND	San Bernardino	
CA	ETWNCAXF	ETIWANDA	San Bernardino	
CA	SNCYCAXF	SUN CITY	San Bernardino	
CA	PERSCAXF	PERRIS	San Bernardino	
CA	SNBRCAXH	MARSHALL	San Bernardino	
CA	SNBRCAXK	SAN BERNARDINO	San Bernardino	
CA	ELSNCAXF	ELSINORE MAIN	San Bernardino	
CA	HEMTCAXF	HEMET	San Bernardino	
CA	AZUSCAXF	AZUSA	Ontario	
CA	BLPKCAXF	BALDWIN PARK	Ontario	
CA	CHNOCAXF	CHINO	Ontario	
CA	CLMTCAXF	CLAREMONT	Ontario	
CA	COVNCAXF	COVINA	Ontario	
CA	DMBRCAXF	DIAMOND BAR	Ontario	
CA	GLNDCAXF	GLENDORA	Ontario	
CA	LAPNCAXF	ROWLAND	Ontario	
CA	LAPNCAXG	LA PUENTE	Ontario	Bellflower/Whittier
CA	LAPNCAXL	MAPLEGROVE	Ontario	
CA	LSSRCAXF	LOS SERRANOS	Ontario	
CA	LVRNCAXF	LA VERNE	Ontario	
CA	MNRVCAXG	MONROVIA	Ontario	
CA	ONTRCAXM	ONTARIO AIRPORT	Ontario	
CA	ONTRCAXG	ONTARIO SOUTH	Ontario	
CA	ONTRCAXF	ONTARIO	Ontario	San Bernardino
CA	ONTRCAXP	ONTARIO	Ontario	
CA	POMNCAXF	POMONA	Ontario	
CA	SNDMCAXF	SAN DIMAS	Ontario	
CA	SRMDCAXF	SIERRA MADRE	Ontario	
CA	WLNTCAXF	WALNUT	Ontario	
CA	UPLDCAXF	UPLAND	Ontario	San Bernardino

* Reference 20(C) for availability of service.

© 2022 Frontier Communications Parent, Inc. All rights reserved.

FACILITIES FOR INTERSTATE ACCESS

20. Optical Networking (Cont'd)

(K) Optical Networking LANs * (Cont'd)

State	CLLI	Wire Center	LAN Name	Contiguous LAN
CA	HNBHCAXF	SLATER	Long Beach	
CA	HNBHCAXG	HUNTINGTON BEACH	Long Beach	
CA	HNBHCAXH	BUSHARD	Long Beach	
CA	HNBHCAXL	WARNER	Long Beach	
CA	HRBHCAXA	REDONDO	Long Beach	
CA	LNBHCAXF	LONG BEACH MAIN	Long Beach	
CA	LNBHCAXJ	LONG BEACH	Long Beach	
CA	LNBHCAXH	MARKET	Long Beach	
CA	LNBHCAXL	MARTIN L. KING	Long Beach	
CA	LNBHCAXM	CLARK	Long Beach	
CA	LNBHCAXT	TERMINO	Long Beach	
CA	MNBHCAXF	MANHATTAN	Long Beach	
CA	PDRYCAXF	DEL REY	Long Beach	Santa Monica/West LA
CA	RDBHCAXF	EL NIDO	Long Beach	
CA	RLHLCAXF	ROLLING HILLS	Long Beach	
CA	LNBHCAXS	STADIUM	Long Beach	Bellflower/Whittier
	CA	SLBHCAXF	ALAMITOS	Long Beach
CA	TRNCCAXF	DEL AMO	Long Beach	
CA	TRNCCAXG	PALOS VERDES	Long Beach	
CA	WMNSCAXF	WESTMINSTER	Long Beach	
CA	ARTSCAXF	ARTESIA	Bellflower/Whittier	Long Beach
CA	BLFLCAXF	BELLFLOWER	Bellflower/Whittier	
CA	BLGRCAXF	FLORENCE	Bellflower/Whittier	
CA	DWNYCAXF	DOWNEY	Bellflower/Whittier	
CA	DWNYCAXG	IMPERIAL	Bellflower/Whittier	
CA	LAHBCAXF	LA HABRA	Bellflower/Whittier	
CA	LNBHCAXS	STADIUM	Bellflower/Whittier	Long Beach
CA	NRWLCAXF	NORWALK	Bellflower/Whittier	
CA	NRWLCAXG	ALONDRA	Bellflower/Whittier	
CA	PCRVCAXF	RIO HONDO	Bellflower/Whittier	
CA	WHTRCAXF	WHITTIER SOUTH	Bellflower/Whittier	
CA	WHTRCAXG	WHITWOOD	Bellflower/Whittier	
CA	WHTRCAXH	VALLEY VIEW	Bellflower/Whittier	
CA	WHTRCAXJ	PICO	Bellflower/Whittier	
CA	NOVTCAXF	NOVATO	Navato	

* Reference 20(C) for availability of service.

© 2022 Frontier Communications Parent, Inc. All rights reserved.

FACILITIES FOR INTERSTATE ACCESS

20. Optical Networking (Cont'd)

(K) Optical Networking LANs * (Cont'd)

State	CLLI	Wire Center	LAN Name	Contiguous LAN
CA	PERSCAXF	PERRIS	Tri-Valley	
CA	HEMTCAXF	HEMET	Tri-Valley	
CA	RNCACAXF	RANCHO	Tri-Valley	
CA	ELSNCAXF	ELSINORE MAIN	Tri-Valley	
CA	SNCYCAXF	SUN CITY	Tri-Valley	
CA	RDLDCAXF	REDLANDS	Tri-Valley	
CA	SNJCCAXG	SAN JACINTO	Tri-Valley	
CA	SNYMCAXF	SUNNYMEAD	Tri-Valley	
CA	BUMTCAXF	BEAUMONT	Tri-Valley	
CA	VLVSCAXF	VAL VISTA	Tri-Valley	
CA	EDMTCAXF	EDGEMONT	Tri-Valley	
CA	HMLDCAXF	HOMELAND	Tri-Valley	
CA	MURTCAXF	MURRIETA	Tri-Valley	
CA	ELSNCAXG	ELSINORE GRAND	Tri-Valley	
CA	QUVYCAXF	QUAIL VALLEY	Tri-Valley	
CA	TMCLCAXG	TEMECULA	Tri-Valley	
CA	TMCLCAXH	RED HAWK	Tri-Valley	
CA	PLSPCAXG	PALM SPRINGS	Coachella Valley	
CA	PNMGCAXF	RANCHO MIRAGE	Coachella Valley	
CA	PLDSCAXF	PALM DESERT	Coachella Valley	
CA	DHSPCAXF	DESERT HOT SPRINGS	Coachella Valley	
CA	THPLCAXF	THOUSAND PALMS	Coachella Valley	
CA	BRDNCAXF	BERMUDA DUNES	Coachella Valley	
CA	INDICAXG	INDIO	Coachella Valley	
CA	CCHLCAXF	COACHELLA VALLEY	Coachella Valley	
CA	YCVYCAXG	YUCCA VALLEY	Coachella Valley	
CA	JSTRCAXF	JOSHUA TREE	Coachella Valley	
CA	TWPLCAXF	29 PALMS	Coachella Valley	
CA	TWPLCAXG	MARINE PALMS	Coachella Valley	

* Reference 20(C) for availability of service.

© 2022 Frontier Communications Parent, Inc. All rights reserved.

FACILITIES FOR INTERSTATE ACCESS

20. Optical Networking (Cont'd)

(K) Optical Networking LANs * (Cont'd)

State	CLLI	Wire Center	LAN Name	Contiguous LAN
FL	ALFAFLXA	ALAFIA	Wimauma	
FL	PLMTFLXA	PALMETTO	Wimauma	Sarasota/Bradenton
FL	RSKNFLXA	RUSKIN	Wimauma	
FL	WIMMFLXA	WIMAUMA	Wimauma	
FL	ANMRFLXA	ANNA MARIA	Sarasota/Bradenton	
FL	BRBAFLXA	BRADENTON BAY	Sarasota/Bradenton	
FL	BRTNFLXX	BRADENTON MAIN	Sarasota/Bradenton	
FL	ENWDFLXA	ENGLEWOOD	Sarasota/Bradenton	
FL	LGBKFLXA	LONGBOAT KEY	Sarasota/Bradenton	
FL	NRSDFLXA	SARASOTA NORTHSIDE		Sarasota/Bradenton
FL	UOSPRFLXA	OSPREY	Sarasota/Bradenton	
FL	PLSLFLXA	PALMA SOLA	Sarasota/Bradenton	
FL	SEKYFLXA	SIESTA KEY	Sarasota/Bradenton	
FL	SPRGFLXA	SARASOTA SPRINGS	Sarasota/Bradenton	
FL	SRSTFLXA	SARASOTA MAIN	Sarasota/Bradenton	
FL	SSDSFLXA	SARASOTA SOUTHSIDE		Sarasota/Bradenton
FL	VENCFLXA	VENICE MAIN	Sarasota/Bradenton	
FL	VENCFLXS	VENICE SOUTH	Sarasota/Bradenton	
FL	NRPTFLXA	NORTH PORT	Sarasota/Bradenton	
FL	ABDLFLXA	AUBURNDALE	Polk	
FL	HGLDFLXA	HIGHLANDS	Polk	
FL	LKLDFLXA	LAKELAND MAIN	Polk	
FL	LKLDFLXE	LAKELAND EAST	Polk	
FL	LKLDFLXN	LAKELAND NORTH	Polk	
FL	PTCYFLXA	PLANT CITY	Polk	
FL	PKCYFLXA	POLK CITY	Polk	
FL	WNHNFLXC	WINTER HAVEN	Polk	
FL	ZPHYFLXA	ZEPHYRHILLS	Polk	
FL	BAYUFLXA	BAYOU	St. Petersburg/Clearwater	
FL	CLWRFLXA	CLEARWATER	St. Petersburg/Clearwater	
FL	CNSDFLXA	COUNTRYSIDE	St. Petersburg/Clearwater	
FL	DNDNFLXA	DUNEDIN	St. Petersburg/Clearwater	
FL	FHSDFLXA	FEATHERSOUND	St. Petersburg/Clearwater	Hillsborough
FL	GNDYFLXA	GANDY	St. Petersburg/Clearwater	
FL	INRKFLXX	INDIAN ROCKS	St. Petersburg/Clearwater	

* Reference 20(C) for availability of service.

© 2022 Frontier Communications Parent, Inc. All rights reserved.

FACILITIES FOR INTERSTATE ACCESS

20. Optical Networking (Cont'd)

(K) Optical Networking LANs * (Cont'd)

State	CLLI	Wire Center	LAN Name	Contiguous LAN	
FL	LLMNFLXA	LEALMAN	St. Petersburg/Clearwater		
FL	LRGOFLXA	LARGO	St. Petersburg/Clearwater		
FL	NGBHFLXA	NORTH GULF BEACH	St. Petersburg/Clearwater		
FL	PNLSFLXA	PINELLAS	St. Petersburg/Clearwater		
FL	PSDNFLXA	PASADENA	St. Petersburg/Clearwater		
FL	SGBEFLXA	SOUTH GULF BEACH	St. Petersburg/Clearwater		
FL	SKWYFLXA	SKYWAY	St. Petersburg/Clearwater		
FL	SPBGFLXA	ST. PETERSBURG MAIN	St. Petersburg/Clearwater		
FL	SPBGFLXS	ST. PETERSBURG SOUTH	St. Petersburg/Clearwater		
FL	STGRFLXA	ST. GEORGE	St. Petersburg/Clearwater		Pasco
FL	HDSNFLXA	HUDSON	Pasco		
FL	MNLKFLXA	MOON LAKE	Pasco		
FL	NPRCFLXA	NEW PORT RICHEY	Pasco		
FL	SNSPFLXA	SEVEN SPRINGS	Pasco		
FL	TRSPFLXA	TARPON SPRINGS	Pasco		
FL	BHPKFLXA	BEACH PARK	Hillsborough		
FL	CRWDFLXA	CARROLLWOOD	Hillsborough		
FL	HYPKFLXA	HYDE PARK	Hillsborough		
FL	KYSTFLXA	KEYSTONE	Hillsborough		
FL	LUTZFLXA	LUTZ	Hillsborough		
FL	OLDSFLXA	OLDSMAR	Hillsborough	Pasco	
FL	SLSPFLXA	SULPHUR SPRINGS	Hillsborough		
FL	SMNLFLXA	SEMINOLE	Hillsborough		
FL	SWTHFLXA	SWEETWATER	Hillsborough		
FL	TAMPFLXE	TAMPA EAST	Hillsborough	Wimauma	
FL	TAMPFLXX	TAMPA MAIN	Hillsborough		
FL	TMTRFLXA	TEMPLE TERRACE	Hillsborough		
FL	UNVRFLXA	UNIVERSITY	Hillsborough		
FL	WLCHFLXA	WESLEY CHAPEL	Hillsborough		
FL	WLCRFLXA	WALLCRAFT	Hillsborough		
FL	WSSDFLXA	TAMPA WESTSIDE	Hillsborough		
FL	YBCTFLXA	YBOR	Hillsborough		
FL	BRNDFLXA	BRANDON	Hillsborough	Polk	
FL	LNLKFLA99H	LAND O'LAKES	Hillsborough		

* Reference 20(C) for availability of service.

© 2022 Frontier Communications Parent, Inc. All rights reserved.

FACILITIES FOR INTERSTATE ACCESS

20. Optical Networking (Cont'd)

(K) Optical Networking LANs * (Cont'd)

State	CLLI	Wire Center	LAN Name	Contiguous LAN
TX	GRLDTXXA	GARLAND MAIN	Plano	
TX	GRLDTXXB	GARLAND SOUTH	Plano	
TX	GRLDTXXC	GARLAND NORTH	Plano	
TX	PLANTXXA	PLANO MAIN	Plano	
TX	PLANTXXB	PLANO WEST	Plano	
TX	PLANTXXD	PLANO NORTHWEST	Plano	Carrollton/Lewisville
TX	PLANTXXF	PLANO CROSSCREEK	Plano	
TX	PLANTXXK	PLANO NORTH	Plano	
TX	WYLITXXA	WYLIE	Plano	
TX	SHMNTXXA	SHERMAN	Plano	
TX	DFIATXXA	DFW AIRPORT MAIN	Irving	
TX	DFIATXXA	DFW AIRPORT MAIN	Irving	
TX	IRNGTXXA	IRVING WEST	Irving	
TX	IRNGTXXB	IRVING MAIN	Irving	
TX	IRNGTXXC	IRVING EAST	Irving	
TX	IRNGTXXD	IRVING SOUTHWEST	Irving	
TX	IRNGTXXE	IRVING NORTH	Irving	
TX	IRNGTXXF	IRVING WOODBINE	Irving	
TX	IRNGTXXG	IRVING WALNUT HILL	Irving	
TX	CRTNTXXA	CARROLLTON MAIN	Carrollton/Lewisville	
TX	CRTNTXXB	CARROLLTON NORTH	Carrollton/Lewisville	
TX	CRTNTXXC	CARROLLTON NORTHEAST	Carrollton/Lewisville	Plano
TX	CRTNTXXD	CARROLLTON SOUTHEAST	Carrollton/Lewisville	
TX	GRPVTXXA	GRAPEVINE MAIN	Carrollton/Lewisville	Irving
TX	KLLRTXXA	KELLER MAIN	Carrollton/Lewisville	
TX	LWVLTXXA	LEWISVILLE MAIN	Carrollton/Lewisville	
TX	LWVLTXXB	LEWISVILLE SOUTH	Carrollton/Lewisville	Irving
TX	LWVLTXXC	LEWISVILLE WEST	Carrollton/Lewisville	
TX	LWVLTXXF	LEWISVILLE GARDEN RIDGE	Carrollton/Lewisville	
TX	LWVLTXXE	LEWISVILLE ROUND GROVE	Carrollton/Lewisville	
TX	DNTNTXXA	DENTON	Carrollton/Lewisville	

* Reference 20(C) for availability of service.

© 2022 Frontier Communications Parent, Inc. All rights reserved.

FACILITIES FOR INTERSTATE ACCESS

20. Optical Networking (Cont'd)

(K) Optical Networking LANs * (Cont'd)

State	CLLI	Wire Center	LAN Name	Contiguous LAN
TX	BRYNTXXA	BRYAN	Bryan	
TX	BRYNTXXB	BRYAN	Bryan	
TX	CLSTTXXA	COLLEGE STATION	Bryan	
TX	CLSTTXXB	COLLEGE STATION	Bryan	
TX	RWLTTXXA	ROWLETT MAIN	Rowlett	
TX	PLPTTXXA	PILOT POINT	Pilot Point	
TX	WHWRTXXA	WHITEWRIGHT	Whitewright	
TX	WHBOTXXC	WHITESBORO	Whitesboro	
TX	BYTNTXXA	BAYTOWN MAIN	Baytown	
TX	BYTNTXXC	BAYTOWN NORTH	Baytown	
TX	BYTNTXXB	BAYTOWN WEST	Baytown	
TX	CRSBTXXA	CROSBY MAIN	Baytown	
TX	HGLNTXXA	HIGHLANDS MAIN	Baytown	
TX	SANGTXXA	SAN ANGELO MAIN	San Angelo	
TX	SANGTXXB	SAN ANGELO SOUTHWEST	San Angelo	
TX	SANGTXXC	SAN ANGELO SOUTHEAST	San Angelo	
TX	SANGTXX2	LAKE NASWORTHY	San Angelo	

* Reference 20(C) for availability of service.

© 2022 Frontier Communications Parent, Inc. All rights reserved.

20. Optical Networking (Cont'd)

(L) Rates and Charges**

(1) Connect - CO Connect - DS0*

Jurisdiction	Monthly Rate	Two Year Monthly Rate	Three Year Monthly Rate	Five Year Monthly Rate
Florida	$12.00	$11.50	$11.00	$10.00

Connect - CO Connect – DS3*

Jurisdiction	Monthly Rate
California	$135.00
Florida	135.00

(2) Reserved for Future Use

(3) Reserved for Future Use

(4) Reserved for Future Use

(5) Reserved for Future Use

(6) Reserved for Future Use

(7) Reserved for Future Use

(8) Reserved for Future Use

* Grandfathered to exiting service effective December 26, 1998.

** These rates and charges apply to both Price Bands and N-MSA rates and charges.

© 2022 Frontier Communications Parent, Inc. All rights reserved.

20. Optical Networking (Cont'd)

(L) Rates and Charges** (Cont'd)

(9) Reserved for Future Use

(10) Reserved for Future Use

(11) Reserved for Future Use

(12) Reserved for Future Use

(13) Connect - Dual Route - OC3 Electrical*

Jurisdiction	Three Year Monthly Rate
California	$2,450.00

(14) Reserved for Future Use

(15) Reserved for Future Use

(16) Reserved for Future Use

(17) Connect - Dual Route - OC24 Electrical*

Jurisdiction	Three Year Monthly Rate
California	$6,900.00

* Grandfathered to exiting service effective December 26, 1998.

** These rates and charges apply to both Price Bands and N-MSA rates and charges.

© 2022 Frontier Communications Parent, Inc. All rights reserved.

20. Optical Networking (Cont'd)

(L) Rates and Charges** (Cont'd)

(18) Reserved for Future Use

(19) Reserved for Future Use

(20) Reserved for Future Use

(21) Reserved for Future Use

(22) Reserved for Future Use

(23) Reserved for Future Use

(24) Reserved for Future Use

(25) Reserved for Future Use

(26) Reserved for Future Use

(27) Reserved for Future Use

(28) Reserved for Future Use

** These rates and charges apply to both Price Bands and N-MSA rates and charges.

© 2022 Frontier Communications Parent, Inc. All rights reserved.

20. Optical Networking (Cont'd)

(L) Rates and Charges** (Cont'd)

(29) Express Connect # - First System - OC3

Jurisdiction	One Year Monthly Rate	Three Year Monthly Rate	Five Year Monthly Rate	Seven Year Monthly Rate
California	$7,800.00	$7,150.00	$6,500.00	$6,400.00
Florida	7,800.00	7,150.00	6,500.00	6,400.00
Texas	7,800.00	7,150.00	6,500.00	6,400.00

Express Connect # - Additional System - OC3

Jurisdiction	One Year Monthly Rate	Three Year Monthly Rate	Five Year Monthly Rate	Seven Year Monthly Rate
California	$1,100.00	$1,100.00	$1,100.00	$1,100.00
Florida	1,100.00	1,100.00	1,100.00	1,100.00
Texas	1,100.00	1,100.00	1,100.00	1,100.00

Service availability limited. Refer to # footnote on Page 20-5.

** These rates and charges apply to both Price Bands and N-MSA rates and charges.

© 2022 Frontier Communications Parent, Inc. All rights reserved.

20. Optical Networking (Cont'd)

(L) Rates and Charges** (Cont'd)

(30) Express Connect # - First System - OC12

Jurisdiction	One Year Monthly Rate	Three Year Monthly Rate	Five Year Monthly Rate	Seven Year Monthly Rate
California	$13,500.00	$12,100.00	$11,400.00	$11,300.00
Florida	13,500.00	12,100.00	11,400.00	11,300.00
Texas	13,500.00	11,300.00	10,700.00	10,600.00

Express Connect # - Additional System - OC12

Jurisdiction	One Year Monthly Rate	Three Year Monthly Rate	Five Year Monthly Rate	Seven Year Monthly Rate
California	$2,200.00	$2,100.00	$2,100.00	$2,100.00
Florida	2,200.00	2,100.00	2,100.00	2,100.00
Texas	2,200.00	2,100.00	2,100.00	2,100.00

Service availability limited. Refer to # footnote on Page 20-5.

** These rates and charges apply to both Price Bands and N-MSA rates and charges.

© 2022 Frontier Communications Parent, Inc. All rights reserved.

20. Optical Networking (Cont'd)

(L) Rates and Charges** (Cont'd)

(30) (Cont'd)

Express Connect # - First System - OC48

Jurisdiction	One Year Monthly Rate	Three Year Monthly Rate	Five Year Monthly Rate	Seven Year Monthly Rate
California	$27,625.00	$27,125.00	$26,750.00	$26,350.00
Florida	27,625.00	27,125.00	26,750.00	26,350.00
Texas	27,625.00	27,125.00	26,750.00	26,350.00

Express Connect # - Additional System - OC48

Jurisdiction	One Year Monthly Rate	Three Year Monthly Rate	Five Year Monthly Rate	Seven Year Monthly Rate
California	$9,135.00	$9,000.00	$9,000.00	$9,000.00
Florida	9,135.00	9,000.00	9,000.00	9,000.00
Texas	9,135.00	9,000.00	9,000.00	9,000.00

Service availability limited. Refer to # footnote on Page 20-5.

** These rates and charges apply to both Price Bands and N-MSA rates and charges.

© 2022 Frontier Communications Parent, Inc. All rights reserved.

20. Optical Networking (Cont'd)

(L) Rates and Charges** (Cont'd)

(31) Flex Express Connect # - First System - OC3

Jurisdiction	One Year Monthly Rate	Three Year Monthly Rate	Five Year Monthly Rate	Seven Year Monthly Rate
California	$12,050.00	$10,600.00	$10,000.00	$9,900.00
Florida	12,050.00	10,600.00	10,000.00	9,900.00
Texas	12,050.00	10,600.00	10,000.00	9,900.00

Flex Express Connect # - Additional System - OC3

Jurisdiction	One Year Monthly Rate	Three Year Monthly Rate	Five Year Monthly Rate	Seven Year Monthly Rate
California	$1,200.00	$1,200.00	$1,200.00	$1,200.00
Florida	1,200.00	1,200.00	1,200.00	1,200.00
Texas	1,200.00	1,200.00	1,200.00	1,200.00

Service availability limited. Refer to # footnote on Page 20-6.

** These rates and charges apply to both Price Bands and N-MSA rates and charges.

© 2022 Frontier Communications Parent, Inc. All rights reserved.

20. Optical Networking (Cont'd)

(L) Rates and Charges** (Cont'd)

(31) (Cont'd)

Express and Flex Express # - Additional CDL Node - OC3

Jurisdiction	Monthly Rate	One Year Monthly Rate	Three Year Monthly Rate	Five Year Monthly Rate	Seven Year Monthly Rate
California	$3,600.00	$3,300.00	$3,300.00	$3,300.00	$3,300.00
Florida	3,600.00	3,300.00	3,300.00	3,300.00	3,300.00
Texas	3,600.00	3,300.00	3,300.00	3,300.00	3,300.00

Express and Flex Express # - Additional CO Node - OC3

Jurisdiction	Monthly Rate	One Year Monthly Rate	Three Year Monthly Rate	Five Year Monthly Rate	Seven Year Monthly Rate
California	$2,500.00	$2,200.00	$2,200.00	$2,200.00	$2,200.00
Florida	2,500.00	2,200.00	2,200.00	2,200.00	2,200.00
Texas	2,500.00	2,200.00	2,200.00	2,200.00	2,200.00

Service availability limited. Refer to # footnotes on Pages 20-5 and 20-6.

** These rates and charges apply to both Price Bands and N-MSA rates and charges.

© 2022 Frontier Communications Parent, Inc. All rights reserved.

20. Optical Networking (Cont'd)

(L) Rates and Charges** (Cont'd)

(31) (Cont'd)

Flex Express # - First System Transport - OC3

Jurisdiction	Monthly Rate
California	$170.00
Florida	170.00
Texas	170.00

Flex Express # - Additional System Transport - OC3

Jurisdiction	Monthly Rate
California	$25.00
Florida	25.00
Texas	25.00

Service availability limited. Refer to # footnote on Page 20-6.

** These rates and charges apply to both Price Bands and N-MSA rates and charges.

© 2022 Frontier Communications Parent, Inc. All rights reserved.

FACILITIES FOR INTERSTATE ACCESS

20. Optical Networking (Cont'd)

(L) Rates and Charges** (Cont'd)

(32) Flex Express Connect # - First System - OC12

Jurisdiction	One Year Monthly Rate	Three Year Monthly Rate	Five Year Monthly Rate	Seven Year Monthly Rate
California	$19,700.00	$17,600.00	$16,700.00	$16,600.00
Florida	19,700.00	17,600.00	16,700.00	16,600.00
Texas	19,700.00	17,000.00	16,200.00	16,100.00

Flex Express Connect # - Additional System - OC12

Jurisdiction	One Year Monthly Rate	Three Year Monthly Rate	Five Year Monthly Rate	Seven Year Monthly Rate
California	$2,300.00	$2,300.00	$2,300.00	$2,300.00
Florida	2,300.00	2,300.00	2,300.00	2,300.00
Texas	2,300.00	2,300.00	2,300.00	2,300.00

Service availability limited. Refer to # footnote on Page 20-6.

** These rates and charges apply to both Price Bands and N-MSA rates and charges.

© 2022 Frontier Communications Parent, Inc. All rights reserved.

20. Optical Networking (Cont'd)

(L) Rates and Charges** (Cont'd)

(32) (Cont'd)

Express and Flex Express # - Additional CDL Node - OC12

Jurisdiction	Monthly Rate	One Year Monthly Rate	Three Year Monthly Rate	Five Year Monthly Rate	Seven Year Monthly Rate
California	$6,000.00	$5,900.00	$5,800.00	$5,450.00	$5,450.00
Florida	6,000.00	5,900.00	5,800.00	5,450.00	5,450.00
Texas	5,700.00	5,600.00	5,500.00	5,250.00	5,250.00

Express and Flex Express # - Additional CO Node - OC12

Jurisdiction	Monthly Rate	One Year Monthly Rate	Three Year Monthly Rate	Five Year Monthly Rate	Seven Year Monthly Rate
California	$3,500.00	$3,425.00	$3,350.00	$3,100.00	$3,100.00
Florida	3,500.00	3,425.00	3,350.00	3,100.00	3,100.00
Texas	3,500.00	3,425.00	3,350.00	3,100.00	3,100.00

Service availability limited. Refer to # footnotes on Pages 20-5 and 20-6.

** These rates and charges apply to both Price Bands and N-MSA rates and charges.

© 2022 Frontier Communications Parent, Inc. All rights reserved.

20. Optical Networking (Cont'd)

(L) Rates and Charges** (Cont'd)

(32) (Cont'd)

Flex Express # - First System Transport - OC12

Jurisdiction	Monthly Rate
California	$240.00
Florida	240.00
Texas	240.00

Flex Express # - Additional System Transport - OC12

Jurisdiction	Monthly Rate
California	$45.00
Florida	45.00
Texas	45.00

Service availability limited. Refer to # footnote on Page 20-6.

** These rates and charges apply to both Price Bands and N-MSA rates and charges.

© 2022 Frontier Communications Parent, Inc. All rights reserved.

FACILITIES FOR INTERSTATE ACCESS

20. Optical Networking (Cont'd)

(L) Rates and Charges** (Cont'd)

(32) (Cont'd)

Flex Express Connect # - First System - OC48

Jurisdiction	One Year Monthly Rate	Three Year Monthly Rate	Five Year Monthly Rate	Seven Year Monthly Rate
California	$33,425.00	$33,100.00	$32,700.00	$32,300.00
Florida	33,425.00	33,100.00	32,700.00	32,300.00
Texas	33,425.00	33,100.00	32,700.00	32,300.00

Flex Express Connect # - Additional System - OC48

Jurisdiction	One Year Monthly Rate	Three Year Monthly Rate	Five Year Monthly Rate	Seven Year Monthly Rate
California	$11,316.00	$11,316.00	$11,316.00	$11,316.00
Florida	11,316.00	11,316.00	11,316.00	11,316.00
Texas	11,316.00	11,316.00	11,316.00	11,316.00

Service availability limited. Refer to # footnote on Page 20-6.

** These rates and charges apply to both Price Bands and N-MSA rates and charges.

© 2022 Frontier Communications Parent, Inc. All rights reserved.

20. Optical Networking (Cont'd)

(L) Rates and Charges** (Cont'd)

(32) (Cont'd)

Express and Flex Express # - Additional CDL Node - OC48

Jurisdiction	Monthly Rate	One Year Monthly Rate	Three Year Monthly Rate	Five Year Monthly Rate	Seven Year Monthly Rate
California	$12,945.00	$11,945.00	$11,945.00	$11,945.00	$11,945.00
Florida	12,945.00	11,945.00	11,945.00	11,945.00	11,945.00
Texas	12,945.00	11,945.00	11,945.00	11,945.00	11,945.00

Express and Flex Express # - Additional CO Node - OC48

Jurisdiction	Monthly Rate	One Year Monthly Rate	Three Year Monthly Rate	Five Year Monthly Rate	Seven Year Monthly Rate
California	$9,130.00	$9,130.00	$9,130.00	$9,130.00	$9,130.00
Florida	9,130.00	9,130.00	9,130.00	9,130.00	9,130.00
Texas	9,130.00	9,130.00	9,130.00	9,130.00	9,130.00

Service availability limited. Refer to # footnotes on Pages 20-5 and 20-6.

** These rates and charges apply to both Price Bands and N-MSA rates and charges.

© 2022 Frontier Communications Parent, Inc. All rights reserved.

20. Optical Networking (Cont'd)

(L) Rates and Charges** (Cont'd)

(32) (Cont'd)

Flex Express # - First System Transport - OC48

Jurisdiction	Monthly Rate
California	$500.00
Florida	500.00
Texas	500.00

Flex Express # - Additional System Transport - OC48

Jurisdiction	Monthly Rate
California	$100.00
Florida	100.00
Texas	100.00

Service availability limited. Refer to # footnote on Page 20-6.

** These rates and charges apply to both Price Bands and N-MSA rates and charges.

© 2022 Frontier Communications Parent, Inc. All rights reserved.

20. Optical Networking (Cont'd)

(L) Rates and Charges** (Cont'd)

(33) Custom Connect - Rider - DS1

Jurisdiction	Monthly Rate
California	$75.00
Florida	75.00
Texas	75.00

** These rates and charges apply to both Price Bands and N-MSA rates and charges.

© 2022 Frontier Communications Parent, Inc. All rights reserved.

20. Optical Networking (Cont'd)

(L) Rates and Charges** (Cont'd)

(33) Custom Connect - Rider – DS3

Jurisdiction	Monthly Rate
California	$250.00
Florida	250.00
Texas	250.00

** These rates and charges apply to both Price Bands and N-MSA rates and charges.

© 2022 Frontier Communications Parent, Inc. All rights reserved.

20. Optical Networking (Cont'd)

(L) Rates and Charges** (Cont'd)

(34) Custom Connect – Shared Transport – DS1

Jurisdiction	Per Mile Monthly Rate
California	$12.00
Florida	12.00
Texas	12.00

Custom Connect – Shared Transport – DS3/STS1

Jurisdiction	Per Mile Monthly Rate
California	$23.00
Florida	74.83
Texas	56.70

Custom Connect – Shared Transport – OC3/OC3c

Jurisdiction	Per Mile Monthly Rate
California	$195.00
Florida	210.00
Texas	210.00

Custom Connect – Shared Transport – OC12/OC12c

Jurisdiction	Per Mile Monthly Rate
California	$420.00
Florida	450.00
Texas	450.00

Custom Connect – Shared Transport – OC48/OC48c

Jurisdiction	Per Mile Monthly Rate
California, Florida, Texas	$1125.00

** These rates and charges apply to both Price Bands and N-MSA rates and charges.

© 2022 Frontier Communications Parent, Inc. All rights reserved.

20. Optical Networking (Cont'd)

(L) Rates and Charges** (Cont'd)

(D)

(35) Reserved for Future Use

(36) Reserved for Future Use

(37) Reserved for Future Use

(38) Reserved for Future Use

(39) Reserved for Future Use

(40) Reserved for Future Use

(41) Reserved for Future Use

(42) Reserved for Future Use

(43) Reserved for Future Use

(44) Reserved for Future Use

(45) Reserved for Future Use

** These rates and charges apply to both Price Bands and N-MSA rates and charges.

© 2022 Frontier Communications Parent, Inc. All rights reserved.

20. Optical Networking (Cont'd)

(L) Rates and Charges** (Cont'd)

(46) Transport - LAN Wide OC3*

Jurisdiction	Three Year Monthly Rate
California	$2,800.00

(47) Reserved for Future Use

(48) Transport - LAN Wide OC24*

Jurisdiction	Three Year Monthly Rate
California	$16,500.00

(49) Reserved for Future Use

(50) Reserved for Future Use

* Grandfathered to exiting service effective December 26, 1998.

** These rates and charges apply to both Price Bands and N-MSA rates and charges.

© 2022 Frontier Communications Parent, Inc. All rights reserved.

20. Optical Networking (Cont'd)

(L) Rates and Charges** (Cont'd)

(51) Transport - LAN Wide Premium OC3*

Jurisdiction	Three Year Monthly Rate
California	$4,150.00

(52) Reserved for Future Use

(53) Transport - LAN Wide Premium OC24*

Jurisdiction	Three Year Monthly Rate
California	$24,700.00

(54) Reserved for Future Use

(55) Reserved for Future Use

* Grandfathered to exiting service effective December 26, 1998.

** These rates and charges apply to both Price Bands and N-MSA rates and charges.

© 2022 Frontier Communications Parent, Inc. All rights reserved.

20. Optical Networking (Cont'd)

(L) Rates and Charges** (Cont'd)

(56) Transport - Point to Point Per Mile - OC3*

Jurisdiction	Three Year Monthly Rate
California	$300.00

(57) Reserved for Future Use

(58) Transport - Point to Point Per Mile - OC24*

Jurisdiction	Three Year Monthly Rate
California	$670.00

(59) Reserved for Future Use

(60) Reserved for Future Use

(61) Reserved for Future Use

(62) Reserved for Future Use

(63) Reserved for Future Use

(64) Reserved for Future Use

* Grandfathered to exiting service effective December 26, 1998.

** These rates and charges apply to both Price Bands and N-MSA rates and charges.

© 2022 Frontier Communications Parent, Inc. All rights reserved.

20. Optical Networking (Cont'd)

(L) Rates and Charges** (Cont'd)

(65) Transport J-SONET*

Jurisdiction	LAN-Wide DS1 Monthly Rate
Florida	$41.07

Jurisdiction	LAN-Wide DS3 Monthly Rate
California	$1,150.00

* Grandfathered to exiting service effective December 26, 1998.

** These rates and charges apply to both Price Bands and N-MSA rates and charges.

© 2022 Frontier Communications Parent, Inc. All rights reserved.

20. Optical Networking (Cont'd)

(L) Rates and Charges** (Cont'd)

(66) Transport - Banded Optical - DS0 (Wholly Provided)

Jurisdiction	One Year Monthly Rate	Three Year Monthly Rate
California		
0 miles	$95.00	$88.00
1 - 10 miles	97.00	90.00
11 - 20 miles	99.00	92.00
21 + miles	101.00	94.00
Florida		
0 miles	$100.00	$93.00
1 - 10 miles	102.00	95.00
11 - 20 miles	104.00	97.00
21 + miles	106.00	99.00
Texas		
0 miles	$95.00	$91.00
1 - 10 miles	97.00	93.00
11 - 20 miles	99.00	95.00
21 + miles	101.00	97.00

** These rates and charges apply to both Price Bands and N-MSA rates and charges.

© 2022 Frontier Communications Parent, Inc. All rights reserved.

20. Optical Networking (Cont'd)

(L) Rates and Charges** (Cont'd)

(66) (Cont'd)

Transport - Banded Optical - DS0 (Wholly Provided)

Jurisdiction	Five Year Monthly Rate	Seven Year Monthly Rate
California		
0 miles	$85.00	$82.00
1 - 10 miles	87.00	84.00
11 - 20 miles	89.00	86.00
21 + miles	91.00	88.00
Florida		
0 miles	$90.00	$87.00
1 - 10 miles	92.00	89.00
11 - 20 miles	94.00	91.00
21 + miles	96.00	93.00
Texas		
0 miles	$86.00	$85.00
1 - 10 miles	87.00	86.00
11 - 20 miles	90.00	89.00
21 + miles	92.00	91.00

** These rates and charges apply to both Price Bands and N-MSA rates and charges.

© 2022 Frontier Communications Parent, Inc. All rights reserved.

20. Optical Networking (Cont'd)

(L) Rates and Charges** (Cont'd)

(66) (Cont'd)

Transport - Banded Optical - DS1 (Wholly Provided)

Jurisdiction	One Year Monthly Rate	Three Year Monthly Rate
California		
0 miles	$205.00	$191.00
1 - 10 miles	285.00	268.00
11 - 20 miles	305.00	273.00
21 + miles	350.00	307.00
Florida		
0 miles	$205.00	$191.00
1 - 10 miles	285.00	273.00
11 - 20 miles	320.00	304.00
21 + miles	350.00	319.00
Texas		
0 miles	$205.00	$181.00
1 - 10 miles	285.00	252.00
11 - 20 miles	305.00	278.00
21 + miles	350.00	302.00

** These rates and charges apply to both Price Bands and N-MSA rates and charges.

© 2022 Frontier Communications Parent, Inc. All rights reserved.

20. Optical Networking (Cont'd)

(L) Rates and Charges** (Cont'd)

(66) (Cont'd)

Transport - Banded Optical - DS1 (Wholly Provided)

Jurisdiction	Five Year Monthly Rate	Seven Year Monthly Rate
California		
0 miles	$175.00	$173.00
1 - 10 miles	245.00	240.00
11 - 20 miles	260.00	255.00
21 + miles	285.00	276.00
Florida		
0 miles	$185.00	$163.00
1 - 10 miles	265.00	235.00
11 - 20 miles	295.00	258.00
21 + miles	315.00	276.00
Texas		
0 miles	$175.00	$168.00
1 – 10 miles	245.00	235.00
11 - 20 miles	270.00	258.00
21 + miles	285.00	271.00

** These rates and charges apply to both Price Bands and N-MSA rates and charges.

© 2022 Frontier Communications Parent, Inc. All rights reserved.

20. Optical Networking (Cont'd)

(L) Rates and Charges** (Cont'd)

(66) (Cont'd)

Transport - Banded Optical - DS3 (Wholly Provided)

Jurisdiction	One Year Monthly Rate	Three Year Monthly Rate
California		
0 miles	$1,800.00	$1,600.00
1 - 10 miles	2,600.00	2,400.00
11 - 20 miles	4,000.00	3,600.00
21 + miles	5,200.00	4,600.00
Florida		
0 miles	$1,800.00	$1,700.00
1 - 10 miles	2,600.00	2,550.00
11 - 20 miles	4,000.00	3,800.00
21 + miles	5,200.00	4,900.00
Texas		
0 miles	$1,800.00	$1,700.00
1 - 10 miles	2,600.00	2,450.00
11 - 20 miles	4,000.00	3,700.00
21 + miles	5,200.00	4,800.00

** These rates and charges apply to both Price Bands and N-MSA rates and charges.

© 2022 Frontier Communications Parent, Inc. All rights reserved.

20. Optical Networking (Cont'd)

(L) Rates and Charges** (Cont'd)

(66) (Cont'd)

Transport - Banded Optical - DS3 (Wholly Provided)

Jurisdiction	Five Year Monthly Rate	Seven Year Monthly Rate
California		
0 miles	$1,380.00	$1,350.00
1 - 10 miles	2,000.00	1,950.00
11 - 20 miles	3,300.00	3,200.00
21 + miles	4,300.00	4,200.00
Florida		
0 miles	$1,600.00	$1,500.00
1 – 10 miles	2,350.00	2,200.00
11 - 20 miles	3,500.00	3,200.00
21 + miles	4,600.00	4,300.00
Texas		
0 miles	$1,600.00	$1,500.00
1 - 10 miles	2,300.00	2,200.00
11 - 20 miles	3,400.00	3,200.00
21 + miles	4,500.00	4,200.00

** These rates and charges apply to both Price Bands and N-MSA rates and charges.

© 2022 Frontier Communications Parent, Inc. All rights reserved.

20. Optical Networking (Cont'd)

(L) Rates and Charges** (Cont'd)

(66) (Cont'd)

Transport - Banded Optical - STS1 (Wholly Provided)

Jurisdiction	One Year Monthly Rate	Three Year Monthly Rate
California		
0 miles	$1,800.00	$1,600.00
1 - 10 miles	2,600.00	2,400.00
11 - 20 miles	4,000.00	3,600.00
21 + miles	5,200.00	4,600.00
Florida		
0 miles	$1,800.00	$1,700.00
1 - 10 miles	2,600.00	2,550.00
11 - 20 miles	4,000.00	3,800.00
21 + miles	5,200.00	4,900.00
Texas		
0 miles	$1,800.00	$1,700.00
1 - 10 miles	2,600.00	2,450.00
11 - 20 miles	4,000.00	3,700.00
21 + miles	5,200.00	4,800.00

** These rates and charges apply to both Price Bands and N-MSA rates and charges.

© 2022 Frontier Communications Parent, Inc. All rights reserved.

20. Optical Networking (Cont'd)

(L) Rates and Charges** (Cont'd)

(66) (Cont'd)

Transport - Banded Optical - STS1 (Wholly Provided)

Jurisdiction	Five Year Monthly Rate	Seven Year Monthly Rate
California		
0 miles	$1,380.00	$1,350.00
1 - 10 miles	2,000.00	1,950.00
11 - 20 miles	3,300.00	3,200.00
21 + miles	4,300.00	4,200.00
Florida		
0 miles	$1,600.00	$1,500.00
1 – 10 miles	2,350.00	2,200.00
11 - 20 miles	3,500.00	3,200.00
21 + miles	4,600.00	4,300.00
Texas		
0 miles	$1,600.00	$1,500.00
1 - 10 miles	2,300.00	2,200.00
11 - 20 miles	3,400.00	3,200.00
21 + miles	4,500.00	4,200.00

** These rates and charges apply to both Price Bands and N-MSA rates and charges.

© 2022 Frontier Communications Parent, Inc. All rights reserved.

20. Optical Networking (Cont'd)

(L) Rates and Charges** (Cont'd)

(67) Transport - Banded Optical - DS0 (Jointly Provided)

Jurisdiction	One Year Monthly Rate	Three Year Monthly Rate
California		
1 - 10 miles	$10.30	$9.30
11 - 20 miles	12.00	11.00
21 + miles	15.50	14.50
Florida		
1 - 10 miles	$9.80	$8.80
11 - 20 miles	11.50	10.50
21 + miles	15.00	14.00
Texas		
1 - 10 miles	9.50	$8.50
11 - 20 miles	11.25	10.25
21 + miles	14.25	13.25

** These rates and charges apply to both Price Bands and N-MSA rates and charges.

© 2022 Frontier Communications Parent, Inc. All rights reserved.

20. Optical Networking (Cont'd)

(L) Rates and Charges** (Cont'd)

(67) (Cont'd)

Transport - Banded Optical - DS0 (Jointly Provided)

Jurisdiction	Five Year Monthly Rate	Seven Year Monthly Rate
California		
1 - 10 miles	$9.00	$8.75
11 - 20 miles	10.50	10.00
21 + miles	14.00	13.50
Florida		
1 - 10 miles	$8.50	$8.25
11 - 20 miles	10.00	9.50
21 + miles	13.50	13.00
Texas		
1 - 10 miles	$8.25	$8.00
11 - 20 miles	10.00	9.75
21 + miles	12.75	12.50

** These rates and charges apply to both Price Bands and N-MSA rates and charges.

© 2022 Frontier Communications Parent, Inc. All rights reserved.

20. Optical Networking (Cont'd)

(L) Rates and Charges** (Cont'd)

(67) (Cont'd)

Transport - Banded Optical - DS1 (Jointly Provided)

Jurisdiction	One Year Monthly Rate	Three Year Monthly Rate
California		
1 - 10 miles	$78.00	$72.30
11 - 20 miles)	115.00	107.00
21 + miles	150.00	12.50
Florida		
1 - 10 miles	78.00	$72.00
11 - 20 miles	115.00	107.00
21 + miles	150.00	143.00
Texas		
1 - 10 miles	78.00	$72.00
11 - 20 miles	115.00	105.00
21 + miles	150.00	143.00

** These rates and charges apply to both Price Bands and N-MSA rates and charges.

© 2022 Frontier Communications Parent, Inc. All rights reserved.

20. Optical Networking (Cont'd)

(L) Rates and Charges** (Cont'd)

(67) (Cont'd)

Transport - Banded Optical - DS1 (Jointly Provided)

Jurisdiction	Five Year Monthly Rate	Seven Year Monthly Rate
California		
1 - 10 miles	$68.00	$64.00
11 - 20 miles	101.00	94.00
21 + miles	135.00	126.00
Florida		
1 - 10 miles	$68.00	$64.00
11 - 20 miles	101.00	94.00
21 + miles	135.00	126.00
Texas		
1 - 10 miles	$68.00	$64.00
11 - 20 miles	101.00	94.00
21 + miles	135.00	126.00

** These rates and charges apply to both Price Bands and N-MSA rates and charges.

© 2022 Frontier Communications Parent, Inc. All rights reserved.

20. Optical Networking (Cont'd)

(L) Rates and Charges** (Cont'd)

(67) (Cont'd)

Transport - Banded Optical - DS3 (Jointly Provided)

Jurisdiction	One Year Monthly Rate	Three Year Monthly Rate
California		
1 - 10 miles	$775.00	$700.00
11 - 20 miles	2,200.00	2,000.00
21 + miles	3,700.00	3,300.00
Florida		
1 - 10 miles	$775.00	$725.00
11 - 20 miles	2,200.00	2,125.00
21 + miles	3,700.00	3,500.00
Texas		
1 - 10 miles	$775.00	$700.00
11 - 20 miles	2,200.00	2,025.00
21 + miles	3,700.00	3,400.00

** These rates and charges apply to both Price Bands and N-MSA rates and charges.

© 2022 Frontier Communications Parent, Inc. All rights reserved.

20. Optical Networking (Cont'd)

(L) Rates and Charges** (Cont'd)

(67) (Cont'd)

Transport - Banded Optical - DS3 (Jointly Provided)

Jurisdiction	Five Year Monthly Rate	Seven Year Monthly Rate
California		
1 - 10 miles	$650.00	$600.00
11 - 20 miles)	1,920.00	1,820.00
21 + miles	3,100.00	3,000.00
Florida		
1 – 10 miles	$675.00	$625.00
11 - 20 miles)	2,020.00	1,915.00
21 + miles	3,200.00	3,000.00
Texas		
1 - 10 miles	$650.00	$600.00
11 - 20 miles)	1,920.00	1,815.00
21 + miles	3,100.00	2,900.00

** These rates and charges apply to both Price Bands and N-MSA rates and charges.

© 2022 Frontier Communications Parent, Inc. All rights reserved.

20. Optical Networking (Cont'd)

(L) Rates and Charges** (Cont'd)

(68) Reserved for Future Use

(69) Reserved for Future Use

(70) Reserved for Future Use

(71) Payload – Single CO DS3 - Electrical*

Jurisdiction	Monthly Rate
California	$160.00
Florida	160.00

* Grandfathered to existing service effective December 26, 1998.

** These rates and charges apply to both Price Bands and N-MSA rates and charges.

© 2022 Frontier Communications Parent, Inc. All rights reserved.

20. Optical Networking (Cont'd)

20.1 Reserved for Future Use

20.2 Reserved for Future Use

20.3 Reserved for Future Use

© 2022 Frontier Communications Parent, Inc. All rights reserved.

20. Optical Networking (Cont'd)

20.4 Dedicated SONET Entrance Facilities

(A) General

Dedicated SONET Entrance Facilities (DSEF) provides high capacity DS3s with enhanced survivability between a Customer Designated Location (CDL) and the Serving Wire Center (SWC) of that CDL. DSEF is provisioned over the Telephone Company's shared SONET network that includes a self-healing ring that passes through the CDL, the SWC of that CDL, and another wire center as determined by the Telephone Company.

(B) DSEF Components

(1) DSEF consists of two basic service components:

- DSEF Terminations
- DSEF Interfaces

(a) DSEF Terminations

DSEF Terminations provide STS1 bandwidth between the CDL and the SWC of that CDL. The DSEF Terminations carry DS3 services and are delivered with enhanced survivability over the Telephone Company's self-healing SONET network. As a result, the Customer is assured continuity of communication for the DS3 service even if there is a fiber facility failure between the CDL and the SWC of that CDL.

(b) DSEF Interfaces

The DSEF Interface defines the engineering characteristics of the service hand-off at the CDL. The Customer must specify an electrical or optical interface for each DSEF Termination.

(i) Electrical Interface

The electrical DSEF Interface defines the type of service that is to be provided over the Telephone Company provided SONET network. The electrical interface type that is available is DS3 (44.736 Mbps).

The electrical DSEF Interface is used for connecting a DS3 service to a DSEF Termination at the CDL.

© 2022 Frontier Communications Parent, Inc. All rights reserved.

20. Optical Networking (Cont'd)

20.4 Dedicated SONET Entrance Facilities (Cont'd)

(B) DSEF Components (Cont'd)

(1) (Cont'd)

(b) DSEF Interfaces (Cont'd)

(ii) Optical Interface

The optical DSEF Interface defines the optical handoff at the CDL. The optical interface is used for DS3 services connecting to DSEF Terminations and being mapped to an optical interface at OC3, OC12, or OC48 bandwidth. For example, Customer has the option of connecting multiple DS3 services to DSEF Terminations and mapping multiple DS3 services to a single OC3 optical interface.

(2) A network diagram of an DSEF with DS3 electrical interface and OC3 and OC12 optical interfaces is illustrated below:

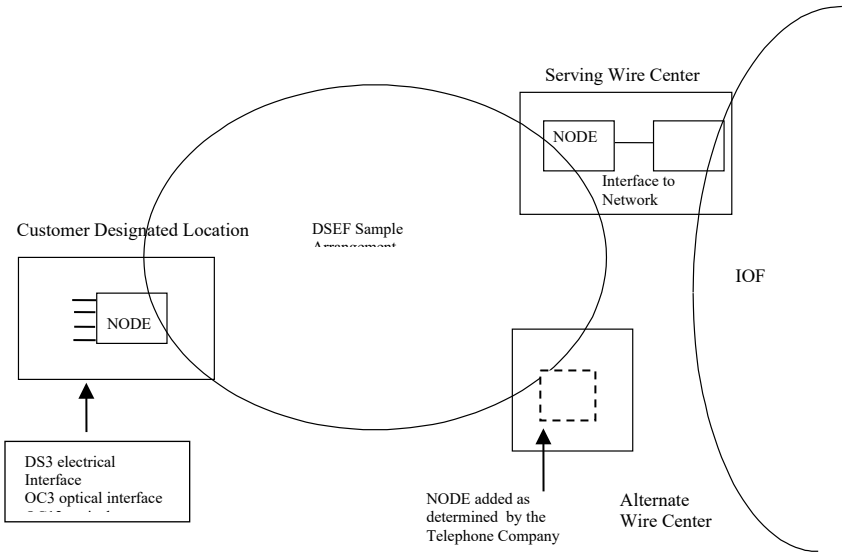

© 2022 Frontier Communications Parent, Inc. All rights reserved.

20. Optical Networking (Cont'd)

20.4 Dedicated SONET Entrance Facilities (Cont'd)

(B) DSEF Components (Cont'd)

(2) A network diagram of an DSEF with an OC48 optical interfaces is illustrated below:

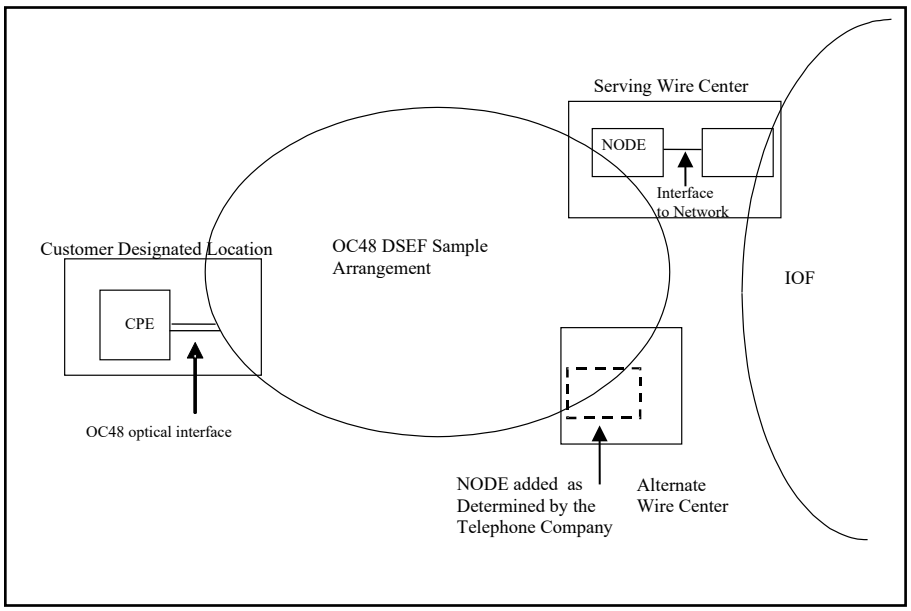

(C) Technical Specifications

Technical specifications for DSEF are set forth in Technical Reference GR-253-CORE, Issue 4.

© 2022 Frontier Communications Parent, Inc. All rights reserved.

20. Optical Networking (Cont'd)

20.4 Dedicated SONET Entrance Facilities (Cont'd)

(D) Terms and Conditions

(1) Deployment and Availability

(a) DSEF is provided where SONET facilities and bandwidth are available to provide the requested DSEF Interface. The Telephone Company will work cooperatively with the Customer in determining the availability of such facilities and if service can be provided.

(b) DSEF is available based on negotiated intervals, as described in Section 3.2.1 preceding.

(c) Regulations for moves or rearrangements of DS3s are described in Sections 5.6.4 and 5.6.1 preceding, respectively.

(2) Service Limitations

If the CDL is located in the same building as the SWC, the diversity between the SWC and the CDL may be limited by the physical paths available to connect the SWC and the CDL, and there may not be fiber diversity routed through an alternate wire center.

(3) Connection to Other Services

(a) Connection of DS3 Services to DSEF Terminations is provided by the Telephone Company. Interoffice mileage, when applicable, will apply at Special Transport rates, as set forth in Section 5.7.14 preceding, for the appropriate DS3 service being transported over the interoffice facilities

Asynchronous multiplexing of DS1s into a DS3 occurs outside the DSEF and all terms and rates as set forth in Section 5.7 preceding are applicable for such multiplexing.

(b) DSEF may also be connected to the following Telephone Company provided services, where such connections are technically and operationally feasible, as determined by the Telephone Company.

- ethernet private line service
- point-to-point SONET service

© 2022 Frontier Communications Parent, Inc. All rights reserved.

20. Optical Networking (Cont'd)

20.4 Dedicated SONET Entrance Facilities (Cont'd)

(D) Terms and Conditions (Cont'd)

(4) Space and Power

The Customer will be billed additional charges for any charges levied on the Telephone Company for space and power required to place equipment on the Telephone Company's side of the network interface.

(5) Conversions

Customers who wish to convert existing DS1 and lower bandwidth special access services to a DSEF may do so without termination liability as long as the total capacity of converted services at the CDL does not decrease. A new commitment period commences with the conversion and no credit is given for time-in-service on the new term plan. Applicable nonrecurring charges for installations will apply.

(E) Application of Rates and Charges

(1) Rate Structure

(a) DSEF Terminations

Monthly recurring charges (MRCs) apply for DSEF Terminations. The MRCs are differentiated by the term plan and DSEF Interface selected by the Customer. Nonrecurring charges apply for installations of DSEF Terminations.

Additionally, the MRCs for DSEF Terminations apply on a tapered schedule basis as set forth in (F) following. The rate to be billed for each DSEF Termination is based on the total number of DSEF Terminations that are in-service as of each billing date, on a per CDL basis, and per Billing Account Number (BAN) basis. To determine the total number of DSEF Terminations, the Telephone Company will count all DSEF Terminations and Telephone Company provided SONET entrance facilities provided in connection with a Telephone Company provided point-to-point SONET service or ethernet private line service that terminate at such CDL that are in service and billed under the same BAN.

For example, a Customer purchases five (5) DSEFs that are in-service at three (3) different CDLs, with the 5 DSEFs being billed under two (2) different BANs.

© 2022 Frontier Communications Parent, Inc. All rights reserved.

20. Optical Networking (Cont'd)

20.4 Dedicated SONET Entrance Facilities (Cont'd)

(E) Application of Rates and Charges (Cont'd)

(1) Rate Structure (Cont'd)

(a) DSEF Terminations (Cont'd)

(i) The first CDL has two (2) DSEFs, one with fifteen (15) in-service STS1 DSEF Terminations and the other with 5 in-service STS1 DSEF Terminations for a total of twenty (20) STS1 DSEF Terminations. Both DSEFs are under the same BAN. The rate to be billed for each DSEF Termination in the 2 DSEFs at the first CDL is the rate shown for 20 STS1 DSEF Terminations, as set forth in (F) following.

(ii) The second CDL has two (2) DSEFs, one with twenty (20) in-service STS1 DSEF Terminations and the other with twenty-two (22) in-service STS1 DSEF Terminations, for a total of forty-two (42) STS1 DSEF Terminations. The DSEFs at the second CDL are under separate BANs. The rate to be billed for each DSEF Termination in the first DSEF is the rate shown for 20 STS1 DSEF Terminations. The rate to be billed for each DSEF Termination in the second DSEF is the rate shown for 22 STS1 DSEF Terminations, as set forth in (F) following.

(iii) The third CDL has one (1) DSEF with nine (9) in-service STS1 DSEF Terminations on the same BAN. The rate to be billed for each DSEF Termination on the DSEF is the rate shown for 9 STS1 DSEF Terminations, as set forth in (F) following.

(b) DSEF Interfaces

MRCs for electrical DSEF Interfaces shall apply as set forth in (F)(2) following. When a customer orders an DSEF with a STS1 termination and an electrical interface, both the MRC for electrical DSEF interface (as set forth in (F)(2) following), and the MRC for STS1 Termination (as set forth in (F)(1) following) shall apply. The MRCs are differentiated by the term plan selected by the Customer. Nonrecurring charges apply for installations of electrical DSEF Interfaces, as set forth in (F)(3) following

© 2022 Frontier Communications Parent, Inc. All rights reserved.

20. Optical Networking (Cont'd)

20.4 Dedicated SONET Entrance Facilities (Cont'd)

(E) Application of Rates and Charges (Cont'd)

(2) Term Plans

DSEF is available for term plans of three (3) year and five (5) year commitment periods.

DSEF Services may be included in, and concurrently subscribed to, under the National Discount Plan as set forth in Section 23.1 following.

(3) Connection to Other Services

When a Customer connects a DSEF Termination to a DS3 service under a one (1) year commitment period, the DSEF Termination and Interface will be provided under a three (3) year commitment period.

When a Customer connects a DSEF Termination to a DS3 service under a three (3) year or five (5) year commitment period, the DSEF Termination and Interface will be provided under the same length commitment period.

When a Customer connects a DSEF Termination to a DS3 service under a seven (7) year commitment period, the DSEF Termination and Interface will be provided under a five (5) year commitment period.

(4) Expiration of Commitment Period

Upon expiration of the term plan, the Telephone Company will continue to provide DSEF on a month-to-month basis under the same rates, terms and conditions of the current term plan until the earliest to occur of: (a) the Customer cancels service or (b) a valid order for a new term plan is requested by the Customer.

© 2022 Frontier Communications Parent, Inc. All rights reserved.

20. Optical Networking (Cont'd)

20.4 Dedicated SONET Entrance Facilities (Cont'd)

(E) Application of Rates and Charges (Cont'd)

(5) Termination Liability

(a) A Customer must fulfill the term plan for each DSEF Termination and Interface, or be subject to termination liability for each DSEF Termination and Interface that was not in service for the entire commitment period. If a Customer disconnects service during the first year, termination liability will be calculated at one hundred percent (100%) of the MRCs for the unexpired portion of the first year, and at fifteen percent (15%) for the remainder of the term. If the disconnection takes place after the first year, termination liability is calculated at 15% of the MRCs for the remainder of the term.

(b) Termination liability will not apply to DSEF when:

(i) Reserved For Future Use. (C)

(ii) a Customer changes its term plan to a longer commitment period and the CDL does not change.

© 2022 Frontier Communications Parent, Inc. All rights reserved.

20. Optical Networking (Cont'd)

20.4 Dedicated SONET Entrance Facilities (Cont'd)

(F) Rates and Charges

(1) DSEF Terminations

(Jurisdiction: California, Florida, and Texas)

(a) Per STS1/51.84 Mbps DSEF Termination
With a DS3 Electrical Interface
Per **Price Cap/N-MSA**

	Monthly Rate 3 Year Term	Monthly Rate 5 Year Term	
Special Switched			(D)
1	$2,150.00	$1,800.00	
2	2,100.00	1,600.00	
3	1,700.00	1,500.00	
4	1,175.00	1,100.00	
5	1,000.00	890.00	
6	783.00	750.00	
7	699.00	640.00	
8	636.00	560.00	
9	588.00	500.00	
10	548.00	440.00	
11	516.00	395.00	
12	489.00	365.00	
13	480.00	362.00	
14	477.00	358.00	
15	475.00	355.00	
16	472.00	353.00	
17	470.00	350.00	
18	467.00	348.00	
19	465.00	345.00	
20	462.00	340.00	
21	459.00	338.00	
22	456.00	336.00	
23	454.00	333.00	
24	451.00	331.00	

(D)
(D)
(D)

© 2022 Frontier Communications Parent, Inc. All rights reserved.

20. Optical Networking (Cont'd)

20.4 Dedicated SONET Entrance Facilities (Cont'd)

(F) Rates and Charges (Cont'd)

(1) DSEF Terminations (Cont'd)

(Jurisdiction: California, Florida, and Texas)

(a) Per STS1/51.84 Mbps DSEF Termination
With a DS3 Electrical Interface (Cont'd)
Per **Price Cap/N-MSA**

	Monthly Rate 3 Year Term	Monthly Rate 5 Year Term	
Special Switched			(D)
25	$449.00	$329.00	
26	446.00	327.00	
27	444.00	325.00	
28	441.00	323.00	
29	438.00	321.00	
30	435.00	319.00	
31	433.00	317.00	
32	430.00	315.00	
33	428.00	312.00	
34	425.00	310.00	
35	423.00	308.00	
36	420.00	306.00	
37	407.00	304.00	
38	404.00	302.00	
39	402.00	298.00	
40	399.00	294.00	
41	396.00	288.00	(D)
42	393.00	283.00	(D)
43	391.00	278.00	(D)
44	388.00	273.00	
45	386.00	267.00	
46	383.00	262.00	
47	381.00	257.00	
48 and up	378.00	252.00	

© 2022 Frontier Communications Parent, Inc. All rights reserved.

20. Optical Networking (Cont'd)

20.4 Dedicated SONET Entrance Facilities (Cont'd)

(F) Rates and Charges (Cont'd)

(1) DSEF Terminations (Cont'd)

(Jurisdiction: California, Florida, and Texas)

(a) Per STS1/51.84 Mbps DSEF Termination
With a DS3 Electrical Interface (Cont'd)
Per **Price Band A, Price Band B, and Price Band C**

	Monthly Rate 3 Year Term	Monthly Rate 5 Year Term	
Special Switched			(D)
1	$2,150.00	$1,800.00	
2	2,100.00	1,600.00	
3	1,700.00	1,500.00	
4	1,175.00	1,100.00	
5	1,000.00	890.00	
6	783.00	750.00	
7	699.00	640.00	
8	636.00	560.00	
9	588.00	500.00	
10	548.00	440.00	
11	516.00	395.00	
12	489.00	365.00	
13	480.00	362.00	
14	477.00	358.00	
15	475.00	355.00	
16	472.00	353.00	
17	470.00	350.00	
18	467.00	348.00	
19	465.00	345.00	
20	462.00	340.00	
21	459.00	338.00	
22	456.00	336.00	
23	454.00	333.00	
24	451.00	331.00	

(D)
(D)
(D)

© 2022 Frontier Communications Parent, Inc. All rights reserved.

20. Optical Networking (Cont'd)

20.4 Dedicated SONET Entrance Facilities (Cont'd)

(F) Rates and Charges (Cont'd)

(1) DSEF Terminations (Cont'd)

(Jurisdiction: California, Florida, and Texas)

(a) Per STS1/51.84 Mbps DSEF Termination
With a DS3 Electrical Interface (Cont'd)
Per **Price Band A, Price Band B, and Price Band C**

	Monthly Rate 3 Year Term	Monthly Rate 5 Year Term	
Special Switched			(D)
25	$449.00	$329.00	
26	446.00	327.00	
27	444.00	325.00	
28	441.00	323.00	
29	438.00	321.00	
30	435.00	319.00	
31	433.00	317.00	
32	430.00	315.00	
33	428.00	312.00	
34	425.00	310.00	
35	423.00	308.00	
36	420.00	306.00	
37	407.00	304.00	
38	404.00	302.00	
39	402.00	298.00	
40	399.00	294.00	
41	396.00	288.00	
42	393.00	283.00	
43	391.00	278.00	
44	388.00	273.00	
45	386.00	267.00	
46	383.00	262.00	
47	381.00	257.00	
48 and up	378.00	252.00	

(D)
(D)
(D)

© 2022 Frontier Communications Parent, Inc. All rights reserved.

20. Optical Networking (Cont'd)

20.4 Dedicated SONET Entrance Facilities (Cont'd)

(F) Rates and Charges (Cont'd)

(1) DSEF Terminations (Cont'd)

(Jurisdiction: California, Florida, and Texas)

(b) Per STS1/51.84 Mbps DSEF Termination
With an OC3 Optical Interface
Per **Price Cap/N-MSA**

	Monthly Rate 3 Year Term	Monthly Rate 5 Year Term	
Special Switched			(D)
1	$2,310.00	$1,905.00	
2	2,260.00	1,705.00	
3	1,860.00	1,605.00	
4	1,335.00	1,205.00	
5	1,175.00	855.00	
6	971.00	690.00	
7	891.00	633.00	
8	831.00	590.00	
9	785.00	557.00	
10	747.00	530.00	
11	717.00	508.00	
12	691.00	490.00	
13	683.00	488.00	
14	680.00	486.00	
15	678.00	484.00	
16	675.00	482.00	
17	673.00	480.00	
18	670.00	478.00	
19	668.00	476.00	
20	665.00	474.00	
21	663.00	472.00	
22	660.00	470.00	
23	658.00	468.00	
24	655.00	466.00	

(D)
(D)
(D)

© 2022 Frontier Communications Parent, Inc. All rights reserved.

20. Optical Networking (Cont'd)

20.4 Dedicated SONET Entrance Facilities (Cont'd)

(F) Rates and Charges (Cont'd)

(1) DSEF Terminations (Cont'd)

(Jurisdiction: California, Florida, and Texas)

(b) Per STS1/51.84 Mbps DSEF Termination
With an OC3 Optical Interface (Cont'd)
Per **Price Cap/N-MSA**

	Monthly Rate 3 Year Term	Monthly Rate 5 Year Term	
Special Switched			(D)
25	$653.00	$464.00	
26	650.00	462.00	
27	648.00	460.00	
28	645.00	458.00	
29	643.00	456.00	
30	640.00	454.00	
31	638.00	452.00	
32	635.00	450.00	
33	633.00	448.00	
34	630.00	446.00	
35	628.00	444.00	
36	625.00	442.00	
37	613.00	440.00	
38	610.00	438.00	
39	608.00	434.00	
40	605.00	430.00	
41	603.00	425.00	
42	600.00	420.00	
43	598.00	415.00	
44	595.00	410.00	
45	593.00	405.00	
46	590.00	400.00	
47	588.00	395.00	
48 and up	585.00	390.00	

(D)
(D)
(D)

© 2022 Frontier Communications Parent, Inc. All rights reserved.

20. Optical Networking (Cont'd)

20.4 Dedicated SONET Entrance Facilities (Cont'd)

(F) Rates and Charges (Cont'd)

(1) DSEF Terminations (Cont'd)

(Jurisdiction: California, Florida, and Texas)

(b) Per STS1/51.84 Mbps DSEF Termination
With an OC3 Optical Interface (Cont'd)
Per **Price Band A, Price Band B, and Price Band C**

	Monthly Rate 3 Year Term	Monthly Rate 5 Year Term	
Special Switched			(D)
1	$2,310.00	$1,905.00	
2	2,260.00	1,705.00	
3	1,860.00	1,605.00	
4	1,335.00	1,205.00	
5	1,175.00	855.00	
6	971.00	690.00	
7	891.00	633.00	
8	831.00	590.00	
9	785.00	557.00	
10	747.00	530.00	
11	717.00	508.00	
12	691.00	490.00	
13	683.00	488.00	
14	680.00	486.00	
15	678.00	484.00	
16	675.00	482.00	
17	673.00	480.00	
18	670.00	478.00	
19	668.00	476.00	
20	665.00	474.00	
21	663.00	472.00	
22	660.00	470.00	
23	658.00	468.00	
24	655.00	466.00	

(D)
(D)
(D)

© 2022 Frontier Communications Parent, Inc. All rights reserved.

20. Optical Networking (Cont'd)

20.4 Dedicated SONET Entrance Facilities (Cont'd)

(F) Rates and Charges (Cont'd)

(1) DSEF Terminations (Cont'd)

(Jurisdiction: California, Florida, and Texas)

(b) Per STS1/51.84 Mbps DSEF Termination
With an OC3 Optical Interface (Cont'd)
Per **Price Band A, Price Band B, and Price Band C**

	Monthly Rate 3 Year Term	Monthly Rate 5 Year Term	
Special Switched			(D)
25	$653.00	$464.00	
26	650.00	462.00	
27	648.00	460.00	
28	645.00	458.00	
29	643.00	456.00	
30	640.00	454.00	
31	638.00	452.00	
32	635.00	450.00	
33	633.00	448.00	
34	630.00	446.00	
35	628.00	444.00	
36	625.00	442.00	
37	613.00	440.00	
38	610.00	438.00	
39	608.00	434.00	
40	605.00	430.00	
41	603.00	425.00	
42	600.00	420.00	
43	598.00	415.00	
44	595.00	410.00	
45	593.00	405.00	
46	590.00	400.00	
47	588.00	395.00	
48 and up	585.00	390.00	

(D)
(D)
(D)

© 2022 Frontier Communications Parent, Inc. All rights reserved.

20. Optical Networking (Cont'd)

20.4 Dedicated SONET Entrance Facilities (Cont'd)

(F) Rates and Charges (Cont'd)

(1) DSEF Terminations (Cont'd)

(Jurisdiction: California, Florida, and Texas)

(c) Per STS1/51.84 Mbps DSEF Termination
With an OC12 Optical Interface
Per **Price Cap/N-MSA**

	Monthly Rate 3 Year Term	Monthly Rate 5 Year Term	
Special Switched			(D)
1	$2,310.00	$1,905.00	
2	2,260.00	1,705.00	
3	1,860.00	1,605.00	
4	1,335.00	1,205.00	
5	1,175.00	970.00	
6	896.00	855.00	
7	816.00	745.00	
8	756.00	665.00	
9	710.00	605.00	
10	672.00	545.00	
11	642.00	500.00	
12	616.00	470.00	
13	608.00	465.00	
14	605.00	455.00	
15	603.00	450.00	
16	600.00	445.00	
17	598.00	440.00	
18	595.00	435.00	
19	593.00	430.00	
20	590.00	424.00	
21	588.00	422.00	
22	585.00	420.00	
23	583.00	418.00	
24	580.00	416.00	

(D)
(D)
(D)

© 2022 Frontier Communications Parent, Inc. All rights reserved.

20. Optical Networking (Cont'd)

20.4 Dedicated SONET Entrance Facilities (Cont'd)

(F) Rates and Charges (Cont'd)

(1) DSEF Terminations (Cont'd)

(Jurisdiction: California, Florida, and Texas)

(c) Per STS1/51.84 Mbps DSEF Termination
With an OC12 Optical Interface (Cont'd)
Per **Price Cap/N-MSA**

	Monthly Rate 3 Year Term	Monthly Rate 5 Year Term	
Special Switched			(D)
25	$578.00	$414.00	
26	575.00	412.00	
27	573.00	410.00	
28	570.00	408.00	
29	568.00	406.00	
30	565.00	404.00	
31	563.00	402.00	
32	560.00	400.00	
33	558.00	398.00	
34	555.00	396.00	
35	553.00	394.00	
36	550.00	392.00	
37	538.00	390.00	
38	535.00	388.00	
39	533.00	384.00	
40	530.00	380.00	
41	528.00	375.00	
42	525.00	370.00	
43	523.00	365.00	
44	520.00	360.00	
45	518.00	355.00	
46	515.00	350.00	
47	513.00	345.00	
48 and up	510.00	340.00	

(D)
(D)
(D)

© 2022 Frontier Communications Parent, Inc. All rights reserved.

20. Optical Networking (Cont'd)

20.4 Dedicated SONET Entrance Facilities (Cont'd)

(F) Rates and Charges (Cont'd)

(1) DSEF Terminations (Cont'd)

(Jurisdiction: California, Florida, and Texas)

(c) Per STS1/51.84 Mbps DSEF Termination
With an OC12 Optical Interface (Cont'd)
Per **Price Band A, Price Band B, and Price Band C**

	Monthly Rate 3 Year Term	Monthly Rate 5 Year Term	
Special Switched			(D)
1	$2,310.00	$1,905.00	
2	2,260.00	1,705.00	
3	1,860.00	1,605.00	
4	1,335.00	1,205.00	
5	1,175.00	970.00	
6	896.00	855.00	
7	816.00	745.00	
8	756.00	665.00	
9	710.00	605.00	
10	672.00	545.00	
11	642.00	500.00	
12	616.00	470.00	
13	608.00	465.00	
14	605.00	455.00	
15	603.00	450.00	
16	600.00	445.00	
17	598.00	440.00	
18	595.00	435.00	
19	593.00	430.00	
20	590.00	424.00	
21	588.00	422.00	
22	585.00	420.00	
23	583.00	418.00	
24	580.00	416.00	

(D)
(D)
(D)

© 2022 Frontier Communications Parent, Inc. All rights reserved.

20. Optical Networking (Cont'd)

20.4 Dedicated SONET Entrance Facilities (Cont'd)

(F) Rates and Charges (Cont'd)

(1) DSEF Terminations (Cont'd)

(Jurisdiction: California, Florida, and Texas)

(c) Per STS1/51.84 Mbps DSEF Termination
With an OC12 Optical Interface (Cont'd)
Per **Price Band A, Price Band B, and Price Band C**

	Monthly Rate 3 Year Term	Monthly Rate 5 Year Term	
Special Switched			(D)
25	$578.00	$414.00	
26	575.00	412.00	
27	573.00	410.00	
28	570.00	408.00	
29	568.00	406.00	
30	565.00	404.00	
31	563.00	402.00	
32	560.00	400.00	
33	558.00	398.00	
34	555.00	396.00	
35	553.00	394.00	
36	550.00	392.00	
37	538.00	390.00	
38	535.00	388.00	
39	533.00	384.00	
40	530.00	380.00	
41	528.00	375.00	
42	525.00	370.00	
43	523.00	365.00	
44	520.00	360.00	
45	518.00	355.00	
46	515.00	350.00	
47	513.00	345.00	
48 and up	510.00	340.00	

(D)
(D)
(D)

© 2022 Frontier Communications Parent, Inc. All rights reserved.

20. Optical Networking (Cont'd)

20.4 Dedicated SONET Entrance Facilities (Cont'd)

(F) Rates and Charges (Cont'd)

(1) DSEF Terminations (Cont'd)

(Jurisdiction: California, Florida, and Texas)

(d) Per STS1/51.84 Mbps DSEF Termination
With an OC48 Optical Interface
Per **Price Cap/N-MSA**

Special Switched	Monthly Rate 3 Year Term	Monthly Rate 5 Year Term	
1	$6,288.00	$4,488.00	(D)
2	3,144.00	2,244.00	
3	2,096.00	1,496.00	
4	1,572.00	1,122.00	
5	1,258.00	898.00	
6	1,048.00	748.00	
7	898.00	641.00	
8	786.00	561.00	
9	699.00	499.00	
10	629.00	449.00	
11	572.00	408.00	
12	524.00	343.33	
13	517.00	342.41	
14	515.00	340.58	
15	513.00	338.74	
16	510.00	337.82	
17	509.00	335.99	
18	506.00	334.15	
19	505.00	333.23	
20	502.00	331.40	
21	500.00	329.56	
22	498.00	327.73	
23	496.00	326.81	
24	493.00	324.97	

(D)
(D)
(D)

© 2022 Frontier Communications Parent, Inc. All rights reserved.

20. Optical Networking (Cont'd)

20.4 Dedicated SONET Entrance Facilities (Cont'd)

(F) Rates and Charges (Cont'd)

(1) DSEF Terminations (Cont'd)

(Jurisdiction: California, Florida, and Texas)

(d) Per STS1/51.84 Mbps DSEF Termination
With an OC48 Optical Interface (Cont'd)
Per **Price Cap/N-MSA**

	Monthly Rate 3 Year Term	Monthly Rate 5 Year Term	
Special Switched			(D)
25	$492.00	$323.14	
26	489.00	322.22	
27	488.00	320.38	
28	485.00	318.55	
29	483.00	317.63	
30	481.00	315.79	
31	479.00	313.96	
32	476.00	312.12	
33	475.00	311.20	
34	472.00	309.37	
35	471.00	307.53	
36	468.00	306.61	
37	458.00	304.78	
38	455.00	302.94	
39	454.00	300.19	
40	451.00	296.51	
41	449.00	292.84	
42	447.00	289.17	
43	445.00	285.50	
44	442.00	280.91	
45	441.00	277.24	
46	438.00	273.56	
47	437.00	269.89	
48 and up	434.00	265.30	

(D)
(D)
(D)

© 2022 Frontier Communications Parent, Inc. All rights reserved.

20. Optical Networking (Cont'd)

20.4 Dedicated SONET Entrance Facilities (Cont'd)

(F) Rates and Charges (Cont'd)

(1) DSEF Terminations (Cont'd)

(Jurisdiction: California, Florida, and Texas)

(d) Per STS1/51.84 Mbps DSEF Termination
With an OC48 Optical Interface (Cont'd)
Per **Price Band A, Price Band B, and Price Band C**

	Monthly Rate 3 Year Term	Monthly Rate 5 Year Term	
Special Switched			(D)
1	$6,288.00	$4,488.00	
2	3,144.00	2,244.00	
3	2,096.00	1,496.00	
4	1,572.00	1,122.00	
5	1,258.00	898.00	
6	1,048.00	748.00	
7	898.00	641.00	
8	786.00	561.00	
9	699.00	499.00	
10	629.00	449.00	
11	572.00	408.00	
12	524.00	343.33	
13	517.00	342.41	
14	515.00	340.58	
15	513.00	338.74	
16	510.00	337.82	(D)
17	509.00	335.99	(D)
18	506.00	334.15	(D)
19	505.00	333.23	
20	502.00	331.40	
21	500.00	329.56	
22	498.00	327.73	
23	496.00	326.81	
24	493.00	324.97	

© 2022 Frontier Communications Parent, Inc. All rights reserved.

20. Optical Networking (Cont'd)

20.4 Dedicated SONET Entrance Facilities (Cont'd)

(F) Rates and Charges (Cont'd)

(1) DSEF Terminations (Cont'd)

(Jurisdiction: California, Florida, and Texas)

(d) Per STS1/51.84 Mbps DSEF Termination
With an OC48 Optical Interface (Cont'd)
Per **Price Band A, Price Band B, and Price Band C**

	Monthly Rate 3 Year Term	Monthly Rate 5 Year Term	
Special Switched			(D)
25	$492.00	$323.14	
26	489.00	322.22	
27	488.00	320.38	
28	485.00	318.55	
29	483.00	317.63	
30	481.00	315.79	
31	479.00	313.96	
32	476.00	312.12	
33	475.00	311.20	
34	472.00	309.37	
35	471.00	307.53	
36	468.00	306.61	
37	458.00	304.78	
38	455.00	302.94	
39	454.00	300.19	
40	451.00	296.51	
41	449.00	292.84	
42	447.00	289.17	
43	445.00	285.50	
44	442.00	280.91	
45	441.00	277.24	
46	438.00	273.56	
47	437.00	269.89	
48 and up	434.00	265.30	

(D)
(D)
(D)

© 2022 Frontier Communications Parent, Inc. All rights reserved.

20. Optical Networking (Cont'd)

20.4 Dedicated SONET Entrance Facilities (Cont'd)

(F) Rates and Charges (Cont'd)

(2) Electrical DSEF Terminations

(a) DS3 Interface Monthly Recurring Charge

(Jurisdiction: California, Florida, and Texas)

	3-Year Term	
Price Cap/N-MSA	$157.00	(C)
Price Band A	157.00	
Price Band B	157.00	
Price Band C	157.00	

	5-Year Term	
Price Cap/N-MSA	$105.00	(C)
Price Band A	105.00	
Price Band B	105.00	
Price Band C	105.00	

© 2022 Frontier Communications Parent, Inc. All rights reserved.

20. Optical Networking (Cont'd)

20.4 Dedicated SONET Entrance Facilities (Cont'd)

(F) Rates and Charges (Cont'd)

(3) Installation Charges

(a) Per DSEF Termination

(Jurisdiction: California, Florida, and Texas)

	Nonrecurring Charge	
STS1 w/ separate Interface		
Price Cap/N-MSA	$1.00	(C)
Price Band A	1.00	
Price Band B	1.00	
Price Band C	1.00	

(b) Per electrical DSEF Interface

(Jurisdiction: California, Florida, and Texas)

	3-Year Term Nonrecurring Charge	
Per electrical DSEF Interface - DS3		
Price Cap/N-MSA	$1.00	(C)
Price Band A	1.00	
Price Band B	1.00	
Price Band C	1.00	

	5-Year Term Nonrecurring Charge	
Per electrical DSEF Interface - DS3		
Price Cap/N-MSA	$1.00	(C)
Price Band A	1.00	
Price Band B	1.00	
Price Band C	1.00	

© 2022 Frontier Communications Parent, Inc. All rights reserved.

FACILITIES FOR INTERSTATE ACCESS

20. Optical Networking

(A) General

This section contains the rules and regulations pertaining to the provisioning of SONET Access and Dense Wave Division Multiplexing (DWDM) Service. The regulations and rates specified herein are in addition to the applicable rates and regulations specified in other Sections of this Guide.

This service supports asynchronous bandwidth capacities at 1.5 Mbps and 45 Mbps in addition to synchronous Optical Carrier (OC) bandwidth capacities at OC-3, OC-3c, OC-12, OC-12c, OC-48, OC48c and OC192 bit rates and 1.25 Gbps or 2.5 Gbps wavelengths. The SONET add/drop multiplexer aggregates lesser bit speed services onto the dedicated SONET ring or the two-point SONET circuit configuration.

(B) Description

Optical Networking is comprised of high speed SONET based and/or DWDM technology providing connectivity at, and transport between, two or more customer designated locations (CDLs). Additionally, certain Optical Networking services provide interconnection between an EIS arrangement and a Telephone Company wire center associated with certain Optical Networking Service or advanced data service*.

* Advanced data services include Telephone Company provided frame relay services, switched multi-megabit services, Internet Protocol services, LAN Extension Services and ATM-cell relay services. Connections to advanced data services are provided by the Telephone Company where such connections are technically and operationally feasible, as determined by the Telephone Company.

© 2022 Frontier Communications Parent, Inc. All rights reserved.

20. Optical Networking (Cont'd)

(C) Conditions

Optical Networking services are provided where facilities are available with sufficient bandwidth capacity to meet the customer's request.

The customer is responsible for providing all facilities and cabling necessary to connect customer equipment to this interface or to interconnect with the Telephone Company or its services under an EIS arrangement.

The customer will be billed additional charges for any charges levied the Telephone Company for space and power required to place equipment on the company's side of the network interface.

Customer Facility Assignment (CFA) is controlled by the Telephone Company, on all access customer serving wire centers on the IOF and extends to the terminating CDL. Should the customer require control of the facility assignment and order multiplexing on the IOF, the services from the multiplexer to the end user serving wire center will be ordered from Section 5 of this Guide.

It is the customer's responsibility to ensure that the customer's equipment provides industry standard electrical signals compatible with Optical Networking transport transmission. Technical specifications are contained in the following publications:

GR-253-CORE, Issue 4
GR-1400-CORE, Issue 3
GR-1374-CORE, Issue 1
ANSI T1.105.01-2000 (R2005)
ANSI T1.102-1993 (R2005)

The Company will work cooperatively with the customer during a planning session to insure that the customer orders sufficient Ethernet Private Line bandwidth capacity to satisfy the customer's requirements as well as other applicable Ethernet Private Line services. This planning session must take place prior to an initial Ethernet Private Line ASR.

© 2022 Frontier Communications Parent, Inc. All rights reserved.

20. Optical Networking (Cont'd)

(D) Application of Rates and Charges

(1) CONNECT

The Connect rate element provides the platform for customer access to the Telephone Company's Optical Network where connection to certain Ethernet Private Line services or advanced data services occur. The Connect rate element provides the link between the CDL or EIS arrangement and the SWC of the CDL or EIS arrangement.

There are three types of Connects:

- Single Route Connect *
- Dual Route Connect *
- CO Connect *
- Express Connect#
- Flex Express Connect##
- Custom Connect### (N)

(a) Single Route Connect

The Single Route provides a connection to the Telephone Company's wire center(s) via a point-to-point route configuration. The Single Route Connect may be provided as electrical or optical interface in OC bandwidths of OC3, OC12, OC24 or OC48. The Single Route Connect may be ordered as switched or special access.

(b) Dual Route Connect

The Dual Route Connect provides a connection to the Telephone Company's wire center(s) in which the working transmission path traverses a distinct and separate path from the protection transmission path. The Dual Route Connect may be provided as electrical or optical interface in OC bandwidths of OC3, OC12, OC24 or OC48. The Dual Route Connect may be ordered as switched or special access.

(c) Reserved for Future Use

* Grandfathered to existing service effective December 26, 1998.
\# Service availability limited. See # footnote on Page 20-5.
\## Service availability limited. See # footnote on Page 20-6.
\### Grandfathered. See # footnote on Page 20-7.1 (N)

© 2022 Frontier Communications Parent, Inc. All rights reserved.

20. Optical Networking (Cont'd)

(D) Application of Rates and Charges (Cont'd)

(1) CONNECT (Cont'd)

(d) CO Connect

The CO Connect provides access to the Telephone Company's Ethernet Private Line platform. The CO Connect is provided at DS3, DS1 and DS0 levels. The appropriate special access line from Section 5 will apply.

When a CO Connect is provided at a DS3 or DS1 level, the customer may order multiplexing, as shown in Section 5, at the end user serving wire center. The customer will be charged for the multiplexing in addition to the CO Connect.

When a CO Connect is ordered at a DS0 level, the customer must request a minimum of a DS1 interface at the IC customer wire center and will be charged for the appropriate payload (i.e., DS1 or DS3) at the IC customer wire center. The CO connect may be ordered as switched or special access.

(e) Reserved for Future Use

(f) Reserved for Future Use

(g) Reserved for Future Use

© 2022 Frontier Communications Parent, Inc. All rights reserved.

20. Optical Networking (Cont'd)

(D) Application of Rates and Charges (Cont'd)

(1) CONNECT (Cont'd)

(h) Express Connect #

The Express Connect provides a connection to the Telephone Company's Ethernet Private Line wire center(s) via a ring topology consisting of three nodes, one of which must be a Telephone Company serving wire center. When two of the nodes are customer designated locations, both must be served by the same serving wire center and only one customer location can be without an Express Connect CDL Node. The Express Connect is provided at a bandwidth of OC3, OC12 or OC48 and may be ordered under a one (1) year, three (3) year, five (5) year or seven (7) year Term Payment Plan (TPP).

The Express Connect has three rate elements, a "First System" with optional "Additional System(s) and Additional Express Nodes." The customer may order up to three "Additional Systems" of OC3, OC12, or OC48 bandwidth not to exceed OC12, OC48 or OC192 bandwidth capacity respectively. Rider charges for Express Connect are included in its monthly rate.

The customer may subscribe to -Banded Optical Transport with Express Connect.

The customer may also subscribe to Telephone Company provided banded SONET transport with Express Connect, provided that such connections are technically and operationally feasible, as determined by the Telephone Company.

The Express Connect may be ordered as switched or special access.

Effective August 15, 2009, orders for new Express Connect First Systems, Additional CDL Nodes, and/or Additional CO Nodes are no longer permitted. The Telephone Company will continue to provide Express Connect pursuant to this Section 20 on any existing Express Connect that is in-service as of August 15, 2009, or any order for Express Connect that is placed with the Telephone Company prior to August 15, 2009, (collectively, Existing Express Connect). Changes in bandwidth capacity, moves, and/or rearrangements are not permitted.

© 2022 Frontier Communications Parent, Inc. All rights reserved.

20. Optical Networking (Cont'd)

(D) Application of Rates and Charges (Cont'd)

(1) CONNECT (Cont'd)

(i) Flex Express Connect #

The Flex Express Connect provides a connection to the Telephone Company's Ethernet Private Line wire center(s) via ring topology with a minimum of four nodes, two of which must be Telephone Company wire centers. When two or more of the nodes are customer designated locations, only one of those nodes may be without a Flex Express CDL Node. The Flex Express Connect is provided at a bandwidth of OC3, OC12 or OC48.

Flex Express Connect is comprised of four rate elements, a "First System" with optional "Additional System(s)", Additional Flex Nodes, and Flex Express Transport. The customer may order up to three "Additional System(s)" of OC3, OC12 or OC48 not to exceed OC12, OC48 or OC192 bandwidth capacity, respectively.

Flex Express Transport is applied to the entire circumference of the service and is measured from the serving wire center of the customer designated location(s) and the CO Nodes. Flex Express Transport is ordered with the "First System" and each "Additional System" Flex Express Connect in OC3, OC12 or OC48 bandwidth not to exceed OC12, OC48 or OC192 bandwidth capacity, respectively.

Effective August 15, 2009, orders for new Flex Express Connect First Systems, Additional CDL Nodes, and/or Additional CO Nodes are no longer permitted. The Telephone Company will continue to provide Flex Express Connect pursuant to this Section 20 on any existing Flex Express Connect that is in-service as of August 15, 2009, or any order for Flex Express Connect that is placed with the Telephone Company prior to August 15, 2009, (collectively, Existing Flex Express Connect). Changes in bandwidth capacity, moves, and/or rearrangements are not permitted.

© 2022 Frontier Communications Parent, Inc. All rights reserved.

20. Optical Networking (Cont'd)

(D) Application of Rates and Charges (Cont'd)

(1) CONNECT (Cont'd)

(i) Flex Express Connect # (Cont'd)

Flex Express may be ordered under a one (1) year, three (3) year or five (5) year or seven (7) year Term Payment Plan (TPP). After the initial order for Flex Express Connect, month-to-month rates shall apply for the additional Flex Nodes. When the TPP of the Flex Express "First System" expires and the customer does not renew the TPP as shown in 20(G)(2), the first Flex Express "Additional System" will assume the Flex Express "First System" rates.

The customer may subscribe to Banded Optical Transport with Flex Express Connect.

The customer may also subscribe to Telephone Company provided banded SONET transport with Flex Express Connect, provided that such connections are technically and operationally feasible, as determined by the Telephone Company.

Flex Express Connect may be ordered as switched or special access.

(j) Reserved for Future Use

Service availability limited. Refer to footnote on Page 20-6.

© 2022 Frontier Communications Parent, Inc. All rights reserved.

20. Optical Networking (Cont'd)

(D) Application of Rates and Charges (Cont'd)

(1) CONNECT (Cont'd)

(j) Custom Connect#

The Custom Connect provides a connection to the Telephone Company's Optical Network and an access customer's designated location (CDL) or EIS arrangement. The Custom Connect is typically comprised of CO Nodes, CDL Links or SONET Premises Nodes, Transport and Riders. Certain configurations involving connection to an advanced data service may not require all of these rate elements. Each Custom Connect must consist of a minimum of two customer designated locations or one customer designated location or EIS arrangement and a wire center where connection to an advanced data service occurs. At least one of the locations must be a CDL Link.

The Custom Connect may be ordered as switched or special access. The Concatenated/Non-concatenated Custom Connect CDL Link is provided with a two fiber network interface. Where technically feasible, the Concatenated/Non-concatenated CDL Link may be optionally ordered with four fiber, 1+1 protected network interface, as Single or Diverse Route.

Custom Connect Single Route and Diverse Route at OC12c and OC48c may also connect to an advanced data service at designated Telephone Company wire centers.

Custom Connect may also be connected to the following Telephone Company provided services, where such connections are technically and operationally feasible, as determined by the Telephone Company:

- dedicated SONET ring service
- point-to-point SONET service
- optical hubbing service
- DWDM ring service
- SONET entrance facility service
- ethernet private line service

The following footnote is not applicable to the DS1, E1, DS3, or STS1 Rider rate elements or the DS1, E1, or DS3/STS1 Shared Transport rate elements of Custom Connect. This service is grandfathered and effective March 30, 2007, orders for new Custom Connect are no longer permitted.

© 2022 Frontier Communications Parent, Inc. All rights reserved.

20. Optical Networking (Cont'd)

(D) Application of Rates and Charges (Cont'd)

(2) Optical Network Transport*

The transport element provides for the interoffice Optical Network transport between wire centers on Telephone Company defined LANs. Each IC customer Connect must have its own transport. Transport cannot be shared among IC customer Connects.

Optical Network Transport may be provided as LAN-wide, LAN-wide Premium or Point-to-Point. J-SONET Transport may be purchased in DS0, DS1, or DS3 bandwidths. Band SONET Transport may be purchased in DS0, DS1, or DS3 Bandwidths.

(a) Reserved for Future Use

(b) Reserved for Future Use

(c) Reserved for Future Use

(d) Reserved for Future Use

(e) J-SONET Transport provides transport between the serving wire centers of the CDLs. J-SONET Transport may be provided at DS0, DS1 or DS3 bandwidth levels as required by the customer. The bandwidth of the transport must be the same as the bandwidth of the CO Connect or the payload, e.g., DS0 J-SONET requires a DS0 connect and DS3 J-SONET Transport requires a DS3 CO Connect. J-SONET Transport may be ordered as switched or special access.

J-SONET Transport is provided at a non-distance sensitive flat rated monthly charge per LAN traversed.

* Grandfathered to existing service effective December 26, 1998.

© 2022 Frontier Communications Parent, Inc. All rights reserved.

20. Optical Networking (Cont'd)

(D) Application of Rates and Charges (Cont'd)

(2) Optical Network Transport* (Cont'd)

The transport element provides for the interoffice Optical Network transport between wire centers on Telephone Company defined LANs. Each IC customer Connect must have its own transport. Transport cannot be shared among IC customer Connects.

Optical Network Transport may be provided as LAN-wide, LAN-wide Premium or Point-to-Point. Band SONET Transport may be purchased in DS0, DS1, or DS3 Bandwidths.

(f) Banded Optical Transport provides transport between the serving wire center of the interexchange access customer's location and the access customer's end user premises. Banded Optical Transport may be provided at DS0, DS1, DS3, or STS1 bandwidth levels as required by the customer. When Banded Optical is ordered at a DSO level, the customer must request a minimum of a DS1 interface at the IC customer wire center and will be charged for the appropriate rider (i.e., DS1 or DS3). Banded Optical Transport is provided with a service guarantee as shown in 2.8.1.1(A)(9). For subscription to Banded Optical Transport, the customer must have an accumulative demand requirement, whether provided pursuant to this Section 20 or as Telephone Company provided banded SONET transport, equivalent to an average of nine DS3s, i.e., 5,978 channels, per LATA. The Telephone Company will include Banded Optical Transport ordered pursuant to this Section 20 and Telephone Company provided banded SONET transport for the customer's accumulative demand requirement. The bandwidth will be reviewed annually at a mutually agreed upon date by the customer and the Company. An allowance of minus 2% will be considered as having met the commitment level. Should the bandwidth fall below minus 2%, the customer will have thirty (30) days to meet the bandwidth requirement. If not met, the customer will be notified by the Telephone Company and will be required to convert from Banded Optical Transport to another Ethernet Private Line Transport option.

* Grandfathered to existing service effective December 26, 1998.

© 2022 Frontier Communications Parent, Inc. All rights reserved.

20. Optical Networking (Cont'd)

(D) Application of Rates and Charges (Cont'd)

(2) Optical Network Transport* (Cont'd)

(f) (Cont'd)

Banded Optical Transport is provided at a flat-rated monthly charge for one (1) year, three (3) year, five (5) year, or seven (7) year Term Payment Plans (TPPs). The term period for Banded Optical Transport cannot exceed the term period of the Connect. Banded Optical Transport includes the special access line from the end user serving wire center to the end user premises, for both on-net and off-net, with the exception of jointly provided Banded Optical Transport. Banded Optical Transport will be provisioned at the highest network facility available at the time of the order. The monthly rate will be determined based on the mileage between the serving wire centers of the customer designated locations and is applicable on a per circuit basis. Mileage will be rounded up to the next whole mile except when the CDLs are collocated.

When both customer designated locations are provided by the Telephone Company, wholly provided, the monthly rates as shown in 20(L)(66) are applicable. When one of the customer designated locations is provided by another telephone company, or the customer terminates at a multiplexer in a wire center on the IOF, jointly provided, the monthly rates as shown in 20(L)(67) shall apply. For jointly provided transport with another telephone company, the meet point billing mileage calculation is specified in Section 2.7.3.

Banded Optical Transport may be ordered as switched or special access.

* Grandfathered to existing service effective December 26, 1998.

© 2022 Frontier Communications Parent, Inc. All rights reserved.

20. Optical Networking (Cont'd)

(D) Application of Rates and Charges (Cont'd)

(3) Payload*

Payload is the customer service riding on the shared IOF transport and/or the activation of the service(s). Payload is provided at a flat-rated monthly recurring charge which includes add/drop multiplexing and is applicable at the wire center for each customer designated location, with the exception of CO Connects and Banded Optical Transport. Payload services include DS1, DS3, OC3, OC3c, OC12, OC12c, STS1 and STM1. Payload services may be ordered as switched or special access.

The monthly rates for DS1 payloads are shown in 20(L).

(E) Reserved for Future Use

(F) Reserved for Future Use

* Grandfathered to existing service effective December 26, 1998.

© 2022 Frontier Communications Parent, Inc. All rights reserved.

20. Optical Networking (Cont'd)

(G) Rate Regulations

Optical Networking may be ordered under a one (1), three (3), five (5), or seven (7) year Term Payment Plan (TPP). Any TPP for these services is subject to an TPP Termination Liability Charge as specified herein.

When ordered together the TPP applies to Connects, Banded Optical Transport and Additional Nodes

(1) Changes in Length of a TPP

Prior to the expiration of a TPP period, the customer may elect to convert to a new TPP period of the same or different length, subject to the following conditions:

- No credit will be given for the new period for payments made under the original TPP arrangement.
- NRCs will not be reapplied for existing services.
- If the new TPP period is shorter in length than the time remaining under the existing TPP, the change to the new TPP period constitutes a disconnect of the existing TPP service and termination liability charges will apply.
- The rates for the new period will be the rates currently in effect at the time of the change.
- If the customer subscribes to a new TPP which is greater in length than the initial TPP term and discontinues one or all of the service elements prior to the expiration of the new termination liability period, the termination liability, as set forth below, will apply based on the remainder of the TPP period in effect at the time of the disconnect.

Year in which Service Is Discontinued	Liability Rate
1	100%
2	75%
3	50%
4 or more	25%

© 2022 Frontier Communications Parent, Inc. All rights reserved.

20. Optical Networking (Cont'd)

(G) Rate Regulations (Cont'd)

(2) Renewal Options

Ninety (90) days prior to the expiration of the existing TPP, the customer shall submit in writing to select a new TPP or disconnect service. If no notice is received, the Company will automatically reconnect the customer to a new TPP with the same term life as the previous.

After completion of the initial TPP term and the customer subscribes to a new term that is longer in length the termination liability, as set forth below, will apply based on the remainder of the TPP period in effect at the time of the disconnect.

Year in which Service Is Discontinued	Liability Rate
1	20%
2	15%
3	10%
4 or more	5%

(3) Conversion

When an existing customer purchases Optical Networking, the customer may upgrade their existing special access services to Optical Networking. The upgrade may require physical network changes, as well as changes to existing billing arrangements. Physical changes consist of reterminating existing services not currently utilizing the Optical network.

Termination liability charges will not apply to the customer's existing services provided the Optical Networking TPP term commitment agreement is equal to or longer in length than the time remaining for the existing arrangement.

(4) Rate Changes

The TPP rates are exempt from Telephone Company initiated increases for the length of the plan, however, decreases will be passed on to the customer. Rate changes may occur as a result of FCC action.

© 2022 Frontier Communications Parent, Inc. All rights reserved.

20. Optical Networking (Cont'd)

(G) Rate Regulations (Cont'd)

(5) Termination Liability

In the event the customer discontinues one or all of the service elements (Connect, Banded Optical Transport, Additional Node) prior to the end of the termination liability period, initial termination liability charges, as set forth below, will apply based on the remainder of the TPP period in effect at the time of the disconnect.

Year in which Service Is Discontinued	Liability Rate
1	40%
2	35%
3	30%
4 or more	25%

(6) Termination Without Liability

For Banded Optical Transport, termination charges will not apply when the customer disconnects a DS0 or DS1 on a circuit by circuit basis provided the required accumulative bandwidth is met as shown in 20(D)(2)(f).

(7) Upgrade to Higher Bandwidth

The Customer who has grown incrementally, may elect to upgrade service to a higher bandwidth during a TPP period to gain economic efficiencies. Termination charges will not apply as long as the upgraded service remains connected at the same point of termination(s), unless the network is being redesigned to gain network efficiency. Nonrecurring charges associated with the new bandwidth upgrade shall apply.

(8) Change in Interface

The Customer may elect to change service from a 2-fiber interface to a 4-fiber interface during a TPP. Termination charges will not apply as long as the changed service remains at the same point of termination(s).

© 2022 Frontier Communications Parent, Inc. All rights reserved.

20. Optical Networking (Cont'd)

(H) Off-Net Wire Center

Off-Net wire center is a wire center not a designated Optical Networking wire center office. The customer may order a DS0, DS1, DS3 or E1 to the Off-Net wire center. Mileage charges will be determined based on airline miles to the nearest on-net wire center at the transport rates shown in Section 5.

Circuits connected to the Off-Net wire center will be billed existing tariffed rates as shown in Section 5.

(I) Shared Use

Shared Use is the provisioning of Switched Access over Optical Networking. Rating as Optical Networking will continue until such time as a portion of the available Optical Networking capacity is used to provide Switched Access service.

For shared use, a special access DS3 interface must be ordered between the IC customer and the IC customer wire center. When switched trunks are ordered, a DS1 switched interface must be ordered for the switched trunks. A DS3 or DS1 interface ordered as Switched Access will be used exclusively for Switched Access.

As individual channels are activated for Switched Access, monthly charges will be adjusted between Switched Access and Optical Networking Access based on the number of channels used for Switched Access and the remaining Optical Networking Access facility.

The total Shared Use for Switched Access charge is equal to the number of channels used for Switched Access divided by 24 for DS1 or 672 for DS3 times the Monthly Switched Access Charges. The monthly Switched Access rates used will be the current rates for Switched Access Entrance Facility, Direct-Trunked Transport Facility, Direct-Trunked Transport Termination and Multiplexer.

(J) Reserved for Future Use

© 2022 Frontier Communications Parent, Inc. All rights reserved.

FACILITIES FOR INTERSTATE ACCESS

20. Optical Networking (Cont'd)

(K) Optical Networking LANs *

State	CLLI	Wire Center	LAN Name	Contiguous LAN
CA	CMRLCAXF	CAMARILLO	Thousand Oaks	
CA	ELRICAXF	EL RIO	Thousand Oaks	
CA	MUGUCAXF	MUGU	Thousand Oaks	
CA	NWPKCAXF	NEWBURY PARK	Thousand Oaks	
CA	OXNRCAXF	OXNARD	Thousand Oaks	
CA	OXNRCAXG	MANTILLA	Thousand Oaks	
CA	THOKCAXF	THOUSAND OAKS	Thousand Oaks	
CA	THOKCAXH	CONEJO	Thousand Oaks	
CA	BELRCAXF	BEL AIR	Santa Monica/West LA	
CA	GRHLCAXF	GRANADA HILLS	Santa Monica/West LA	
CA	MALBCAXF	ZUMA	Santa Monica/West LA	
CA	MALBCAXG	MALIBU	Santa Monica/West LA	
CA	PACMCAXF	PACOIMA	Santa Monica/West LA	
CA	SNFNCAXG	SAN FERNANDO	Santa Monica/West LA	
CA	SNLDCAXF	SUNLAND/TUJUNGA	Santa Monica/West LA	
CA	SNMNCAXG	SANTA MONICA	Santa Monica/West LA	
CA	SNMNCAXJ	SUNSET	Santa Monica/West LA	
CA	SPLVCAXF	SEPULVEDA	Santa Monica/West LA	
CA	SYLMCAXF	SYLMAR	Santa Monica/West LA	
CA	WLANCAXF	WEST LOS ANGELES	Santa Monica/West LA	
CA	WLANCAXG	WESTWOOD	Santa Monica/West LA	
CA	WLANCAXH	BUNDY SM	Santa Monica/West LA	
CA	WLANCAXJ	UNIVERSITY	Santa Monica/West LA	
CA	LNCSCAXG	LANCASTER	Santa Monica/West LA	
CA	CLCYCAXG	MAR VISTA	Santa Monica/West LA	Long Beach
CA	CRPRCAXF	CARPINTERIA	Santa Barbara	
CA	ELWDCAXF	ELLWOOD	Santa Barbara	
CA	GOLTCAXF	GOLETA	Santa Barbara	
CA	MNTTCAXF	MONTECITO	Santa Barbara	
CA	SNBBCAXF	SANTA BARBARA	Santa Barbara	
CA	SNBBCAXG	LAS POSITAS	Santa Barbara	
CA	LMPCCAXF	LOMPOC	Santa Barbara	
CA	ORCTCAXG	BRADLEY	Santa Barbara	
CA	SNTMCAXF	SANTA MARIA	Santa Barbara	
CA	SURFCAXF	SURF	Santa Barbara	

* Reference 20(C) for availability of service.

© 2022 Frontier Communications Parent, Inc. All rights reserved.

FACILITIES FOR INTERSTATE ACCESS

20. Optical Networking (Cont'd)

(K) Optical Networking LANs * (Cont'd)

State	CLLI	Wire Center	LAN Name	Contiguous LAN
CA	EDMTCAXF	EDGEMONT	San Bernardino	
CA	LMLNCAXF	LOMA LINDA	San Bernardino	
CA	MENTCAXF	MENTONE	San Bernardino	
CA	MSCYCAXF	MUSCOY	San Bernardino	
CA	MURTCAXF	MURRIETA	San Bernardino	
CA	RDLDCAXF	REDLANDS	San Bernardino	
CA	CCMNCAXF	CUCAMONGA	San Bernardino	
CA	BUMTCAXF	BEAUMONT	San Bernardino	
CA	ELSNCAXG	ELSINORE GRAND	San Bernardino	
CA	ETWNCAXF	ETIWANDA	San Bernardino	
CA	SNCYCAXF	SUN CITY	San Bernardino	
CA	PERSCAXF	PERRIS	San Bernardino	
CA	SNBRCAXH	MARSHALL	San Bernardino	
CA	SNBRCAXK	SAN BERNARDINO	San Bernardino	
CA	ELSNCAXF	ELSINORE MAIN	San Bernardino	
CA	HEMTCAXF	HEMET	San Bernardino	
CA	AZUSCAXF	AZUSA	Ontario	
CA	BLPKCAXF	BALDWIN PARK	Ontario	
CA	CHNOCAXF	CHINO	Ontario	
CA	CLMTCAXF	CLAREMONT	Ontario	
CA	COVNCAXF	COVINA	Ontario	
CA	DMBRCAXF	DIAMOND BAR	Ontario	
CA	GLNDCAXF	GLENDORA	Ontario	
CA	LAPNCAXF	ROWLAND	Ontario	
CA	LAPNCAXG	LA PUENTE	Ontario	Bellflower/Whittier
CA	LAPNCAXL	MAPLEGROVE	Ontario	
CA	LSSRCAXF	LOS SERRANOS	Ontario	
CA	LVRNCAXF	LA VERNE	Ontario	
CA	MNRVCAXG	MONROVIA	Ontario	
CA	ONTRCAXM	ONTARIO AIRPORT	Ontario	
CA	ONTRCAXG	ONTARIO SOUTH	Ontario	
CA	ONTRCAXF	ONTARIO	Ontario	San Bernardino
CA	ONTRCAXP	ONTARIO	Ontario	
CA	POMNCAXF	POMONA	Ontario	
CA	SNDMCAXF	SAN DIMAS	Ontario	
CA	SRMDCAXF	SIERRA MADRE	Ontario	
CA	WLNTCAXF	WALNUT	Ontario	
CA	UPLDCAXF	UPLAND	Ontario	San Bernardino

* Reference 20(C) for availability of service.

© 2022 Frontier Communications Parent, Inc. All rights reserved.

FACILITIES FOR INTERSTATE ACCESS

20. Optical Networking (Cont'd)

(K) Optical Networking LANs * (Cont'd)

State	CLLI	Wire Center	LAN Name	Contiguous LAN
CA	HNBHCAXF	SLATER	Long Beach	
CA	HNBHCAXG	HUNTINGTON BEACH	Long Beach	
CA	HNBHCAXH	BUSHARD	Long Beach	
CA	HNBHCAXL	WARNER	Long Beach	
CA	HRBHCAXA	REDONDO	Long Beach	
CA	LNBHCAXF	LONG BEACH MAIN	Long Beach	
CA	LNBHCAXJ	LONG BEACH	Long Beach	
CA	LNBHCAXH	MARKET	Long Beach	
CA	LNBHCAXL	MARTIN L. KING	Long Beach	
CA	LNBHCAXM	CLARK	Long Beach	
CA	LNBHCAXT	TERMINO	Long Beach	
CA	MNBHCAXF	MANHATTAN	Long Beach	
CA	PDRYCAXF	DEL REY	Long Beach	Santa Monica/West LA
CA	RDBHCAXF	EL NIDO	Long Beach	
CA	RLHLCAXF	ROLLING HILLS	Long Beach	
CA	LNBHCAXS	STADIUM	Long Beach	Bellflower/Whittier
	CA	SLBHCAXF	ALAMITOS	Long Beach
CA	TRNCCAXF	DEL AMO	Long Beach	
CA	TRNCCAXG	PALOS VERDES	Long Beach	
CA	WMNSCAXF	WESTMINSTER	Long Beach	
CA	ARTSCAXF	ARTESIA	Bellflower/Whittier	Long Beach
CA	BLFLCAXF	BELLFLOWER	Bellflower/Whittier	
CA	BLGRCAXF	FLORENCE	Bellflower/Whittier	
CA	DWNYCAXF	DOWNEY	Bellflower/Whittier	
CA	DWNYCAXG	IMPERIAL	Bellflower/Whittier	
CA	LAHBCAXF	LA HABRA	Bellflower/Whittier	
CA	LNBHCAXS	STADIUM	Bellflower/Whittier	Long Beach
CA	NRWLCAXF	NORWALK	Bellflower/Whittier	
CA	NRWLCAXG	ALONDRA	Bellflower/Whittier	
CA	PCRVCAXF	RIO HONDO	Bellflower/Whittier	
CA	WHTRCAXF	WHITTIER SOUTH	Bellflower/Whittier	
CA	WHTRCAXG	WHITWOOD	Bellflower/Whittier	
CA	WHTRCAXH	VALLEY VIEW	Bellflower/Whittier	
CA	WHTRCAXJ	PICO	Bellflower/Whittier	
CA	NOVTCAXF	NOVATO	Navato	

* Reference 20(C) for availability of service.

© 2022 Frontier Communications Parent, Inc. All rights reserved.

FACILITIES FOR INTERSTATE ACCESS

20. Optical Networking (Cont'd)

(K) Optical Networking LANs * (Cont'd)

State	CLLI	Wire Center	LAN Name	Contiguous LAN
CA	PERSCAXF	PERRIS	Tri-Valley	
CA	HEMTCAXF	HEMET	Tri-Valley	
CA	RNCACAXF	RANCHO	Tri-Valley	
CA	ELSNCAXF	ELSINORE MAIN	Tri-Valley	
CA	SNCYCAXF	SUN CITY	Tri-Valley	
CA	RDLDCAXF	REDLANDS	Tri-Valley	
CA	SNJCCAXG	SAN JACINTO	Tri-Valley	
CA	SNYMCAXF	SUNNYMEAD	Tri-Valley	
CA	BUMTCAXF	BEAUMONT	Tri-Valley	
CA	VLVSCAXF	VAL VISTA	Tri-Valley	
CA	EDMTCAXF	EDGEMONT	Tri-Valley	
CA	HMLDCAXF	HOMELAND	Tri-Valley	
CA	MURTCAXF	MURRIETA	Tri-Valley	
CA	ELSNCAXG	ELSINORE GRAND	Tri-Valley	
CA	QUVYCAXF	QUAIL VALLEY	Tri-Valley	
CA	TMCLCAXG	TEMECULA	Tri-Valley	
CA	TMCLCAXH	RED HAWK	Tri-Valley	
CA	PLSPCAXG	PALM SPRINGS	Coachella Valley	
CA	PNMGCAXF	RANCHO MIRAGE	Coachella Valley	
CA	PLDSCAXF	PALM DESERT	Coachella Valley	
CA	DHSPCAXF	DESERT HOT SPRINGS	Coachella Valley	
CA	THPLCAXF	THOUSAND PALMS	Coachella Valley	
CA	BRDNCAXF	BERMUDA DUNES	Coachella Valley	
CA	INDICAXG	INDIO	Coachella Valley	
CA	CCHLCAXF	COACHELLA VALLEY	Coachella Valley	
CA	YCVYCAXG	YUCCA VALLEY	Coachella Valley	
CA	JSTRCAXF	JOSHUA TREE	Coachella Valley	
CA	TWPLCAXF	29 PALMS	Coachella Valley	
CA	TWPLCAXG	MARINE PALMS	Coachella Valley	

* Reference 20(C) for availability of service.

© 2022 Frontier Communications Parent, Inc. All rights reserved.

FACILITIES FOR INTERSTATE ACCESS

20. Optical Networking (Cont'd)

(K) Optical Networking LANs * (Cont'd)

State	CLLI	Wire Center	LAN Name	Contiguous LAN
FL	ALFAFLXA	ALAFIA	Wimauma	
FL	PLMTFLXA	PALMETTO	Wimauma	Sarasota/Bradenton
FL	RSKNFLXA	RUSKIN	Wimauma	
FL	WIMMFLXA	WIMAUMA	Wimauma	
FL	ANMRFLXA	ANNA MARIA	Sarasota/Bradenton	
FL	BRBAFLXA	BRADENTON BAY	Sarasota/Bradenton	
FL	BRTNFLXX	BRADENTON MAIN	Sarasota/Bradenton	
FL	ENWDFLXA	ENGLEWOOD	Sarasota/Bradenton	
FL	LGBKFLXA	LONGBOAT KEY	Sarasota/Bradenton	
FL	NRSDFLXA	SARASOTA NORTHSIDE		Sarasota/Bradenton
FL	UOSPRFLXA	OSPREY	Sarasota/Bradenton	
FL	PLSLFLXA	PALMA SOLA	Sarasota/Bradenton	
FL	SEKYFLXA	SIESTA KEY	Sarasota/Bradenton	
FL	SPRGFLXA	SARASOTA SPRINGS	Sarasota/Bradenton	
FL	SRSTFLXA	SARASOTA MAIN	Sarasota/Bradenton	
FL	SSDSFLXA	SARASOTA SOUTHSIDE		Sarasota/Bradenton
FL	VENCFLXA	VENICE MAIN	Sarasota/Bradenton	
FL	VENCFLXS	VENICE SOUTH	Sarasota/Bradenton	
FL	NRPTFLXA	NORTH PORT	Sarasota/Bradenton	
FL	ABDLFLXA	AUBURNDALE	Polk	
FL	HGLDFLXA	HIGHLANDS	Polk	
FL	LKLDFLXA	LAKELAND MAIN	Polk	
FL	LKLDFLXE	LAKELAND EAST	Polk	
FL	LKLDFLXN	LAKELAND NORTH	Polk	
FL	PTCYFLXA	PLANT CITY	Polk	
FL	PKCYFLXA	POLK CITY	Polk	
FL	WNHNFLXC	WINTER HAVEN	Polk	
FL	ZPHYFLXA	ZEPHYRHILLS	Polk	
FL	BAYUFLXA	BAYOU	St. Petersburg/Clearwater	
FL	CLWRFLXA	CLEARWATER	St. Petersburg/Clearwater	
FL	CNSDFLXA	COUNTRYSIDE	St. Petersburg/Clearwater	
FL	DNDNFLXA	DUNEDIN	St. Petersburg/Clearwater	
FL	FHSDFLXA	FEATHERSOUND	St. Petersburg/Clearwater	Hillsborough
FL	GNDYFLXA	GANDY	St. Petersburg/Clearwater	
FL	INRKFLXX	INDIAN ROCKS	St. Petersburg/Clearwater	

* Reference 20(C) for availability of service.

© 2022 Frontier Communications Parent, Inc. All rights reserved.

FACILITIES FOR INTERSTATE ACCESS

20. Optical Networking (Cont'd)

(K) Optical Networking LANs * (Cont'd)

State	CLLI	Wire Center	LAN Name	Contiguous LAN	
FL	LLMNFLXA	LEALMAN	St. Petersburg/Clearwater		
FL	LRGOFLXA	LARGO	St. Petersburg/Clearwater		
FL	NGBHFLXA	NORTH GULF BEACH	St. Petersburg/Clearwater		
FL	PNLSFLXA	PINELLAS	St. Petersburg/Clearwater		
FL	PSDNFLXA	PASADENA	St. Petersburg/Clearwater		
FL	SGBEFLXA	SOUTH GULF BEACH	St. Petersburg/Clearwater		
FL	SKWYFLXA	SKYWAY	St. Petersburg/Clearwater		
FL	SPBGFLXA	ST. PETERSBURG MAIN	St. Petersburg/Clearwater		
FL	SPBGFLXS	ST. PETERSBURG SOUTH	St. Petersburg/Clearwater		
FL	STGRFLXA	ST. GEORGE	St. Petersburg/Clearwater		Pasco
FL	HDSNFLXA	HUDSON	Pasco		
FL	MNLKFLXA	MOON LAKE	Pasco		
FL	NPRCFLXA	NEW PORT RICHEY	Pasco		
FL	SNSPFLXA	SEVEN SPRINGS	Pasco		
FL	TRSPFLXA	TARPON SPRINGS	Pasco		
FL	BHPKFLXA	BEACH PARK	Hillsborough		
FL	CRWDFLXA	CARROLLWOOD	Hillsborough		
FL	HYPKFLXA	HYDE PARK	Hillsborough		
FL	KYSTFLXA	KEYSTONE	Hillsborough		
FL	LUTZFLXA	LUTZ	Hillsborough		
FL	OLDSFLXA	OLDSMAR	Hillsborough	Pasco	
FL	SLSPFLXA	SULPHUR SPRINGS	Hillsborough		
FL	SMNLFLXA	SEMINOLE	Hillsborough		
FL	SWTHFLXA	SWEETWATER	Hillsborough		
FL	TAMPFLXE	TAMPA EAST	Hillsborough	Wimauma	
FL	TAMPFLXX	TAMPA MAIN	Hillsborough		
FL	TMTRFLXA	TEMPLE TERRACE	Hillsborough		
FL	UNVRFLXA	UNIVERSITY	Hillsborough		
FL	WLCHFLXA	WESLEY CHAPEL	Hillsborough		
FL	WLCRFLXA	WALLCRAFT	Hillsborough		
FL	WSSDFLXA	TAMPA WESTSIDE	Hillsborough		
FL	YBCTFLXA	YBOR	Hillsborough		
FL	BRNDFLXA	BRANDON	Hillsborough	Polk	
FL	LNLKFLA99H	LAND O'LAKES	Hillsborough		

* Reference 20(C) for availability of service.

© 2022 Frontier Communications Parent, Inc. All rights reserved.

FACILITIES FOR INTERSTATE ACCESS

20. Optical Networking (Cont'd)

(K) Optical Networking LANs * (Cont'd)

State	CLLI	Wire Center	LAN Name	Contiguous LAN
TX	GRLDTXXA	GARLAND MAIN	Plano	
TX	GRLDTXXB	GARLAND SOUTH	Plano	
TX	GRLDTXXC	GARLAND NORTH	Plano	
TX	PLANTXXA	PLANO MAIN	Plano	
TX	PLANTXXB	PLANO WEST	Plano	
TX	PLANTXXD	PLANO NORTHWEST	Plano	Carrollton/Lewisville
TX	PLANTXXF	PLANO CROSSCREEK	Plano	
TX	PLANTXXK	PLANO NORTH	Plano	
TX	WYLITXXA	WYLIE	Plano	
TX	SHMNTXXA	SHERMAN	Plano	
TX	DFIATXXA	DFW AIRPORT MAIN	Irving	
TX	DFIATXXA	DFW AIRPORT MAIN	Irving	
TX	IRNGTXXA	IRVING WEST	Irving	
TX	IRNGTXXB	IRVING MAIN	Irving	
TX	IRNGTXXC	IRVING EAST	Irving	
TX	IRNGTXXD	IRVING SOUTHWEST	Irving	
TX	IRNGTXXE	IRVING NORTH	Irving	
TX	IRNGTXXF	IRVING WOODBINE	Irving	
TX	IRNGTXXG	IRVING WALNUT HILL	Irving	
TX	CRTNTXXA	CARROLLTON MAIN	Carrollton/Lewisville	
TX	CRTNTXXB	CARROLLTON NORTH	Carrollton/Lewisville	
TX	CRTNTXXC	CARROLLTON NORTHEAST	Carrollton/Lewisville	Plano
TX	CRTNTXXD	CARROLLTON SOUTHEAST	Carrollton/Lewisville	
TX	GRPVTXXA	GRAPEVINE MAIN	Carrollton/Lewisville	Irving
TX	KLLRTXXA	KELLER MAIN	Carrollton/Lewisville	
TX	LWVLTXXA	LEWISVILLE MAIN	Carrollton/Lewisville	
TX	LWVLTXXB	LEWISVILLE SOUTH	Carrollton/Lewisville	Irving
TX	LWVLTXXC	LEWISVILLE WEST	Carrollton/Lewisville	
TX	LWVLTXXF	LEWISVILLE GARDEN RIDGE	Carrollton/Lewisville	
TX	LWVLTXXE	LEWISVILLE ROUND GROVE	Carrollton/Lewisville	
TX	DNTNTXXA	DENTON	Carrollton/Lewisville	

* Reference 20(C) for availability of service.

© 2022 Frontier Communications Parent, Inc. All rights reserved.

FACILITIES FOR INTERSTATE ACCESS

20. Optical Networking (Cont'd)

(K) Optical Networking LANs * (Cont'd)

State	CLLI	Wire Center	LAN Name	Contiguous LAN
TX	BRYNTXXA	BRYAN	Bryan	
TX	BRYNTXXB	BRYAN	Bryan	
TX	CLSTTXXA	COLLEGE STATION	Bryan	
TX	CLSTTXXB	COLLEGE STATION	Bryan	
TX	RWLTTXXA	ROWLETT MAIN	Rowlett	
TX	PLPTTXXA	PILOT POINT	Pilot Point	
TX	WHWRTXXA	WHITEWRIGHT	Whitewright	
TX	WHBOTXXC	WHITESBORO	Whitesboro	
TX	BYTNTXXA	BAYTOWN MAIN	Baytown	
TX	BYTNTXXC	BAYTOWN NORTH	Baytown	
TX	BYTNTXXB	BAYTOWN WEST	Baytown	
TX	CRSBTXXA	CROSBY MAIN	Baytown	
TX	HGLNTXXA	HIGHLANDS MAIN	Baytown	
TX	SANGTXXA	SAN ANGELO MAIN	San Angelo	
TX	SANGTXXB	SAN ANGELO SOUTHWEST	San Angelo	
TX	SANGTXXC	SAN ANGELO SOUTHEAST	San Angelo	
TX	SANGTXX2	LAKE NASWORTHY	San Angelo	

* Reference 20(C) for availability of service.

© 2022 Frontier Communications Parent, Inc. All rights reserved.

20. Optical Networking (Cont'd)

(L) Rates and Charges**

(1) Connect - CO Connect - DS0*

Jurisdiction	Monthly Rate	Two Year Monthly Rate	Three Year Monthly Rate	Five Year Monthly Rate
Florida	$12.00	$11.50	$11.00	$10.00

Connect - CO Connect – DS3*

Jurisdiction	Monthly Rate
California	$135.00
Florida	135.00

(2) Reserved for Future Use

(3) Reserved for Future Use

(4) Reserved for Future Use

(5) Reserved for Future Use

(6) Reserved for Future Use

(7) Reserved for Future Use

(8) Reserved for Future Use

* Grandfathered to exiting service effective December 26, 1998.

** These rates and charges apply to both Price Bands and N-MSA rates and charges.

© 2022 Frontier Communications Parent, Inc. All rights reserved.

20. Optical Networking (Cont'd)

(L) Rates and Charges** (Cont'd)

(9) Reserved for Future Use

(10) Reserved for Future Use

(11) Reserved for Future Use

(12) Reserved for Future Use

(13) Connect - Dual Route - OC3 Electrical*

Jurisdiction	Three Year Monthly Rate
California	$2,450.00

(14) Reserved for Future Use

(15) Reserved for Future Use

(16) Reserved for Future Use

(17) Connect - Dual Route - OC24 Electrical*

Jurisdiction	Three Year Monthly Rate
California	$6,900.00

* Grandfathered to exiting service effective December 26, 1998.

** These rates and charges apply to both Price Bands and N-MSA rates and charges.

© 2022 Frontier Communications Parent, Inc. All rights reserved.

20. Optical Networking (Cont'd)

(L) Rates and Charges** (Cont'd)

(18) Reserved for Future Use

(19) Reserved for Future Use

(20) Reserved for Future Use

(21) Reserved for Future Use

(22) Reserved for Future Use

(23) Reserved for Future Use

(24) Reserved for Future Use

(25) Reserved for Future Use

(26) Reserved for Future Use

(27) Reserved for Future Use

(28) Reserved for Future Use

** These rates and charges apply to both Price Bands and N-MSA rates and charges.

© 2022 Frontier Communications Parent, Inc. All rights reserved.

20. Optical Networking (Cont'd)

(L) Rates and Charges** (Cont'd)

(29) Express Connect # - First System - OC3

Jurisdiction	One Year Monthly Rate	Three Year Monthly Rate	Five Year Monthly Rate	Seven Year Monthly Rate
California	$7,800.00	$7,150.00	$6,500.00	$6,400.00
Florida	7,800.00	7,150.00	6,500.00	6,400.00
Texas	7,800.00	7,150.00	6,500.00	6,400.00

Express Connect # - Additional System - OC3

Jurisdiction	One Year Monthly Rate	Three Year Monthly Rate	Five Year Monthly Rate	Seven Year Monthly Rate
California	$1,100.00	$1,100.00	$1,100.00	$1,100.00
Florida	1,100.00	1,100.00	1,100.00	1,100.00
Texas	1,100.00	1,100.00	1,100.00	1,100.00

Service availability limited. Refer to # footnote on Page 20-5.

** These rates and charges apply to both Price Bands and N-MSA rates and charges.

© 2022 Frontier Communications Parent, Inc. All rights reserved.

20. Optical Networking (Cont'd)

(L) Rates and Charges** (Cont'd)

(30) Express Connect # - First System - OC12

Jurisdiction	One Year Monthly Rate	Three Year Monthly Rate	Five Year Monthly Rate	Seven Year Monthly Rate
California	$13,500.00	$12,100.00	$11,400.00	$11,300.00
Florida	13,500.00	12,100.00	11,400.00	11,300.00
Texas	13,500.00	11,300.00	10,700.00	10,600.00

Express Connect # - Additional System - OC12

Jurisdiction	One Year Monthly Rate	Three Year Monthly Rate	Five Year Monthly Rate	Seven Year Monthly Rate
California	$2,200.00	$2,100.00	$2,100.00	$2,100.00
Florida	2,200.00	2,100.00	2,100.00	2,100.00
Texas	2,200.00	2,100.00	2,100.00	2,100.00

Service availability limited. Refer to # footnote on Page 20-5.

** These rates and charges apply to both Price Bands and N-MSA rates and charges.

© 2022 Frontier Communications Parent, Inc. All rights reserved.

20. Optical Networking (Cont'd)

(L) Rates and Charges** (Cont'd)

(30) (Cont'd)

Express Connect # - First System - OC48

Jurisdiction	One Year Monthly Rate	Three Year Monthly Rate	Five Year Monthly Rate	Seven Year Monthly Rate
California	$27,625.00	$27,125.00	$26,750.00	$26,350.00
Florida	27,625.00	27,125.00	26,750.00	26,350.00
Texas	27,625.00	27,125.00	26,750.00	26,350.00

Express Connect # - Additional System - OC48

Jurisdiction	One Year Monthly Rate	Three Year Monthly Rate	Five Year Monthly Rate	Seven Year Monthly Rate
California	$9,135.00	$9,000.00	$9,000.00	$9,000.00
Florida	9,135.00	9,000.00	9,000.00	9,000.00
Texas	9,135.00	9,000.00	9,000.00	9,000.00

Service availability limited. Refer to # footnote on Page 20-5.

** These rates and charges apply to both Price Bands and N-MSA rates and charges.

© 2022 Frontier Communications Parent, Inc. All rights reserved.

20. Optical Networking (Cont'd)

(L) Rates and Charges** (Cont'd)

(31) Flex Express Connect # - First System - OC3

Jurisdiction	One Year Monthly Rate	Three Year Monthly Rate	Five Year Monthly Rate	Seven Year Monthly Rate
California	$12,050.00	$10,600.00	$10,000.00	$9,900.00
Florida	12,050.00	10,600.00	10,000.00	9,900.00
Texas	12,050.00	10,600.00	10,000.00	9,900.00

Flex Express Connect # - Additional System - OC3

Jurisdiction	One Year Monthly Rate	Three Year Monthly Rate	Five Year Monthly Rate	Seven Year Monthly Rate
California	$1,200.00	$1,200.00	$1,200.00	$1,200.00
Florida	1,200.00	1,200.00	1,200.00	1,200.00
Texas	1,200.00	1,200.00	1,200.00	1,200.00

Service availability limited. Refer to # footnote on Page 20-6.

** These rates and charges apply to both Price Bands and N-MSA rates and charges.

© 2022 Frontier Communications Parent, Inc. All rights reserved.

20. Optical Networking (Cont'd)

(L) Rates and Charges** (Cont'd)

(31) (Cont'd)

Express and Flex Express # - Additional CDL Node - OC3

Jurisdiction	Monthly Rate	One Year Monthly Rate	Three Year Monthly Rate	Five Year Monthly Rate	Seven Year Monthly Rate
California	$3,600.00	$3,300.00	$3,300.00	$3,300.00	$3,300.00
Florida	3,600.00	3,300.00	3,300.00	3,300.00	3,300.00
Texas	3,600.00	3,300.00	3,300.00	3,300.00	3,300.00

Express and Flex Express # - Additional CO Node - OC3

Jurisdiction	Monthly Rate	One Year Monthly Rate	Three Year Monthly Rate	Five Year Monthly Rate	Seven Year Monthly Rate
California	$2,500.00	$2,200.00	$2,200.00	$2,200.00	$2,200.00
Florida	2,500.00	2,200.00	2,200.00	2,200.00	2,200.00
Texas	2,500.00	2,200.00	2,200.00	2,200.00	2,200.00

Service availability limited. Refer to # footnotes on Pages 20-5 and 20-6.

** These rates and charges apply to both Price Bands and N-MSA rates and charges.

© 2022 Frontier Communications Parent, Inc. All rights reserved.

20. Optical Networking (Cont'd)

(L) Rates and Charges** (Cont'd)

(31) (Cont'd)

Flex Express # - First System Transport - OC3

Jurisdiction	Monthly Rate
California	$170.00
Florida	170.00
Texas	170.00

Flex Express # - Additional System Transport - OC3

Jurisdiction	Monthly Rate
California	$25.00
Florida	25.00
Texas	25.00

Service availability limited. Refer to # footnote on Page 20-6.

** These rates and charges apply to both Price Bands and N-MSA rates and charges.

© 2022 Frontier Communications Parent, Inc. All rights reserved.

FACILITIES FOR INTERSTATE ACCESS

20. Optical Networking (Cont'd)

(L) Rates and Charges** (Cont'd)

(32) Flex Express Connect # - First System - OC12

Jurisdiction	One Year Monthly Rate	Three Year Monthly Rate	Five Year Monthly Rate	Seven Year Monthly Rate
California	$19,700.00	$17,600.00	$16,700.00	$16,600.00
Florida	19,700.00	17,600.00	16,700.00	16,600.00
Texas	19,700.00	17,000.00	16,200.00	16,100.00

Flex Express Connect # - Additional System - OC12

Jurisdiction	One Year Monthly Rate	Three Year Monthly Rate	Five Year Monthly Rate	Seven Year Monthly Rate
California	$2,300.00	$2,300.00	$2,300.00	$2,300.00
Florida	2,300.00	2,300.00	2,300.00	2,300.00
Texas	2,300.00	2,300.00	2,300.00	2,300.00

Service availability limited. Refer to # footnote on Page 20-6.

** These rates and charges apply to both Price Bands and N-MSA rates and charges.

© 2022 Frontier Communications Parent, Inc. All rights reserved.

20. Optical Networking (Cont'd)

(L) Rates and Charges** (Cont'd)

(32) (Cont'd)

Express and Flex Express # - Additional CDL Node - OC12

Jurisdiction	Monthly Rate	One Year Monthly Rate	Three Year Monthly Rate	Five Year Monthly Rate	Seven Year Monthly Rate
California	$6,000.00	$5,900.00	$5,800.00	$5,450.00	$5,450.00
Florida	6,000.00	5,900.00	5,800.00	5,450.00	5,450.00
Texas	5,700.00	5,600.00	5,500.00	5,250.00	5,250.00

Express and Flex Express # - Additional CO Node - OC12

Jurisdiction	Monthly Rate	One Year Monthly Rate	Three Year Monthly Rate	Five Year Monthly Rate	Seven Year Monthly Rate
California	$3,500.00	$3,425.00	$3,350.00	$3,100.00	$3,100.00
Florida	3,500.00	3,425.00	3,350.00	3,100.00	3,100.00
Texas	3,500.00	3,425.00	3,350.00	3,100.00	3,100.00

Service availability limited. Refer to # footnotes on Pages 20-5 and 20-6.

** These rates and charges apply to both Price Bands and N-MSA rates and charges.

© 2022 Frontier Communications Parent, Inc. All rights reserved.

20. Optical Networking (Cont'd)

(L) Rates and Charges** (Cont'd)

(32) (Cont'd)

Flex Express # - First System Transport - OC12

Jurisdiction	Monthly Rate
California	$240.00
Florida	240.00
Texas	240.00

Flex Express # - Additional System Transport - OC12

Jurisdiction	Monthly Rate
California	$45.00
Florida	45.00
Texas	45.00

Service availability limited. Refer to # footnote on Page 20-6.

** These rates and charges apply to both Price Bands and N-MSA rates and charges.

© 2022 Frontier Communications Parent, Inc. All rights reserved.

FACILITIES FOR INTERSTATE ACCESS

20. Optical Networking (Cont'd)

(L) Rates and Charges** (Cont'd)

(32) (Cont'd)

Flex Express Connect # - First System - OC48

Jurisdiction	One Year Monthly Rate	Three Year Monthly Rate	Five Year Monthly Rate	Seven Year Monthly Rate
California	$33,425.00	$33,100.00	$32,700.00	$32,300.00
Florida	33,425.00	33,100.00	32,700.00	32,300.00
Texas	33,425.00	33,100.00	32,700.00	32,300.00

Flex Express Connect # - Additional System - OC48

Jurisdiction	One Year Monthly Rate	Three Year Monthly Rate	Five Year Monthly Rate	Seven Year Monthly Rate
California	$11,316.00	$11,316.00	$11,316.00	$11,316.00
Florida	11,316.00	11,316.00	11,316.00	11,316.00
Texas	11,316.00	11,316.00	11,316.00	11,316.00

Service availability limited. Refer to # footnote on Page 20-6.

** These rates and charges apply to both Price Bands and N-MSA rates and charges.

© 2022 Frontier Communications Parent, Inc. All rights reserved.

20. Optical Networking (Cont'd)

(L) Rates and Charges** (Cont'd)

(32) (Cont'd)

Express and Flex Express # - Additional CDL Node - OC48

Jurisdiction	Monthly Rate	One Year Monthly Rate	Three Year Monthly Rate	Five Year Monthly Rate	Seven Year Monthly Rate
California	$12,945.00	$11,945.00	$11,945.00	$11,945.00	$11,945.00
Florida	12,945.00	11,945.00	11,945.00	11,945.00	11,945.00
Texas	12,945.00	11,945.00	11,945.00	11,945.00	11,945.00

Express and Flex Express # - Additional CO Node - OC48

Jurisdiction	Monthly Rate	One Year Monthly Rate	Three Year Monthly Rate	Five Year Monthly Rate	Seven Year Monthly Rate
California	$9,130.00	$9,130.00	$9,130.00	$9,130.00	$9,130.00
Florida	9,130.00	9,130.00	9,130.00	9,130.00	9,130.00
Texas	9,130.00	9,130.00	9,130.00	9,130.00	9,130.00

Service availability limited. Refer to # footnotes on Pages 20-5 and 20-6.

** These rates and charges apply to both Price Bands and N-MSA rates and charges.

© 2022 Frontier Communications Parent, Inc. All rights reserved.

20. Optical Networking (Cont'd)

(L) Rates and Charges** (Cont'd)

(32) (Cont'd)

Flex Express # - First System Transport - OC48

Jurisdiction	Monthly Rate
California	$500.00
Florida	500.00
Texas	500.00

Flex Express # - Additional System Transport - OC48

Jurisdiction	Monthly Rate
California	$100.00
Florida	100.00
Texas	100.00

Service availability limited. Refer to # footnote on Page 20-6.

** These rates and charges apply to both Price Bands and N-MSA rates and charges.

© 2022 Frontier Communications Parent, Inc. All rights reserved.

20. Optical Networking (Cont'd)

(L) Rates and Charges** (Cont'd)

(33) Custom Connect - Rider - DS1

Jurisdiction	Monthly Rate
California	$75.00
Florida	75.00
Texas	75.00

** These rates and charges apply to both Price Bands and N-MSA rates and charges.

© 2022 Frontier Communications Parent, Inc. All rights reserved.

20. Optical Networking (Cont'd)

(L) Rates and Charges** (Cont'd)

(33) Custom Connect - Rider – DS3

Jurisdiction	Monthly Rate
California	$250.00
Florida	250.00
Texas	250.00

** These rates and charges apply to both Price Bands and N-MSA rates and charges.

© 2022 Frontier Communications Parent, Inc. All rights reserved.

20. Optical Networking (Cont'd)

(L) Rates and Charges** (Cont'd)

(D)

(34) Reserved for Future Use

(35) Reserved for Future Use

(36) Reserved for Future Use

(37) Reserved for Future Use

(38) Reserved for Future Use

(39) Reserved for Future Use

(40) Reserved for Future Use

(41) Reserved for Future Use

(42) Reserved for Future Use

(43) Reserved for Future Use

(44) Reserved for Future Use

(45) Reserved for Future Use

** These rates and charges apply to both Price Bands and N-MSA rates and charges.

© 2022 Frontier Communications Parent, Inc. All rights reserved.

20. Optical Networking (Cont'd)

(L) Rates and Charges** (Cont'd)

(46) Transport - LAN Wide OC3*

Jurisdiction	Three Year Monthly Rate
California	$2,800.00

(47) Reserved for Future Use

(48) Transport - LAN Wide OC24*

Jurisdiction	Three Year Monthly Rate
California	$16,500.00

(49) Reserved for Future Use

(50) Reserved for Future Use

* Grandfathered to exiting service effective December 26, 1998.

** These rates and charges apply to both Price Bands and N-MSA rates and charges.

© 2022 Frontier Communications Parent, Inc. All rights reserved.

20. Optical Networking (Cont'd)

(L) Rates and Charges** (Cont'd)

(51) Transport - LAN Wide Premium OC3*

Jurisdiction	Three Year Monthly Rate
California	$4,150.00

(52) Reserved for Future Use

(53) Transport - LAN Wide Premium OC24*

Jurisdiction	Three Year Monthly Rate
California	$24,700.00

(54) Reserved for Future Use

(55) Reserved for Future Use

* Grandfathered to exiting service effective December 26, 1998.

** These rates and charges apply to both Price Bands and N-MSA rates and charges.

© 2022 Frontier Communications Parent, Inc. All rights reserved.

FACILITIES FOR INTERSTATE ACCESS

20. Optical Networking (Cont'd)

(L) Rates and Charges** (Cont'd)

(56) Transport - Point to Point Per Mile - OC3*

Jurisdiction	Three Year Monthly Rate
California	$300.00

(57) Reserved for Future Use

(58) Transport - Point to Point Per Mile - OC24*

Jurisdiction	Three Year Monthly Rate
California	$670.00

(59) Reserved for Future Use

(60) Reserved for Future Use

(61) Reserved for Future Use

(62) Reserved for Future Use

(63) Reserved for Future Use

(64) Reserved for Future Use

* Grandfathered to exiting service effective December 26, 1998.

** These rates and charges apply to both Price Bands and N-MSA rates and charges.

© 2022 Frontier Communications Parent, Inc. All rights reserved.

20. Optical Networking (Cont'd)

(L) Rates and Charges** (Cont'd)

(65) Transport J-SONET*

Jurisdiction	LAN-Wide DS1 Monthly Rate
Florida	$41.07

Jurisdiction	LAN-Wide DS3 Monthly Rate
California	$1,150.00

* Grandfathered to exiting service effective December 26, 1998.

** These rates and charges apply to both Price Bands and N-MSA rates and charges.

© 2022 Frontier Communications Parent, Inc. All rights reserved.

20. Optical Networking (Cont'd)

(L) Rates and Charges** (Cont'd)

(66) Transport - Banded Optical - DS0 (Wholly Provided)

Jurisdiction	One Year Monthly Rate	Three Year Monthly Rate
California		
0 miles	$95.00	$88.00
1 - 10 miles	97.00	90.00
11 - 20 miles	99.00	92.00
21 + miles	101.00	94.00
Florida		
0 miles	$100.00	$93.00
1 - 10 miles	102.00	95.00
11 - 20 miles	104.00	97.00
21 + miles	106.00	99.00
Texas		
0 miles	$95.00	$91.00
1 - 10 miles	97.00	93.00
11 - 20 miles	99.00	95.00
21 + miles	101.00	97.00

** These rates and charges apply to both Price Bands and N-MSA rates and charges.

© 2022 Frontier Communications Parent, Inc. All rights reserved.

20. Optical Networking (Cont'd)

(L) Rates and Charges** (Cont'd)

(66) (Cont'd)

Transport - Banded Optical - DS0 (Wholly Provided)

Jurisdiction	Five Year Monthly Rate	Seven Year Monthly Rate
California		
0 miles	$85.00	$82.00
1 - 10 miles	87.00	84.00
11 - 20 miles	89.00	86.00
21 + miles	91.00	88.00
Florida		
0 miles	$90.00	$87.00
1 - 10 miles	92.00	89.00
11 - 20 miles	94.00	91.00
21 + miles	96.00	93.00
Texas		
0 miles	$86.00	$85.00
1 - 10 miles	87.00	86.00
11 - 20 miles	90.00	89.00
21 + miles	92.00	91.00

** These rates and charges apply to both Price Bands and N-MSA rates and charges.

© 2022 Frontier Communications Parent, Inc. All rights reserved.

20. Optical Networking (Cont'd)

(L) Rates and Charges** (Cont'd)

(66) (Cont'd)

Transport - Banded Optical - DS1 (Wholly Provided)

Jurisdiction	One Year Monthly Rate	Three Year Monthly Rate
California		
0 miles	$205.00	$191.00
1 - 10 miles	285.00	268.00
11 - 20 miles	305.00	273.00
21 + miles	350.00	307.00
Florida		
0 miles	$205.00	$191.00
1 - 10 miles	285.00	273.00
11 - 20 miles	320.00	304.00
21 + miles	350.00	319.00
Texas		
0 miles	$205.00	$181.00
1 - 10 miles	285.00	252.00
11 - 20 miles	305.00	278.00
21 + miles	350.00	302.00

** These rates and charges apply to both Price Bands and N-MSA rates and charges.

© 2022 Frontier Communications Parent, Inc. All rights reserved.

20. Optical Networking (Cont'd)

(L) Rates and Charges** (Cont'd)

(66) (Cont'd)

Transport - Banded Optical - DS1 (Wholly Provided)

Jurisdiction	Five Year Monthly Rate	Seven Year Monthly Rate
California		
0 miles	$175.00	$173.00
1 - 10 miles	245.00	240.00
11 - 20 miles	260.00	255.00
21 + miles	285.00	276.00
Florida		
0 miles	$185.00	$163.00
1 - 10 miles	265.00	235.00
11 - 20 miles	295.00	258.00
21 + miles	315.00	276.00
Texas		
0 miles	$175.00	$168.00
1 – 10 miles	245.00	235.00
11 - 20 miles	270.00	258.00
21 + miles	285.00	271.00

** These rates and charges apply to both Price Bands and N-MSA rates and charges.

© 2022 Frontier Communications Parent, Inc. All rights reserved.

20. Optical Networking (Cont'd)

(L) Rates and Charges** (Cont'd)

(66) (Cont'd)

Transport - Banded Optical - DS3 (Wholly Provided)

Jurisdiction	One Year Monthly Rate	Three Year Monthly Rate
California		
0 miles	$1,800.00	$1,600.00
1 - 10 miles	2,600.00	2,400.00
11 - 20 miles	4,000.00	3,600.00
21 + miles	5,200.00	4,600.00
Florida		
0 miles	$1,800.00	$1,700.00
1 - 10 miles	2,600.00	2,550.00
11 - 20 miles	4,000.00	3,800.00
21 + miles	5,200.00	4,900.00
Texas		
0 miles	$1,800.00	$1,700.00
1 - 10 miles	2,600.00	2,450.00
11 - 20 miles	4,000.00	3,700.00
21 + miles	5,200.00	4,800.00

** These rates and charges apply to both Price Bands and N-MSA rates and charges.

© 2022 Frontier Communications Parent, Inc. All rights reserved.

20. Optical Networking (Cont'd)

(L) Rates and Charges** (Cont'd)

(66) (Cont'd)

Transport - Banded Optical - DS3 (Wholly Provided)

Jurisdiction	Five Year Monthly Rate	Seven Year Monthly Rate
California		
0 miles	$1,380.00	$1,350.00
1 - 10 miles	2,000.00	1,950.00
11 - 20 miles	3,300.00	3,200.00
21 + miles	4,300.00	4,200.00
Florida		
0 miles	$1,600.00	$1,500.00
1 – 10 miles	2,350.00	2,200.00
11 - 20 miles	3,500.00	3,200.00
21 + miles	4,600.00	4,300.00
Texas		
0 miles	$1,600.00	$1,500.00
1 - 10 miles	2,300.00	2,200.00
11 - 20 miles	3,400.00	3,200.00
21 + miles	4,500.00	4,200.00

** These rates and charges apply to both Price Bands and N-MSA rates and charges.

© 2022 Frontier Communications Parent, Inc. All rights reserved.

20. Optical Networking (Cont'd)

(L) Rates and Charges** (Cont'd)

(66) (Cont'd)

Transport - Banded Optical - STS1 (Wholly Provided)

Jurisdiction	One Year Monthly Rate	Three Year Monthly Rate
California		
0 miles	$1,800.00	$1,600.00
1 - 10 miles	2,600.00	2,400.00
11 - 20 miles	4,000.00	3,600.00
21 + miles	5,200.00	4,600.00
Florida		
0 miles	$1,800.00	$1,700.00
1 - 10 miles	2,600.00	2,550.00
11 - 20 miles	4,000.00	3,800.00
21 + miles	5,200.00	4,900.00
Texas		
0 miles	$1,800.00	$1,700.00
1 - 10 miles	2,600.00	2,450.00
11 - 20 miles	4,000.00	3,700.00
21 + miles	5,200.00	4,800.00

** These rates and charges apply to both Price Bands and N-MSA rates and charges.

© 2022 Frontier Communications Parent, Inc. All rights reserved.

20. Optical Networking (Cont'd)

(L) Rates and Charges** (Cont'd)

(66) (Cont'd)

Transport - Banded Optical - STS1 (Wholly Provided)

Jurisdiction	Five Year Monthly Rate	Seven Year Monthly Rate
California		
0 miles	$1,380.00	$1,350.00
1 - 10 miles	2,000.00	1,950.00
11 - 20 miles	3,300.00	3,200.00
21 + miles	4,300.00	4,200.00
Florida		
0 miles	$1,600.00	$1,500.00
1 – 10 miles	2,350.00	2,200.00
11 - 20 miles	3,500.00	3,200.00
21 + miles	4,600.00	4,300.00
Texas		
0 miles	$1,600.00	$1,500.00
1 - 10 miles	2,300.00	2,200.00
11 - 20 miles	3,400.00	3,200.00
21 + miles	4,500.00	4,200.00

** These rates and charges apply to both Price Bands and N-MSA rates and charges.

© 2022 Frontier Communications Parent, Inc. All rights reserved.

20. Optical Networking (Cont'd)

(L) Rates and Charges** (Cont'd)

(67) Transport - Banded Optical - DS0 (Jointly Provided)

Jurisdiction	One Year Monthly Rate	Three Year Monthly Rate
California		
1 - 10 miles	$10.30	$9.30
11 - 20 miles	12.00	11.00
21 + miles	15.50	14.50
Florida		
1 - 10 miles	$9.80	$8.80
11 - 20 miles	11.50	10.50
21 + miles	15.00	14.00
Texas		
1 - 10 miles	9.50	$8.50
11 - 20 miles	11.25	10.25
21 + miles	14.25	13.25

** These rates and charges apply to both Price Bands and N-MSA rates and charges.

© 2022 Frontier Communications Parent, Inc. All rights reserved.

20. Optical Networking (Cont'd)

(L) Rates and Charges** (Cont'd)

(67) (Cont'd)

Transport - Banded Optical - DS0 (Jointly Provided)

Jurisdiction	Five Year Monthly Rate	Seven Year Monthly Rate
California		
1 - 10 miles	$9.00	$8.75
11 - 20 miles	10.50	10.00
21 + miles	14.00	13.50
Florida		
1 - 10 miles	$8.50	$8.25
11 - 20 miles	10.00	9.50
21 + miles	13.50	13.00
Texas		
1 - 10 miles	$8.25	$8.00
11 - 20 miles	10.00	9.75
21 + miles	12.75	12.50

** These rates and charges apply to both Price Bands and N-MSA rates and charges.

© 2022 Frontier Communications Parent, Inc. All rights reserved.

20. Optical Networking (Cont'd)

(L) Rates and Charges** (Cont'd)

(67) (Cont'd)

Transport - Banded Optical - DS1 (Jointly Provided)

Jurisdiction	One Year Monthly Rate	Three Year Monthly Rate
California		
1 - 10 miles	$78.00	$72.30
11 - 20 miles)	115.00	107.00
21 + miles	150.00	12.50
Florida		
1 - 10 miles	78.00	$72.00
11 - 20 miles	115.00	107.00
21 + miles	150.00	143.00
Texas		
1 - 10 miles	78.00	$72.00
11 - 20 miles	115.00	105.00
21 + miles	150.00	143.00

** These rates and charges apply to both Price Bands and N-MSA rates and charges.

© 2022 Frontier Communications Parent, Inc. All rights reserved.

20. Optical Networking (Cont'd)

(L) Rates and Charges** (Cont'd)

(67) (Cont'd)

Transport - Banded Optical - DS1 (Jointly Provided)

Jurisdiction	Five Year Monthly Rate	Seven Year Monthly Rate
California		
1 - 10 miles	$68.00	$64.00
11 - 20 miles	101.00	94.00
21 + miles	135.00	126.00
Florida		
1 - 10 miles	$68.00	$64.00
11 - 20 miles	101.00	94.00
21 + miles	135.00	126.00
Texas		
1 - 10 miles	$68.00	$64.00
11 - 20 miles	101.00	94.00
21 + miles	135.00	126.00

** These rates and charges apply to both Price Bands and N-MSA rates and charges.

© 2022 Frontier Communications Parent, Inc. All rights reserved.

20. Optical Networking (Cont'd)

(L) Rates and Charges** (Cont'd)

(67) (Cont'd)

Transport - Banded Optical - DS3 (Jointly Provided)

Jurisdiction	One Year Monthly Rate	Three Year Monthly Rate
California		
1 - 10 miles	$775.00	$700.00
11 - 20 miles	2,200.00	2,000.00
21 + miles	3,700.00	3,300.00
Florida		
1 - 10 miles	$775.00	$725.00
11 - 20 miles	2,200.00	2,125.00
21 + miles	3,700.00	3,500.00
Texas		
1 - 10 miles	$775.00	$700.00
11 - 20 miles	2,200.00	2,025.00
21 + miles	3,700.00	3,400.00

** These rates and charges apply to both Price Bands and N-MSA rates and charges.

© 2022 Frontier Communications Parent, Inc. All rights reserved.

20. Optical Networking (Cont'd)

(L) Rates and Charges** (Cont'd)

(67) (Cont'd)

Transport - Banded Optical - DS3 (Jointly Provided)

Jurisdiction	Five Year Monthly Rate	Seven Year Monthly Rate
California		
1 - 10 miles	$650.00	$600.00
11 - 20 miles)	1,920.00	1,820.00
21 + miles	3,100.00	3,000.00
Florida		
1 – 10 miles	$675.00	$625.00
11 - 20 miles)	2,020.00	1,915.00
21 + miles	3,200.00	3,000.00
Texas		
1 - 10 miles	$650.00	$600.00
11 - 20 miles)	1,920.00	1,815.00
21 + miles	3,100.00	2,900.00

** These rates and charges apply to both Price Bands and N-MSA rates and charges.

© 2022 Frontier Communications Parent, Inc. All rights reserved.

20. Optical Networking (Cont'd)

(L) Rates and Charges** (Cont'd)

(68) Reserved for Future Use

(69) Reserved for Future Use

(70) Reserved for Future Use

(71) Payload – Single CO DS3 - Electrical*

Jurisdiction	Monthly Rate
California	$160.00
Florida	160.00

* Grandfathered to existing service effective December 26, 1998.

** These rates and charges apply to both Price Bands and N-MSA rates and charges.

© 2022 Frontier Communications Parent, Inc. All rights reserved.

20. Optical Networking (Cont'd)

20.1 Reserved for Future Use

20.2 Reserved for Future Use

20.3 Reserved for Future Use

© 2022 Frontier Communications Parent, Inc. All rights reserved.

20. Optical Networking (Cont'd)

20.4 Dedicated SONET Entrance Facilities

(A) General

Dedicated SONET Entrance Facilities (DSEF) provides high capacity DS3s with enhanced survivability between a Customer Designated Location (CDL) and the Serving Wire Center (SWC) of that CDL. DSEF is provisioned over the Telephone Company's shared SONET network that includes a self-healing ring that passes through the CDL, the SWC of that CDL, and another wire center as determined by the Telephone Company.

(B) DSEF Components

(1) DSEF consists of two basic service components:

- DSEF Terminations
- DSEF Interfaces

(a) DSEF Terminations

DSEF Terminations provide STS1 bandwidth between the CDL and the SWC of that CDL. The DSEF Terminations carry DS3 services and are delivered with enhanced survivability over the Telephone Company's self-healing SONET network. As a result, the Customer is assured continuity of communication for the DS3 service even if there is a fiber facility failure between the CDL and the SWC of that CDL.

(b) DSEF Interfaces

The DSEF Interface defines the engineering characteristics of the service hand-off at the CDL. The Customer must specify an electrical or optical interface for each DSEF Termination.

(i) Electrical Interface

The electrical DSEF Interface defines the type of service that is to be provided over the Telephone Company provided SONET network. The electrical interface type that is available is DS3 (44.736 Mbps).

The electrical DSEF Interface is used for connecting a DS3 service to a DSEF Termination at the CDL.

© 2022 Frontier Communications Parent, Inc. All rights reserved.

20. Optical Networking (Cont'd)

20.4 Dedicated SONET Entrance Facilities (Cont'd)

(B) DSEF Components (Cont'd)

(1) (Cont'd)

(b) DSEF Interfaces (Cont'd)

(ii) Optical Interface

The optical DSEF Interface defines the optical handoff at the CDL. The optical interface is used for DS3 services connecting to DSEF Terminations and being mapped to an optical interface at OC3, OC12, or OC48 bandwidth. For example, Customer has the option of connecting multiple DS3 services to DSEF Terminations and mapping multiple DS3 services to a single OC3 optical interface.

(2) A network diagram of an DSEF with DS3 electrical interface and OC3 and OC12 optical interfaces is illustrated below:

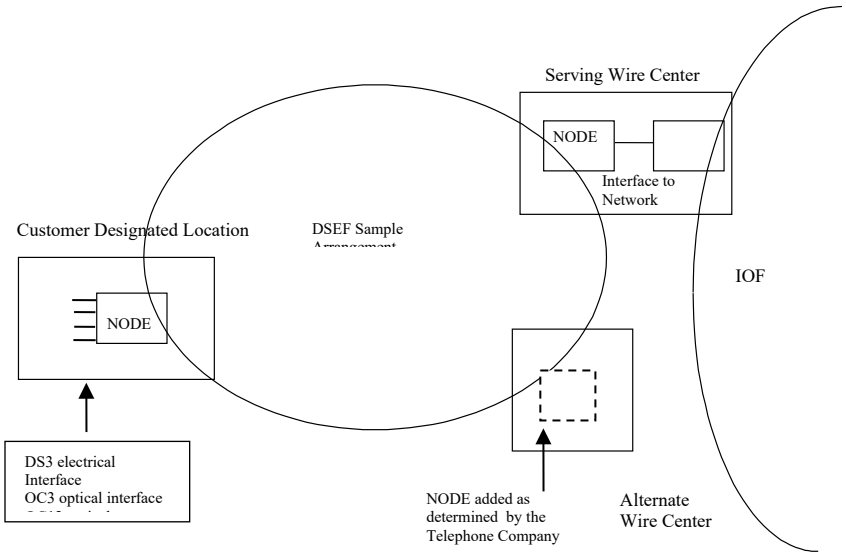

© 2022 Frontier Communications Parent, Inc. All rights reserved.

20. Optical Networking (Cont'd)

20.4 Dedicated SONET Entrance Facilities (Cont'd)

(B) DSEF Components (Cont'd)

(2) A network diagram of an DSEF with an OC48 optical interfaces is illustrated below:

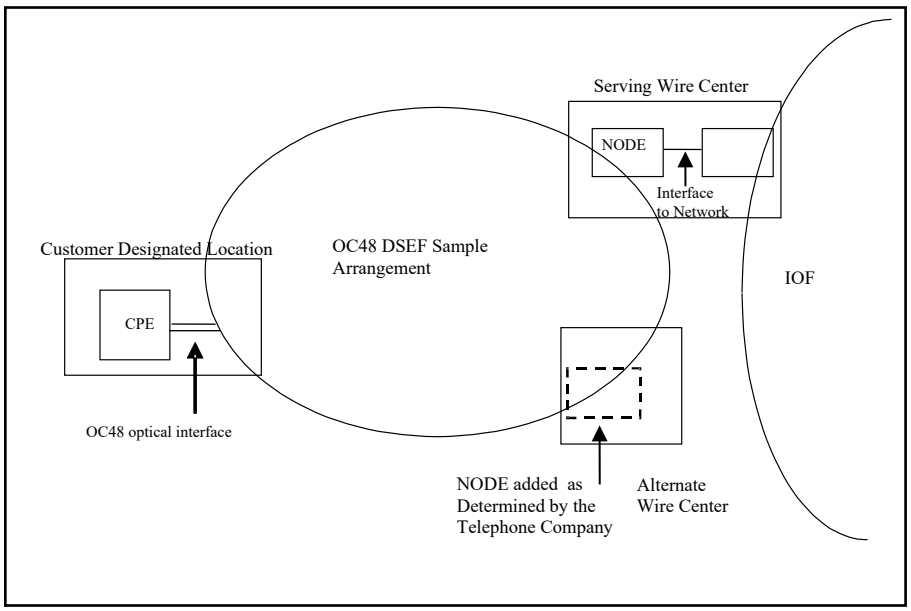

(C) Technical Specifications

Technical specifications for DSEF are set forth in Technical Reference GR-253-CORE, Issue 4.

© 2022 Frontier Communications Parent, Inc. All rights reserved.

20. Optical Networking (Cont'd)

20.4 Dedicated SONET Entrance Facilities (Cont'd)

(D) Terms and Conditions

(1) Deployment and Availability

(a) DSEF is provided where SONET facilities and bandwidth are available to provide the requested DSEF Interface. The Telephone Company will work cooperatively with the Customer in determining the availability of such facilities and if service can be provided.

(b) DSEF is available based on negotiated intervals, as described in Section 3.2.1 preceding.

(c) Regulations for moves or rearrangements of DS3s are described in Sections 5.6.4 and 5.6.1 preceding, respectively.

(2) Service Limitations

If the CDL is located in the same building as the SWC, the diversity between the SWC and the CDL may be limited by the physical paths available to connect the SWC and the CDL, and there may not be fiber diversity routed through an alternate wire center.

(3) Connection to Other Services

(a) Connection of DS3 Services to DSEF Terminations is provided by the Telephone Company. Interoffice mileage, when applicable, will apply at Special Transport rates, as set forth in Section 5.7.14 preceding, for the appropriate DS3 service being transported over the interoffice facilities

Asynchronous multiplexing of DS1s into a DS3 occurs outside the DSEF and all terms and rates as set forth in Section 5.7 preceding are applicable for such multiplexing.

(b) DSEF may also be connected to the following Telephone Company provided services, where such connections are technically and operationally feasible, as determined by the Telephone Company.

- ethernet private line service
- point-to-point SONET service

© 2022 Frontier Communications Parent, Inc. All rights reserved.

20. Optical Networking (Cont'd)

20.4 Dedicated SONET Entrance Facilities (Cont'd)

(D) Terms and Conditions (Cont'd)

(4) Space and Power

The Customer will be billed additional charges for any charges levied on the Telephone Company for space and power required to place equipment on the Telephone Company's side of the network interface.

(5) Conversions

Customers who wish to convert existing DS1 and lower bandwidth special access services to a DSEF may do so without termination liability as long as the total capacity of converted services at the CDL does not decrease. A new commitment period commences with the conversion and no credit is given for time-in-service on the new term plan. Applicable nonrecurring charges for installations will apply.

(E) Application of Rates and Charges

(1) Rate Structure

(a) DSEF Terminations

Monthly recurring charges (MRCs) apply for DSEF Terminations. The MRCs are differentiated by the term plan and DSEF Interface selected by the Customer. Nonrecurring charges apply for installations of DSEF Terminations.

Additionally, the MRCs for DSEF Terminations apply on a tapered schedule basis as set forth in (F) following. The rate to be billed for each DSEF Termination is based on the total number of DSEF Terminations that are in-service as of each billing date, on a per CDL basis, and per Billing Account Number (BAN) basis. To determine the total number of DSEF Terminations, the Telephone Company will count all DSEF Terminations and Telephone Company provided SONET entrance facilities provided in connection with a Telephone Company provided point-to-point SONET service or ethernet private line service that terminate at such CDL that are in service and billed under the same BAN.

For example, a Customer purchases five (5) DSEFs that are in-service at three (3) different CDLs, with the 5 DSEFs being billed under two (2) different BANs.

© 2022 Frontier Communications Parent, Inc. All rights reserved.

20. Optical Networking (Cont'd)

20.4 Dedicated SONET Entrance Facilities (Cont'd)

(E) Application of Rates and Charges (Cont'd)

(1) Rate Structure (Cont'd)

(a) DSEF Terminations (Cont'd)

(i) The first CDL has two (2) DSEFs, one with fifteen (15) in-service STS1 DSEF Terminations and the other with 5 in-service STS1 DSEF Terminations for a total of twenty (20) STS1 DSEF Terminations. Both DSEFs are under the same BAN. The rate to be billed for each DSEF Termination in the 2 DSEFs at the first CDL is the rate shown for 20 STS1 DSEF Terminations, as set forth in (F) following.

(ii) The second CDL has two (2) DSEFs, one with twenty (20) in-service STS1 DSEF Terminations and the other with twenty-two (22) in-service STS1 DSEF Terminations, for a total of forty-two (42) STS1 DSEF Terminations. The DSEFs at the second CDL are under separate BANs. The rate to be billed for each DSEF Termination in the first DSEF is the rate shown for 20 STS1 DSEF Terminations. The rate to be billed for each DSEF Termination in the second DSEF is the rate shown for 22 STS1 DSEF Terminations, as set forth in (F) following.

(iii) The third CDL has one (1) DSEF with nine (9) in-service STS1 DSEF Terminations on the same BAN. The rate to be billed for each DSEF Termination on the DSEF is the rate shown for 9 STS1 DSEF Terminations, as set forth in (F) following.

(b) DSEF Interfaces

MRCs for electrical DSEF Interfaces shall apply as set forth in (F)(2) following. When a customer orders an DSEF with a STS1 termination and an electrical interface, both the MRC for electrical DSEF interface (as set forth in (F)(2) following), and the MRC for STS1 Termination (as set forth in (F)(1) following) shall apply. The MRCs are differentiated by the term plan selected by the Customer. Nonrecurring charges apply for installations of electrical DSEF Interfaces, as set forth in (F)(3) following

© 2022 Frontier Communications Parent, Inc. All rights reserved.

20. Optical Networking (Cont'd)

20.4 Dedicated SONET Entrance Facilities (Cont'd)

(E) Application of Rates and Charges (Cont'd)

(2) Term Plans

DSEF is available for term plans of three (3) year and five (5) year commitment periods.

DSEF Services may be included in, and concurrently subscribed to, under the National Discount Plan as set forth in Section 23.1 following.

(3) Connection to Other Services

When a Customer connects a DSEF Termination to a DS3 service under a one (1) year commitment period, the DSEF Termination and Interface will be provided under a three (3) year commitment period.

When a Customer connects a DSEF Termination to a DS3 service under a three (3) year or five (5) year commitment period, the DSEF Termination and Interface will be provided under the same length commitment period.

When a Customer connects a DSEF Termination to a DS3 service under a seven (7) year commitment period, the DSEF Termination and Interface will be provided under a five (5) year commitment period.

(4) Expiration of Commitment Period

Upon expiration of the term plan, the Telephone Company will continue to provide DSEF on a month-to-month basis under the same rates, terms and conditions of the current term plan until the earliest to occur of: (a) the Customer cancels service or (b) a valid order for a new term plan is requested by the Customer.

© 2022 Frontier Communications Parent, Inc. All rights reserved.

20. Optical Networking (Cont'd)

20.4 Dedicated SONET Entrance Facilities (Cont'd)

(E) Application of Rates and Charges (Cont'd)

(5) Termination Liability

(a) A Customer must fulfill the term plan for each DSEF Termination and Interface, or be subject to termination liability for each DSEF Termination and Interface that was not in service for the entire commitment period. If a Customer disconnects service during the first year, termination liability will be calculated at one hundred percent (100%) of the MRCs for the unexpired portion of the first year, and at fifteen percent (15%) for the remainder of the term. If the disconnection takes place after the first year, termination liability is calculated at 15% of the MRCs for the remainder of the term.

(b) Termination liability will not apply to DSEF when:

- (i) Reserved For Future Use. (C)

(ii) a Customer changes its term plan to a longer commitment period and the CDL does not change.

© 2024 Frontier Communications Parent, Inc. All rights reserved.

20. Optical Networking (Cont'd)

20.4 Dedicated SONET Entrance Facilities (Cont'd)

(F) Rates and Charges

(1) DSEF Terminations

(Jurisdiction: California, Florida, and Texas)

(a) Per STS1/51.84 Mbps DSEF Termination
With a DS3 Electrical Interface
Per **Price Cap/N-MSA**

Special Switched	Monthly Rate 3 Year Term	Monthly Rate 5 Year Term
1	$2,150.00	$1,800.00
2	2,100.00	1,600.00
3	1,700.00	1,500.00
4	1,175.00	1,100.00
5	1,000.00	890.00
6	783.00	750.00
7	699.00	640.00
8	636.00	560.00
9	588.00	500.00
10	548.00	440.00
11	516.00	395.00
12	489.00	365.00
13	480.00	362.00
14	477.00	358.00
15	475.00	355.00
16	472.00	353.00
17	470.00	350.00
18	467.00	348.00
19	465.00	345.00
20	462.00	340.00
21	459.00	338.00
22	456.00	336.00
23	454.00	333.00
24	451.00	331.00

© 2022 Frontier Communications Parent, Inc. All rights reserved.

20. Optical Networking (Cont'd)

20.4 Dedicated SONET Entrance Facilities (Cont'd)

(F) Rates and Charges (Cont'd)

(1) DSEF Terminations (Cont'd)

(Jurisdiction: California, Florida, and Texas)

(a) Per STS1/51.84 Mbps DSEF Termination
With a DS3 Electrical Interface (Cont'd)
Per **Price Cap/N-MSA**

	Monthly Rate 3 Year Term	Monthly Rate 5 Year Term
Special Switched		
25	$449.00	$329.00
26	446.00	327.00
27	444.00	325.00
28	441.00	323.00
29	438.00	321.00
30	435.00	319.00
31	433.00	317.00
32	430.00	315.00
33	428.00	312.00
34	425.00	310.00
35	423.00	308.00
36	420.00	306.00
37	407.00	304.00
38	404.00	302.00
39	402.00	298.00
40	399.00	294.00
41	396.00	288.00
42	393.00	283.00
43	391.00	278.00
44	388.00	273.00
45	386.00	267.00
46	383.00	262.00
47	381.00	257.00
48 and up	378.00	252.00

© 2022 Frontier Communications Parent, Inc. All rights reserved.

20. Optical Networking (Cont'd)

20.4 Dedicated SONET Entrance Facilities (Cont'd)

(F) Rates and Charges (Cont'd)

(1) DSEF Terminations (Cont'd)

(Jurisdiction: California, Florida, and Texas)

(a) Per STS1/51.84 Mbps DSEF Termination
With a DS3 Electrical Interface (Cont'd)
Per **Price Band A, Price Band B, and Price Band C**

	Monthly Rate 3 Year Term	Monthly Rate 5 Year Term
Special Switched		
1	$2,150.00	$1,800.00
2	2,100.00	1,600.00
3	1,700.00	1,500.00
4	1,175.00	1,100.00
5	1,000.00	890.00
6	783.00	750.00
7	699.00	640.00
8	636.00	560.00
9	588.00	500.00
10	548.00	440.00
11	516.00	395.00
12	489.00	365.00
13	480.00	362.00
14	477.00	358.00
15	475.00	355.00
16	472.00	353.00
17	470.00	350.00
18	467.00	348.00
19	465.00	345.00
20	462.00	340.00
21	459.00	338.00
22	456.00	336.00
23	454.00	333.00
24	451.00	331.00

© 2022 Frontier Communications Parent, Inc. All rights reserved.

20. Optical Networking (Cont'd)

20.4 Dedicated SONET Entrance Facilities (Cont'd)

(F) Rates and Charges (Cont'd)

(1) DSEF Terminations (Cont'd)

(Jurisdiction: California, Florida, and Texas)

(a) Per STS1/51.84 Mbps DSEF Termination
With a DS3 Electrical Interface (Cont'd)
Per **Price Band A, Price Band B, and Price Band C**

Special Switched	Monthly Rate 3 Year Term	Monthly Rate 5 Year Term
25	$449.00	$329.00
26	446.00	327.00
27	444.00	325.00
28	441.00	323.00
29	438.00	321.00
30	435.00	319.00
31	433.00	317.00
32	430.00	315.00
33	428.00	312.00
34	425.00	310.00
35	423.00	308.00
36	420.00	306.00
37	407.00	304.00
38	404.00	302.00
39	402.00	298.00
40	399.00	294.00
41	396.00	288.00
42	393.00	283.00
43	391.00	278.00
44	388.00	273.00
45	386.00	267.00
46	383.00	262.00
47	381.00	257.00
48 and up	378.00	252.00

© 2022 Frontier Communications Parent, Inc. All rights reserved.

20. Optical Networking (Cont'd)

20.4 Dedicated SONET Entrance Facilities (Cont'd)

(F) Rates and Charges (Cont'd)

(1) DSEF Terminations (Cont'd)

(Jurisdiction: California, Florida, and Texas)

(b) Per STS1/51.84 Mbps DSEF Termination
With an OC3 Optical Interface
Per **Price Cap/N-MSA**

	Monthly Rate 3 Year Term	Monthly Rate 5 Year Term
Special Switched		
1	$2,310.00	$1,905.00
2	2,260.00	1,705.00
3	1,860.00	1,605.00
4	1,335.00	1,205.00
5	1,175.00	855.00
6	971.00	690.00
7	891.00	633.00
8	831.00	590.00
9	785.00	557.00
10	747.00	530.00
11	717.00	508.00
12	691.00	490.00
13	683.00	488.00
14	680.00	486.00
15	678.00	484.00
16	675.00	482.00
17	673.00	480.00
18	670.00	478.00
19	668.00	476.00
20	665.00	474.00
21	663.00	472.00
22	660.00	470.00
23	658.00	468.00
24	655.00	466.00

© 2022 Frontier Communications Parent, Inc. All rights reserved.

20. Optical Networking (Cont'd)

20.4 Dedicated SONET Entrance Facilities (Cont'd)

(F) Rates and Charges (Cont'd)

(1) DSEF Terminations (Cont'd)

(Jurisdiction: California, Florida, and Texas)

(b) Per STS1/51.84 Mbps DSEF Termination
With an OC3 Optical Interface (Cont'd)
Per **Price Cap/N-MSA**

	Monthly Rate 3 Year Term	Monthly Rate 5 Year Term
Special Switched		
25	$653.00	$464.00
26	650.00	462.00
27	648.00	460.00
28	645.00	458.00
29	643.00	456.00
30	640.00	454.00
31	638.00	452.00
32	635.00	450.00
33	633.00	448.00
34	630.00	446.00
35	628.00	444.00
36	625.00	442.00
37	613.00	440.00
38	610.00	438.00
39	608.00	434.00
40	605.00	430.00
41	603.00	425.00
42	600.00	420.00
43	598.00	415.00
44	595.00	410.00
45	593.00	405.00
46	590.00	400.00
47	588.00	395.00
48 and up	585.00	390.00

© 2022 Frontier Communications Parent, Inc. All rights reserved.

20. Optical Networking (Cont'd)

20.4 Dedicated SONET Entrance Facilities (Cont'd)

(F) Rates and Charges (Cont'd)

(1) DSEF Terminations (Cont'd)

(Jurisdiction: California, Florida, and Texas)

(b) Per STS1/51.84 Mbps DSEF Termination
With an OC3 Optical Interface (Cont'd)
Per **Price Band A, Price Band B, and Price Band C**

	Monthly Rate 3 Year Term	Monthly Rate 5 Year Term
Special Switched		
1	$2,310.00	$1,905.00
2	2,260.00	1,705.00
3	1,860.00	1,605.00
4	1,335.00	1,205.00
5	1,175.00	855.00
6	971.00	690.00
7	891.00	633.00
8	831.00	590.00
9	785.00	557.00
10	747.00	530.00
11	717.00	508.00
12	691.00	490.00
13	683.00	488.00
14	680.00	486.00
15	678.00	484.00
16	675.00	482.00
17	673.00	480.00
18	670.00	478.00
19	668.00	476.00
20	665.00	474.00
21	663.00	472.00
22	660.00	470.00
23	658.00	468.00
24	655.00	466.00

© 2022 Frontier Communications Parent, Inc. All rights reserved.

20. Optical Networking (Cont'd)

20.4 Dedicated SONET Entrance Facilities (Cont'd)

(F) Rates and Charges (Cont'd)

(1) DSEF Terminations (Cont'd)

(Jurisdiction: California, Florida, and Texas)

(b) Per STS1/51.84 Mbps DSEF Termination
With an OC3 Optical Interface (Cont'd)
Per **Price Band A, Price Band B, and Price Band C**

	Monthly Rate 3 Year Term	Monthly Rate 5 Year Term
Special Switched		
25	$653.00	$464.00
26	650.00	462.00
27	648.00	460.00
28	645.00	458.00
29	643.00	456.00
30	640.00	454.00
31	638.00	452.00
32	635.00	450.00
33	633.00	448.00
34	630.00	446.00
35	628.00	444.00
36	625.00	442.00
37	613.00	440.00
38	610.00	438.00
39	608.00	434.00
40	605.00	430.00
41	603.00	425.00
42	600.00	420.00
43	598.00	415.00
44	595.00	410.00
45	593.00	405.00
46	590.00	400.00
47	588.00	395.00
48 and up	585.00	390.00

© 2022 Frontier Communications Parent, Inc. All rights reserved.

20. Optical Networking (Cont'd)

20.4 Dedicated SONET Entrance Facilities (Cont'd)

(F) Rates and Charges (Cont'd)

(1) DSEF Terminations (Cont'd)

(Jurisdiction: California, Florida, and Texas)

(c) Per STS1/51.84 Mbps DSEF Termination
With an OC12 Optical Interface
Per **Price Cap/N-MSA**

	Monthly Rate 3 Year Term	Monthly Rate 5 Year Term
Special Switched		
1	$2,310.00	$1,905.00
2	2,260.00	1,705.00
3	1,860.00	1,605.00
4	1,335.00	1,205.00
5	1,175.00	970.00
6	896.00	855.00
7	816.00	745.00
8	756.00	665.00
9	710.00	605.00
10	672.00	545.00
11	642.00	500.00
12	616.00	470.00
13	608.00	465.00
14	605.00	455.00
15	603.00	450.00
16	600.00	445.00
17	598.00	440.00
18	595.00	435.00
19	593.00	430.00
20	590.00	424.00
21	588.00	422.00
22	585.00	420.00
23	583.00	418.00
24	580.00	416.00

© 2022 Frontier Communications Parent, Inc. All rights reserved.

20. Optical Networking (Cont'd)

20.4 Dedicated SONET Entrance Facilities (Cont'd)

(F) Rates and Charges (Cont'd)

(1) DSEF Terminations (Cont'd)

(Jurisdiction: California, Florida, and Texas)

(c) Per STS1/51.84 Mbps DSEF Termination
With an OC12 Optical Interface (Cont'd)
Per **Price Cap/N-MSA**

	Monthly Rate 3 Year Term	Monthly Rate 5 Year Term
Special Switched		
25	$578.00	$414.00
26	575.00	412.00
27	573.00	410.00
28	570.00	408.00
29	568.00	406.00
30	565.00	404.00
31	563.00	402.00
32	560.00	400.00
33	558.00	398.00
34	555.00	396.00
35	553.00	394.00
36	550.00	392.00
37	538.00	390.00
38	535.00	388.00
39	533.00	384.00
40	530.00	380.00
41	528.00	375.00
42	525.00	370.00
43	523.00	365.00
44	520.00	360.00
45	518.00	355.00
46	515.00	350.00
47	513.00	345.00
48 and up	510.00	340.00

© 2022 Frontier Communications Parent, Inc. All rights reserved.

20. Optical Networking (Cont'd)

20.4 Dedicated SONET Entrance Facilities (Cont'd)

(F) Rates and Charges (Cont'd)

(1) DSEF Terminations (Cont'd)

(Jurisdiction: California, Florida, and Texas)

(c) Per STS1/51.84 Mbps DSEF Termination
With an OC12 Optical Interface (Cont'd)
Per **Price Band A, Price Band B, and Price Band C**

	Monthly Rate 3 Year Term	Monthly Rate 5 Year Term
Special Switched		
1	$2,310.00	$1,905.00
2	2,260.00	1,705.00
3	1,860.00	1,605.00
4	1,335.00	1,205.00
5	1,175.00	970.00
6	896.00	855.00
7	816.00	745.00
8	756.00	665.00
9	710.00	605.00
10	672.00	545.00
11	642.00	500.00
12	616.00	470.00
13	608.00	465.00
14	605.00	455.00
15	603.00	450.00
16	600.00	445.00
17	598.00	440.00
18	595.00	435.00
19	593.00	430.00
20	590.00	424.00
21	588.00	422.00
22	585.00	420.00
23	583.00	418.00
24	580.00	416.00

© 2022 Frontier Communications Parent, Inc. All rights reserved.

20. Optical Networking (Cont'd)

20.4 Dedicated SONET Entrance Facilities (Cont'd)

(F) Rates and Charges (Cont'd)

(1) DSEF Terminations (Cont'd)

(Jurisdiction: California, Florida, and Texas)

(c) Per STS1/51.84 Mbps DSEF Termination
With an OC12 Optical Interface (Cont'd)
Per **Price Band A, Price Band B, and Price Band C**

	Monthly Rate 3 Year Term	Monthly Rate 5 Year Term
Special Switched		
25	$578.00	$414.00
26	575.00	412.00
27	573.00	410.00
28	570.00	408.00
29	568.00	406.00
30	565.00	404.00
31	563.00	402.00
32	560.00	400.00
33	558.00	398.00
34	555.00	396.00
35	553.00	394.00
36	550.00	392.00
37	538.00	390.00
38	535.00	388.00
39	533.00	384.00
40	530.00	380.00
41	528.00	375.00
42	525.00	370.00
43	523.00	365.00
44	520.00	360.00
45	518.00	355.00
46	515.00	350.00
47	513.00	345.00
48 and up	510.00	340.00

© 2022 Frontier Communications Parent, Inc. All rights reserved.

20. Optical Networking (Cont'd)

20.4 Dedicated SONET Entrance Facilities (Cont'd)

(F) Rates and Charges (Cont'd)

(1) DSEF Terminations (Cont'd)

(Jurisdiction: California, Florida, and Texas)

(d) Per STS1/51.84 Mbps DSEF Termination
With an OC48 Optical Interface
Per **Price Cap/N-MSA**

Special Switched	Monthly Rate 3 Year Term	Monthly Rate 5 Year Term
1	$6,288.00	$4,488.00
2	3,144.00	2,244.00
3	2,096.00	1,496.00
4	1,572.00	1,122.00
5	1,258.00	898.00
6	1,048.00	748.00
7	898.00	641.00
8	786.00	561.00
9	699.00	499.00
10	629.00	449.00
11	572.00	408.00
12	524.00	343.33
13	517.00	342.41
14	515.00	340.58
15	513.00	338.74
16	510.00	337.82
17	509.00	335.99
18	506.00	334.15
19	505.00	333.23
20	502.00	331.40
21	500.00	329.56
22	498.00	327.73
23	496.00	326.81
24	493.00	324.97

© 2022 Frontier Communications Parent, Inc. All rights reserved.

20. Optical Networking (Cont'd)

20.4 Dedicated SONET Entrance Facilities (Cont'd)

(F) Rates and Charges (Cont'd)

(1) DSEF Terminations (Cont'd)

(Jurisdiction: California, Florida, and Texas)

(d) Per STS1/51.84 Mbps DSEF Termination
With an OC48 Optical Interface (Cont'd)
Per **Price Cap/N-MSA**

	Monthly Rate 3 Year Term	Monthly Rate 5 Year Term
Special Switched		
25	$492.00	$323.14
26	489.00	322.22
27	488.00	320.38
28	485.00	318.55
29	483.00	317.63
30	481.00	315.79
31	479.00	313.96
32	476.00	312.12
33	475.00	311.20
34	472.00	309.37
35	471.00	307.53
36	468.00	306.61
37	458.00	304.78
38	455.00	302.94
39	454.00	300.19
40	451.00	296.51
41	449.00	292.84
42	447.00	289.17
43	445.00	285.50
44	442.00	280.91
45	441.00	277.24
46	438.00	273.56
47	437.00	269.89
48 and up	434.00	265.30

© 2022 Frontier Communications Parent, Inc. All rights reserved.

20. Optical Networking (Cont'd)

20.4 Dedicated SONET Entrance Facilities (Cont'd)

(F) Rates and Charges (Cont'd)

(1) DSEF Terminations (Cont'd)

(Jurisdiction: California, Florida, and Texas)

(d) Per STS1/51.84 Mbps DSEF Termination
With an OC48 Optical Interface (Cont'd)
Per **Price Band A, Price Band B, and Price Band C**

	Monthly Rate 3 Year Term	Monthly Rate 5 Year Term
Special Switched		
1	$6,288.00	$4,488.00
2	3,144.00	2,244.00
3	2,096.00	1,496.00
4	1,572.00	1,122.00
5	1,258.00	898.00
6	1,048.00	748.00
7	898.00	641.00
8	786.00	561.00
9	699.00	499.00
10	629.00	449.00
11	572.00	408.00
12	524.00	343.33
13	517.00	342.41
14	515.00	340.58
15	513.00	338.74
16	510.00	337.82
17	509.00	335.99
18	506.00	334.15
19	505.00	333.23
20	502.00	331.40
21	500.00	329.56
22	498.00	327.73
23	496.00	326.81
24	493.00	324.97

© 2022 Frontier Communications Parent, Inc. All rights reserved.

20. Optical Networking (Cont'd)

20.4 Dedicated SONET Entrance Facilities (Cont'd)

(F) Rates and Charges (Cont'd)

(1) DSEF Terminations (Cont'd)

(Jurisdiction: California, Florida, and Texas)

(d) Per STS1/51.84 Mbps DSEF Termination
With an OC48 Optical Interface (Cont'd)
Per **Price Band A, Price Band B, and Price Band C**

	Monthly Rate 3 Year Term	Monthly Rate 5 Year Term
Special Switched		
25	$492.00	$323.14
26	489.00	322.22
27	488.00	320.38
28	485.00	318.55
29	483.00	317.63
30	481.00	315.79
31	479.00	313.96
32	476.00	312.12
33	475.00	311.20
34	472.00	309.37
35	471.00	307.53
36	468.00	306.61
37	458.00	304.78
38	455.00	302.94
39	454.00	300.19
40	451.00	296.51
41	449.00	292.84
42	447.00	289.17
43	445.00	285.50
44	442.00	280.91
45	441.00	277.24
46	438.00	273.56
47	437.00	269.89
48 and up	434.00	265.30

© 2022 Frontier Communications Parent, Inc. All rights reserved.

20. Optical Networking (Cont'd)

20.4 Dedicated SONET Entrance Facilities (Cont'd)

(F) Rates and Charges (Cont'd)

(2) Electrical DSEF Terminations

(a) DS3 Interface Monthly Recurring Charge

(Jurisdiction: California, Florida, and Texas)

	3-Year Term	
Price Cap/N-MSA	$157.00	(C)
Price Band A	157.00	
Price Band B	157.00	
Price Band C	157.00	

	5-Year Term	
Price Cap/N-MSA	$105.00	(C)
Price Band A	105.00	
Price Band B	105.00	
Price Band C	105.00	

© 2022 Frontier Communications Parent, Inc. All rights reserved.

20. Optical Networking (Cont'd)

20.4 Dedicated SONET Entrance Facilities (Cont'd)

(F) Rates and Charges (Cont'd)

(3) Installation Charges

(a) Per DSEF Termination

(Jurisdiction: California, Florida, and Texas)

	Nonrecurring Charge	
STS1 w/ separate Interface		
Price Cap/N-MSA	$1.00	(C)
Price Band A	1.00	
Price Band B	1.00	
Price Band C	1.00	

(b) Per electrical DSEF Interface

(Jurisdiction: California, Florida, and Texas)

	3-Year Term Nonrecurring Charge	
Per electrical DSEF Interface - DS3		
Price Cap/N-MSA	$1.00	(C)
Price Band A	1.00	
Price Band B	1.00	
Price Band C	1.00	

	5-Year Term Nonrecurring Charge	
Per electrical DSEF Interface - DS3		
Price Cap/N-MSA	$1.00	(C)
Price Band A	1.00	
Price Band B	1.00	
Price Band C	1.00	

© 2022 Frontier Communications Parent, Inc. All rights reserved.

FACILITIES FOR INTERSTATE ACCESS

21: RESERVED FOR FUTURE USE (Z)

© 2022 Frontier Communications Parent, Inc. All rights reserved.

22. Operating Territories of the Frontier Telephone Companies (Z)

22.1 General

The operating territory of Frontier Telephone Companies is comprised of the operating territories of Frontier California Inc., Frontier Florida LLC, and Frontier Southwest Incorporated.

© 2022 Frontier Communications Parent, Inc. All rights reserved.

22. Operating Territories of the Frontier Telephone Companies (Cont'd)

22.2 Operating Territory of Frontier California Inc.

The operating territory of Frontier California Inc., defined by the names of rate centers, is comprised of the following locations for California.

(A) Operating Territory of California – (2319)

Anza
Arrowhead
Azusa
Badger
Baldwin Park
Banning
Beaumont
Calimesa
Camarillo
Carpinteria
Chino
Claremont
Covina
Crestlin
Desert Center
Desert Hot Springs
Diamond Bar
Downey
Dunlap
El Rio
Elsinore
Etiwanda
Fowler
Glendor
Grant Grove
Granada Hills
Guadalupe
Hemet
Homeland
Homestead Valley
Huntington Beach
Idyllwild
Indio
Joshua Tree
La Habra
La Puente
Laguna Beach
Lake Hughes
Lancaster
Lindsay
Lompoc
Malibu
Mentone
Miramonte
Monrovia
Morongo Valley
Morgan Hill
Mugu
Murrieta
Newbury Park
Norwalk
Novato
Ontario
Ontariox
Pacoima
Palm Desert
Palm Springs
Perris
Pico Rivera
Pinyon
Playa Del Rey
Pomona
Redlands
Redondo Beach
Reedley
Salton City
San Bernardino
San Dimas
San Fernando
San Jacinto
Santa Barbara
Santa Maria
Santa Monica
Santa Paula
Sepulveda
Sierra Madre
Squaw Valley
Sun City
Sunland
Temecula
Thousand Oaks
Twentynine Palms
Upland
West Los Angeles
Westminister
Whittier
Yucca Valley

© 2022 Frontier Communications Parent, Inc. All rights reserved.

22. Operating Territories of the Frontier Telephone Companies (Cont'd)

22.3 Operating Territory of Frontier Florida LLC

The operating territory of Frontier Florida LLC, defined by the names of rate centers, is comprised of the following locations for Florida.

(A) Operating Territory of Florida – (0328)

Bartow
Bradenton
Clearwater
Englewood
Frostproof
Haines City
Hudson
Indian Lake
Lake Wales
Lakeland
Mulberry
Myakka
New Port Richey
North Port
Palmetto
Plant City
Polk City
St. Petersburg
Tampa
Tarpon Springs
Venice
Winter Haven
Zephyrhills

© 2022 Frontier Communications Parent, Inc. All rights reserved.

22. Operating Territories of the Frontier Telephone Companies (Cont'd)

22.4 Operating Territory of Frontier Southwest Incorporated

The operating territory of Frontier Southwest Incorporated, defined by the names of rate centers, is comprised of the following locations for Texas.

(A) Operating Territory of Texas – (4344)

Agua Dulce
Aransas Pass
Arcola
Argyle
Azle
Bacliff
Ballinger
Bangs
Barnhart
Bartonville
Baytown
Beach City
Ben Wheeler
Big Lake
Bishop
Blanco
Blanket
Blessing
Blooming Grove
Bloomington-Placedo
Boerne
Bonham
Brady
Bronte
Brownwood
Bryan
Buda
Caldwell
Canton
Carlsbad
Carrollton
Charlotte
Christoval
Coleman
Collinsville
Comanche
Crosby
Dallas Fort Worth
Deanville
Del Rio
Denton
Dickinson
Dilley
Dime Box
Dripping Springs
East Bernard
Ector
Eden
Eldorado
Falfurrias
Fredericksburg
Frost
Garland
George West
Georgetown
Giddings
Gilmer
Gladewater
Goldthwaite
Gonzales
Gordonville
Grand Saline
Granger
Granite Shoals
Grapevine
Gunter
Gustine
Hallsville
Henderson
Highlands
Hitchcock – Santa Fe
Howe
Huffman
Ingleside
Irving
Jackson
Jacksonville
Jarrell
Johnson City
Jourdanton
Junction
Justin
Keller
Kemah
Kilgore
Kingsland
Kurten
Kyle
La Feria
La Grange
Lavernia

© 2022 Frontier Communications Parent, Inc. All rights reserved.

22. Operating Territories of the Frontier Telephone Companies (Cont'd)

22.4 Operating Territory of Frontier Southwest Incorporated (Cont'd)

(A) Operating Territory of Texas – (4344) (Cont'd)

Lake Brownwood
League City
Leonard
Lewisville
Lexington
Llano-West Llano
London
Lyford
Marble Falls
Mason
Menard
Mertzon
Miles
Mont Belvieu
Mount Vernon
Myrtle Springs
New Summerfield
New Waverly
Nixon
Northrup
Oakland
Odem
Orange Grove
Ozona
Paint Rock
Palacios
Pilot Point
Plano
Point Comfort
Port Lavaca
Port O'Connor
Portland – Gregory

Premont
Quitman
Raymondville
Rio Grande City
Robert Lee
Robstown
Roma
Rosharon
Round Mountain
Rowena
Rowlett
Rusk
San Angelo
San Gabriel
Santa Fe
Santa Rosa
Schulenburg
Seadrift
Shepherd
Sherman
Smiley
Snook – Tunis
Somerset
Somerville
Sonora
Stafford
Sterling City
Stonewall
Sulphur Springs
Taft
Texarkana
Thorndale - Thrall
Three Rivers
Tioga
Tivoli-Austwell
Tow
Trenton
Trinity
Turnertown
Van
Van Alstyne
Vanderbilt
Wallis
Water Valley
Weimar
Weslaco
Whitesboro
Willis
Willow City
Wimberley
Winfield
Winnsboro
Winters
Wylie
Zephyr

© 2022 Frontier Communications Parent, Inc. All rights reserved.

23. Discount Plans

23.1 National Discount Plan # (Z)

The following discount plans are available to all customers who purchase the applicable services and meet the requirements for each such discount plan, as set forth in Section 23.1 following for National Discount Plan.

23.1.1 General

(A) Overview

The National Discount Plan (NDP) is an optional discount plan that allows the NDP Customer to aggregate all of its Qualifying Services on a national basis. The NDP provides discounts on certain rate elements of Qualifying Services. The level of discount received by the NDP Customer corresponds to the NDP Customer's quantities of Qualifying Services, the customer's selection of a Commitment Matrix Option, and the Plan Year.

(B) Specific Terms and References

Unless otherwise defined in this tariff, the following terms are used in this Section 23.1. References to other sections of Section 23.1 are provided for further information on each term.

(1) Achieved Discount Tier: shall mean the Discount Tier (as determined in the Annual True-Up) that the NDP Customer could have achieved during the Annual True-Up Period.

(2) ACNA: shall mean Access Customer Name Abbreviation, as such term is generally understood in the Telecommunications Industry to be the name abbreviation for a purchaser of Special Access Services and Facilities for Interstate Access.

(3) Actual Increase: shall mean a measurement used in calculating the CBB Discount, that measures the difference between (i) the number of Equivalent DS1 CTs or Equivalent DS1 CMs (as applicable) in month one (1) of the Annual True-Up Period; and (ii) the number of Equivalent DS1 CTs or Equivalent DS1 CMs (as applicable) in month twelve (12) of the Annual True-Up Period.

(4) Anniversary Date: shall mean each twelve (12) month anniversary of the NDP Start Date during the Term.

Effective June 1, 2019, the National Discount Plan (NDP) is no longer permitted. NDP customers subscribed as of June 1, 2019 may continue with their existing subscriptions but will not be eligible to extend, renew, reenroll in, convert to a new NDP period, or in any other way continue their existing plan beyond its currently scheduled expiration. If at any time an existing customer terminates its NDP, the customer may not re-subscribe to the plan. (C)

© 2022 Frontier Communications Parent, Inc. All rights reserved.

23. Discount Plans (Cont'd)

23.1 National Discount Plan # (Cont'd)

23.1.1 General (Cont'd)

(B) Specific Terms and References (Cont'd)

(5) Annual True-Up: shall mean the true-up conducted by the Telephone Company following the end of each Plan Year during which the Telephone Company shall measure, among other things, whether the NDP Customer has met and/or exceeded the Commitment Level and the Discount Tier for the Annual True-Up Period, as more specifically described in Section 23.1.7 following. A Final True-Up shall be conducted in accordance with Section 23.1.14(B)(1) following.

(6) Annual True-Up Period: shall mean the most recent Plan Year that has just been completed for which the Annual True-Up is being conducted.

(7) Assigned Discount Tier: shall mean the applicable Discount Tier that was in effect during an Annual True-Up Period.

(8) Average Monthly Rate Per Equivalent DS1 CM: shall mean the rate as calculated in accordance with Section 23.1.7(C)(2) following.

(9) Average Monthly Rate Per Equivalent DS1 CT: shall mean the rate as calculated in accordance with in Section 23.1.7(C)(1) following.

(10) Channel Termination(s): shall mean the applicable Special Access Lines (SAL(s)) for Qualifying Services (as used in the Telephone Company's Tariff FCC No. 14 (FCC14)), and the applicable Circuit Terminations for Qualifying Services (as used in this tariff) as follows:

(a) Channel Terminations for Special Access DS1 Services are described in Section 5.3.6 of FCC14, and Section 7.11.1 preceding of this tariff; and

(b) Channel Terminations for Special Access DS3 Services using electrical and optical interfaces are described in Section 5.3.6 preceding of FCC14 and Section 7.11.1 of this tariff; and

(c)

(d)

(e) Channel Terminations for DSEF Services.

Service availability is limited. See # footnote on Page 23-1.

© 2022 Frontier Communications Parent, Inc. All rights reserved.

23. Discount Plans (Cont'd)

23.1 National Discount Plan # (Cont'd)

23.1.1 General (Cont'd)

(B) Specific Terms and References (Cont'd)

(11) Channel Mileage: shall mean the applicable Special Transport for Qualifying Services (as used in this FCC 14), and the applicable Circuit Mileage for Qualifying Services (as used in this tariff) as follows.

(a) Channel Mileage for Special Access DS1 Services and Special Access DS3 Services are described in Section 5.3.6 preceding of FCC14, and Section 7.11.1 of this tariff.

(b)

(12) Commitment Buy Up Bonus: shall mean an option available to the NDP Customer which allows the NDP Customer to increase (buy-up) their CT Commitment Level and/or their CM Commitment Level, and receive a discount one or both Commitment Levels, as described in Section 23.1.7(E) following.

(13) CBB Discount: shall mean the Commitment Buy-Up Bonus Discount as described in Section 23.1.7(E) following.

(14) Commitment Level: shall mean the CM Commitment Level (i.e., the total number of Equivalent DS1 CMs) and/or the CT Commitment Level (i.e., the total number of Equivalent DS1 CTs) that the NDP Customer must commit to the NDP, as described further in Section 23.1.4 following. If the NDP Customer has Channel Terminations and Channel Mileage, then the NDP Customer must establish a separate Commitment Level for Channel Terminations (CT Commitment Level) and a separate Commitment Level for Channel Mileage (CM Commitment Level).

(15) Commitment Matrix: shall mean the Premier Commitment Matrix, the Standard Commitment Matrix or the Deluxe Commitment Matrix, as each is described in Section 23.1.4(C) following.

Service availability is limited. See # footnote on Page 23-1.

© 2022 Frontier Communications Parent, Inc. All rights reserved.

23. Discount Plans (Cont'd)

23.1 National Discount Plan # (Cont'd)

23.1.1 General (Cont'd)

(B) Specific Terms and References (Cont'd)

(16) Discount Tier: shall mean the tier in each of the tables set forth in Section 23.1.4(B) following into which the NDP Customer falls based on the actual quantities of Equivalent DS1 CTs or Equivalent DS1 CMs, as applicable.

(17) Discount Tier Adjustment: shall mean the adjustment (if applicable) to a higher or a lower Discount Tier based on the difference (if any) between the NDP Customer's Achieved Discount Tier and Assigned Discount Tier, as calculated during the Annual True-Up Period. See Section 23.1.7(D) following for further explanation.

(18) Discounted Rate Elements: shall mean those rate elements of the Qualifying Services that receive a discount under the NDP. A listing of the Discounted Rate Elements is set forth in Section 23.1.5(A) following.

(19) Equivalent DS1 CTs: shall mean the total number of equivalent DS1 Channel Terminations for Qualifying Services as determined in accordance with Section 23.1.4 following.

(20) Equivalent DS1 CMs: shall mean the total number of equivalent DS1 Channel Miles for Qualifying Services as determined in accordance with Section 23.1.4 following.

(21)

(23) DSEF Services: shall mean, as applicable, either (a) Special Access Dedicated SONET Entrance Facilities STS1 terminations (excluding interface options) as described in Section 20.4 preceding of FCC14, and Section 20.4 of this tariff; or (b) Telephone Company provided SONET entrance facility STS1 terminations (excluding interface options) provided by the Telephone Company where such service is technically and operationally feasible, as determined by the Telephone Company.

(23) Initial Term: shall mean the five (5) year initial term of the NDP.

Service availability is limited. See # footnote on Page 23-1.

© 2022 Frontier Communications Parent, Inc. All rights reserved.

23. Discount Plans (Cont'd)

23.1 National Discount Plan # (Cont'd)

23.1.1 General (Cont'd)

(B) Specific Terms and References (Cont'd)

(24) Monthly Average Count of Equivalent DS1 CMs: shall mean the average number of Equivalent DS1 CMs that were in-service during each month of the Annual True-Up Period, as calculated in accordance with Section 23.1.7(B)(1) following.

(25) Monthly Average Count of Equivalent DS1 CTs: shall mean the average number of Equivalent DS1 CTs that were in-service during each month of the Annual True-Up Period, as calculated in accordance with Section 23.1.7(B)(1) following.

(26) Monthly Charges: shall mean the dollar amount of monthly recurring charges billed by the Telephone Company for Discounted Rate Elements.

(27) Monthly Shortage: shall mean the difference between (i) the Monthly Average Count of Equivalent DS1 CTs or Monthly Average Count of Equivalent DS1 CMs, as applicable; and (ii) the NDP Customer's CT Commitment Level or CM Commitment Level, respectively.

(28) NDP Customer: shall mean collectively the subscribing customer (as defined in Section 2.6 preceding) and all Persons that are included in the same NDP.

(29) NDP Start Date: shall mean the start date of the NDP Customer's NDP as described in Section 23.1.2(A)(1) following.

(30) Non-Discounted Billed Amounts: shall mean the Monthly Charges for the Discounted Rate Elements that would have been billed if the discount percentages of the NDP had not been applied, as calculated in accordance with Section 23.1.7(D) following.

Service availability is limited. See # footnote on Page 23-1.

© 2022 Frontier Communications Parent, Inc. All rights reserved.

23. Discount Plans (Cont'd)

23.1 National Discount Plan # (Cont'd)

23.1.1 General (Cont'd)

(B) Specific Terms and References (Cont'd)

(31) Person: shall mean any individual, corporation, association, partnership (general or limited), joint venture, trust, estate, limited liability company, or other legal entity or organization.

(32) Plan Year: shall mean each 12 month period during the Term of the NDP commencing on the NDP Start Date and each Anniversary Date thereafter, as applicable.

(33) Qualifying Services: shall mean Special Access DS1 Services, Special Access DS3 Services, and DSEF Services provided by the Telephone Company to the NDP Customer as more specifically described in Section 23.1.3 following of this tariff, and Section 23.1.3 of FCC14.

(34) Renewal Term: shall mean any renewed 5-year period of the NDP.

(35) Sale Adjustment: shall mean an adjusted amount of Equivalent DS1 CTs and an adjusted amount of Equivalent DS1 CMs which are no longer provided to the NDP Customer as a result of a Telephone Company Sale.

(36) Shortfall Penalty: shall mean a penalty assessed against the NDP Customer when it fails to meet its CT Commitment Level and/or CM Commitment Level, as applicable, as further described in Section 23.1.7(C) following.

(37) Special Access DS3 Service: shall mean Special Access DS3 High Capacity Service as described in Section 7.11 of this tariff, and Special Access High Capacity Digital DS3 Service as described in Section 5.3.6(E) of FCC14.

Service availability is limited. See # footnote on Page 23-1.

© 2022 Frontier Communications Parent, Inc. All rights reserved.

23. Discount Plans (Cont'd)

23.1 National Discount Plan # (Cont'd)

23.1.1 General (Cont'd)

(B) Specific Terms and References (Cont'd)

(38) Special Access DS1 Service: shall mean Special Access DS1 High Capacity Service as described in Section 7.11 of this tariff and Special Access High Capacity Digital DS1 Service as described in Section 5.3.6(A) of FCC14.

(39) Subscription Date: shall mean the date that the Telephone Company receives an executed and completed subscription document from the NDP Customer as described in Section 23.1.2(A) following.

(40) Telephone Company Sale: shall mean the sale or other divestiture of an operating territory or a portion of an operating territory of a Telephone Company, whereby the Telephone Company no longer provides Qualifying Services in such operating territory or portion of an operating territory.

(41) Term: shall mean the Initial Term, and any Renewal Term(s).

(42) Upgrade or Upgraded: shall mean the replacement of (i) a Qualifying Service with a Qualifying Service of a higher bandwidth or capacity (e.g., replacement of a Special Access DS3 Service with an IEF Service); or (ii) a Qualifying Service with another Telephone Company provided service of a higher bandwidth or capacity that is not a Qualifying Service (e.g., replacement of a Special Access DS3 Service with an Ethernet Service of a higher bandwidth).

(43) Upgrade Adjustment: shall mean an adjusted number of Equivalent DS1 CTs and an adjusted number of Equivalent DS1 CMs that were Upgraded by the NDP Customer during the Annual True-Up Period.

Service availability is limited. See # footnote on Page 23-1.

© 2022 Frontier Communications Parent, Inc. All rights reserved.

23. Discount Plans (Cont'd)

23.1 National Discount Plan # (Cont'd)

23.1.1 General (Cont'd)

(C) ACNAs Subscribing to NDP

When an ACNA is included in the NDP, the subscribing customer must specify which Qualifying Services within that ACNA are to be included in the NDP.

(1) At the time of subscription to NDP, the subscribing customer must include all of its ACNAs in the NDP. The NDP Customer also has the option to include the ACNA(s) of one or more Person(s) in its NDP (subject to written authorization from the NDP Customer and the applicable Person(s)). In this case, the NDP Customer's NDP shall include (1) all of the subscribing customer's ACNA(s); and (ii) all of the ACNA(s) of the Person(s) that the subscribing customer wishes to include in its NDP (subject to written authorization from the NDP Customer and the applicable Person(s)).

(2) If, subsequent to the NDP Start Date, the NDP Customer wishes to add one or more ACNA(s) to its NDP for one of the following reasons, then all such ACNA(s) of the NDP Customer or Person(s), as applicable, shall be added to the NDP Customer's NDP at the time of the next Annual True-Up, in accordance with the terms set forth in Section 23.1.11 following.

(a) NDP Customer (at its option) wishes to include one or more Person(s) into its NDP that are not currently included in the NDP Customer's NDP (subject to written authorization from the NDP Customer and the applicable Person(s)); or

(b) NDP Customer or one of the Person(s) who is currently included in the NDP has acquired one or more new ACNA(s); or

(c) NDP Customer has acquired one or more ACNA(s) through merger, acquisition, or other transaction that are not currently included in the NDP Customer's NDP.

(3) No later than thirty calendar (30) days prior to each Anniversary Date, the NDP Customer must provide written notice to the Telephone Company indicating its intent to add such ACNA(s) to the NDP, and setting forth the affected ACNA(s) and the name of the Person (if applicable) who owns such ACNA(s).

Service availability is limited. See # footnote on Page 23-1.

© 2022 Frontier Communications Parent, Inc. All rights reserved.

23. Discount Plans (Cont'd)

23.1 National Discount Plan # (Cont'd)

23.1.1 General (Cont'd)

(C) ACNAs Subscribing to NDP

(4) Once an ACNA is included in the NDP, it cannot concurrently be included in any other NDP. Combination or addition of ACNAs are further described in Section 23.1.11 following.

(5) For example, assume that a customer who has only one ACNA (ABC) subscribes to the NDP. Assume further that such NDP Customer has five (5) affiliates, but only wishes to include three (3) affiliates in its NDP as of the NDP Start Date. Assume also that each of the three (3) included affiliates each have one ACNA respectively (ACNAs LLL, MMM, and NNN, respectively). In this case, a single NDP will be established for the NDP Customer that includes the following ACNAs: ABC, LLL, MMM, and NNN. Assume further that during Plan Year 2, the NDP Customer decides to include its remaining two (2) affiliates in its NDP. Then, in accordance with this Section 23.1.1 and Section 23.1.11 following, the NDP Customer will include all of the ACNAs of such affiliates into the NDP.

Service availability is limited. See # footnote on Page 23-1.

© 2022 Frontier Communications Parent, Inc. All rights reserved.

23. Discount Plans (Cont'd)

23.1 National Discount Plan # (Cont'd)

23.1.1 General (Cont'd)

(D) Subscription to Other Tariff Arrangements

(1) At any time during the Term of the NDP, the NDP Customer may not simultaneously subscribe the same Qualifying Services to the NDP and to other existing or new tariff arrangements (including a contract tariff option as set forth in FCC14), an individual case basis arrangement, specialized service arrangement (or the like), or other discount plan, such as DS1 Term Pricing Plans (as set forth in Section 7 preceding) under this tariff.

Service availability is limited. See # footnote on Page 23-1.

© 2022 Frontier Communications Parent, Inc. All rights reserved.

23. Discount Plans (Cont'd)

23.1 National Discount Plan # (Cont'd)

23.1.2 Subscription

(A) Subscription Requirements

The NDP Customer's request for subscription to the NDP must be in writing, must be signed by an authorized representative of the NDP Customer, and must be in a manner prescribed by the Telephone Company. In addition, the written request must include all of the following:

(1) NDP Start Date

Notwithstanding a different Subscription Date, the NDP shall start on one of the following dates as determined below:

(a) If the NDP Customer's Subscription Date to NDP is on or before the fifteenth (15th) calendar day of a month, the NDP Start Date shall be the first (1st) calendar day of the month following the Subscription Date. Application of discounts under the NDP shall begin with the first calendar day in the month following the Subscription Date. For example, assume the NDP Customer's Subscription Date to NDP is July 6th. Then, the NDP Start Date is August 1 and discounts under the NDP shall begin on August 1st.

(b) If the NDP Customer's Subscription Date to NDP is after the 15th calendar day of a month, the NDP Start Date shall be the 1st calendar day of the second calendar month following the Subscription Date. Application of discounts under the NDP shall begin with the first calendar day in the second month following the Subscription Date. For example, assume the NDP Customer's Subscription Date to NDP is July 17th. Then, the NDP Start Date is September 1st and discounts under the NDP shall begin on September 1st.

Service availability is limited. See # footnote on Page 23-1.

© 2022 Frontier Communications Parent, Inc. All rights reserved.

23. Discount Plans (Cont'd)

23.1 National Discount Plan # (Cont'd)

23.1.2 Subscription (Cont'd)

(A) Subscription Requirements (Cont'd)

(2) Actual Quantities of Channel Terminations and Channel Mileage for Qualifying Services

The Telephone Company shall calculate the actual quantities of Channel Terminations and Channel Mileage during the month prior to the Subscription Date, based on the Qualifying Services the Customer chooses to include in the NDP. In accordance with Section 23.1.4 following, the Telephone Company shall derive the Equivalent DS1 CTs and the Equivalent DS1 CMs from the actual in-plan quantities of Channel Terminations and Channel Mileage.

(3) Discount Tier

Based on the Equivalent DS1 CTs and Equivalent DS1 CMs determined in (2) above, the Telephone Company will determine the Discount Tier that the NDP Customer falls into in each of the applicable tables set forth in Section 23.1.4(B) following.

(4) Commitment Matrix and Commitment Levels

The NDP Customer must specify a Commitment Level by selecting from one of the following three (3) Commitment Matrix options: (1) Premier Commitment Matrix, as described in Section 23.1.4(C)(1) following; and (2) Standard Commitment Matrix, as described in Section 23.1.4(C)(2) following; and (3) Deluxe Commitment Matrix, as described in 23.1.4(C)(3) following. The NDP Customer's choice of the Commitment Matrix determines (a) the number of Equivalent DS1 CTs and/or Equivalent DS1 CMs that the NDP Customer must commit to the NDP; and (b) the discount on Discounted Rate Elements provided under the NDP.

Service availability is limited. See # footnote on Page 23-1.

© 2022 Frontier Communications Parent, Inc. All rights reserved.

23. Discount Plans (Cont'd)

23.1 National Discount Plan # (Cont'd)

23.1.3 Qualifying Services (Cont'd)

(A) Inclusion of Qualifying Services in NDP

The Qualifying Services are included in the NDP for purposes of determining the Equivalent DS1 CTs and Equivalent DS1 CMs.

(1) If the NDP Customer purchases one or more of the Qualifying Services under this tariff, and/or under FCC14, and subscribes to the NDP, the NDP Customer's NDP may include any or all of the Qualifying Services set forth in (B) following that are purchased under such affected tariffs. For each Qualifying Service, the NDP Customer must indicate whether the service is to be included in the NDP.

(2) The NDP will be administered as a single discount plan across all such tariffs for which a single set of Commitment Levels, Discount Tiers, and Term shall apply.

Service availability is limited. See # footnote on Page 23-1.

© 2022 Frontier Communications Parent, Inc. All rights reserved.

23. Discount Plans (Cont'd)

23.1 National Discount Plan # (Cont'd)

23.1.3 Qualifying Services (Cont'd)

(B) Qualifying Services

Subject to the terms of Section 23.1.1(D) preceding, the applicable Qualifying Services provided by the Telephone Company to the NDP Customer pursuant to this tariff and FCC14 may be included in the NDP at the time of subscription to NDP and, as applicable, at any time during the Term when the NDP Customer purchases additional quantities of such Qualifying Services.

(1) Special Access DS1 Service Channel Terminations (see Note 1);

(2) Special Access DS3 Service Channel Terminations (including Individual System, 3 System, and Unlimited System configurations in this tariff and FCC14, and 12 Capacity System configurations in this tariff) (see Note 2);

(3) Special Access DS1 Service Channel Mileage (see Notes 1 and 3);

(4) Special Access DS3 Service Channel Mileage (including Individual System, 3 System, and Unlimited System configurations in FCC14, and Individual System, 3 Capacity System, 12 Capacity System and Unlimited System configurations in this tariff);

(5) DSEF STS1 Channel Terminations;

Note 1: High Capacity Digital FT1 Facilities in this tariff and FCC14 are not Qualifying Services.
Note 2: Channel Terminations and Channel Mileage for 12 and 24 Group System configurations in this tariff are not Qualifying Services.
Note 3: The MetroLAN Optional Arrangement in this tariff and FCC14 is not a Qualifying Service.

Service availability is limited. See # footnote on Page 23-1.

© 2022 Frontier Communications Parent, Inc. All rights reserved.

23. Discount Plans (Cont'd)

23.1 National Discount Plan # (Cont'd)

23.1.3 Qualifying Services (Cont'd)

(C) Shared Use Arrangements

For Qualifying Services that are provided as part of a Shared Use Arrangement as set forth in Section 7.2.5 preceding, the Special Access DS3 Service or Special Access DS1 Service will be included in the NDP. The Switched Access Portion for such services of the Shared Use Arrangement will not be included in the NDP or be subject to discounting under the NDP.

(D) Conversion of Qualifying Services

Upon subscription to NDP, all of the NDP Customer may cancel any of its individual circuit-specific term plans for Special Access DS3 Service and Special Access DS1 Service such as DS1 and DS3 term plans as offered under Section 7 preceding, to include all such services in the NDP. Minimum period charges as set forth in Section 7 preceding will not apply to such cancellations. The same Qualifying service may not be included in both NDP and an individual circuit-specific plan.

Additionally, all of the NDP Customer must remove any Qualifying Services it chooses to include in the NDP from its DS1 Term Payment Plan(s) (TPP(s)) offered under Section 7.2.1(G) preceding. If the customer chooses to include all Qualifying Services in a TPP in the NDP, the TPP must be cancelled in order to include all such Special Access DS1 Services in the NDP. Shortfall charges as set forth in Section 7.2.1(G) preceding will not apply to such cancellations. The same Qualifying service may not be included in both NDP and a DS1 TPP.

Further, the NDP Customer may cancel individual circuit-specific term plans and remove Qualifying Services from non-circuit-specific term plans for Special Access DS3 Service and Special Access DS1 Service, such as DS1 Term Volume Plans (TVPs), Eight and Ten Year DS1 Term Volume Plans (ETTVPs), and DS3 Term Volume Plans (DS3 TVPs) as offered under FCC14. The same Qualifying Service may not be included in both NDP and another discount plan.

Service availability is limited. See # footnote on Page 23-1.

© 2022 Frontier Communications Parent, Inc. All rights reserved.

23. Discount Plans (Cont'd)

23.1 National Discount Plan # (Cont'd)

23.1.3 Qualifying Services (Cont'd)

(E) Addition of Services and Removal of Services

(1) Addition of Services

(a) The NDP Customer may add Special Access DS3 Service and Special Access DS1 Service at any time during the Term of the NDP. Qualifying Services are added to the NDP for the remainder of the Term (i.e., on a coterminous basis).

(b) When the NDP Customer adds one or more DSEF Services during the Term of the NDP, the added DSEF Service will be added to the NDP solely for the purpose of calculating the number of Equivalent DS1 CTs and/or the number of Equivalent DS1 CMs used to administer the NDP.

(2) Removal of Services

(a) When the NDP Customer removes one or more Special Access DS3 Services or Special Access DS1 Services, but not all Special Access DS3 Services and Special Access DS1 Services, from NDP at any time during the Term, no termination liability charge applies.

(b) When the NDP Customer removes one or more DSEF Services during the Term of the NDP, no termination liability under this Section 23.1 applies. However, the NDP Customer may be subject to termination liability under its applicable term plan for DSEF Service.

(c) When the NDP Customer removes all Special Access DS3 Services and all Special Access DS1 Services from the NDP (i.e., the NDP Customer cancels its NDP in its entirety), termination liability applies in accordance with Section 23.1.13 following.

Service availability is limited. See # footnote on Page 23-1.

© 2022 Frontier Communications Parent, Inc. All rights reserved.

23. Discount Plans (Cont'd)

23.1 National Discount Plan # (Cont'd)

23.1.4 Commitment Levels and Discount Tiers

(A) Calculation of Equivalent DS1 CTs and Equivalent DS1 CMs

In order to establish Commitment Levels and Discount Tiers, Equivalent DS1 CTs and Equivalent DS1 CMs must be determined. Based on the actual quantities of Channel Terminations and Channel Mileage included in the NDP, the Telephone Company will calculate the Equivalent DS1 CTs and Equivalent DS1 CMs.

(1) The Equivalent DS1 CTs shall be calculated as follows:

(Step 1) Determine the actual quantity of Channel Terminations for each Qualifying Service across this tariff and FCC14, as applicable.

(Step 2) Multiply the actual quantity of Channel Terminations for such Qualifying Service by 100% if the Qualifying Service is Special Access DS1 Service, Special Access DS3 Services, or a DSEF Service

(Step 3) Using Table 1, below, multiply (a) the applicable number in the column entitled “DS1 CT Multiplier” below; by (b) the number derived in Step 2 above.

(Step 4) Repeat the process in Steps (1) through (3) for each Qualifying Service.

(Step 5) Add the product of all of the equivalent Channel Terminations for all of the Qualifying Services derived in Steps (1) through (4) above.

Table 1: Calculation of Equivalent DSI CTs.

Qualifying Service	DS1 CT Multiplier
STS1 level	28
DS3 level	28
DS1 level	1

Service availability is limited. See # footnote on Page 23-1.

© 2022 Frontier Communications Parent, Inc. All rights reserved.

23. Discount Plans (Cont'd)

23.1 National Discount Plan # (Cont'd)

23.1.4 Commitment Levels and Discount Tiers (Cont'd)

(A) Calculation of Equivalent DS1 CTs and Equivalent DS1 CMs (Cont'd)

(2) The Equivalent DS1 CMs shall be calculated as follows:

(Step 1) Determine the actual quantity of Channel Mileage for each Qualifying Service across this tariff and FCC14, as applicable.

(Step 2) Multiply the actual quantity of Channel Mileage for such Qualifying Service by 100% if the Qualifying Service is a Special Access DS1 Service or a Special Access DS3 Service.

(Step 3) Using Table 2, below, multiply (a) the applicable number in the column entitled “DS1 CM Multiplier” below; by (b) the number derived in Step 2 above.

(Step 4) Repeat the process in Steps (1) through (3) for each Qualifying Service.

(Step 5) Add the product of all of the equivalent Channel Mileage for all of the Qualifying Services derived in Steps (1) through (4) above.

Table 2: Equivalent DSI CMs.

Qualifying Service	DS1 CM Multiplier
STS1 level	N/A
DS3 level	28
DS1 level	1

Service availability is limited. See # footnote on Page 23-1.

© 2022 Frontier Communications Parent, Inc. All rights reserved.

23. Discount Plans (Cont'd)

23.1 National Discount Plan # (Cont'd)

23.1.4 Commitment Levels and Discount Tiers (Cont'd)

(A) Calculation of Equivalent DS1 CTs and Equivalent DS1 CMs (Cont'd)

(2) (Cont'd)

As an example of the above, assume that the NDP Customer has Channel Terminations in the following quantities:

- 200 DSEF STS1 Channel Terminations
- 800 DS3 Channel Terminations
- 3,000 DS1 Channel Terminations

The Equivalent DS1 CTs would be determined as follows:

Channel Termination		DS1 CT Multiplier		Equivalent DS1 CTs
200 DSEF STS1s	X	28	=	5,600
800 DS3 CTs	X	28	=	23,400
3000 DS1 CTs	X	1	=	3,000
Total Equivalent DS1 CTs			=	31,000

Further assume that NDP Customer has Channel Mileage in the following quantities:

- 5,000 DS3 Channel Miles
- 75,000 DS1 Channel Miles

The Equivalent DS1 CMs would be determined as follows:

Channel Mileage		DS1 CM Multiplier		Equivalent DS1 CMs
5,000 DS3 CMs	X	28	=	140,000
75,000 DS1 CMs	X	1	=	75,000

Service availability is limited. See # footnote on Page 23-1.

© 2022 Frontier Communications Parent, Inc. All rights reserved.

23. Discount Plans (Cont'd)

23.1 National Discount Plan # (Cont'd)

23.1.4 Commitment Levels and Discount Tiers (Cont'd)

(B) Discount Tier Tables

(1) The Equivalent DS1 CTs calculated in (A) preceding determine the Discount Tier into which the NDP Customer falls pursuant to the table below:

Equivalent DS1 CTs	Discount Tier
0 – 30,000	A
30,001 – 60,000	B
60,001 - 120,000	C
120,001 - 195,000	D
195,001 - 275,000	E
275,001 - 350,000	F
350,001 - 420,000	G
420,001 - 485,000	H
485,001 - 550,000	I
550,001 or more	J

The Discount Tier determines the discount percentage (as set forth in Section 23.1.5(B) following) to be applied to the Channel Termination and multiplexer Discounted Rate Elements. The Discount Tier determined at the NDP Start Date will remain in effect for each Plan Year of the NDP, unless otherwise adjusted at the Annual True-Up in accordance with Section 23.1.7 following.

Service availability is limited. See # footnote on Page 23-1.

© 2022 Frontier Communications Parent, Inc. All rights reserved.

23. Discount Plans (Cont'd)

23.1 National Discount Plan # (Cont'd)

23.1.4 Commitment Levels and Discount Tiers (Cont'd)

(B) Discount Tier Tables (Cont'd)

(2) The Equivalent DS1 CMs calculated in (A) preceding determine the Discount Tier into which the NDP Customer falls pursuant to the table below:

Equivalent DS1 CMs	Discount Tier
0 – 125,000	A
125,001 - 250,000	B
250,001 - 500,000	C
500,001 - 950,000	D
950,001 - 1,550,000	E
1,550,001 - 2,150,000	F
2,150,001 - 2,850,000	G
2,850,001 - 3,450,000	H
3,450,001 - 3,850,000	I
3,850,001 or more	J

The Discount Tier determines the discount percentage (as set forth in Section 23.1.5(B) following) to be applied to the Channel Mileage Discounted Rate Elements. The Discount Tier determined at the NDP Start Date will remain in effect for each Plan Year of the NDP, unless otherwise adjusted at the Annual True-Up in accordance with Section 23.1.7 following.

Service availability is limited. See # footnote on Page 23-1.

© 2022 Frontier Communications Parent, Inc. All rights reserved.

23. Discount Plans (Cont'd)

23.1 National Discount Plan # (Cont'd)

23.1.4 Commitment Levels and Discount Tiers (Cont'd)

(C) As of the Subscription Date, and at the beginning of any Renewal Term (unless the NDP Customer chooses the Renewal Benefit Option as described in Section 23.1.14(C) following), the NDP Customer must specify a Commitment Matrix by selecting from one of the following three (3) Commitment Matrix options. The NDP Customer's selection of the Commitment Matrix option shall apply to both the CT Commitment Level and to the CM Commitment Level. The NDP Customer may not select a different Commitment Matrix for the CT Commitment Level and a different Commitment Matrix for the CM Commitment Level.

(i) Premier Commitment Matrix, as described in Section (C)(1) following;

(ii) Standard Commitment Matrix, as described in Section (C)(2) following; and

(iii) Deluxe Commitment Matrix, as described in Section (C)(3) following.

The NDP Customer's choice of the Commitment Matrix determines (a) the number of Equivalent DS1 CMs and/or Equivalent DS1 CTs (as calculated in Section 23.1.4(A) preceding) that the NDP Customer must commit to the NDP; and (b) the discount on Discounted Rate Elements provided under the NDP.

(1) If Premier Commitment Matrix is selected by the NDP Customer, the Telephone Company will establish the CT Commitment Level by multiplying the total number of Equivalent DS1 CTs (as calculated in accordance with Section 23.1.4(A) preceding) by 90%, and the CM Commitment Level by multiplying the total number of Equivalent DS1 CMs (as calculated in accordance with Section 23.1.4(A) preceding) by 90%. If the NDP Customer chooses the Premier Commitment Matrix, the NDP Customer shall receive the applicable discounts set forth in the table in Section 23.1.5(B)(2) following.

Service availability is limited. See # footnote on Page 23-1.

© 2022 Frontier Communications Parent, Inc. All rights reserved.

23. Discount Plans (Cont'd)

23.1 National Discount Plan # (Cont'd)

23.1.4 Commitment Levels and Discount Tiers (Cont'd)

(C) (Cont'd)

(2) If Standard Commitment Matrix is selected by the NDP Customer, the Telephone Company will establish the CT Commitment Level by multiplying the total number of Equivalent DS1 CTs (as calculated in accordance with Section 23.1.4(A) preceding) by 85%, and the CM Commitment Level by multiplying the total number of Equivalent DS1 CMs (as calculated in accordance with Section 23.1.4(A) preceding) by 85%. If the NDP Customer chooses the Standard Commitment Matrix, the NDP Customer shall receive the applicable discounts set forth in the table in Section 23.1.5(B)(1) following.

(3) If Deluxe Commitment Matrix is selected by the NDP Customer, the Telephone Company will establish the CT Commitment Level by multiplying the total number of Equivalent DS1 CTs (as calculated in accordance with Section 23.1.4(A) preceding) by 92%, and the CM Commitment Level by multiplying the total number of Equivalent DS1 CMs (as calculated in accordance with Section 23.1.4(A) preceding) by 92%. If the NDP Customer chooses the Deluxe Commitment Matrix, the NDP Customer shall receive the applicable discounts set forth in the table in Section 23.1.5(B)(3) following.

(4) Where the calculation in ((1), (2) or (3) preceding results in a fraction of an Equivalent DS1 CT or a fraction of an Equivalent DS1 CM, standard rounding practices shall apply. For example, if there are 9,999.4 Equivalent DS1 CTs, the Telephone Company will round down to 9,999 whole Equivalent DS1 CTs. Similarly, if there are 9,999.5 Equivalent DS1 CTs, the Telephone Company will round up to 10,000 whole Channel Terminations.

Service availability is limited. See # footnote on Page 23-1.

© 2022 Frontier Communications Parent, Inc. All rights reserved.

23. Discount Plans (Cont'd)

23.1 National Discount Plan # (Cont'd)

23.1.4 Commitment Levels and Discount Tiers (Cont'd)

(C) (Cont'd)

(5) As an example, assume that at the time of subscription to the NDP, the NDP Customer had 31,020.04 Equivalent DS1 CTs, and 215,125.17 Equivalent DS1 CMs. In this case, the NDP Customer would fall into Discount Tier B for Channel Terminations and Discount Tier B for Channel Mileage. Assume further that the NDP Customer chose the Standard Commitment Matrix. Using the table in Section 23.1.5(B)(1) following, in Plan Year 1, the NDP Customer would receive a discount of 33% (i.e., Discount Tier B) on its Special Access DS1 Channel Terminations, and 31% (i.e., Discount Tier B) on its Special Access DS3 Channel Mileage. The Telephone Company would also establish a Commitment Level for Channel Terminations at 26,367 (i.e., 85% multiplied by 31,020.04, with the result rounded down), and a Commitment Level for Channel Mileage at 182,856 (i.e., 85% multiplied by 215,125.17, with the result rounded down).

(6) Changes to the Commitment Matrix

(a) Changes during an Initial Term or a Renewal Term, as applicable.

If the NDP Customer has selected the Premier Commitment Matrix at the beginning of the Initial Term or the Renewal Term, as applicable, the NDP Customer may not change such Commitment Matrix during the Initial Term, or during a Renewal Term, as applicable. If the NDP Customer has selected either the Standard Commitment Matrix or the Deluxe Commitment Matrix at the beginning of the Initial Term or the Renewal Term, as applicable, the NDP Customer may, at its option, change its Commitment Matrix selection to Premier Commitment Matrix at an Annual True-Up as set forth in Section 23.1.7(G) following.

(b) Changes at the end of an Initial Term or a Renewal Term, as applicable.

At the end of the Initial Term or any Renewal Term, as applicable, an NDP Customer that renews its NDP is permitted to pick a different Commitment Matrix for the Renewal Term, so long as such NDP Customer does not also concurrently select the Renewal Benefit Option as set forth in Section 23.1.14(C) following.

Service availability is limited. See # footnote on Page 23-1.

© 2022 Frontier Communications Parent, Inc. All rights reserved.

23. Discount Plans (Cont'd)

23.1 National Discount Plan # (Cont'd)

23.1.4 Commitment Levels and Discount Tiers (Cont'd)

(D) Although DSEF Services are used in determining the DS1 Equivalent CTs, rate elements for DSEF Services are not Discounted Rate Elements (i.e., rate elements for such services are not discounted under NDP).

(E) The initial Commitment Level(s) established as of the NDP Start Date, or upon renewal of the NDP, as applicable, will not change during the Term of the NDP, unless one of the following is in effect:

(1) If the NDP Customer's count of Equivalent DS1 CTs and/or count of Equivalent DS1 CMs exceeds one hundred sixty percent (160%) of the applicable Commitment Level in effect for the then applicable Annual True-Up Period, as described in Section 23.1.7 following, in which case, the Commitment Level(s) will be adjusted in accordance with Section 23.1.7(B)(2)(b) following; or

(2) The NDP Customer is permitted to change its Commitment Matrix as set forth in Section 23.1.4(C)(5) preceding; or

(3) The NDP Customer elects to exercise the Commitment Buy-Up Bonus Option as described in Section 23.1.7(E) following; or

(4) If the NDP Customer adds or removes an ACNA, then Commitment Levels will be adjusted in accordance with Section 23.1.11 following or Section 23.1.12 following, respectively.

Service availability is limited. See # footnote on Page 23-1.

© 2022 Frontier Communications Parent, Inc. All rights reserved.

23. Discount Plans (Cont'd)

23.1 National Discount Plan # (Cont'd)

23.1.5 Application of Discount

(A) Discounted Rate Elements

The discounts provided under the NDP shall only be provided on Qualifying Services that the customer chooses to include in the NDP, and only on the following Discounted Rate Elements:

(1)

(2)

Service availability is limited. See # footnote on Page 23-1.

© 2022 Frontier Communications Parent, Inc. All rights reserved.

23. Discount Plans (Cont'd)

23.1 National Discount Plan # (Cont'd)

23.1.5 Application of Discount

(A) Discounted Rate Elements (Cont'd)

(3) The following Discounted Rate Elements from FCC14 may be included in NDP:

(a) Special Access High Capacity DS1 (1.544 Mbps) Facilities - SAL rate elements of a Standard Arrangement as specified in Section 5.7.7 preceding, as determined in accordance with Section 19.1 of FCC 14 (see Note 1).

(b) Special Access High Capacity DS1 (1.544 Mbps) Facilities - Special Transport Facility and Termination rate elements of a Standard Arrangement as specified in Section 5.7.7(A) of FCC 14, as determined in accordance with Section 19.1 of FCC14 (see Notes 1 & 2).

(c) Special Access High Capacity DS3 (44.736 Mbps) Facilities - SAL rate elements of an Individual System or a 3 System configuration (with or without Telephone Company electronics) as specified in Sections 5.7.10 and 5.7.12 of FCC14, respectively, as determined in accordance with Section 19.1 of FCC14 (see Note 3).

(d) Special Access High Capacity DS3 (44.736 Mbps) Facilities - Banded Special Transport rate elements of an Individual System, a 3 System, or an Unlimited System configuration as set forth in Section 5.7.14(C) of FCC14.

(e) Special Access High Capacity DS3 (44.736 Mbps) Facilities - Special Transport Facilities (as set forth in Section 5.7.14(A) of FCC14) and 44.736 Mbps Terminations (as set forth in Section 5.7.14(B) of FCC14) of an Individual System, a 3 Group System or an Unlimited System configuration preceding, as determined in accordance with Section 19.1 of FCC14 (see Note 4).

Note 1: All rate elements of High Capacity Digital FT1 Facilities are not Discounted Rate Elements.
Note 2: All Special Transport rate elements of the MetroLAN Optional Arrangement are not Discounted Rate Elements.
Note 3: All SAL rate elements of an Unlimited System, a 12 Group System, or a 24 Group System are not Discounted Rate Elements.
Note 4: All Special Transport rate elements of a 12 Group System, or a 24 Group System are not Discounted Rate Elements.

Service availability is limited. See # footnote on Page 23-1.

© 2022 Frontier Communications Parent, Inc. All rights reserved.

23. Discount Plans (Cont'd)

23.1 National Discount Plan # (Cont'd)

23.1.5 Application of Discount

(A) Discounted Rate Elements (Cont'd)

(4) The following Discounted Rate Elements from this tariff may be included in NDP:

(a) Special Access High Capacity DS1 Service – Circuit Termination rate elements as specified in Section 7.5.11(A) preceding (see Note 1).

(b) Special Access High Capacity DS1 Service – Fixed and Per Mile Circuit Mileage rate elements as specified in Section 7.11.5(G) preceding (see Notes 1 and 2).

(c) Special Access High Capacity DS3 Service - Circuit Termination rate elements of an Individual System or a 3 Capacity System configuration (with or without Telephone Company electronics) as specified Section 7.11.5(E) preceding (see Note 3).

(d) Special Access High Capacity DS3 Service - Banded Circuit Mileage rate elements of an Individual System, an Unlimited System, a 3 Capacity System or a 12 Capacity System configuration as specified in Section 7.11.5(J) preceding.

(e) Special Access High Capacity DS3 Service - Fixed and Per Mile Circuit Mileage rate elements of an Individual System, an Unlimited System, a 3 Capacity System or a 12 Capacity System configuration as specified in Section 7.11.5(J) preceding.

Note 1: All rate elements of High Capacity Digital FT1 Facilities are not Discounted Rate Elements.
Note 2: All Circuit Mileage rate elements of the MetroLAN Optional Arrangement are not Discounted Rate Elements.
Note 3: All Circuit Termination rate elements of an Unlimited System, a 12 Group System, or a 24 Group System are not Discounted Rate Elements.

Service availability is limited. See # footnote on Page 23-1.

© 2022 Frontier Communications Parent, Inc. All rights reserved.

23. Discount Plans (Cont'd)

23.1 National Discount Plan # (Cont'd)

23.1.5 Application of Discount (Cont'd)

(B) The percentage of the discount applied to the Discounted Rate Elements set forth below during the Term is determined by the Discount Tier, NDP Customer's selection of the Standard Commitment Matrix, the Premier Commitment Matrix, or the Deluxe Commitment Matrix, and the Plan Year. Discount Tiers may change at an Annual True-Up as set forth in Section 23.1.7 following (e.g., Discount Tier may change at an Annual True-Up).

(1) Standard Commitment Level Discount Percentages & Plan Year

Tier	Year 1	Year 2	Year 3	Year 4	Year 5
Discount Tier A					
DS1 CT	45.50%	45.75%	45.85%	45.95%	46.05%
DS3 CT	14.50%	14.75%	14.85%	14.95%	15.05%
DS1 CM	0.00%	0.00%	0.00%	0.00%	0.00%
DS3 CM	0.00%	0.25%	0.35%	0.45%	0.55%
Discount Tier B					
DS1 CT	47.00%	47.25%	47.35%	47.45%	47.55%
DS3 CT	17.00%	17.25%	17.35%	17.45%	17.55%
DS1 CM	0.00%	0.00%	0.10%	0.20%	0.30%
DS3 CM	0.25%	0.50%	0.60%	0.70%	0.80%
Discount Tier C					
DS1 CT	48.50%	48.75%	48.85%	48.95%	49.05%
DS3 CT	19.00%	19.25%	19.35%	19.45%	19.55%
DS1 CM	0.25%	0.50%	0.60%	0.70%	0.80%
DS3 CM	0.50%	0.75%	0.85%	0.95%	1.05%

Service availability is limited. See # footnote on Page 23-1.

© 2022 Frontier Communications Parent, Inc. All rights reserved.

23. Discount Plans (Cont'd)

23.1 National Discount Plan # (Cont'd)

23.1.5 Application of Discount (Cont'd)

(B) (Cont'd)

(1) Standard Commitment Level Discount Percentages & Plan Year (Cont'd)

Tier	Year 1	Year 2	Year 3	Year 4	Year 5
Discount Tier D					
DS1 CT	49.50%	49.75%	49.85%	49.95%	50.05%
DS3 CT	21.00%	21.25%	21.35%	21.45%	21.55%
DS1 CM	0.75%	1.00%	1.10%	1.20%	1.30%
DS3 CM	0.75%	1.00%	1.10%	1.20%	1.30%
Discount Tier E					
DS1 CT	50.00%	50.25%	50.35%	50.45%	50.55%
DS3 CT	23.00%	23.25%	23.35%	23.45%	23.55%
DS1 CM	1.00%	1.25%	1.35%	1.45%	1.55%
DS3 CM	1.00%	1.25%	1.35%	1.45%	1.55%
Discount Tier F					
DS1 CT	50.50%	50.75%	50.85%	50.95%	51.05%
DS3 CT	23.00%	23.25%	23.35%	23.45%	23.55%
DS1 CM	1.25%	1.50%	1.60%	1.70%	1.80%
DS3 CM	1.25%	1.50%	1.60%	1.70%	1.80%
Discount Tier G					
DS1 CT	51.00%	51.25%	51.35%	51.45%	51.55%
DS3 CT	23.50%	23.75%	23.85%	23.95%	24.05%
DS1 CM	1.50%	1.75%	1.85%	1.95%	2.05%
DS3 CM	1.50%	1.75%	1.85%	1.95%	2.05%

Service availability is limited. See # footnote on Page 23-1.

© 2022 Frontier Communications Parent, Inc. All rights reserved.

23. Discount Plans (Cont'd)

23.1 National Discount Plan # (Cont'd)

23.1.5 Application of Discount (Cont'd)

(B) (Cont'd)

(1) Standard Commitment Level Discount Percentages & Plan Year (Cont'd)

Tier	Year 1	Year 2	Year 3	Year 4	Year 5
Discount Tier H					
DS1 CT	51.50%	51.75%	51.85%	51.95%	52.05%
DS3 CT	24.00%	24.25%	24.35%	24.45%	24.55%
DS1 CM	1.75%	2.00%	2.10%	2.20%	2.30%
DS3 CM	1.75%	2.00%	2.10%	2.20%	2.30%
Discount Tier I					
DS1 CT	52.00%	52.25%	52.35%	52.45%	52.55%
DS3 CT	24.50%	24.75%	24.85%	24.95%	25.05%
DS1 CM	2.00%	2.25%	2.35%	2.45%	2.55%
DS3 CM	2.00%	2.25%	2.35%	2.45%	2.55%
Discount Tier J					
DS1 CT	52.50%	52.75%	52.85%	52.95%	53.05%
DS3 CT	25.00%	25.25%	25.35%	25.45%	25.55%
DS1 CM	2.25%	2.50%	2.60%	2.70%	2.80%
DS3 CM	2.25%	2.50%	2.60%	2.70%	2.80%

Service availability is limited. See # footnote on Page 23-1.

© 2022 Frontier Communications Parent, Inc. All rights reserved.

23. Discount Plans (Cont'd)

23.1 National Discount Plan # (Cont'd)

23.1.5 Application of Discount (Cont'd)

(B) (Cont'd)

(2) Premier Commitment Level Discount Percentages & Plan Year

Tier	Year 1	Year 2	Year 3	Year 4	Year 5
Discount Tier A					
DS1 CT	46.50%	46.75%	46.85%	46.95%	47.05%
DS3 CT	15.50%	15.75%	15.85%	15.95%	16.05%
DS1 CM	0.25%	0.50%	0.60%	0.70%	0.80%
DS3 CM	1.00%	1.25%	1.35%	1.45%	1.55%
Discount Tier B					
DS1 CT	48.00%	48.25%	48.35%	48.45%	48.55%
DS3 CT	18.00%	18.25%	18.35%	18.45%	18.55%
DS1 CM	0.75%	1.00%	1.10%	1.20%	1.30%
DS3 CM	1.25%	1.50%	1.60%	1.70%	1.80%
Discount Tier C					
DS1 CT	49.50%	49.75%	49.85%	49.95%	50.05%
DS3 CT	20.00%	20.25%	20.35%	20.45%	20.55%
DS1 CM	1.25%	1.50%	1.60%	1.70%	1.80%
DS3 CM	1.50%	1.75%	1.85%	1.95%	2.05%

Service availability is limited. See # footnote on Page 23-1.

© 2022 Frontier Communications Parent, Inc. All rights reserved.

23. Discount Plans (Cont'd)

23.1 National Discount Plan # (Cont'd)

23.1.5 Application of Discount (Cont'd)

(B) (Cont'd)

(2) Premier Commitment Level Discount Percentages & Plan Year (Cont'd)

Tier	Year 1	Year 2	Year 3	Year 4	Year 5
Discount Tier D					
DS1 CT	50.50%	50.75%	50.85%	50.95%	51.05%
DS3 CT	23.00%	23.25%	23.35%	23.45%	23.55%
DS1 CM	1.75%	2.00%	2.10%	2.20%	2.30%
DS3 CM	1.75%	2.00%	2.10%	2.20%	2.30%
Discount Tier E					
DS1 CT	51.00%	51.25%	51.35%	51.45%	51.55%
DS3 CT	23.00%	23.25%	23.35%	23.45%	23.55%
DS1 CM	2.00%	2.25%	2.35%	2.45%	2.55%
DS3 CM	2.00%	2.25%	2.35%	2.45%	2.55%
Discount Tier F					
DS1 CT	51.50%	51.75%	51.85%	51.95%	52.05%
DS3 CT	24.00%	24.25%	24.35%	24.45%	24.55%
DS1 CM	2.25%	2.50%	2.60%	2.70%	2.80%
DS3 CM	2.25%	2.50%	2.60%	2.70%	2.80%
Discount Tier G					
DS1 CT	52.00%	52.25%	52.35%	52.45%	52.55%
DS3 CT	24.50%	24.75%	24.85%	24.95%	25.05%
DS1 CM	2.50%	2.75%	2.85%	2.95%	3.05%
DS3 CM	2.50%	2.75%	2.85%	2.95%	3.05%

Service availability is limited. See # footnote on Page 23-1.

© 2022 Frontier Communications Parent, Inc. All rights reserved.

23. Discount Plans (Cont'd)

23.1 National Discount Plan # (Cont'd)

23.1.5 Application of Discount (Cont'd)

(B) (Cont'd)

(2) Premier Commitment Level Discount Percentages & Plan Year (Cont'd)

Tier	Year 1	Year 2	Year 3	Year 4	Year 5
Discount Tier H					
DS1 CT	52.50%	52.75%	52.85%	52.95%	53.05%
DS3 CT	25.00%	25.25%	25.35%	25.45%	25.55%
DS1 CM	2.75%	3.00%	3.10%	3.20%	3.30%
DS3 CM	2.75%	3.00%	3.10%	3.20%	3.30%
Discount Tier I					
DS1 CT	53.00%	53.25%	53.35%	53.45%	53.55%
DS3 CT	25.50%	25.75%	25.85%	25.95%	26.05%
DS1 CM	3.00%	3.25%	3.35%	3.45%	3.55%
DS3 CM	3.00%	3.25%	3.35%	3.45%	3.55%
Discount Tier J					
DS1 CT	53.50%	53.75%	53.85%	53.95%	54.05%
DS3 CT	26.00%	26.25%	26.35%	26.45%	26.55%
DS1 CM	3.25%	3.50%	3.60%	3.70%	3.80%
DS3 CM	3.25%	3.50%	3.60%	3.70%	3.80%

Service availability is limited. See # footnote on Page 23-1.

© 2022 Frontier Communications Parent, Inc. All rights reserved.

23. Discount Plans (Cont'd)

23.1 National Discount Plan # (Cont'd)

23.1.5 Application of Discount (Cont'd)

(B) (Cont'd)

(3) Deluxe Commitment Level Discount Percentages & Plan Year

Tier	Year 1	Year 2	Year 3	Year 4	Year 5
Discount Tier A					
DS1 CT	52.50%	52.75%	52.85%	52.95%	53.05%
DS3 CT	20.00%	20.25%	20.35%	20.45%	20.55%
DS1 CM	3.50%	3.75%	3.85%	3.95%	4.05%
DS3 CM	3.50%	3.75%	3.85%	3.95%	4.05%
Discount Tier B					
DS1 CT	52.50%	52.75%	52.85%	52.95%	53.05%
DS3 CT	20.00%	20.25%	20.35%	20.45%	20.55%
DS1 CM	3.50%	3.75%	3.85%	3.95%	4.05%
DS3 CM	3.50%	3.75%	3.85%	3.95%	4.05%
Discount Tier C					
DS1 CT	52.50%	52.75%	52.85%	52.95%	53.05%
DS3 CT	20.00%	20.25%	20.35%	20.45%	20.55%
DS1 CM	3.50%	3.75%	3.85%	3.95%	4.05%
DS3 CM	3.50%	3.75%	3.85%	3.95%	4.05%

Service availability is limited. See # footnote on Page 23-1.

© 2022 Frontier Communications Parent, Inc. All rights reserved.

23. Discount Plans (Cont'd)

23.1 National Discount Plan # (Cont'd)

23.1.5 Application of Discount (Cont'd)

(B) (Cont'd)

(3) Deluxe Commitment Level Discount Percentages & Plan Year (Cont'd)

Tier	Year 1	Year 2	Year 3	Year 4	Year 5
Discount Tier D					
DS1 CT	52.50%	52.75%	52.85%	52.95%	53.05%
DS3 CT	20.00%	20.25%	20.35%	20.45%	20.55%
DS1 CM	3.50%	3.75%	3.85%	3.95%	4.05%
DS3 CM	3.50%	3.75%	3.85%	3.95%	4.05%
Discount Tier E					
DS1 CT	52.50%	52.75%	52.85%	52.95%	53.05%
DS3 CT	20.00%	20.25%	20.35%	20.45%	20.55%
DS1 CM	3.50%	3.75%	3.85%	3.95%	4.05%
DS3 CM	3.50%	3.75%	3.85%	3.95%	4.05%
Discount Tier F					
DS1 CT	52.50%	52.75%	52.85%	52.95%	53.05%
DS3 CT	20.00%	20.25%	20.35%	20.45%	20.55%
DS1 CM	3.50%	3.75%	3.85%	3.95%	4.05%
DS3 CM	3.50%	3.75%	3.85%	3.95%	4.05%
Discount Tier G					
DS1 CT	52.50%	52.75%	52.85%	52.95%	53.05%
DS3 CT	20.00%	20.25%	20.35%	20.45%	20.55%
DS1 CM	3.50%	3.75%	3.85%	3.95%	4.05%
DS3 CM	3.50%	3.75%	3.85%	3.95%	4.05%

Service availability is limited. See # footnote on Page 23-1.

© 2022 Frontier Communications Parent, Inc. All rights reserved.

23. Discount Plans (Cont'd)

23.1 National Discount Plan # (Cont'd)

23.1.5 Application of Discount (Cont'd)

(B) (Cont'd)

(3) Deluxe Commitment Level Discount Percentages & Plan Year (Cont'd)

Tier	Year 1	Year 2	Year 3	Year 4	Year 5
Discount Tier H					
DS1 CT	52.50%	52.75%	52.85%	52.95%	53.05%
DS3 CT	20.00%	20.25%	20.35%	20.45%	20.55%
DS1 CM	3.50%	3.75%	3.85%	3.95%	4.05%
DS3 CM	3.50%	3.75%	3.85%	3.95%	4.05%
Discount Tier I					
DS1 CT	52.50%	52.75%	52.85%	52.95%	53.05%
DS3 CT	20.00%	20.25%	20.35%	20.45%	20.55%
DS1 CM	3.50%	3.75%	3.85%	3.95%	4.05%
DS3 CM	3.50%	3.75%	3.85%	3.95%	4.05%
Discount Tier J					
DS1 CT	52.50%	52.75%	52.85%	52.95%	53.05%
DS3 CT	20.00%	20.25%	20.35%	20.45%	20.55%
DS1 CM	3.50%	3.75%	3.85%	3.95%	4.05%
DS3 CM	3.50%	3.75%	3.85%	3.95%	4.05%

Service availability is limited. See # footnote on Page 23-1.

© 2022 Frontier Communications Parent, Inc. All rights reserved.

23. Discount Plans (Cont'd)

23.1 National Discount Plan # (Cont'd)

23.1.6 Special Access DS3 Service Channel Mileage Rates

(A) Special Access DS3 Service Channel Mileage Banded (Circuit Mileage) Rates set forth in Section 7.5.11(J)(2) preceding will apply to Special Access DS3 Services that are provided between two serving wire centers of the same Frontier Telephone Company (i.e., in those instances where service is not provided by more than one exchange telephone company under Section 2.7 preceding).

(B) Except as set forth in (A) preceding, the Channel Mileage (Circuit Mileage) Rates set forth in Section 7.5.11(J)(1) preceding apply to all other Special Access DS3 Services that are included in the NDP and provided between (i) two (2) Frontier Telephone Companies; or (ii) between a Frontier Telephone Company and another exchange telephone company in accordance with Section 2.4.7 preceding.

Service availability is limited. See # footnote on Page 23-1.

© 2022 Frontier Communications Parent, Inc. All rights reserved.

23. Discount Plans (Cont'd)

23.1 National Discount Plan # (Cont'd)

23.1.7 Annual True-Up

After each Anniversary Date during the Term, the Telephone Company will conduct an Annual True-Up which shall be used to determine the NDP Customer's compliance with its established Commitment Levels and Discount Tiers for the Annual True-Up Period.

(A) The Annual True-Up shall consist of the following steps which shall be conducted by the Telephone Company in the following order:

(1) Calculate the Monthly Average Count of Equivalent DS1 CTs and Monthly Average Count of Equivalent DS1 CMs, each as described in Section 23.1.7(B) following; and

(2) Compare the Monthly Average Count of Equivalent DS1 CMs against the CM Commitment Level, and the Monthly Average Count of Equivalent DS1 CTs against the CT Commitment Level to determine if the NDP Customer (a) has met its applicable Commitment Level(s); or (b) has exceeded its applicable Commitment Level(s), as each is described in (B) following; and

(3) If the NDP Customer has not met its CT Commitment Level and/or CM Commitment Level, as applicable, then calculate the Shortfall Penalty that is due in accordance with Section 23.1.7(C) following. If the NDP Customer has exceeded its CT Commitment Level or CM Commitment Level, as applicable, then calculate any adjustment to one or both Commitment Level(s) in accordance with Section 23.1.7(B) following; and

(4) Determine if the Achieved Discount Tier is the same as the Assigned Discount Tier. For an NDP Customer under a Standard Commitment Matrix or Premier Commitment Matrix, if the Assigned Discount Tier is different than the Achieved Discount Tier, then the Telephone Company shall calculate the applicable Discount Tier Adjustment in accordance with Section 23.1.7(D) following. No Discount Tier Adjustment is calculated for an NDP Customer under a Deluxe Commitment Matrix; and

Service availability is limited. See # footnote on Page 23-1.

© 2022 Frontier Communications Parent, Inc. All rights reserved.

23. Discount Plans (Cont'd)

23.1 National Discount Plan # (Cont'd)

23.1.7 Annual True-Up (Cont'd)

(A) (Cont'd)

(5) Assuming the NDP Customer is eligible for the Commitment Buy-Up Bonus for either its CT Commitment Level or CM Commitment Level, or both, and the NDP Customer elects to exercise such Commitment Buy-Up Bonus Option, the Telephone Company will calculate the applicable CBB Discount in accordance with Section 23.1.7(E) following. No later than thirty (30) calendar days prior to the Anniversary Date of its NDP, the NDP Customer must notify the Telephone Company in writing of its intent to exercise the Commitment Buy-Up Bonus Option.

(6) If the NDP Customer added or removed one or more ACNA(s) under Section 23.1.11 or Section 23.1.12 following, respectively, during the Annual True-Up Period, the Telephone Company will adjust the CT Commitment Level and/or CM Commitment Level, as applicable, to reflect Qualifying Services added to or removed from the NDP with such added or removed ACNA(s). No later than thirty (30) calendar days prior to the Anniversary Date of the NDP Customer's NDP, the NDP Customer must notify the Telephone Company in writing of any such changes to its ACNAs.

(7) Subject to the requirements set forth in Section 23.1.7(F) following, assign the Discount Tiers applicable to the next Plan Year; and

(8) Assuming the NDP Customer qualifies for a change from the Standard Commitment Matrix to the Deluxe Commitment Matrix or the Premier Commitment Matrix, or for a change from the Deluxe Commitment Matrix to the Premier Commitment Matrix, and the NDP Customer elects to make such change, the Telephone Company will calculate and set the new Commitment Levels associated with the choice of a Deluxe Commitment Matrix or a Premier Commitment Matrix, as applicable and Discount Tiers in accordance with Section 23.1.7(G) following.

Service availability is limited. See # footnote on Page 23-1.

© 2022 Frontier Communications Parent, Inc. All rights reserved.

23. Discount Plans (Cont'd)

23.1 National Discount Plan # (Cont'd)

23.1.7 Annual True-Up (Cont'd)

(B) Calculation of Monthly Counts and Measuring Monthly Counts Against Commitment Levels

(1) The Telephone Company will calculate the Monthly Average Count of Equivalent DS1 CTs and the Monthly Average Count of Equivalent DS1 CMs for the Qualifying Services purchased under the NDP that were in service for each month of the Annual True-Up Period. The Monthly Average Count of Equivalent DS1 CTs is calculated as follows:

(Step 1) add the actual number of Equivalent DS1 CTs for Qualifying Services purchased under the NDP for each month of the Annual True-Up Period (including any Equivalent DS1 CTs replaced by a Replacing Service using the methodology for a Technology Migration specified in Section 2.10.4 preceding);

(Step 2) add the result from Step 1 preceding to the quantities of Equivalent DS1 CTs determined in (i) and (ii) following:

(i) the Upgrade Adjustment, as calculated in accordance with Section 23.1.7(H) following, for any Qualifying Service(s) that has been Upgraded ; and/or

(ii) the Sale Adjustment, as calculated in accordance with Section 23.1.10 following, for any Qualifying Service(s) which are affected by a Telephone Company Sale;

(Step 3) divide the number derived in Step 2 preceding by 12 months.

A similar calculation is performed by the Telephone Company for calculating the Monthly Average Count of Equivalent DS1 CMs for the Qualifying Services purchased under the NDP by using Equivalent DS1 CMs instead of using Equivalent DS1 CTs.

Service availability is limited. See # footnote on Page 23-1.

© 2022 Frontier Communications Parent, Inc. All rights reserved.

23. Discount Plans (Cont'd)

23.1 National Discount Plan # (Cont'd)

23.1.7 Annual True-Up (Cont'd)

(B) Calculation of Monthly Counts and Measuring Monthly Counts Against Commitment Levels (Cont'd)

(2) The Telephone Company will compare the Monthly Average Count of Equivalent DS1 CTs against the CT Commitment Level, and the Monthly Average Count of Equivalent DS1 CMs against the CM Commitment Level. If the NDP Customer's Monthly Average Count of Equivalent DS1 CTs is equal to or greater than (subject to certain restrictions as set forth in (a) following) the CT Commitment Level, then the NDP Customer shall be deemed to have met its CT Commitment Level. If the NDP Customer's Monthly Average Count of Equivalent DS1 CMs is equal to or greater than (subject to certain restrictions as set forth in (a) following) the CM Commitment Level, then the NDP Customer shall be deemed to have met its CM Commitment Level.

(a) Where the NDP Customer has met its CT Commitment Level and/or CM Commitment Level, as applicable, but has not exceeded such Commitment Level by more than sixty percent (i.e., the NDP Customer's Monthly Average Count of Equivalent DS1 CTs and/or Monthly Average Count of Equivalent DS1 CMs, as applicable, is less than 160% of the applicable Commitment Level), no action is required. An NDP Customer who elected the Premier Commitment Matrix may be eligible to voluntarily increase (buy up) its CT Commitment Level and/or its CM Commitment Level as specified in Section 23.1.7(E) following.

(b) Where the NDP Customer has exceeded its CT Commitment Level and/or its CM Commitment Level, as applicable, by more than sixty percent (i.e., the NDP Customer's Monthly Average Count of Equivalent DS1 CTs and/or Monthly Average Count of Equivalent DS1 CMs, as applicable, is more than 160% of its applicable Commitment Level), the exceeded Commitment Level(s) will be adjusted as follows:

Service availability is limited. See # footnote on Page 23-1.

© 2022 Frontier Communications Parent, Inc. All rights reserved.

23. Discount Plans (Cont'd)

23.1 National Discount Plan # (Cont'd)

23.1.7 Annual True-Up (Cont'd)

(B) Calculation of Monthly Counts and Measuring Monthly Counts Against Commitment Levels (Cont'd)

(2) (Cont'd)

(b) (Cont'd)

(1) Where the NDP Customer elected the Standard Commitment Matrix, and exceeded its CT Commitment Level and/or exceeded its CM Commitment Level by more than 60%, the exceeded Commitment Level(s) will be adjusted to eighty-five percent (85%) of the Monthly Average Count of Equivalent DS1 CTs or Monthly Average Count of Equivalent DS1 CMs, as applicable, for the Annual True-Up Period. Any adjustments to the CT Commitment Level, as described in this Section (B)(2)(b)(1), is made independent of any adjustment to the CM Commitment Level.

(2) Where the NDP Customer elected the Premier Commitment Matrix and exceeded its CT Commitment Level and/or exceeded its CM Commitment Level by more than 60%, the exceeded Commitment Level(s) will be adjusted to ninety percent (90%) of the Monthly Average Count of Equivalent DS1 CTs or Monthly Average Count of Equivalent DS1 CMs, as applicable, for the Annual True-Up Period. An adjustment to the CT Commitment Level, as described in this Section (B)(2)(b)(2), is made independent of an adjustment to the CM Commitment Level.

(3) Where the NDP Customer elected the Deluxe Commitment Matrix and exceeded its CT Commitment Level and/or exceeded its CM Commitment Level by more than 60%, the exceeded Commitment Level(s) will be adjusted to ninety-two percent (92%) of the Monthly Average Count of Equivalent DS1 CTs or Monthly Average Count of Equivalent DS1 CMs, as applicable, for the Annual True-Up Period. An adjustment to the CT Commitment Level, as described in this Section (B)(2)(b)(3), is made independent of an adjustment to the CM Commitment Level.

Service availability is limited. See # footnote on Page 23-1.

© 2022 Frontier Communications Parent, Inc. All rights reserved.

23. Discount Plans (Cont'd)

23.1 National Discount Plan # (Cont'd)

23.1.7 Annual True-Up (Cont'd)

(B) Calculation of Monthly Counts and Measuring Monthly Counts Against Commitment Levels (Cont'd)

(3) Where the NDP Customer has not met its CT Commitment Level and/or has not met its CM Commitment Level, as applicable, a Shortfall Penalty as set forth in Section 23.1.7(C) following applies to each missed Commitment Level.

(C) Shortfall Penalty

A Shortfall Penalty is assessed against (i) the CT Commitment Level when the NDP Customer's Monthly Average Count of Equivalent DS1 CTs is less than the CT Commitment Level; or (ii) the CM Commitment Level is less than the NDP Customer's Monthly Average Count of Equivalent DS1 CMs.

(1) The Shortfall Penalty is calculated as follows:

(Step 1) Calculate the Monthly Average Count of Equivalent DS1 CTs and the Monthly Average Count of Equivalent DS1 CMs during the Annual True-Up Period as set forth in Section 23.1.7(B)(1) preceding.

(Step 2) Determine the Monthly Shortage of Equivalent DS1 CTs and/or the Monthly Shortage of Equivalent DS1 CMs, as applicable.

(a) The NDP Customer's Monthly Shortage of Equivalent DS1 CTs will be determined by subtracting (i) the Monthly Average Count of Equivalent DS1 CTs determined in Step 1; from (ii) the CT Commitment Level.

(b) The NDP Customer's Monthly Shortage of Equivalent DS1 CMs will be determined by subtracting (i) the Monthly Average Count of Equivalent DS1 CMs determined in Step 1; from (ii) the CM Commitment Level.

Service availability is limited. See # footnote on Page 23-1.

© 2022 Frontier Communications Parent, Inc. All rights reserved.

23. Discount Plans (Cont'd)

23.1 National Discount Plan # (Cont'd)

23.1.7 Annual True-Up (Cont'd)

(C) Shortfall Penalty (Cont'd)

(1) (Cont'd)

(Step 3) Calculate the Lowest Monthly Rate per Equivalent DS1 CT and/or the Lowest Monthly Rate per Equivalent DS1 CM, as applicable.

(a) The Lowest Monthly Rate per Equivalent DS1 CT is calculated by (i) finding the lowest DS1 CT rate for a Discounted Rate Element; and (ii) finding the lowest average DS3 CT rate for a Discounted Rate Element, where the average DS3 CT rate for a 3 Capacity System is the sum of the rate for the First System plus twice the rate for an additional system, divided by 3; and (iii) dividing the result in (ii) preceding by 28; and (iv) using the lower rate produced by (i) or (iii); and (v) applying the appropriate discount percentage.

(b) The Lowest Monthly Rate per Equivalent DS1 CM is calculated by (i) finding the lowest DS1 rate per mile for a Discounted Rate element, and (ii) finding the lowest average DS3 CM rate for a Discounted Rate Element, where the average rate for banded mileage is the rate divided by the midpoint of the band or by the lowest distance of a band with no upper limit; and (iii) dividing the result in (ii) preceding by 28; and (iv) using the lower rate produced by (i) or (iii); and (v) applying the appropriate discount percentage.

Service availability is limited. See # footnote on Page 23-1.

Material previously appearing on this page now appears on Page 23-45.1

© 2022 Frontier Communications Parent, Inc. All rights reserved.

23. Discount Plans (Cont'd)

23.1 National Discount Plan # (Cont'd)

23.1.7 Annual True-Up (Cont'd)

(C) Shortfall Penalty (Cont'd)

(1) (Cont'd)

(Step 4) Calculate the Shortfall Penalty for the CT Commitment Level and/or the CM Commitment Level, as applicable.

(a) The Telephone Company will calculate the Shortfall Penalty for the CT Commitment Level by multiplying (i) the Monthly Shortage determined in Step 2; by (ii) the Lowest Monthly Rate per Equivalent DS1 CT calculated in Step 3; and by (iii) twelve (12) months.

(b) The Telephone Company will calculate the Shortfall Penalty for the CM Commitment Level by multiplying (i) the Monthly Shortage determined in Step 2; by (ii) the Lowest Monthly Rate per Equivalent DS1 CM calculated in Step 3; and by (iii) twelve (12) months.

Service availability is limited. See # footnote on Page 23-1.

© 2022 Frontier Communications Parent, Inc. All rights reserved.

23. Discount Plans (Cont'd)

23.1 National Discount Plan # (Cont'd)

23.1.7 Annual True-Up (Cont'd)

(C) Shortfall Penalty (Cont'd)

(2) As an illustrative example of the Shortfall Penalty calculation for the CT Commitment Level, assume that at the first Annual True-Up, an NDP Customer who selected the Premier Commitment Matrix had the following results: (i) the NDP Customer has met but has not exceeded by more than 60% its CM Commitment Level of 75,000 Equivalent DS1 CMs; (ii) the NDP Customer has not met its CT Commitment Level of 120,000 Equivalent DS1 CTs; and (iii) the Monthly Average Count of Equivalent DS1 CTs is 118,000. No Shortfall Penalty is applicable to NDP Customer's CM Commitment Level since NDP Customer has met its CM Commitment Level. Shortfall Penalty is due on the CT Commitment Level and is calculated as follows (using Steps 1-4 above):

(Step 1) Calculate the Monthly Average Count of Equivalent DS1 CTs. In this example, this number is 118,000 Equivalent DS1 CTs.

(Step 2) Calculate the Monthly Shortage of Equivalent DS1 CTs. [120,000 Commitment Level – 118,000 Monthly Average Count of Equivalent DS1 CTs = 2,000 Equivalent DS1 CTs]

(Step 3) Calculate the Lowest Monthly Rate per Equivalent DS1 CT. It is found that the lowest DS1 CT rate is $201.13 in Florida, and the lowest average DS3 CT rate is $847.35 for a protected individual DS3 without Telephone Company Electronics in California Zone 1, 2, or 3. The lowest DS3 rate divided by 28 is $30.2625. Applying the Premier Commitment Tier C discount rate of 49.5% yields a Lowest Monthly Rate per Equivalent DS1 CT of $15.283825.

(Step 4) Calculate the Shortfall Penalty. The Shortfall Penalty is $366,811.80 (the Monthly Shortage of 2,000 Equivalent DS1 CTs x $15.283825 Lowest Monthly Rate per Equivalent DS1 CT x 12 months).

Service availability is limited. See # footnote on Page 23-1.

© 2022 Frontier Communications Parent, Inc. All rights reserved.

23. Discount Plans (Cont'd)

23.1 National Discount Plan # (Cont'd)

23.1.7 Annual True-Up (Cont'd)

(C) Shortfall Penalty (Cont'd)

(3) The Telephone Company will apply the Shortfall Penalty calculated in (C)(1) preceding to the BANs designated by the NDP Customer under Section 23.1.2(C)(5) preceding. The Shortfall Penalty is not subject to late payment penalty under Section 2.4.1 preceding, except when the bill containing such Shortfall Penalty is not paid by the payment date.

(D) Discount Tier Adjustment

(1) At each Annual True-Up, the Telephone Company will automatically adjust the Discount Tier(s) if the Achieved Discount Tier is a higher or a lower Discount Tier than the Assigned Discount Tier that was in effect during the Annual True-Up Period. Such action shall be referred to as the Discount Tier Adjustment. The Achieved Discount Tier and the Assigned Discount Tier are independently determined for Channel Terminations and Channel Mileage. For NDP Customers who elected either the Standard Commitment Matrix or the Premier Commitment Matrix, the Discount Tier Adjustment is set forth in Step 1 through Step 6 of (D)(2) following, the result of which may be an increase or decrease in the discount percentage that was applied during the Annual True-Up Period, and shall be reflected as a credit or debit on the NDP Customer's bill.

(2) A Discount Tier Adjustment is calculated as follows:

(Step 1) Calculate the Monthly Average Count of Equivalent DS1 CTs and the Monthly Average Count of Equivalent DS1 CMs during the Annual True-Up Period as set forth in Section 23.1.7(B)(1) preceding.

Service availability is limited. See # footnote on Page 23-1.

© 2022 Frontier Communications Parent, Inc. All rights reserved.

23. Discount Plans (Cont'd)

23.1 National Discount Plan # (Cont'd)

23.1.7 Annual True-Up (Cont'd)

(D) Discount Tier Adjustment (Cont'd)

(2) (Cont'd)

(Step 2) Determine the Achieved Discount Tiers for the Monthly Average Count of Equivalent DS1 CTs and Monthly Average Count of Equivalent DS1 CMs, respectively.

(a) Using the Equivalent DS1 CT table set forth in Section 23.1.4(B)(1) preceding, (a) find the Achieved Discount Tier for the Monthly Average Count of Equivalent DS1 CTs determined in Step 1 above; and

(b) Using the Equivalent DS1 CM table set forth in Section 23.1.4(B)(2)(B) preceding, find the Achieved Discount Tier for the Monthly Average Count of Equivalent DS1 CMs determined in Step 1 above.

If an Achieved Discount Tier for Channel Terminations or Channel Mileage, as applicable, is the same Discount Tier as the Assigned Discount Tier for Channel Terminations or Channel Mileage, as applicable, no Discount Tier Adjustment will be made. In this case, Step 3 through Step 6 following do not apply.

For NDP Customers who elected the Standard Commitment Matrix or the Premier Commitment Matrix, if an Achieved Discount Tier for Channel Terminations or Channel Mileage, as applicable, is a higher or lower Discount Tier than the Assigned Discount Tier for Channel Terminations or Channel Mileage, as applicable, a Discount Tier Adjustment (as calculated in Steps 3 through Step 6) following applies.

Service availability is limited. See # footnote on Page 23-1.

© 2022 Frontier Communications Parent, Inc. All rights reserved.

23. Discount Plans (Cont'd)

23.1 National Discount Plan # (Cont'd)

23.1.7 Annual True-Up (Cont'd)

(D) Discount Tier Adjustment (Cont'd)

(2) (Cont'd)

(Step 3) Calculate the Non-Discounted Billed Amounts.

The Non-Discounted Billed Amount(s) are (a) the total Monthly Charges for the Channel Termination and multiplexer Discounted Rate Elements that the NDP Customer would have paid during the Annual True-Up Period if the discount percentages as set forth in Section 23.1.5(B) preceding were not applied; and (b) the total Monthly Charges for the Channel Mileage Discounted Rate Elements that the NDP Customer would have paid during the Annual True-Up Period, if the discount percentages as set forth in Section 23.1.5(B) preceding were not applied. Discounted Rate Elements are specified in Section 23.1.5(A) preceding. The Non-Discounted Billed Amount(s) are calculated as follows.

(1)

(2)

(3)

(4)

(5) Calculate the Non-Discounted Billed Amount for Special Access DS1 Service SAL Discounted Rate Elements under FCC 14 and Special Access DS1 Service Circuit Termination Discounted Rate Elements under this tariff by (i) adding the billed Monthly Charges for all such SALs and Circuit Terminations in each month of the Annual True-Up Period; and (ii) then dividing the number derived in (i) preceding by one (1) minus the discount percentage associated with the Assigned Discount Tier for such Discounted Rate Element.

Service availability is limited. See # footnote on Page 23-1.

© 2022 Frontier Communications Parent, Inc. All rights reserved.

23. Discount Plans (Cont'd)

23.1 National Discount Plan # (Cont'd)

23.1.7 Annual True-Up (Cont'd)

(D) Discount Tier Adjustment (Cont'd)

(2) (Cont'd)

(Step 3) (Cont'd)

(6) Calculate the Non-Discounted Billed Amount for Special Access DS3 SAL Discounted Rate Elements under FCC14 and Special Access DS3 Service Circuit Termination Discounted Rate Elements under this tariff by (i) adding the billed Monthly Charges for all such SALs and Circuit Terminations in each month of the Annual True-Up Period; and (ii) then dividing the number derived in (i) preceding by one (1) minus the discount percentage associated with the Assigned Discount Tier for such Discounted Rate Element.

(7)

(8)

(9) Calculate the Non-Discounted Billed Amount for Special Access DS1 Service Special Transport Discounted Rate Elements under FCC14 and Special Access DS1 Service Circuit Mileage under this tariff by (i) adding the billed Monthly Charges for all such Special Transport and Circuit Mileage in each month of the Annual True-Up Period; and (ii) then dividing the number derived in (i) preceding by one (1) minus the discount percentage associated with the Assigned Discount Tier for such Discounted Rate Element.

Service availability is limited. See # footnote on Page 23-1.

© 2022 Frontier Communications Parent, Inc. All rights reserved.

23. Discount Plans (Cont'd)

23.1 National Discount Plan # (Cont'd)

23.1.7 Annual True-Up (Cont'd)

(D) Discount Tier Adjustment (Cont'd)

(2) (Cont'd)

(Step 3) (Cont'd)

(10) Calculate the Non-Discounted Billed Amount for Special Access DS3 Service Special Transport (including Banded Special Transport and Special Transport) Discounted Rate Elements under FCC14 and Special Access DS3 Service Circuit Mileage (including Banded Circuit Mileage and Circuit Mileage) under this tariff by (i) adding the billed Monthly Charges for all such Special Transport and Circuit Mileage in each month of the Annual True-Up Period; and (ii) then dividing the number derived in (i) preceding by one (1) minus the discount percentage associated with the Assigned Discount Tier for such Discounted Rate Element.

(Step 4) Calculate the difference in the discount percentages.

For each of the Discounted Rate Element categories specified in (1) through (10) of Step 3 above, using the discount percentages set forth in 23.1.5(B) preceding, individually calculate the difference between (i) the discount percentage of the Achieved Discount Tier; and (ii) the discount percentage of the Assigned Discount Tier.

For example, if the Assigned Discount Tier for SALs and circuit terminations under category (5) of Step 3 preceding has a discount percentage of 36% and the Achieved Discount Tier for category (5) of Step 3 preceding has a discount percentage of 35%, then the difference in the discount percentages is 1%.

Service availability is limited. See # footnote on Page 23-1.

© 2022 Frontier Communications Parent, Inc. All rights reserved.

23. Discount Plans (Cont'd)

23.1 National Discount Plan # (Cont'd)

23.1.7 Annual True-Up (Cont'd)

(D) Discount Tier Adjustment (Cont'd)

(2) (Cont'd)

(Step 5) Individually calculate the dollar amount of the Discount Tier Adjustments.

For each Discounted Rate Element category specified in (1) through (10) of Step 3 above, individually calculate the dollar amount of the Discount Tier Adjustment by multiplying (i) the Non-discounted Billed Amount calculated for each Discounted Rate Element category in Step 3 above; by (ii) the difference in the discount percentage determined in Step 4 above for such Discounted Rate Element category.

(Step 6) Calculate the total Discount Tier Adjustment for the NDP.

(1) Add the total of the Discount Tier Adjustments for the Channel Termination and multiplexer rate elements as calculated in Step 5. The resulting total is the Discount Tier Adjustment for Channel Terminations and multiplexers.

(2) Add the total of the Discount Tier Adjustments for the Channel Mileage rate elements as calculated in Step 5. The resulting total is the Discount Tier Adjustment for Channel Mileage.

(3) For NDP Customers who elected the Standard Commitment Matrix or the Premier Commitment Matrix, Discount Tier Adjustments may result in a debit adjustment or credit adjustment to the NDP Customer's bill. The Telephone Company will apply the Discount Tier Adjustment calculated in (D)(2)(a) preceding to the BAN(s) designated by the NDP Customer under Section 23.1.2(C)(5) preceding. The Discount Tier Adjustment is not subject to late payment penalty under Section 2.4.1 preceding, except when the bill containing a debit Discount Tier Adjustment is not paid by the payment date.

Service availability is limited. See # footnote on Page 23-1.

© 2022 Frontier Communications Parent, Inc. All rights reserved.

23. Discount Plans (Cont'd)

23.1 National Discount Plan # (Cont'd)

23.1.7 Annual True-Up (Cont'd)

(D) Discount Tier Adjustment (Cont'd)

(4) As an illustrative example of an adjustment to a higher Discount Tier for Channel Terminations, assume that (i) the NDP Customer is under the Premier Commitment Matrix; and (ii) the Assigned Discount Tier for Channel Terminations is Discount Tier D (120,001 to 195,000 Equivalent DS1 CTs) which provides a 36% discount for DS1 Channel Terminations; and (iii) no Discount Tier Adjustment is required for Channel Mileage because the NDP Customer's Achieved Discount Tier is the same as the Assigned Discount Tier for the Annual True-Up Period (i.e., the Telephone Company will disregard categories (7) through (10) of Step 3 in Section 23.1.7(D)(3) preceding).

(Step 1) Calculate the Monthly Average Count of Equivalent DS1 CTs in accordance with Section 23.1.7(B)(1) preceding. In this example, assume that this number is calculated as 201,000 Equivalent DS1 CTs.

(Step 2) Determine the Achieved Discount Tier in accordance with category (5) of Step 3 in Section 23.1.7(D)(2)(a) preceding. For purposes of this example, assume that Achieved Discount Tier for DS1 SALs and circuit terminations is Tier E (195,001 to 275,000 which has a 37% discount). Since the Monthly Average Count of Equivalent DS1 CTs is 201,000 Equivalent DSI CTs, the corresponding Achieved Discount Tier for Channel Terminations is Tier E (195,001 to 275,000 which has a corresponding discount percentage of 37% discount).

Since the Achieved Discount Tier (Tier E) is a higher Discount Tier than the Assigned Discount Tier (Tier D), proceed with Steps 3 through 6 of Section 23.1.7(D)(2)(a) preceding.

Service availability is limited. See # footnote on Page 23-1.

© 2022 Frontier Communications Parent, Inc. All rights reserved.

23. Discount Plans (Cont'd)

23.1 National Discount Plan # (Cont'd)

23.1.7 Annual True-Up (Cont'd)

(D) Discount Tier Adjustment (Cont'd)

(4) (Cont'd)

(Step 3) Calculate the Non-Discounted Billed Amounts for each Channel Termination and multiplexer Discounted Rate Element category specified in Step 3 of Section 23.1.7(D)(2)(a) preceding.

The Non-Discounted Billed Amount for DS1 SALS and circuit terminations (i.e., category (5) of Step 3 in Section 23.1.7(D)(2)(a) preceding), is calculated as follows:

(i) For this example, assume the total billed Monthly Charges for SALs and circuit terminations is $12,000,000.

(ii) Remove the discount associated with the Assigned Discount Tier [$12,000,000 / (1 - 0.36) = $18,750,000].

The monthly Non-Discounted Billed Amount for SALs and circuit terminations (i.e., category (5) of Step 3 in Section 23.1.7(D)(2)(a) preceding) is $18,750,000.

In accordance with Step 3 of Section 23.1.7(D)(2)(a) preceding, calculate the monthly Non-Discounted Billed Amount for each of the remaining Channel Termination and multiplexer Discounted Rate Elements (categories (2) through (6) of Step 3 in Section 23.1.7(D)(2)(a) preceding).

Service availability is limited. See # footnote on Page 23-1.

© 2022 Frontier Communications Parent, Inc. All rights reserved.

23. Discount Plans (Cont'd)

23.1 National Discount Plan # (Cont'd)

23.1.7 Annual True-Up (Cont'd)

(D) Discount Tier Adjustment (Cont'd)

(4) (Cont'd)

(Step 4) Calculate the difference in the discount percentage between the Assigned Discount Tier and the Achieved Discount Tier for the DS1 SALs and circuit terminations (i.e., category (5) of Step 3 in Section 23.1.7(D)(2)(a) preceding). For this Discounted Rate Element category, the difference is calculated as follows: [37% Achieved Discount Tier - 36% Assigned Discount Tier = 1% difference]

In accordance with Step 4 of Section 23.1.7(D)(2))a_ preceding, calculate the difference in the discount percentage between the Assigned Discount Tier and the Achieved Discount Tier for each of the remaining Channel Termination and multiplexer Discounted Rate Elements (i.e., categories (2) through (6) of Step 3 in Section 23.1.7(D)(2)(a) preceding).

(Step 5) Calculate the dollar amount of the Discount Tier Adjustments for the DS1 SALs and circuit terminations (i.e., category (5) of Step 3 in Section 23.1.7(D)(2)(a) preceding). For this Discounted Rate Element category, the dollar amount is calculated as follows [18,750,000 Non-Discounted Billed Amount from Step 3 x 1% difference in discount percentage from Step 4 = $187,500].

In accordance with Step 5 of Section 23.1.7(D)(2)(a) preceding, calculate the dollar amount for each of the remaining Channel Termination and multiplexer Discounted Rate Elements (i.e., categories (2) through (6) of Step 3 in Section 23.1.7(D)(2)(a) preceding).

Service availability is limited. See # footnote on Page 23-1.

© 2022 Frontier Communications Parent, Inc. All rights reserved.

23. Discount Plans (Cont'd)

23.1 National Discount Plan # (Cont'd)

23.1.7 Annual True-Up (Cont'd)

(D) Discount Tier Adjustment (Cont'd)

(4) (Cont'd)

(Step 5) (Cont'd)

Assume the calculations in Steps 3 through 5 preceding are done for each of the remaining Channel Termination and multiplexer Discounted Rate Elements (i.e., categories (2) through (6) of Step 3 in Section 23.1.7(D)(2)(a) preceding). Further assume the calculations yield the following Discount Tier Adjustments:

DS1 CT this tariff & FCC16	$100,000
DS3 CT this tariff & FCC16	$200,000

(Step 6) Calculate the Total Discount Tier Adjustment in accordance with Step 6 of Section 23.1.7(D)(2)(a) preceding. The total Discount Tier Adjustment for Channel Termination and multiplexer Discounted Rate Elements is equal to $300,000 $100,000 + $200,000]. The NDP Customer would receive a credit of $300,000 on its BANs for this Discount Tier Adjustment.

(5) No change will be made to the NDP Customer's Commitment Levels, regardless of whether or not the Discount Tier was adjusted upward or downward. An NDP Customer subscribed to the Premier Commitment Matrix may qualify for the Commitment Buy-Up Bonus Option and receive a CBB Discount under Section 23.1.7(E) following.

Service availability is limited. See # footnote on Page 23-1.

© 2022 Frontier Communications Parent, Inc. All rights reserved.

23. Discount Plans (Cont'd)

23.1 National Discount Plan # (Cont'd)

23.1.7 Annual True-Up (Cont'd)

(E) Commitment Buy-Up Bonus

During an Annual True-Up, an NDP Customer that meets the following criteria may choose to exercise the Commitment Buy-Up Bonus option. The CBB Discount is provided in connection with the Annual True-Up Period, and is in addition to any other discounts provided under NDP.

(1) If the NDP Customer meets all of the requirements of (a) through (c) following, the NDP Customer is eligible to exercise the Commitment Buy-Up Bonus Option with respect to either or both Commitment Levels:

(a) the NDP Customer subscribes to the Premier Commitment Matrix during the Annual True-Up Period; and

(b) the NDP Customer has met both its CT Commitment Level and its CM Commitment Level (assuming it established both such Commitment Levels) under Section 23.1.7(B) preceding; and

(c) the actual quantity of Equivalent DS1 CTs or Equivalent DS1 CMs, as applicable, in month twelve (12) of the Annual True-Up Period is five percent (5%) or more greater than the actual quantity of Equivalent DS1 CTs or CMs, as applicable, in month one (1) of the Annual True-Up Period.

(2) If the NDP Customer elects to increase its CT Commitment Level and/or CM Commitment Level, the new Commitment Level(s) for the NDP will be set at ninety (90%) of the month 12 count of Equivalent DS1 CTs; or at ninety (90%) of the month 12 count of Equivalent DS1 CMs, as applicable. In determining the month 12 counts, the Telephone Company will include any Upgrade Adjustment or Sale Adjustment as set forth in Sections 23.1.7(H) and 23.1.10 following, respectively.

Service availability is limited. See # footnote on Page 23-1.

© 2022 Frontier Communications Parent, Inc. All rights reserved.

23. Discount Plans (Cont'd)

23.1 National Discount Plan # (Cont'd)

23.1.7 Annual True-Up (Cont'd)

(E) Commitment Buy-Up Bonus (Cont'd)

(3) Where an increase in (E)(2) above occurs, the CBB Discount shall be calculated in accordance with (E)(4) following, and such calculation shall use the Percent Increase and corresponding CBB Discount Percentage achieved by the NDP Customer in accordance with the table below:

Percent Increase	CBB Discount Percentage
Less than 5%	No Discount
5% - 9.99%	1%
10% – 14.99%	2%
15% - 19.99%	3%
20% - 24.99%	4%
25% or more	5%

(4) The CBB Discount is calculated as follows.

(Step 1) Calculate the Percent Increase and Corresponding CBB Discount Percentage

A Percent Increase will be calculated for the Equivalent DS1 CTs and a separate Percent Increase will be calculated for the Equivalent DS1 CMs.

(a) The Percent Increase for the Equivalent DS1 CTs is calculated as follows:

(1) subtract (i) the actual count of Equivalent DS1 CTs in month one (1) of the Annual True-Up Period; from (ii) the actual count of Equivalent DS1 CTs in month twelve (12) of the Annual True-Up Period; and

(2) divide the result from (a)(1) preceding by the actual count of Equivalent DS1 CTs in month one (1) of the Annual True-Up Period.

Service availability is limited. See # footnote on Page 23-1.

© 2022 Frontier Communications Parent, Inc. All rights reserved.

23. Discount Plans (Cont'd)

23.1 National Discount Plan # (Cont'd)

23.1.7 Annual True-Up (Cont'd)

(E) Commitment Buy-Up Bonus (Cont'd)

(4) (Cont'd)

(Step 1) Calculate the Percent Increase and Corresponding CBB Discount Percentage (Cont'd)

(b) The Percent Increase for the Equivalent DS1 CM is calculated as follows:

(1) subtract (i) the actual count of Equivalent DS1 CMs in month one (1) of the Annual True-Up Period; from (ii) the actual count of Equivalent DS1 CMs in month twelve (12) of the Annual True-Up Period; and

(2) divide the result from (b)(1) preceding by the actual count of Equivalent DS1 CMs in month one (1) of the Annual True-Up Period.

The applicable CBB Discount Percentage is derived from the table in Section 23.1.7(E)(3) preceding by using the Percent Increase as calculated in this Step 1. The CBB Discount Percentage is separately derived for Channel Terminations and Channel Mileage from the table in Section 23.1.7(E)(3) preceding.

For example, if the Percent Increase (as calculated in Step 1) for Equivalent DS1 CTs is 11%, and the Percent Increase for Equivalent DS1 CMs is 23%, then the corresponding CBB Discount Percentage from the table in (E)(3) preceding is 2% for Equivalent DS1 CTs and 4% for Equivalent DS1 CMs.

(Step 2) Calculate the Monthly Average Count of Equivalent DS1 CTs or Monthly Average Count of Equivalent DS1 CMs

Calculate the Monthly Average Count of Equivalent DS1 CTs in accordance with Step 1 of Section 23.1.7(B)(1) preceding and/or the Monthly Average Count of Equivalent DS1 CMs in accordance with Step 1 of Section 23.1.7(B)(1) preceding, as applicable.

Service availability is limited. See # footnote on Page 23-1.

© 2022 Frontier Communications Parent, Inc. All rights reserved.

23. Discount Plans (Cont'd)

23.1 National Discount Plan # (Cont'd)

23.1.7 Annual True-Up (Cont'd)

(E) Commitment Buy-Up Bonus (Cont'd)

(4) (Cont'd)

(Step 3) Calculate the Average Monthly Rate per Equivalent DS1 CTs or Equivalent DS1 CMs

The Average Monthly Rate per Equivalent DS1 CT is calculated in accordance with Step 3 of Section 23.1.7(C)(1) preceding.

The Average Monthly Rate per Equivalent DS1 CM is calculated in accordance with Step 3 of Section 23.1.7(C)(2) preceding.

(Step 4) Calculate the Actual Increase in Equivalent DS1 CTs and Equivalent DS1 CMs

The Actual Increase in the count of Equivalent DS1 CTs or Equivalent DS1 CMs, as applicable, is calculated by subtracting (i) the number of Equivalent DS1 CTs or Equivalent DS1 CMs (as applicable) in month one (1) of the Annual True-Up Period; from (ii) the number of Equivalent DS1 CTs or Equivalent DS1 CMs (as applicable) in month twelve (12) of the Annual True-Up Period.

(Step 5) Calculate the CBB Discount

The CBB Discount is equal to the product of the following:

(a) the Average Monthly Rate per Equivalent DS1 CT or Equivalent DS1 CM, as applicable, as determined in Step 3 preceding; multiplied by

(b) the Actual Increase determined in Step 4 preceding; multiplied by

(c) the applicable CBB Discount Percentage determined in Step 1; multiplied by

(d) 12 months.

Service availability is limited. See # footnote on Page 23-1.

© 2022 Frontier Communications Parent, Inc. All rights reserved.

23. Discount Plans (Cont'd)

23.1 National Discount Plan # (Cont'd)

23.1.7 Annual True-Up (Cont'd)

(E) Commitment Buy-Up Bonus (Cont'd)

(5) As an illustrative example of the Commitment Buy-Up Bonus and the calculation of the CBB Discount for the CT Commitment Level, assume that the actual number of Equivalent DS1 CTs in month one (1) of the Annual True-Up Period was 6,046 Equivalent DS1 CTs and the actual number of Equivalent DS1 CTs in month twelve (12) of the Annual True-Up Period was 7,001.

(Step 1) Calculate the Percent Increase and corresponding CBB Discount Percentage in accordance with Step 1 of Section 23.1.7(E)(4) preceding.
In this example, the Percent Increase for Equivalent DS1 CTs is 16% [(7,001 – 6,046)/6,046]. The corresponding CBB Discount Percentage per the table in Section 23.1.7(E)(3) preceding is 3%.

(Step 2) Calculate the Monthly Average Count of Equivalent DS1 CTs in accordance with Step 2 of Section 23.1.7(E)(4) preceding. For this example, assume that the Monthly Average Count of Equivalent DS1 CTs is 6,350 Equivalent DS1 CTs.

(Step 3) Calculate the Average Monthly Rate per Equivalent DS1 CT in accordance with Step 3 of Section 23.1.7(E)(4) preceding. For this example, assume that the total charges over the Annual True-Up Period were $9,475,000 which results in an average of $124.34 per Equivalent DS1 CT. [(9,475,000 divided by 12 months) = $789,583] ($789,583 divided by 6,350 = an Average Monthly Rate of Equivalent DS1 CTs is $124.34 per Equivalent DS1 CT]

(Step 4) Determine the Actual Increase in Equivalent DS1 CTs in accordance with Step 4 of Section 23.1.7(E)(4) preceding. In this example, the Actual Increase for Equivalent DS1 CTs is 955 Equivalent DS1 CTs (7,001 – 6046).

(Step 5) Determine the CBB Discount for the CT Commitment Level in accordance with Step 5 of Section 23.1.7(E)(4) preceding. In this example, the CBB Discount is $42,748 [955 Actual Increase x $124.34 Average Rate per Equivalent DS1 CT x 3% Percent Increase x 12 months = $42,748 CBB Discount].

Service availability is limited. See # footnote on Page 23-1.

© 2022 Frontier Communications Parent, Inc. All rights reserved.

23. Discount Plans (Cont'd)

23.1 National Discount Plan # (Cont'd)

23.1.7 Annual True-Up (Cont'd)

(F) Assign the Discount Tier(s) for the Next Plan Year

The Telephone Company will assign the Discount Tier(s) applicable to the next Plan Year (i.e., from the most recent Anniversary Date to the next successive Anniversary Date) if the Achieved Discount Tier in month twelve (12) of the Annual True-Up Period (taking into account any (i) Upgrade Adjustment, as calculated in accordance with Section 23.1.7(H) following, for any Qualifying Service(s) that has been Upgraded; and (ii) any Sale Adjustment, as calculated in accordance with Section 23.1.10 following, for any Qualifying Service(s) which are affected by a Telephone Company Sale) is a higher or lower Discount Tier than the Assigned Discount Tier for the Annual True-Up Period. With respect to either Channel Terminations or Channel Mileage, the new Discount Tier for the next Plan Year (i.e., the new Assigned Discount Tier) shall result in an increased or decreased discount percentage pursuant to Section 23.1.5(B) preceding. If the Achieved Discount Tier (as determined in accordance with Section 23.1.7(D) preceding) is the same as the Assigned Discount Tier for the Annual True-Up, no action will be taken.

For example, assume that the NDP Customer's Assigned Discount Tier in Plan Year 2 for Channel Mileage Discounted Rate Elements was Discount Tier B. Further assume that the NDP Customer's Achieved Discount Tier for such Channel Mileage Discounted Rate Elements in month 12 of the Annual True-Up Period was Discount Tier C. In this case, the Telephone Company will assign Discount Tier C as the Discount Tier for the next Plan Year.

Service availability is limited. See # footnote on Page 23-1.

© 2022 Frontier Communications Parent, Inc. All rights reserved.

23. Discount Plans (Cont'd)

23.1 National Discount Plan # (Cont'd)

23.1.7 Annual True-Up (Cont'd)

(G) Changes to Commitment Matrix During an Annual-True-Up

(1) Permitted Changes:

If the NDP Customer has selected the Standard Commitment Matrix at the beginning of the Initial Term or the Renewal Term, as applicable, the NDP Customer may, at its option, change its Commitment Matrix selection to either the Deluxe Commitment Matrix or the Premier Commitment Matrix at an Annual True-Up. If the NDP Customer has selected the Deluxe Commitment Matrix at the beginning of the Initial Term or the Renewal Term, as applicable, the NDP Customer may, at its option, change its Commitment Matrix selection to the Premier Commitment Matrix at an Annual True-Up. Such request must be in writing and made no later than thirty (30) calendar days prior to the Anniversary Date of the NDP Customer's NDP. The Telephone Company will set the new Commitment Levels based on the Commitment Matrix selected in accordance with Section 23.1.4(C) preceding. Such new Commitment Levels shall apply on a going forward basis for the balance of the Initial Term or Renewal Term, as applicable.

(2) Prohibited Changes

If the NDP Customer has selected the Premier Commitment Matrix at the beginning of the Initial Term or the Renewal Term, as applicable, the NDP Customer may not change such Commitment Matrix during the Initial Term, or during a Renewal Term, as applicable, including during an Annual True-Up. If the NDP Customer has selected the Deluxe Commitment Matrix at the beginning of the Initial Term or the Renewal Term, as applicable, the NDP Customer may not change such Commitment Matrix to the Standard Commitment Matrix during the Initial Term, or during a Renewal Term, as applicable, including during an Annual True-Up.

(3) Certain Other Changes to the Commitment Matrix

As described further in Section 23.1.14 following, at the end of the Initial Term or any Renewal Term, as applicable, an NDP Customer that renews its NDP is permitted to pick a different Commitment Matrix for the Renewal Term, so long as the NDP Customer does not also concurrently select the Renewal Benefit Option.

Service availability is limited. See # footnote on Page 23-1.

© 2022 Frontier Communications Parent, Inc. All rights reserved.

23. Discount Plans (Cont'd)

23.1 National Discount Plan # (Cont'd)

23.1.7 Annual True-Up (Cont'd)

(H) Upgrades

(1) For customers who subscribe to NDP on or after December 2, 2010, or renew an expiring NDP on or after December 2, 2010, the NDP customer may disconnect a Qualifying Service in order to replace such Qualifying Service with a Replacing Service pursuant to Section 2.10 preceding.

For customers who subscribed to an NDP prior to December 2, 2010, this Section 23.1.7(H) includes replacements of Qualifying Services with Telephone Company provided Ethernet private line service or a Telephone Company provided switched Ethernet service. However, the customer may, at its option, replace a Qualifying Service with a Replacing Service pursuant to Section 2.10 preceding in lieu of this Section 23.1.7(H).

(2) During the Term of the NDP, an NDP Customer may Upgrade a Qualifying Service to a service that is (a) a Qualifying Service of a higher capacity/bandwidth (e.g., an Upgrade of a Special Access DS3 Service to a DSEF Service); or (b) a non-Qualifying Service of a higher bandwidth/capacity (e.g., an Upgrade of a Special Access DS3 Service to a Telephone Company provided optical service of a greater bandwidth). An Upgrade under (a) above shall result in no change to the NDP Customer's NDP.

Service availability is limited. See # footnote on Page 23-1.

© 2022 Frontier Communications Parent, Inc. All rights reserved.

23. Discount Plans (Cont'd)

23.1 National Discount Plan # (Cont'd)

23.1.7 Annual True-Up (Cont'd)

(H) Upgrades (Cont'd)

(3) Except as otherwise specified in Sections 2.10.4 and 2.10.5 preceding for a Technology Migration, an Upgrade must meet all of the following conditions:

(a) Both the Qualifying Service being Upgraded (the existing service) and the replacing Qualifying Service or non-Qualifying Service, as applicable, (the new service), must be provided solely by the Telephone Company;
(b) at least one of the terminating locations of the new service must be the same location as one of the terminating locations of the existing service; and
(c) the total bandwidth or capacity of the new service must be equal to or greater than the total bandwidth or capacity of the existing service; and
(d) the NDP Customer must submit order(s) for the disconnect of the existing service and the installation of the new service, such that the installation date of the new service is within ninety (90) days of the disconnection of the existing service. The orders must be related by related purchase order number (RPON); and
(e) The commitment period for the new service must be at least five (5) years, except where a commitment period of at five (5) years or longer is not available, in which case the longest available commitment period must be selected; and
(f) At each next Annual True-Up following the Upgrade, the new service must be installed and still in-service to be eligible for an Upgrade Adjustment as set forth in (H)(3) following.
(g) No later than thirty (30) days prior to the Anniversary Date of the NDP, the NDP Customer must provide the Telephone Company with a list of the existing services (as defined in (H)(2)(a) above) that were Upgraded to non-Qualifying Services (as defined in (H)(2)(a) above) during the Annual True-Up Period. The list must be in writing and must contain the following information:

(i) the circuit identification number for each existing service; and
(ii) the circuit identification number for each new service; and
(iii) the RPONs associated with the Upgrades.

Service availability is limited. See # footnote on Page 23-1.

© 2022 Frontier Communications Parent, Inc. All rights reserved.

23. Discount Plans (Cont'd)

23.1 National Discount Plan # (Cont'd)

23.1.7 Annual True-Up (Cont'd)

(H) Upgrades (Cont'd)

(4) With the exception of an Upgrade involving a Technology Migration pursuant to Section 2.9 preceding, when a Qualifying Service is Upgraded to a non-Qualifying Service, the Telephone Company will calculate the Upgrade Adjustment (i.e., an adjusted number of Equivalent DS1 CTs for the Qualifying Services that were Upgraded (in accordance with (a) following), and an adjusted number of Equivalent DS1 CMs for the Qualifying Services that were Upgraded (in accordance with (b) following). The Telephone Company shall use such Upgrade Adjustments in (i) the calculation of Step 2 of the Monthly Average Count of Equivalent DS1 CTs and the Monthly Average Count of Equivalent DS1 CMs, respectively, as set forth in Section 23.1.7(B)(1) preceding; (ii) Section 23.1.7(F) for assigning Discount Tiers for the next Plan Year; and (iii) Section 23.1.7(E) to set the new Commitment Level(s) when the NDP Customer elects the Commitment Buy-Up Option.

(a) The Upgrade Adjustment of Equivalent DS1 CTs is calculated as follows.

(1) Using the table in Section 23.1.4(A)(1) preceding, determine the number of Equivalent DS1 CTs associated with the Qualifying Service(s) that were Upgraded to a non-Qualifying Service as calculated in accordance with Section 23.1.4(A).

(2) Determine the number of whole calendar months remaining in the Annual True-Up Period following the month in which the Upgrade occurred through the end of the Annual True-Up Period. For example, if the Upgrade occurred in June, and the Annual True-Up Period ended in November, then the number of whole months remaining in the Annual True-Up Period was five (5) months; and

(3) Determine the Upgrade Adjustment of Equivalent DS1 CTs by multiplying (a) the result of (1) above; by (b) the result of (2) above. The Telephone Company shall use such Upgrade Adjustments in the calculation of Step 2 of the Monthly Average Count of Equivalent DS1 CTs, as set forth in Section 23.1.7(B)(1) preceding.

Service availability is limited. See # footnote on Page 23-1.

© 2022 Frontier Communications Parent, Inc. All rights reserved.

23. Discount Plans (Cont'd)

23.1 National Discount Plan # (Cont'd)

23.1.7 Annual True-Up (Cont'd)

(H) Upgrades (Cont'd)

(4) (Cont'd)

(a) (cont'd)

As an example, assume the NDP Customer Upgraded two (2) Special Access DS3 Services to a Telephone Company provided optical Service in the seventh (7th) month of the Annual True-Up Period. The Upgrade Adjustment of Equivalent DS1 CTs is calculated as follows:

(1) multiply the number of DS3 level Qualifying Services that were Upgraded by the corresponding DS1 CT Multiplier. [2 Special Access DS3 Services x 28 =56 Equivalent DS1 CTs]

(2) five (5) months remain in the Annual True-Up Period. [the Upgrade occurred in the 7th month of the Annual True-Up Period which is period of twelve(12) months]

(3) the Upgrade Adjustment used in the calculation set forth in Step 2(i) of Section 23.1.7(B)(1) preceding would be 280 Equivalent DS1s. [56 Equivalent DS1 CTs upgraded in (i) above multiplied by 5 months as determined in (2) above]. This number shall be used in Step 2(i) of the calculation of Monthly Average DS1 CTs as set forth in Section 23.1.7(B)(1) preceding.

(b) The Upgrade Adjustment of Equivalent DS1 CMs is calculated in the same manner as the Upgrade Adjustment of Equivalent DS1 CT specified in (H)(3)(a) preceding is calculated, except that such calculations shall use Equivalent DS1 CMs and DS1 CM multipliers. This number shall be used in Step 2(i) of the calculation of Monthly Average DS1 CMs as set forth in Section 23.1.7(B)(1) preceding.

Service availability is limited. See # footnote on Page 23-1.

© 2022 Frontier Communications Parent, Inc. All rights reserved.

23. Discount Plans (Cont'd)

23.1 National Discount Plan # (Cont'd)

23.1.8 Minimum Period

The minimum period, as set forth in Section 7.2.2 preceding, for any service associated with a Discounted Rate Element provided under the NDP is one year from the date that such service is installed. Minimum period charges, as calculated in Section 5.3.3 preceding, will be assessed if the NDP Customer does not maintain the service with Discounted Rate Elements under Section 23.1.5 preceding for at least the one year minimum period.

As an illustrative example, assume that the NDP Customer establishes a Special Access DS1 Service under a TPP on January 1, 2001. On June 1, 2007, the NDP Customer establishes the NDP. On November 1, 2007, the NDP Customer disconnects that Special Access DS1 Service that was originally installed on January 1, 2001. Since the service was installed on January 1, 2001, and the disconnection date was November 1, 2007, the minimum period under the NDP of one year has been met. Therefore, the NDP Customer is not required to pay any minimum period charges.

23.1.9 Changes to Basic Service and/or Base Rates

The Basic Service or Base Rates to which the discount percentages are applied under the NDP are subject to change. An increase in the Basic Service rate (used with Special Access DS1 Service only) or Base Rate (used with Special Access DS3 Service only) will result in an increase to the rates under the NDP for the applicable Special Access DS1 Service and Special Access DS3 Services. A decrease in the Basic Service rate or Base Rate will result in a decrease to the rates under the NDP for the applicable Qualifying Service.

Service availability is limited. See # footnote on Page 23-1.

© 2022 Frontier Communications Parent, Inc. All rights reserved.

23. Discount Plans (Cont'd)

23.1 National Discount Plan # (Cont'd)

23.1.10 Sale of a Telephone Company Operating Territory

(A) In the event of a Telephone Company Sale during a Plan Year, the following applies:

(1) The Telephone Company will determine and record the actual number of Equivalent DS1 CTs and the actual number of Equivalent DS1 CMs affected by the Telephone Company Sale; and

(2) If a Telephone Company Sale occurs during the Initial Term, or a Renewal Term, the Telephone Company will calculate the Sale Adjustment (i.e., an adjusted amount of Equivalent DS1 CTs which are no longer provided to the NDP Customer as a result of the Telephone Company Sale, and/or an adjusted amount of Equivalent DS1 CMs which are no longer provided to the NDP Customer as a result of the Telephone Company Sale, as applicable). The Telephone Company shall use both of such Sale Adjustments in the Annual True-Up for the balance of the Initial Term or the Renewal Term, as applicable. Specifically, during the Annual True-Up, the Telephone Company shall use both of such Sale Adjustments in (i) the calculation of Step 2(ii) of the Monthly Average Count of Equivalent DS1 CTs and the Monthly Average Count of Equivalent DS1 CMs, respectively, as set forth in Section 23.1.7(B)(1) preceding, either during the Initial Term or the Renewal Term; (ii) Section 23.1.7(F) preceding for assigning Discount Tiers for the next Plan Year; and (iii) Section 23.1.7(E) preceding to set the new Commitment Level(s) when the NDP Customer elects the Commitment Buy-Up Option.

Service availability is limited. See # footnote on Page 23-1.

© 2022 Frontier Communications Parent, Inc. All rights reserved.

23. Discount Plans (Cont'd)

23.1 National Discount Plan # (Cont'd)

23.1.10 Sale of a Telephone Company Operating Territory (Cont'd)

(A) (Cont'd)

(2) (Cont'd)

(a) When calculating the Monthly Average Count of Equivalent DS1 CTs under Section 23.1.7(B)(1) preceding, the Telephone Company will calculate the Sale Adjustment of Equivalent DS1 CTs (as used in Step 2(ii) of Section 23.1.7(B)(1) preceding) for each Qualifying Service included in the Telephone Company Sale.

The Sale Adjustment of Equivalent DS1 CTs is calculated as follows:

(i) Using the table in Section 23.1.4(A)(1) preceding, determine the number of Equivalent DS1 CTs associated with the Qualifying Service(s) that were sold as calculated in accordance with Section 23.1.4(A)(1) preceding.

(ii) Determine the number of whole calendar months remaining in the Annual True-Up Period following the month in which the Telephone Company Sale occurred through the end of the Annual True-Up Period. For example, if the Telephone Company Sale occurred in April, and the Annual True-Up Period ended in August, then the number of whole months remaining in the Annual True-Up Period was four (4) months; and

(iii) Determine the Sale Adjustment of Equivalent DS1 CTs by multiplying (a) the result of (i) above; by (b) the result of (ii) above. The Telephone Company shall use such Sale Adjustment(s) in the calculation of Step 2(ii) of the Monthly Average Count of Equivalent DS1 CTs as set forth in Section 23.1.7(B)(1) preceding.

(b) The Sale Adjustment of Equivalent DS1 CMs is calculated in the same manner as the Sale Adjustment of Equivalent DS1 CTs is calculated in (a) above, except that such calculations shall use Equivalent DS1 CMs and DS1 CM Multipliers instead of Equivalent DS1 CTs and DS1 CT Multipliers.

Service availability is limited. See # footnote on Page 23-1.

© 2022 Frontier Communications Parent, Inc. All rights reserved.

23. Discount Plans (Cont'd)

23.1 National Discount Plan # (Cont'd)

23.1.11 Addition of an ACNA(s) to an Existing NDP

(A) One of the following two (2) options must be chosen by the NDP Customer when adding one or more ACNA(s) to its NDP:

(1) If an NDP Customer adds one or more ACNA(s) to its NDP (as permitted under Section 23.1.1(C) preceding), and such ACNA(s) is/are not already included in a different NDP, then the NDP Customer must include such ACNA(s) in its NDP in accordance with the terms of Section 23.1.11(B)(1) following; or

(2) If an NDP Customer adds one or more ACNA(s) to its NDP (as permitted under Section 23.1.1(C) preceding), and such ACNA(s) is/are already included in another NDP, then the NDP Customer must include such ACNA(s) in its NDP in accordance with the terms of Section 23.1.11(B)(2) following.

The terms of Section 23.1.1(C) preceding apply in addition to any requirements set forth herein.

(B) No later than thirty (30) calendar days prior to each Anniversary Date of the NDP, the NDP Customer must provide the Telephone Company with a list of the any ACNAs that the NDP Customer acquired (as defined in (A) above) during the Annual True-Up Period. Whether the acquired ACNA(s) is/are already included in an NDP shall determine whether (i) the NDP Customer's NDP is augmented to include such acquired ACNA(s); (ii) the NDP Customer's NDP is combined with the NDP associated with the acquired ACNA(s); or (iii) a new NDP is established that includes the NDP Customer existing ACNA(s) and the acquired ACNAs.

Service availability is limited. See # footnote on Page 23-1.

© 2022 Frontier Communications Parent, Inc. All rights reserved.

23. Discount Plans (Cont'd)

23.1 National Discount Plan # (Cont'd)

23.1.11 Addition of an ACNA(s) to an Existing NDP (Cont'd)

(B) (Cont'd)

(1) Augment of Existing NDP to Include the Added ACNA(s)

Where an NDP Customer seeks to add one or more ACNA(s) to its NDP in accordance with Section 23.1.11(A)(1) preceding (i.e., such ACNA(s) is/are not already included in another NDP), the NDP Customer's NDP shall be augmented to include the quantities of the Qualifying Services of such added ACNAs.

(a) At the next Annual True-Up following the effective date of the NDP Customer acquiring the additional ACNA(s), the Telephone Company will complete Steps (A)(1) through (A)(5) of the Annual True-Up as described in Section 23.1.7(A) preceding as if the NDP Customer had not acquired the additional ACNA(s).

(b) Upon completion of Section 23.1.7(A)(1) through (A)(5) preceding, and in accordance with Section 23.1.1(C) preceding, the acquired ACNA(s) will be added to the NDP and all of the following shall occur:

(1) Adjust Commitment Levels

The Telephone Company will adjust Commitment Levels of the NDP to include the Qualifying Services of the acquired ACNA(s) as follows:

Service availability is limited. See # footnote on Page 23-1.

© 2022 Frontier Communications Parent, Inc. All rights reserved.

23. Discount Plans (Cont'd)

23.1 National Discount Plan # (Cont'd)

23.1.11 Addition of an ACNA(s) to an Existing NDP (Cont'd)

(B) (Cont'd)

(1) (Cont'd)

(b) (Cont'd)

(1) Adjust Commitment Levels (Cont'd)

(Step 1) Using the table in Section 23.1.4(A)(1) preceding, and the actual quantities of Channel Terminations for the acquired ACNA(s) in month twelve (12) of the Annual True-Up Period (even though such Channel Terminations of the acquired ACNA(s) were not used in the Annual True-Up), determine the number of Equivalent DS1 CTs associated with the Qualifying Service(s) of the acquired ACNA(s) by multiplying (a) the level for the Qualifying Service (e.g., DS3 level); by (b) the DS1 CT multiplier using the table set forth in Section 23.1.4(A)(1) preceding.

The Telephone Company will determine the number of Equivalent DS1 CMs for the acquired ACNA(s) in the same manner as the number of Equivalent DS1 CTs was developed in the preceding paragraph.

(Step 2) The Telephone Company will calculate a CT Commitment Level for the acquired ACNA(s) by multiplying the result in Step 1 above by eighty-five percent (85%) if the NDP Customer has the Standard Commitment Matrix, by ninety percent (90%) if the NDP Customer has the Premier Commitment Matrix, or by ninety-two percent (92%) if the NDP Customer has the Deluxe Commitment Matrix.

The Telephone Company will develop a CM Commitment Level for the acquired ACNA(s) in the same manner as the CT Commitment Level was developed in the preceding paragraph.

Service availability is limited. See # footnote on Page 23-1.

© 2022 Frontier Communications Parent, Inc. All rights reserved.

23. Discount Plans (Cont'd)

23.1 National Discount Plan # (Cont'd)

23.1.11 Addition of an ACNA(s) to an Existing NDP (Cont'd)

(B) (Cont'd)

(1) (Cont'd)

(b) (Cont'd)

(1) Adjust Commitment Levels (Cont'd)

(Step 3) The Telephone Company will add the CT Commitment Level for the acquired ACNA(s) determined in Step 2 above to the CT Commitment Level for the NDP (which such CT Commitment Level may have already been revised in accordance with Section 23.1.7(B) or Section 23.1.7(E) preceding, of the Annual True-Up), the result of which will be the adjusted CT Commitment Level for the remainder of the Term unless otherwise adjusted in this Section 23.1. Any prior CT Commitment level established under Section 23.1.7(B) or Section 23.1.7(E) preceding is expressly superseded by the CT Commitment Level established under this Step 3.

The Telephone Company will add the CM Commitment Level for the acquired ACNA(s) determined in Step 2 above to the CM Commitment Level for the NDP, the result of which will be the adjusted CM Commitment Level for the remainder of the Term unless otherwise adjusted in this Section 23.1. Any prior CM Commitment level established under Section 23.1.7(B) or Section 23.1.7(E) preceding is expressly superseded by the CM Commitment Level established under this Step 3.

Service availability is limited. See # footnote on Page 23-1.

© 2022 Frontier Communications Parent, Inc. All rights reserved.

23. Discount Plans (Cont'd)

23.1 National Discount Plan # (Cont'd)

23.1.11 Addition of an ACNA(s) to an Existing NDP (Cont'd)

(B) (Cont'd)

(1) (Cont'd)

(b) (Cont'd)

(1) Adjust Commitment Levels (Cont'd)

As an example, assume the NDP Customer's CT Commitment Level is 10,000 Equivalent DS1 CTs. Further assume that the NDP Customer acquired one ACNA with Qualifying Services in month twelve (12) of the Annual True-Up Period in the following quantities (a) nine (9) Special Access DS3 Services; and (b) two thousand (2000) Special Access DS1 Services. The adjustment to the CT Commitment Level is calculated as:

(Step 1) determine the quantity of Equivalent DS1 CTs for the acquired ACNA(s) by multiplying

(i) the number of DS3 level Qualifying Services for the acquired ACNA(s); by

(ii) the corresponding DS3 CT Multiplier [9 Special Access DS3 Services x 28 =252 Equivalent DS1 CTs].

(iii) Then, multiply the number of DS1 level Qualifying Services for the acquired ACNA(s); by

(iv) the corresponding DS1 CT Multiplier [2000 Special Access DS1 Services x 1 = 2000 Equivalent DS1 CTs].

(v) add the result of (ii) and (iv) above [252 for DS3 Level + 2000 for DS1 Level = 2352 Equivalent DS1 CTs].

Service availability is limited. See # footnote on Page 23-1.

© 2022 Frontier Communications Parent, Inc. All rights reserved.

23. Discount Plans (Cont'd)

23.1 National Discount Plan # (Cont'd)

23.1.11 Addition of an ACNA(s) to an Existing NDP (Cont'd)

(B) (Cont'd)

(1) (Cont'd)

(b) (Cont'd)

(1) Adjust Commitment Levels (Cont'd)

Example (Cont'd)

(Step 2) Calculate the increase to the CT Commitment Level by multiplying the result in Step 1 above by eighty-five percent (85%) for the Standard Commitment Matrix, by ninety percent (90%) for the Premier Commitment Matrix, or by ninety-two percent (92%) for the Deluxe Commitment Matrix. In this example, assume the NDP Customer has Premier Commitment Matrix [2352 Equivalent DS1 CTs for the acquired ACNA x 90% Commitment for Premier Commitment Matrix = 2027 Equivalent DS1 CTs (i.e., the Commitment Level for the acquired ACNA)].

(Step 3) Add the CT Commitment Level for the acquired ACNA determined in Step 2 above to the CT Commitment Level for the remaining portion of the NDP (which such CT Commitment Level may have already been revised in accordance with Section 23.1.7(B) and Section 23.1.7(E) preceding, of the Annual True-Up) (assumed to be 10,000 Equivalent DS1 CTs in this example) to determine the revised CT Commitment Level for the remainder of the Term unless otherwise changed in this Section 23.1. [10,000 Equivalent DS1 CTs for the existing CT Commitment Level + 2027 Equivalent DS1 CTs for the CT Commitment Level of the acquired ACNAs = a revised CT Commitment Level for the NDP of 12,027 Equivalent DS1 CTs]. Any prior CT Commitment level established under Section 23.1.7(B) and Section 23.1.7(E) preceding is expressly superseded by the CT Commitment Level established under this Step 3.

Service availability is limited. See # footnote on Page 23-1.

© 2022 Frontier Communications Parent, Inc. All rights reserved.

23. Discount Plans (Cont'd)

23.1 National Discount Plan # (Cont'd)

23.1.11 Addition of an ACNA(s) to an Existing NDP (Cont'd)

(B) (Cont'd)

(1) (Cont'd)

(b) (Cont'd)

(1) Adjust Commitment Levels (Cont'd)

Example (Cont'd)

(Step 3) (Cont'd)

A revised CM Commitment Level for the NDP would be calculated in the same manner as the revised CT Commitment Level for the NDP was calculated, except that such calculations shall use quantities of Equivalent DS1 CMs and the DS1 CM Multiplier. Any prior CM Commitment level established under Section 23.1.7(B) or Section 23.1.7(E) preceding is expressly superseded by the CM Commitment Level established under this Step 3.

(2) Assign the Discount Tiers for the Next Plan Year

Using the combined quantities for the Qualifying Services of the existing ACNAs and the acquired ACNAs in month twelve (12) of the Annual True-Up Period, the Telephone Company will assign the Discount Tiers applicable to the next Plan Year in accordance with Section 23.1.7(F) preceding.

Service availability is limited. See # footnote on Page 23-1.

© 2022 Frontier Communications Parent, Inc. All rights reserved.

23. Discount Plans (Cont'd)

23.1 National Discount Plan # (Cont'd)

23.1.11 Addition of an ACNA(s) to an Existing NDP (Cont'd)

(B) (Cont'd)

(2) Combine NDPs

(a) Where an NDP Customer seeks to add one or more ACNA(s) to its NDP in accordance with Section 23.1.11(A)(2) preceding (i.e., such ACNA(s) is/are already included in another NDP), the NDP Customer who wishes to add the ACNA(s) to its NDP has the following options to combine the NDPs involved:

(1) Surviving NDP Option

Combine the NDP for the existing ACNA(s) with the NDP of the added ACNA(s) into a Surviving NDP as set forth in (B)(2)(b) following; or

(2) New NDP Option

Establish a new NDP that combines the existing ACNA(s) and the acquired ACNA(s) as set forth in (B)(2)(c) following.

(b) Surviving NDP Option

This option combines the NDP of the existing ACNAs (Plan A) with the NDP of the acquired ACNAs (Plan B). The Telephone Company will determine whether Plan A or Plan B has the greatest Monthly Charges in the month before the NDPs are combined, and such NDP will be deemed the Surviving NDP. The Surviving NDP shall be augmented to add the acquired ACNAs to the ACNAs of the Surviving NDP.

Service availability is limited. See # footnote on Page 23-1.

© 2022 Frontier Communications Parent, Inc. All rights reserved.

23. Discount Plans (Cont'd)

23.1 National Discount Plan # (Cont'd)

23.1.11 Addition of an ACNA(s) to an Existing NDP (Cont'd)

(B) (Cont'd)

(2) Combine NDPs (Cont'd)

(b) Surviving NDP Option (Cont'd)

(1) At the next scheduled Annual True-Up for the Surviving NDP following the effective date of the NDP Customer acquiring the ACNA(s), the Telephone Company will complete Steps (A)(1) through (A)(5) of the Annual True-Up as described in Section 23.1.7(A) preceding for Plan A and separately complete Steps (A)(1) through (A)(5) of the Annual True-Up as described in Section 23.1.7(A) preceding for Plan B. Each Annual True-Up will be conducted as if the NDPs had not been combined. The Telephone Company will conduct the Final True-Up for the non-Surviving NDP using the number of months available at the time the Final True-Up is conducted. The non-Surviving NDP shall be cancelled upon completion of such Final True-Up. Termination liability under Section 23.1.13 following will not apply to such cancellation.

(2) Once the Annual True-Ups under (B)(2)(b)(1) preceding are complete, and in accordance with Section 23.1.1(C) preceding, the ACNAs, Qualifying Services and Commitment Levels of the non-Surviving NDP will be added to the ACNAs, Qualifying Services and Commitment Levels of the Surviving NDP as follows:

(a) If the Surviving NDP used a Standard Commitment Matrix, the Standard Commitment Matrix will continue to apply to the combined plan. If the Surviving NDP used a Premier Commitment Matrix, the Premier Commitment Matrix will continue to apply to the combined plan. If the Surviving NDP used a Deluxe Commitment Matrix, the Deluxe Commitment Matrix will continue to apply to the combined plan; and

Service availability is limited. See # footnote on Page 23-1.

© 2022 Frontier Communications Parent, Inc. All rights reserved.

23. Discount Plans (Cont'd)

23.1 National Discount Plan # (Cont'd)

23.1.11 Addition of an ACNA(s) to an Existing NDP (Cont'd)

(B) (Cont'd)

(2) Combine NDPs (Cont'd)

(b) Surviving NDP Option (Cont'd)

(2) (Cont'd)

(b) Commitment Levels and Discount Tiers will be adjusted as follows; and

(i) Adjust Commitment Levels

The Telephone Company will adjust Commitment Levels of the Surviving NDP to include the Qualifying Services of the non-Surviving NDP as follows:

(Step 1) Using the table in Section 23.1.4(A)(1) preceding, and the actual quantities of Channel Terminations for the month prior to conducting the Final True-Up for the non-Surviving NDP, determine the number of Equivalent DS1 CTs associated with the Qualifying Service(s) of the acquired ACNA(s) by multiplying (a) the level for the Qualifying Service (e.g., DS3 level); by (b) the DS1 CT multiplier in accordance with the table in Section 23.1.4(A)(1) preceding.

The Telephone Company will determine the number of Equivalent DS1 CMs for the acquired ACNA(s) in the same manner as the number of Equivalent DS1 CTs was developed in the preceding paragraph in accordance with the table in Section 23.1.4(A)(2) preceding.

Service availability is limited. See # footnote on Page 23-1.

© 2022 Frontier Communications Parent, Inc. All rights reserved.

23. Discount Plans (Cont'd)

23.1 National Discount Plan # (Cont'd)

23.1.11 Addition of an ACNA(s) to an Existing NDP (Cont'd)

(B) (Cont'd)

(2) Combine NDPs (Cont'd)

(b) Surviving NDP Option (Cont'd)

(2) (Cont'd)

(b) (Cont'd)

(i) Adjust Commitment Levels (Cont'd)

(Step 2) The Telephone Company will develop a CT Commitment Level for the acquired ACNA(s) of the non-Surviving NDP by multiplying the result in Step 1 above by eighty-five percent (85%) if the Surviving NDP uses the Standard Commitment Matrix, by ninety percent (90%) if the Surviving NDP uses the Premier Commitment Matrix or by ninety-two percent (92%) if the Surviving NDP uses the Deluxe Commitment Matrix.

The Telephone Company will develop a CM Commitment Level for the acquired ACNA(s) of the non-Surviving NDP in the same manner as the CT Commitment Level was developed in the preceding paragraph.

Service availability is limited. See # footnote on Page 23-1.

© 2022 Frontier Communications Parent, Inc. All rights reserved.

23. Discount Plans (Cont'd)

23.1 National Discount Plan # (Cont'd)

23.1.11 Addition of an ACNA(s) to an Existing NDP (Cont'd)

(B) (Cont'd)

(2) Combine NDPs (Cont'd)

(b) Surviving NDP Option (Cont'd)

(2) (Cont'd)

(b) (Cont'd)

(i) Adjust Commitment Levels (Cont'd)

(Step 3) The Telephone Company will add the CT Commitment Level for the acquired ACNA(s) determined in Step 2 above to the CT Commitment Level for the remaining portion of the Surviving NDP, the result of which will be the adjusted CT Commitment Level for the remainder of the Term unless otherwise adjusted in this Section 23.1.

The Telephone Company will add the CM Commitment Level for the acquired ACNA(s) determined in Step 2 above to the CM Commitment Level for the remaining portion of the Surviving NDP, the result of which will be the adjusted CM Commitment Level for the remainder of the Term unless otherwise adjusted in this Section 23.1.

(ii) The Plan Year for the Surviving NDP is the next scheduled Plan Year for that NDP prior to combining plans. For example, if the Surviving NDP was in Plan Year 2 prior to the NDPs being combined, the Surviving NDP will be in Plan Year 3 after the NDPs are combined.

Service availability is limited. See # footnote on Page 23-1.

© 2022 Frontier Communications Parent, Inc. All rights reserved.

23. Discount Plans (Cont'd)

23.1 National Discount Plan # (Cont'd)

23.1.11 Addition of an ACNA(s) to an Existing NDP (Cont'd)

(B) (Cont'd)

(2) Combine NDPs (Cont'd)

(b) Surviving NDP Option (Cont'd)

(2) (Cont'd)

(c) Assign Discount Tiers for the Next Plan Year

Using the combined quantities for the Qualifying Services of the existing ACNAs and the acquired ACNAs in month twelve (12) of the Annual True-Up Period, the Telephone Company will assign the Discount Tier applicable to the Surviving NDP for the next Plan Year in accordance with Section 23.1.7(F) preceding.

Service availability is limited. See # footnote on Page 23-1.

© 2022 Frontier Communications Parent, Inc. All rights reserved.

23. Discount Plans (Cont'd)

23.1 National Discount Plan # (Cont'd)

23.1.11 Addition of an ACNA(s) to an Existing NDP (Cont'd)

(B) (Cont'd)

(2) Combine NDPs (Cont'd)

(c) New NDP Option

This option combines the NDP of the existing ACNAs (Plan A) with the NDP of the acquired ACNAs (Plan B) into a new NDP (Plan C) that includes the ACNAs of Plan A and Plan B.

(1) At the first Annual True-Up for either Plan A or Plan B following the effective date of the NDP Customer acquiring the ACNA(s), the Telephone Company will complete Steps (A)(1) through (A)(5) of the Annual True-Up as described in Section 23.1.7(A) preceding for Plan A and separately complete Steps (A)(1) through (A)(5) of the Annual True-Up as described in Section 23.1.7(A) preceding for Plan B. Each Annual True-Up will be conducted as if the NDPs had not been combined. The Telephone Company will conduct a Final True-Up on Plan A, and a separate Final True-Up on Plan B using the number of months available at the time the Final True-Up is conducted. Upon completion of the Final True-Up for each plan, Plan A and Plan B shall both be cancelled without the application of termination liability under Section 23.1.13 following.

(2) The new NDP shall be established using the quantities of Qualifying Services for the ACNAs of Plan A and Plan B as determined in the Final True-Up for each plan, and shall be established and maintained in accordance with the requirements of this Section 23.1.

Service availability is limited. See # footnote on Page 23-1.

© 2022 Frontier Communications Parent, Inc. All rights reserved.

23. Discount Plans (Cont'd)

23.1 National Discount Plan # (Cont'd)

23.1.12 Removal of an ACNA(s) as a Result of a Customer Sale

(A) A Customer Sale is the consummation of a sale, divestiture, spin-off, or other transaction which results in the NDP Customer no longer having any (i.e., 0%) control (including any stock or assets) in a Person that is (at the time of the Customer Sale) included within the NDP Customer's NDP. As used in this definition, the term "control" means the possession, directly or indirectly, of the power to direct or cause the direction of the management and policies of a Person, whether through ownership or voting securities, by contract or otherwise.

(1) When an NDP Customer is subject to a Customer Sale, and seeks to remove one or more ACNA(s) from its NDP, the terms of Section (A)(2) following shall apply, and the Telephone Company shall automatically at the next Annual True-Up modify the existing NDP by removing the affected ACNAs and the Qualifying Services associated with the affected ACNA(s). No later than thirty (30) calendar days prior to the Anniversary Date, the NDP Customer must provide a written notice with supporting documentation that describes the Customer Sale, and the ACNAs impacted by such Customer Sale.

If the NDP Customer sells, divests, spins off, or otherwise reduces its control (including any stock or assets) in a Person that is (at the time of the applicable sale transaction) included within the NDP Customer's NDP, but the NDP Customer still retains some control (i.e., greater than 0%) in the affected Person(s), then all of the ACNA(s) of such Person(s) shall continue to be included in the NDP Customer's NDP, in accordance with the terms of Section 23.1.1(C) preceding. As used in this paragraph, the term "control" means the possession, directly or indirectly, of the power to direct or cause the direction of the management and policies of a Person, whether through ownership or voting securities, by contract or otherwise.

Service availability is limited. See # footnote on Page 23-1.

© 2022 Frontier Communications Parent, Inc. All rights reserved.

23. Discount Plans (Cont'd)

23.1 National Discount Plan # (Cont'd)

23.1.12 Removal of an ACNA(s) as a Result of a Customer Sale (Cont'd)

(A) (Cont'd)

(2) If the NDP Customer has removed an ACNA(s), the Telephone Company shall take the following actions:

(a) At the next Annual True-Up following the effective date of removal of the ACNA(s), the Telephone Company will complete Steps (A)(1) through (A)(5) of the Annual True-Up as described in Section 23.1.7(A) preceding as if the ACNA(s) has not been removed.

(b) Once the Annual True-Up under (2)(a) preceding is complete, the Telephone Company will modify the NDP as follows:

(i) Reduce Commitment Levels

The CT Commitment Level and CM Commitment Level will be reduced by (i) eighty-five percent (85%) of Equivalent DS1 CTs or Equivalent DS1 CMs, as applicable, in month twelve (12) of the Annual True-Up that were associated with the removed ACNA(s) if the NDP uses Standard Commitment Matrix; or (ii) ninety percent (90%) of Equivalent DS1 CTs or Equivalent DS1 CMs, as applicable, in month twelve (12) of the Annual True-Up that were associated with the removed ACNA(s) if the NDP uses Premier Commitment Matrix; or (iii) ninety-two percent (92%) of Equivalent DS1 CTs or Equivalent DS1 CMs, as applicable, in month twelve (12) of the Annual True-Up that were associated with the removed ACNA(s) if the NDP uses Deluxe Commitment Matrix as follows:

(Step 1) Using the table in Section 23.1.4(A)(1) preceding, determine the number of Equivalent DS1 CTs associated with the Qualifying Service(s) of the Customer Sale as calculated in accordance with Section 23.1.4(A) preceding.

The Telephone Company will determine the number of Equivalent DS1 CMs for the removed ACNA(s) in the same manner as the number of Equivalent DS1 CTs was developed in the preceding paragraph.

Service availability is limited. See # footnote on Page 23-1.

© 2022 Frontier Communications Parent, Inc. All rights reserved.

23. Discount Plans (Cont'd)

23.1 National Discount Plan # (Cont'd)

23.1.12 Removal of an ACNA(s) as a Result of a Customer Sale (Cont'd)

(A) (Cont'd)

(2) (Cont'd)

(b) (Cont'd)

(i) Reduce Commitment Levels (Cont'd)

(Step 2) The Telephone Company will develop a CT Commitment Level for the removed ACNA(s) by multiplying the result in Step 1 above by eighty-five percent (85%) if the NDP uses the Standard Commitment Matrix, by ninety percent (90%) if the NDP uses the Premier Commitment Matrix, or by ninety-two percent (92%) if the NDP uses the Deluxe Commitment Matrix.

The Telephone Company will develop a CM Commitment Level for the removed ACNA(s) of the NDP in the same manner as the CT Commitment Level was developed in the preceding paragraph.

(Step 3) The Telephone Company will subtract the CT Commitment Level for the removed ACNA(s) determined in Step 2 above from the CT Commitment Level for the remaining portion of the NDP, the result of which will be the adjusted CT Commitment Level for the remainder of the Initial Term or Renewal term, as applicable, unless otherwise adjusted in this Section 23.1.

The Telephone Company will subtract the CM Commitment Level for the removed ACNA(s) determined in Step 2 above from the CM Commitment Level of the Initial Term or Renewal term, as applicable, the result of which will be the adjusted CM Commitment Level for the remainder of the Term unless otherwise adjusted in this Section 23.1.

Service availability is limited. See # footnote on Page 23-1.

© 2022 Frontier Communications Parent, Inc. All rights reserved.

23. Discount Plans (Cont'd)

23.1 National Discount Plan # (Cont'd)

23.1.12 Removal of an ACNA(s) as a Result of a Customer Sale (Cont'd)

(A) (Cont'd)

(2) (Cont'd)

(c) Assign Discount Tiers for the Next Plan Year

Using the reduced quantities for the Qualifying Services of the remaining ACNAs in month twelve (12) of the Annual True-Up Period, the Telephone Company will assign the Discount Tier applicable to the NDP for the next Plan Year in accordance with Section 23.1.7(F) preceding.

(d) Termination Liability under Section 23.1.13 following will not apply for removal of the Qualifying Services from the NDP that are affected by the removal of an ACNA.

23.1.13 Termination Liability

(A) If the NDP is terminated prior to the end of the Initial Term or during the Renewal Term (subject to certain conditions as described in Section 23.1.14 following), termination liability applies to all Qualifying Services.

(B) The termination liability charge applies in addition to any applicable minimum period charges as set forth in Section 23.1.8 preceding.

Service availability is limited. See # footnote on Page 23-1.

© 2022 Frontier Communications Parent, Inc. All rights reserved.

23. Discount Plans (Cont'd)

23.1 National Discount Plan # (Cont'd)

23.1.13 Termination Liability (Cont'd)

(C) The applicable termination liability during the Initial Term or Renewal Term, as applicable, as set forth below shall be based on the Plan Year in which the NDP Customer terminates the NDP.

Plan Year	Termination Liability
1	100% of the monthly recurring charges for all Discounted Rate Elements for the remainder of Plan Year 1 and 50% of the monthly charges for the remaining 4 years.
2	50% of the monthly recurring charges for all Discounted Rate Elements for the remainder of Plan Year 2 and 50% of the monthly charges for the remaining 3 years.
3	25% of the monthly recurring charges for all Discounted Rate Elements for the remainder of Plan Year 3 and 25% of the monthly charges for the remaining 2 years.
4	15% of the monthly recurring charges for all Discounted Rate Elements for the remainder of Plan Year 4 and 15% of the monthly charges for the remaining year. If the NDP Customer has selected the Renewal Benefit Option as described in Section 23.1.14(C) following, termination liability during Plan Year 4 does not apply after month 42 of the Renewal Term.
5	10% of the monthly recurring charges for all Discounted Rate Elements for the remainder of Plan Year 5. If the NDP Customer has selected the Renewal Benefit Option as described in Section 23.1.14(C) following, termination liability during Plan Year 5 does not apply during the Renewal Term.

Service availability is limited. See # footnote on Page 23-1.

© 2022 Frontier Communications Parent, Inc. All rights reserved.

23. Discount Plans (Cont'd)

23.1 National Discount Plan # (Cont'd)

23.1.14 Renewal and Termination of NDP

(A) Description

No later than sixty (60) calendar days prior to expiration of the Initial Term or Renewal Term, as applicable, of the NDP, the NDP Customer must provide the Telephone Company with written notice of its election of one of the following options.

(1) Renew its NDP for a 5-year Renewal Term as described in this Section 23.1.14 including providing written election of its subscription to the Renewal Benefit Option as set forth in Section 23.1.14(C) following; or

(2) subscribe the Qualifying Services of the expiring NDP to any then effective discount plan, term plan or Contract Tariff Option for which the NDP Customer is eligible; or

(3) continue with service on a month-to-month basis without any discount or term plan; or

(4) discontinue service for all Qualifying Services without the application of termination liability as set forth in Section 23.1.13 preceding.

Service availability is limited. See # footnote on Page 23-1.

© 2022 Frontier Communications Parent, Inc. All rights reserved.

23. Discount Plans (Cont'd)

23.1 National Discount Plan # (Cont'd)

23.1.14 Renewal and Termination of NDP (Cont'd)

(B) Renewal

The NDP Customer's election to renew its NDP for another Renewal Term under Section 23.1.14(A)(1) preceding must be provided in writing and must be received by the Telephone Company no later than 60 calendar days prior to expiration of the Term. If the NDP Customer does not provide the Telephone Company with written notice (including providing timely notice) of its election under Section 23.1.14(A) preceding, and subject to the following requirements, the expiring NDP shall automatically renew for a 5-year Renewal Term at the end of the Initial Term or Renewal Term, as applicable.

(1) The Telephone Company will conduct the Annual True-Up for Plan Year 5 in accordance with Section 23.1.7 preceding (Final True-Up), except that such Final True-Up shall not include the following:

(a) The Commitment Buy-Up option as set forth in Section 23.1.7(E) preceding; and

(b) The Telephone Company will not assign Discount Tiers for the expiring NDP since the NDP has just completed its last Plan Year of the Initial Term or Renewal Term, as applicable; and

(c) Subject to Section 23.1.14(C) following, where the NDP Customer provides timely notice of its election under Section 23.1.14(A) preceding, the NDP Customer may change the Commitment Matrix to any available Commitment Matrix option.

Service availability is limited. See # footnote on Page 23-1.

© 2022 Frontier Communications Parent, Inc. All rights reserved.

23. Discount Plans (Cont'd)

23.1 National Discount Plan # (Cont'd)

23.1.14 Renewal and Termination of NDP (Cont'd)

(B) Renewal (Cont'd)

(2) The Telephone Company shall establish the renewed NDP using the quantities of Qualifying Services for all of the NDP Customer's ACNAs (including any ACNAs associated with any Person(s) that are included in the NDP Customer's NDP, as determined in Section 23.1.1(C) preceding). The renewed NDP shall be established and maintained in accordance with the requirements of this Section 23.1 and shall be subject to the following conditions:

(a) A Renewal Term of five (5) years; and

(b) All Qualifying Services that the NDP Customer subscribed to in month twelve (12) of Plan Year 5 of the expiring Initial Term or a Renewal Term, as applicable, must be included in the Renewed NDP; and

(c) The NDP Customer must specify a Commitment Matrix Option for the Renewal Term from those offered under Section 23.1.4(C) preceding, except where the NDP Customer selects the Renewal Benefit Option under Section 23.1.14(C) following, in which case the NDP Customer must select either the Premier Commitment Matrix or the Deluxe Commitment Matrix; and

Service availability is limited. See # footnote on Page 23-1.

© 2022 Frontier Communications Parent, Inc. All rights reserved.

23. Discount Plans (Cont'd)

23.1 National Discount Plan # (Cont'd)

23.1.14 Renewal and Termination of NDP (Cont'd)

(B) Renewal (Cont'd)

(2) (Cont'd)

(d) The Telephone Company will develop the CT Commitment Level for the Renewal Term using the actual number of Equivalent DS1 CTs for Qualifying Services that were subscribed to in month twelve (12) of Plan Year 5 of the expiring Initial Term or the Renewal Term, as applicable. If the Renewal Benefit Option under Section 23.1.14(C) following is selected, the CT Commitment Level of the new NDP must be equal to or greater than the CT Commitment Level for the expiring NDP. The calculation shall be performed in accordance with Section 23.1.4 preceding; and

(e) The Telephone Company will develop the CM Commitment Level for the Renewal Term using the actual number of Equivalent DS1 CMs for Qualifying Services that were subscribed to in month twelve (12) of Plan Year 5 of the expiring Initial Term or the Renewal Term, as applicable. If the Renewal Benefit Option under Section 23.1.14(C) following is selected, the CM Commitment Level of the new NDP must be equal to or greater than the CM Commitment Level for the expiring NDP. The calculation shall be performed in accordance with Section 23.1.4 preceding; and

(f) New Discount Tiers will be assigned for the renewed NDP using the actual quantity of Equivalent DS1 CTs or actual quantity of Equivalent DS1 CMs, as applicable, that were subscribed to in month twelve (12) of Plan Year 5 of the expiring Plan; and

(g) The renewed NDP shall begin in Plan Year 1 but shall continue to receive the discounts associated with Plan Year 5 as set forth in Section 23.1.5(B) preceding.

Service availability is limited. See # footnote on Page 23-1.

© 2022 Frontier Communications Parent, Inc. All rights reserved.

23. Discount Plans (Cont'd)

23.1 National Discount Plan # (Cont'd)

23.1.14 Renewal and Termination of NDP (Cont'd)

(C) Renewal Benefit Option

(1) If the NDP Customer elects the Renewal Benefit Option, and makes such election in a timely manner as set forth in Section 23.1.14(A) preceding, the expiring NDP shall be renewed at the end of the expiring Initial Term or Renewal Term, as applicable, in accordance with the requirements of (B)(2) preceding. If the NDP Customer does not provide timely notice of its election to renew under Section 23.1.14 preceding, the NDP Customer is not eligible for the Renewal Benefit Option.

(2) When the Renewal Benefit Option is selected, termination liability under Section 23.1.13 preceding is only applicable for the first forty-two (42) months of the Renewal Term. Termination Liability is not applicable in month forty-three (43) through month sixty (60) of the Renewal Term (Renewal Benefit Period).

For example, assume the NDP Customer renews its NDP on November 1, 2012. In this case, the Renewal Term begins November 1, 2012 and ends October 31, 2017. If the NDP Customer were to terminate its NDP at any time after May 1, 2016 (i.e., during the Renewal Benefit Period which is after month forty-two (42) of the Renewal Term), termination liability as set forth in Section 23.1.13 preceding is not applicable.

For a second example, assume the NDP Customer renews its NDP on November 1, 2012. In this case, the Renewal Term begins November 1, 2012 and ends October 31, 2017. If the NDP Customer were to cancel its NDP at any time prior to May 1, 2016 (i.e., during the first forty-two (42) months of the Renewal Term), termination liability as set forth in Section 23.1.13 preceding applies.

Service availability is limited. See # footnote on Page 23-1.

© 2022 Frontier Communications Parent, Inc. All rights reserved.

23. Discount Plans (Cont'd)

23.1 National Discount Plan # (Cont'd)

23.1.14 Renewal and Termination of NDP (Cont'd)

(D) Cancellation or Termination During the Renewal Term

(1) When the NDP is cancelled or terminated during the Renewal Term, a Final True-Up will be conducted in order to determine any applicable Shortfall Penalty or Discount Tier Adjustments. The Shortfall Penalty and Discount Tier Adjustments will be calculated as specified in Section 23.1.7(C) and (D) preceding, respectively, on a pro-rated basis, for the number of months elapsed since the last Annual True-Up.

(2) If the NDP is cancelled or terminated during the Renewal Benefit Period as defined in Section 23.1.14(C)(2) preceding (i.e., during the period that begins with month 43 and ends with month 60 of the Renewal Term), the NDP Customer will be treated as if it had completed the full Renewal Term of five (5) years. At the NDP Customer's option, and at any time between month 43 and month 60 of the Renewal Term, the NDP Customer may once again renew its NDP. The NDP Customer may elect the Renewal Benefit Option for any subsequent Renewal Term.

(3) Except as otherwise specified in this Section 23.1.14, all terms and conditions of the NDP as set forth in this Section 23.1 shall apply.

Service availability is limited. See # footnote on Page 23-1.

© 2022 Frontier Communications Parent, Inc. All rights reserved.

24. RESERVED FOR FUTURE USE (Z)

© 2022 Frontier Communications Parent, Inc. All rights reserved.